CONTRACT C18219

MATHILDA AVE IMPROVEMENTS AT US 101 AND SR 237

Volume 3
Contract Drawings

PROJECT ADMINISTERED BY:

Conformed
December 24, 2018

Caltrans

Sunnyvale

Santa Clara Valley Transportation Authority
Solutions that move you

[This Page Intentionally Blank]

APPROVED AS TO IMPACT ON STATE FACILITIES AND CONFORMANCE WITH APPLICABLE STATE STANDARDS AND PRACTICES AND THAT TECHNICAL OVERSIGHT WAS PERFORMED.

CONSULTANT DESIGN MANAGER	REGISTRATION No.	LICENSE Exp DATE
STEVE LOUPE	74891	12/31/19

CALTRANS DESIGN OVERSIGHT APPROVAL	DATE SIGNED
ARICK BAYFORD	7/19/18

X:\237_101_Mathilda\000_CAD\Sheets\AB-Title\041300020400001.dgn

INDEX OF PLANS

SHEET No.	DESCRIPTION
1	TITLE AND LOCATION MAP
2-12	TYPICAL CROSS SECTIONS
13	KEY MAP & LINE INDEX
14	PROJECT CONTROL
15-24	LAYOUTS
25-30	PROFILE AND SUPERELEVATION DIAGRAM
31-93	CONSTRUCTION DETAILS
94-100	TEMPORARY WATER POLLUTION CONTROL PLANS AND QUANTITIES
101-144	DRAINAGE PLANS, PROFILES, DETAILS AND QUANTITIES
145-147	IRRIGATION REMOVAL
148-162	UTILITY PLANS, DETAILS AND QUANTITIES
163-165	CONSTRUCTION AREA SIGNS
166-174	MOTORIST INFORMATION
175-184	STAGE CONSTRUCTION PLANS
185-242	TRAFFIC HANDLING PLANS, DETAILS AND QUANTITIES
243-262	DETOUR PLANS AND QUANTITIES
263-289	PAVEMENT DELINEATION PLANS, DETAILS, AND QUANTITIES
290-358	SIGN PLANS, DETAILS AND QUANTITIES
359-363	SUMMARY OF QUANTITIES
364-372	PLANT REMOVAL AND QUANTITIES
373-381	EROSION CONTROL LEGEND, PLANS, DETAILS, AND QUANTITIES
382-561	ELECTRICAL SYSTEMS PLANS, DETAILS, AND QUANTITIES
562-677	REVISED STANDARD PLANS
678-698	STRUCTURE PLANS
699-736	GRADE CROSSING OF INNOVATION WAY PLANS

THE STANDARD PLANS LIST APPLICABLE TO THIS CONTRACT IS INCLUDED IN THE NOTICE TO BIDDERS AND SPECIAL PROVISIONS BOOK.

STATE OF CALIFORNIA
DEPARTMENT OF TRANSPORTATION

PROJECT PLANS FOR CONSTRUCTION ON
STATE HIGHWAY AND CITY STREET
IN SANTA CLARA COUNTY IN SUNNYVALE
ON ROUTE 101 FROM 0.5 MILE SOUTH OF MATHILDA AVENUE OVERCROSSING TO 0.3 MILE SOUTH OF ROUTE 237/101 SEPARATION, ON ROUTE 237 FROM 0.2 MILE EAST OF ROUTE 237/101 SEPARATION TO 0.3 MILE EAST OF NORTH MATHILDA AVENUE UNDERCROSSING, AND ON NORTH MATHILDA AVENUE FROM ALMANOR AVENUE TO INNOVATION WAY

TO BE SUPPLEMENTED BY STANDARD PLANS DATED 2015

Dist	COUNTY	ROUTE	POST MILES TOTAL PROJECT	SHEET No.	TOTAL SHEETS
04	SCL	101,237	45.2/45.8, 2.7/3.3	1	736

LOCATION MAP

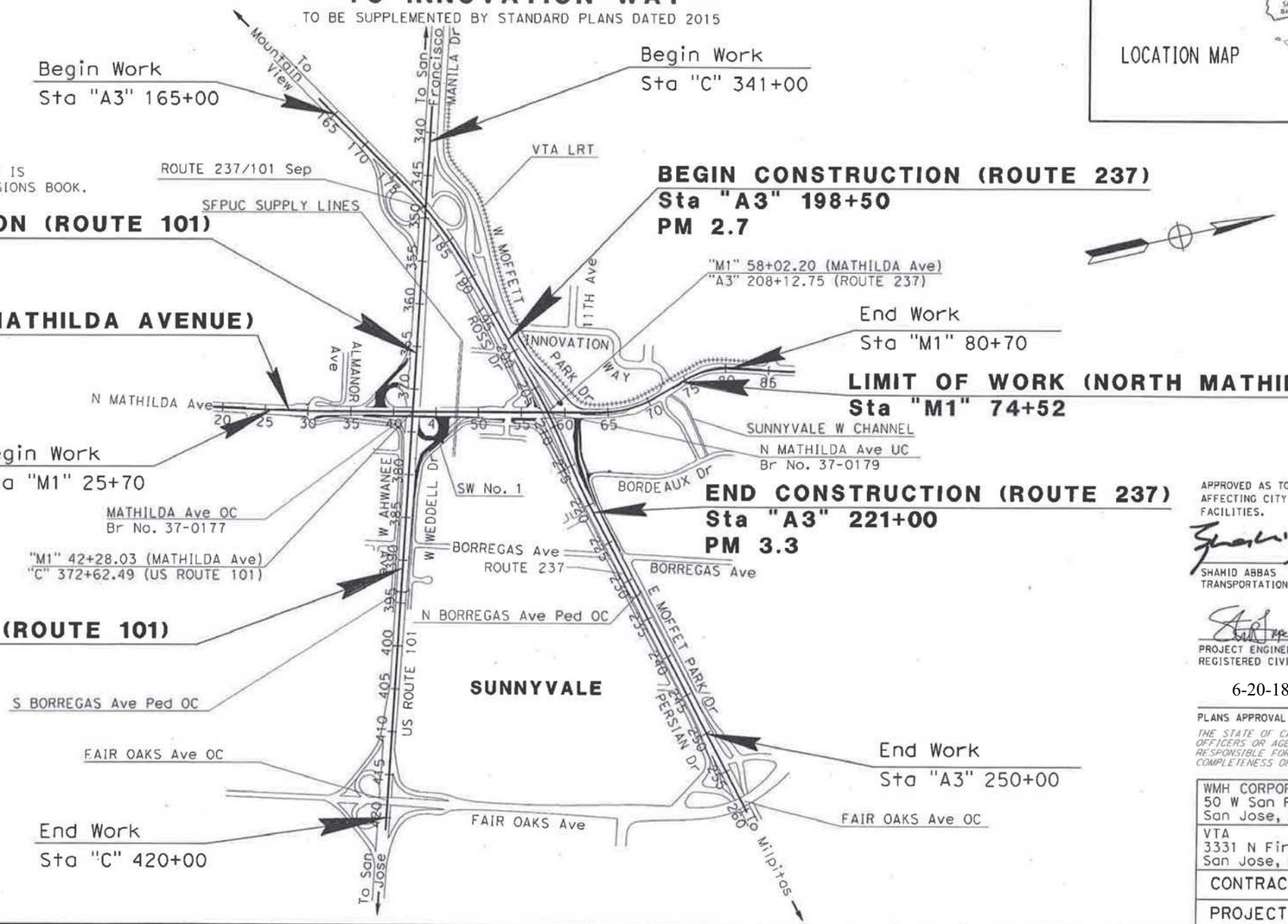

THE CONTRACTOR SHALL POSSESS THE CLASS (OR CLASSES) OF LICENSE AS SPECIFIED IN THE "NOTICE TO BIDDERS."

APPROVED AS TO FEATURES AFFECTING CITY OF SUNNYVALE FACILITIES.

6-14-18
SHAHID ABBAS — DATE
TRANSPORTATION AND TRAFFIC MANAGER

6-13-18
PROJECT ENGINEER — DATE
REGISTERED CIVIL ENGINEER

STEVE LOUPE No. 63575 Exp. 9/30/18 CIVIL — REGISTERED PROFESSIONAL ENGINEER — STATE OF CALIFORNIA

6-20-18
PLANS APPROVAL DATE

THE STATE OF CALIFORNIA OR ITS OFFICERS OR AGENTS SHALL NOT BE RESPONSIBLE FOR THE ACCURACY OR COMPLETENESS OF SCANNED COPIES OF THIS PLAN SHEET.

WMH CORPORATION
50 W San Fernando St, Suite 950
San Jose, CA 95113

VTA
3331 N First St, Building B
San Jose, Ca 95134

CONTRACT No.	04-4H2904
PROJECT ID	041300020

LAST REVISION 01-15-18 — DATE PLOTTED => 6/14/2018 — TIME PLOTTED => 11:11:55 AM

BORDER LAST REVISED 10/4/2013 | CALTRANS WEB SITE IS: HTTP//WWW.DOT.CA.GOV/ | RELATIVE BORDER SCALE IS IN INCHES 0 1 2 3 | USERNAME => Eiiir | DGN FILE => 041300020400001.dgn | UNIT 0000 | PROJECT NUMBER & PHASE 0413000204

NOTES:

1. DIMENSIONS OF THE PAVEMENT STRUCTURES (STRUCTURAL SECTIONS) ARE SUBJECT TO TOLERANCES SPECIFIED IN THE STANDARD SPECIFICATIONS.
2. SUPERELEVATION ARE SHOWN ON THE SUPERELEVATION DIAGRAMS.
3. FINAL LIFT OF RHMA-G SECTION WITHIN MATHILDA AVENUE SHALL BE PAVED IN THE FINAL PHASE OF CONSTRUCTION.
4. FOR LOCATIONS, AND LIMITS OF CONCRETE BARRIER, MGS, FENCE, CURB, AND DIKE REFER TO LAYOUT SHEETS, AND CONSTRUCTION DETAILS.
5. FOR LOCATIONS, LIMITS, AND DETAILS OF SOUND WALL ON RETAINING WALL, SEE STRUCTURE PLANS.

LEGEND:

[No.] NEW STRUCTURAL SECTION NUMBER

◇No. EXISTING STRUCTURAL SECTION NUMBER

ABBREVIATIONS:

BOW	BACK OF WALK
PET	PAVEMENT EDGE TREATMENT
PUE	PUBLIC UTILITY EASEMENT
PAE	PUBLIC ACCESS EASEMENT
RHMA-G	RUBBERIZED HOT MIX ASPHALT (GAP GRADED)
SEG	SUBGRADE ENHANCEMENT GEOTEXTILE (CLASS B1)
C&G	CURB AND GUTTER
C	CONSTRUCTION DETAILS
RSCB	RAPID STRENGTH CONCRETE BASE

US 101 (Aux Ln) DESIGN DESIGNATION

ADT (2020)	80,650	D	50%
ADT (2040)	87,200	T	3.9%
DHV	16,180	V	70 mph
ESAL	14,279,060	TI_{20}	12.5

PAVEMENT CLIMATE REGION

CENTRAL COAST

Dist	COUNTY	ROUTE	POST MILES TOTAL PROJECT	SHEET No.	TOTAL SHEETS
04	SCL	101,237	45.2/45.8, 2.7/3.3	2	736

6-13-18
REGISTERED CIVIL ENGINEER DATE

STEVE LOUPE No. 63575 Exp. 9/30/20 CIVIL — REGISTERED PROFESSIONAL ENGINEER — STATE OF CALIFORNIA

6-20-18
PLANS APPROVAL DATE

THE STATE OF CALIFORNIA OR ITS OFFICERS OR AGENTS SHALL NOT BE RESPONSIBLE FOR THE ACCURACY OR COMPLETENESS OF SCANNED COPIES OF THIS PLAN SHEET.

WMH CORPORATION
50 W San Fernando St
Suite 950
San Jose, CA 95113

VTA
3331 N First St
Building B
San Jose, Ca 95134

EXISTING STRUCTURAL SECTION

◇1	1.35′ AC
◇2	0.75′ AC
◇3	0.83′ AC
◇4	0.58′ AC 0.58′ CTB
◇5	0.58′ AC 0.29′ CTB
◇6	1.54′ AC 0.25′ CTB
◇7	0.56′ AC
◇8	1.67′ AC 0.25′ CTB
◇9	0.67′ AC
◇10	0.92′ AC 0.42′ CTB
◇11	0.85′ PCC 0.50′ AC
◇12	1.67′ AC
◇13	0.83′ AC 0.17′ AB
◇14	0.58′ AC 0.75′ AB
◇15	0.50′ AC 0.08′ CTB
◇16	1.54′ AC 0.25′ AB
◇17	0.50′ AC 0.08′ CTB
◇18	0.46′ AC
◇19	1.1′ AC
◇20	0.71′ AC
◇21	1.0′ AC
◇22	0.10′ RHMA 0.15′ - 0.80′ AC 0.67′ - 0.92′ PCC
◇23	0.90′ AC 0.50′ AS CI 4
◇24	0.9′ AC
◇25	0.14′ AC (TYPE A) 0.16′ AB 0.15′ AS
◇26	0.30′ AC (TYPE A)
◇27	0.83′ AC
◇28	1.2′ AC 0.20′ AB
◇29	1.50′ AC
◇30	0.25′ AC 0.50′ AB 1.33′ AS
◇31	0.32′ AC 0.75′ PCC 0.33′ CTB
◇32	0.50′ RIVER COBBLES 0.33′ PCC 0.33′ CTB
◇33	0.33′ PCC 0.33′ CTB

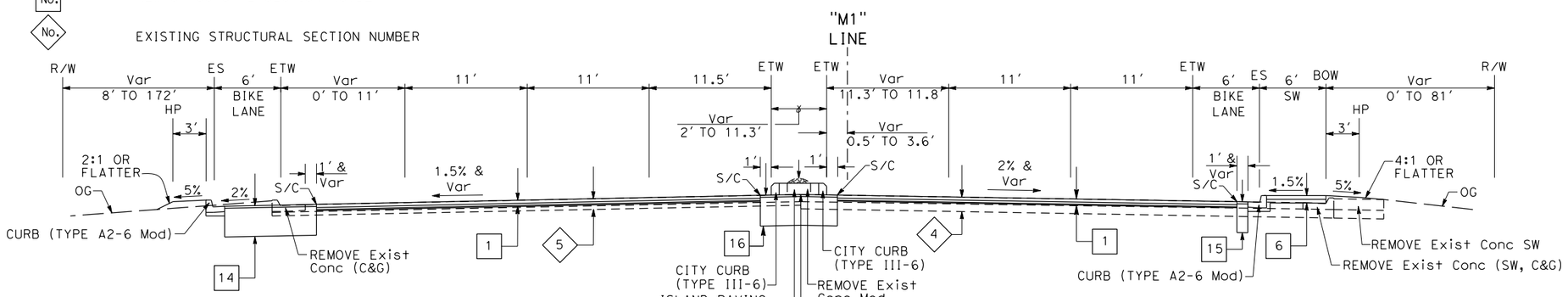

SOUTHBOUND

"M1" 33+07 TO 37+24

NORTHBOUND

"M1" 33+07 TO 37+99

NORTH MATHILDA Ave

NEW STRUCTURAL SECTION

1	0.25′ AC COLD PLANE Var 0.25′ TO 0.60′ HMA (A)
2	0.60′ HMA (TYPE A) 2.10′ CI2 AB SEG
3	0.17′ RHMA-G 0.38′ HMA (TYPE A) 1.75′ CI2 AB SEG
4	0.71′ PCC W/ POLYPROPYLENE FIBERS 0.71′ CI2 AB
5	0.17′ RHMA-G 0.48′ HMA (TYPE A) 2.30′ CI2 AB SEG
6	0.33′ PCC 0.33′ CI2 AB
7	0.50′ PCC 0.50′ CI2 AB
8	Var 0.50′ TO 1.60′ HMA (TYPE A)
9	0.63′ COLD PLANE AC Var 0.63′ TO 0.75′ HMA (TYPE A)
10	TYPE III SLURRY SEAL
11	0.83′ COLD PLANE AC 0.33′ DECOMPOSED GRANITE PAVING 0.50′ CI2 AB
12	0.17′ COLD PLANE AC Var 0.17′ TO 2.30′ HMA (A)
13	2.50′ HMA (TYPE A)
14	1.50′ HMA (TYPE A) 0.33′ CI 2 AB SEG
15	0.83′ COLD PLANE AC 0.83′ HMA (TYPE A)
16	0.60′ HMA (TYPE A) 1.25′ RSCB SEG

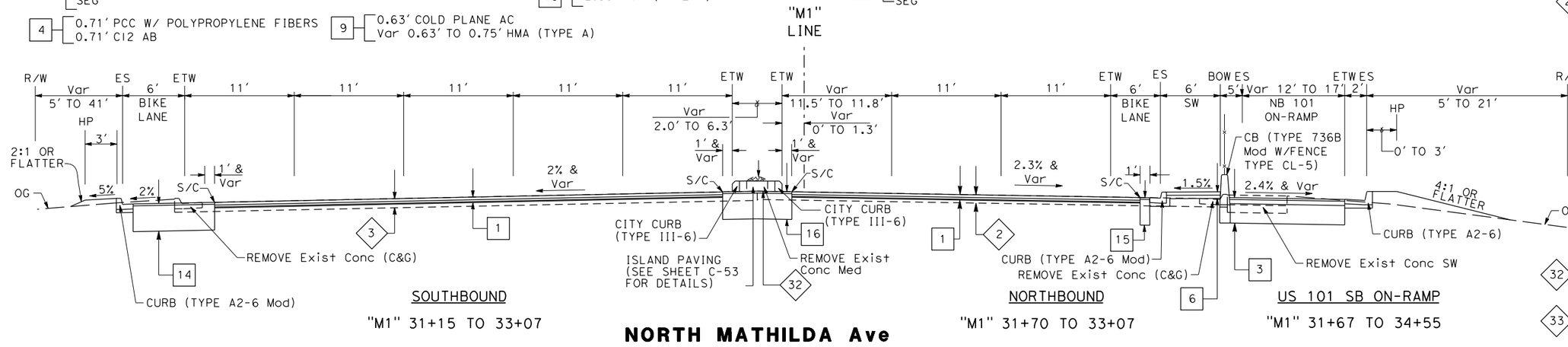

SOUTHBOUND

"M1" 31+15 TO 33+07

NORTHBOUND

"M1" 31+70 TO 33+07

US 101 SB ON-RAMP

"M1" 31+67 TO 34+55

NORTH MATHILDA Ave

TYPICAL CROSS SECTION

NO SCALE

X-1

LAST REVISION 01-15-18
DATE PLOTTED => 12/3/2018
TIME PLOTTED => 12:20:32 PM

STATE OF CALIFORNIA - DEPARTMENT OF TRANSPORTATION	CONSULTANT FUNCTIONAL SUPERVISOR	CALCULATED-DESIGNED BY	REVISED BY	DATE REVISED
Caltrans	TIMOTHY J. LEE	CHECKED BY	SMD	8/13/17
		STEVE LOUPE	CR	05/03/18
		SHAWN VOGTMAN		

X:\237_101_Mathilda\000_CAD\Sheets\000_Submittals\Conformed Plans\0413000204ca001.dgn

BORDER LAST REVISED 7/2/2010 | USERNAME => eilif | DGN FILE => 0413000204ca001.dgn | RELATIVE BORDER SCALE IS IN INCHES 0 1 2 3 | UNIT 0000 | PROJECT NUMBER & PHASE 0413000204

Dist	COUNTY	ROUTE	POST MILES TOTAL PROJECT	SHEET No.	TOTAL SHEETS
04	SCL	101,237	45.2/45.8, 2.7/3.3	3	736

REGISTERED CIVIL ENGINEER — 6-13-18 DATE

PLANS APPROVAL DATE — 6-20-18

REGISTERED PROFESSIONAL ENGINEER — STEVE LOUPE — No. 63575 — Exp. 9/30/20 — CIVIL — STATE OF CALIFORNIA

THE STATE OF CALIFORNIA OR ITS OFFICERS OR AGENTS SHALL NOT BE RESPONSIBLE FOR THE ACCURACY OR COMPLETENESS OF SCANNED COPIES OF THIS PLAN SHEET.

WMH CORPORATION
50 W San Fernando St
Suite 950
San Jose, CA 95113

VTA
3331 N First St
Building B
San Jose, Ca 95134

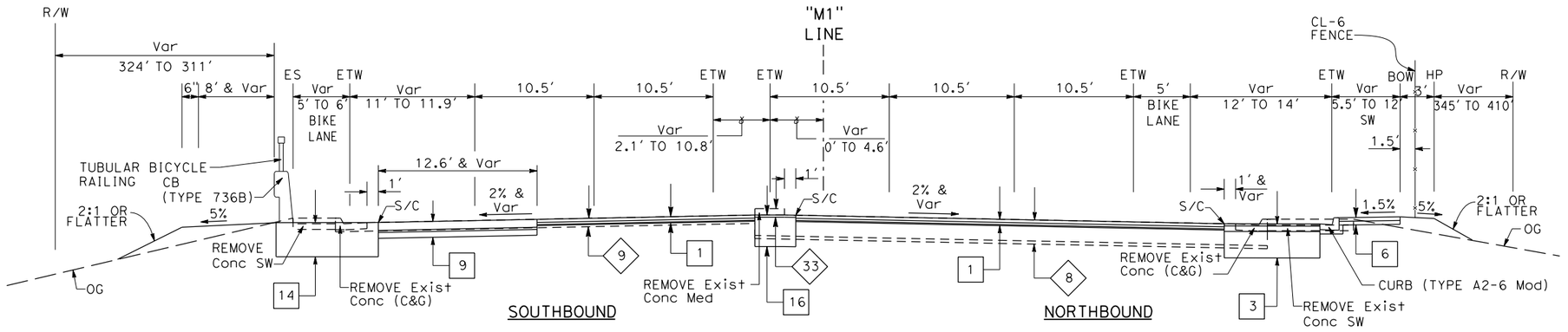

MATHILDA Ave

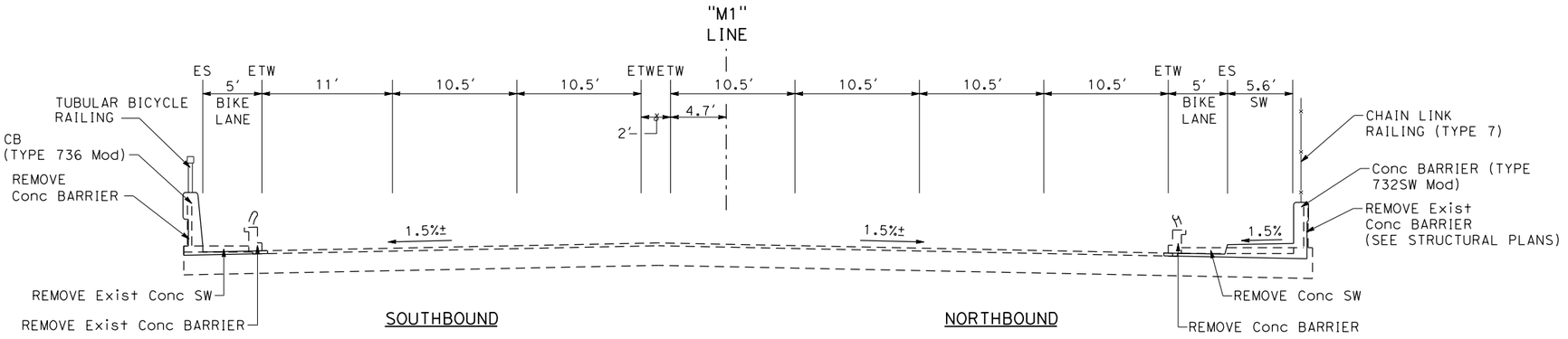

MATHILDA Ave AT US 101 OVERCROSSING

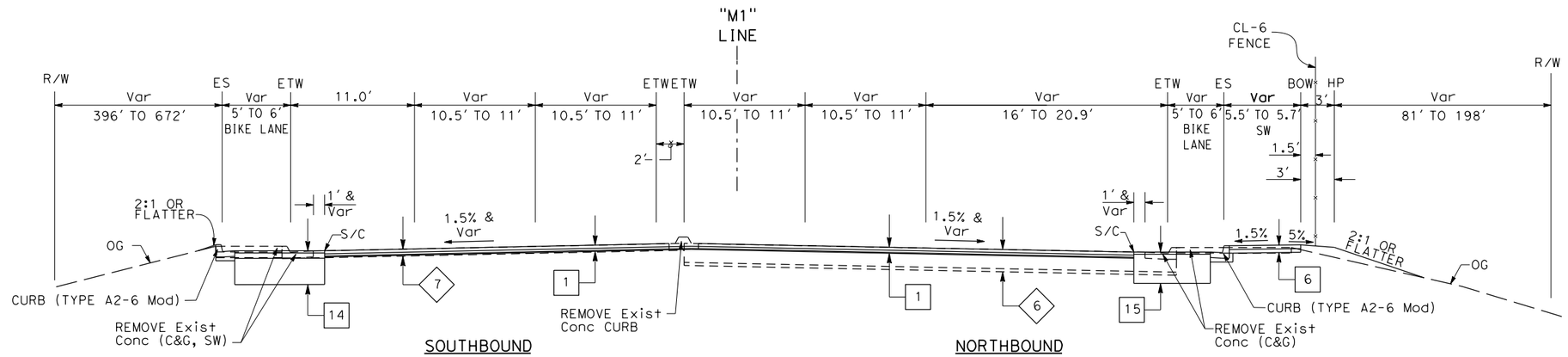

FOR NOTES, ABBREVIATIONS &/OR LEGEND, SEE SHEETS X-1

TYPICAL CROSS SECTION

NO SCALE

MATHILDA Ave

X-2

	CR	05/03/18
	SMD	8/13/17
REVISED BY		DATE REVISED
STEVE LOUPE	SHAWN VOGTMAN	
CALCULATED-DESIGNED BY	CHECKED BY	
TIMOTHY J. LEE		

CONSULTANT FUNCTIONAL SUPERVISOR

STATE OF CALIFORNIA - DEPARTMENT OF TRANSPORTATION

Caltrans

LAST REVISION 01-15-18 — DATE PLOTTED => 12/3/2018 — TIME PLOTTED => 12:20:34 PM

X:\237_101_Mathilda\000_CAD\Sheets\000_Submittals\Conformed Plans\0413000204ca002.dgn

BORDER LAST REVISED 7/2/2010	USERNAME =>eilif DGN FILE => 0413000204ca002.dgn	RELATIVE BORDER SCALE IS IN INCHES 0 1 2 3	UNIT 0000	PROJECT NUMBER & PHASE 0413000204

Dist	COUNTY	ROUTE	POST MILES TOTAL PROJECT	SHEET No.	TOTAL SHEETS
04	SCL	101,237	45.2/45.8, 2.7/3.3	4	736

6-13-18
REGISTERED CIVIL ENGINEER DATE

STEVE LOUPE No. 63575 Exp. 9/30/20 CIVIL — REGISTERED PROFESSIONAL ENGINEER — STATE OF CALIFORNIA

6-20-18
PLANS APPROVAL DATE

THE STATE OF CALIFORNIA OR ITS OFFICERS OR AGENTS SHALL NOT BE RESPONSIBLE FOR THE ACCURACY OR COMPLETENESS OF SCANNED COPIES OF THIS PLAN SHEET.

WMH CORPORATION
50 W San Fernando St
Suite 950
San Jose, CA 95113

VTA
3331 N First St
Building B
San Jose, Ca 95134

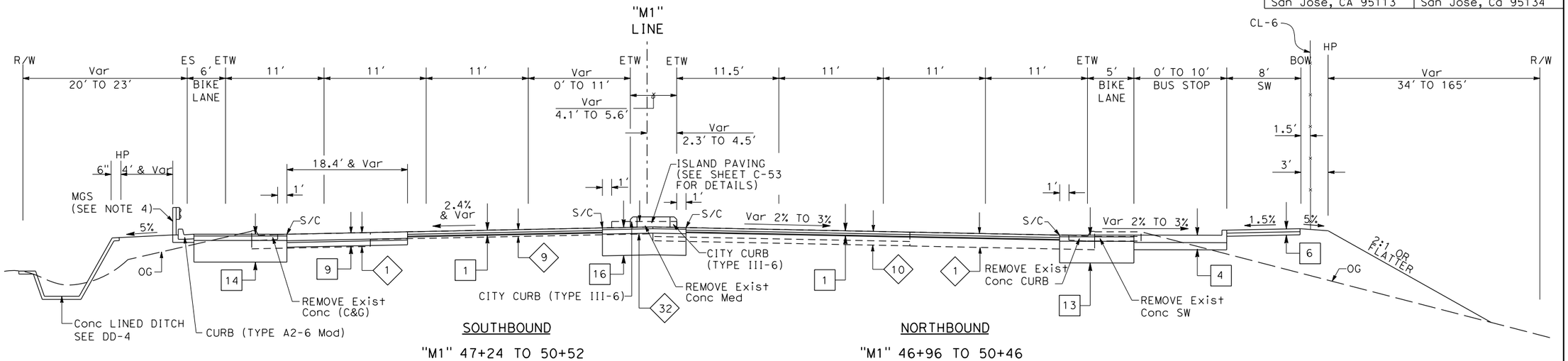

SOUTHBOUND
"M1" 47+24 TO 50+52

NORTHBOUND
"M1" 46+96 TO 50+46

MATHILDA Ave

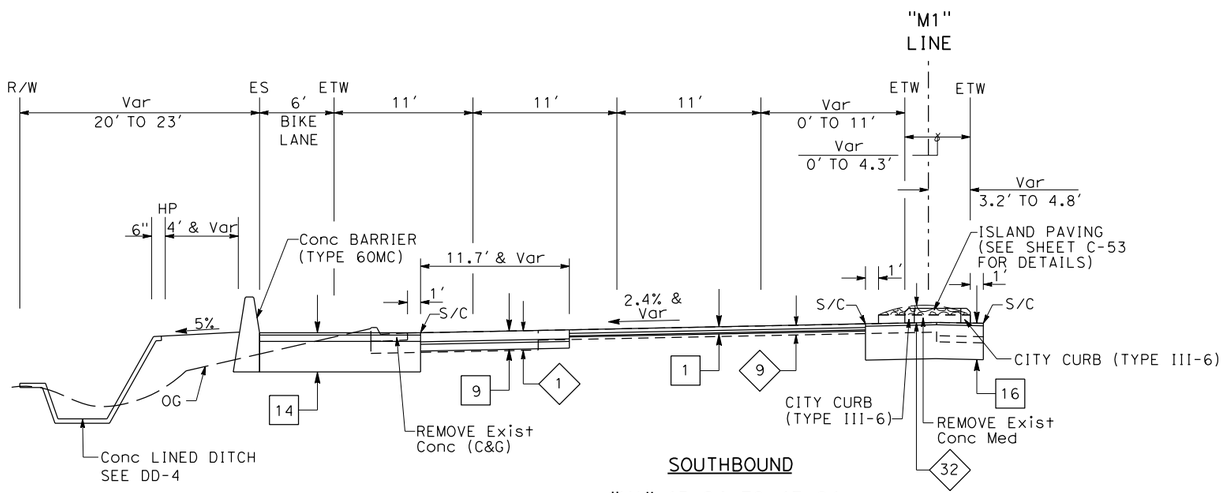

SOUTHBOUND
"M1" 45+24 TO 47+24

MATHILDA Ave

INTERSECTION AREA.
SEE CONSTRUCTION DETAILS
FOR NORTHBOUND
MATHILDA AVENUE

FOR NOTES, ABBREVIATIONS &/OR LEGEND,
SEE SHEETS X-1

TYPICAL CROSS SECTION

NO SCALE

X-3

REVISED BY	DATE REVISED
DAG	09/19/18
CR	05/03/18
SMD	8/13/17

CALCULATED-DESIGNED BY: STEVE LOUPE
CHECKED BY: SHAWN VOGTMAN
CONSULTANT FUNCTIONAL SUPERVISOR: TIMOTHY J. LEE
STATE OF CALIFORNIA - DEPARTMENT OF TRANSPORTATION
Caltrans

LAST REVISION 01-15-18
DATE PLOTTED => 12/3/2018
TIME PLOTTED => 12:20:35 PM

X:\237_101_Mathilda\000_CAD\Sheets\000_Submittals\Conformed Plans\0413000204ca003.dgn

BORDER LAST REVISED 7/2/2010 | USERNAME => eilif | DGN FILE => 0413000204ca003.dgn | RELATIVE BORDER SCALE IS IN INCHES 0 1 2 3 | UNIT 0000 | PROJECT NUMBER & PHASE 0413000204

Dist	COUNTY	ROUTE	POST MILES TOTAL PROJECT	SHEET No.	TOTAL SHEETS
04	SCL	101,237	45.2/45.8, 2.7/3.3	5	736

REGISTERED CIVIL ENGINEER 6-13-18 DATE

6-20-18
PLANS APPROVAL DATE

REGISTERED PROFESSIONAL ENGINEER STEVE LOUPE No. 63575 Exp. 9/30/20 CIVIL STATE OF CALIFORNIA

THE STATE OF CALIFORNIA OR ITS OFFICERS OR AGENTS SHALL NOT BE RESPONSIBLE FOR THE ACCURACY OR COMPLETENESS OF SCANNED COPIES OF THIS PLAN SHEET.

WMH CORPORATION
50 W San Fernando St
Suite 950
San Jose, CA 95113

VTA
3331 N First St
Building B
San Jose, Ca 95134

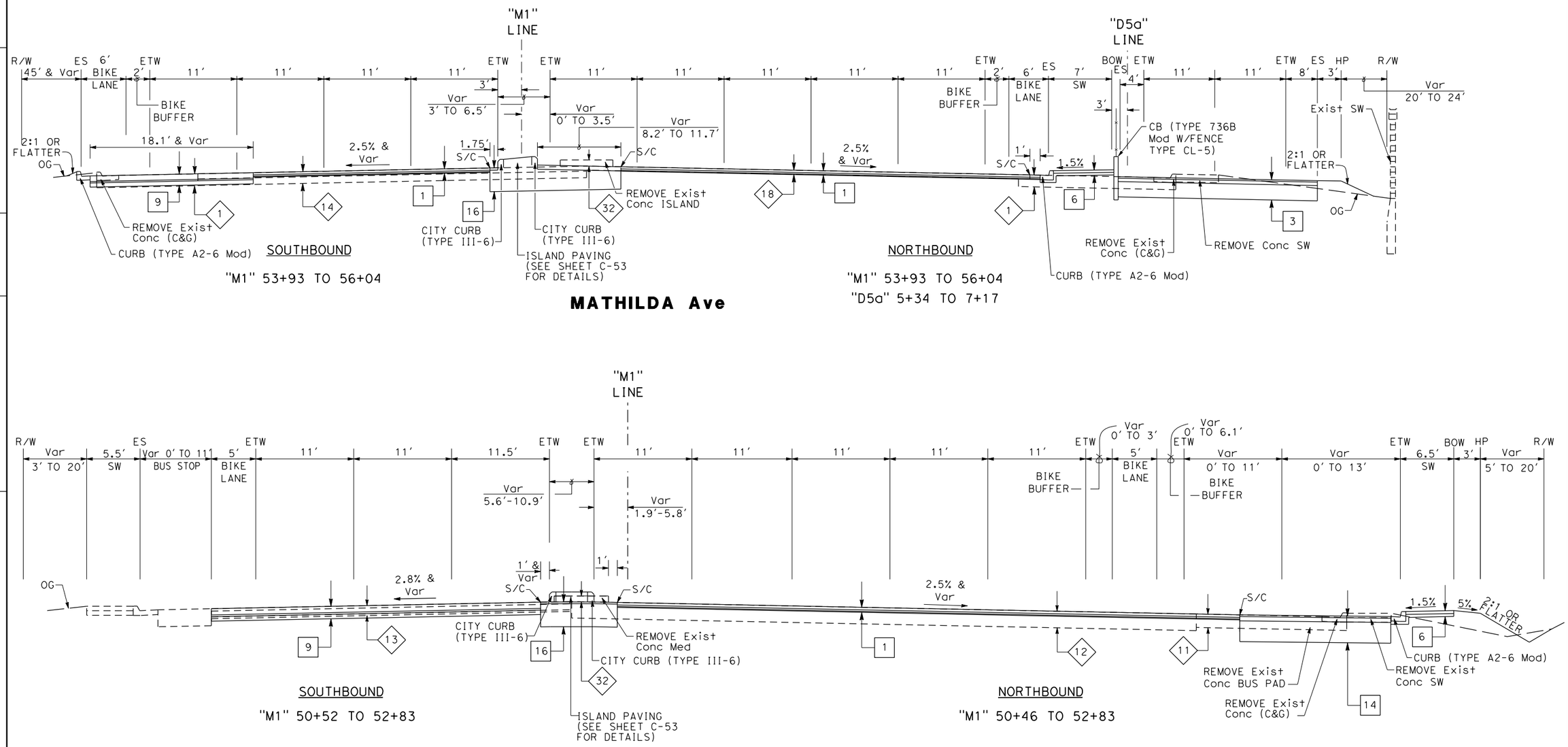

FOR NOTES, ABBREVIATIONS &/OR LEGEND, SEE SHEETS X-1

TYPICAL CROSS SECTION

NO SCALE

X-4

STATE OF CALIFORNIA - DEPARTMENT OF TRANSPORTATION
Caltrans

CONSULTANT FUNCTIONAL SUPERVISOR: TIMOTHY J. LEE
CALCULATED-DESIGNED BY: STEVE LOUPE
CHECKED BY: SHAWN VOGTMAN
REVISED BY: SMD
DATE REVISED: 8/13/17
CR: 05/03/18
DAG: 09/19/18

X:\237_101_Mathilda\000_CAD\Sheets\000_Submittals\Conformed Plans\0413000204ca004.dgn

LAST REVISION 01-15-18
DATE PLOTTED => 12/3/2018
TIME PLOTTED => 12:20:36 PM

BORDER LAST REVISED 7/2/2010
USERNAME => eilif
DGN FILE => 0413000204ca004.dgn
RELATIVE BORDER SCALE IS IN INCHES 0 1 2 3
UNIT 0000
PROJECT NUMBER & PHASE 0413000204

Dist	COUNTY	ROUTE	POST MILES TOTAL PROJECT	SHEET No.	TOTAL SHEETS
04	SCL	101,237	45.2/45.8, 2.7/3.3	6	736

6-13-18
REGISTERED CIVIL ENGINEER — DATE

STEVE LOUPE No. 63575 Exp. 9/30/20 CIVIL — REGISTERED PROFESSIONAL ENGINEER — STATE OF CALIFORNIA

6-20-18
PLANS APPROVAL DATE

THE STATE OF CALIFORNIA OR ITS OFFICERS OR AGENTS SHALL NOT BE RESPONSIBLE FOR THE ACCURACY OR COMPLETENESS OF SCANNED COPIES OF THIS PLAN SHEET.

WMH CORPORATION
50 W San Fernando St
Suite 950
San Jose, CA 95113

VTA
3331 N First St
Building B
San Jose, Ca 95134

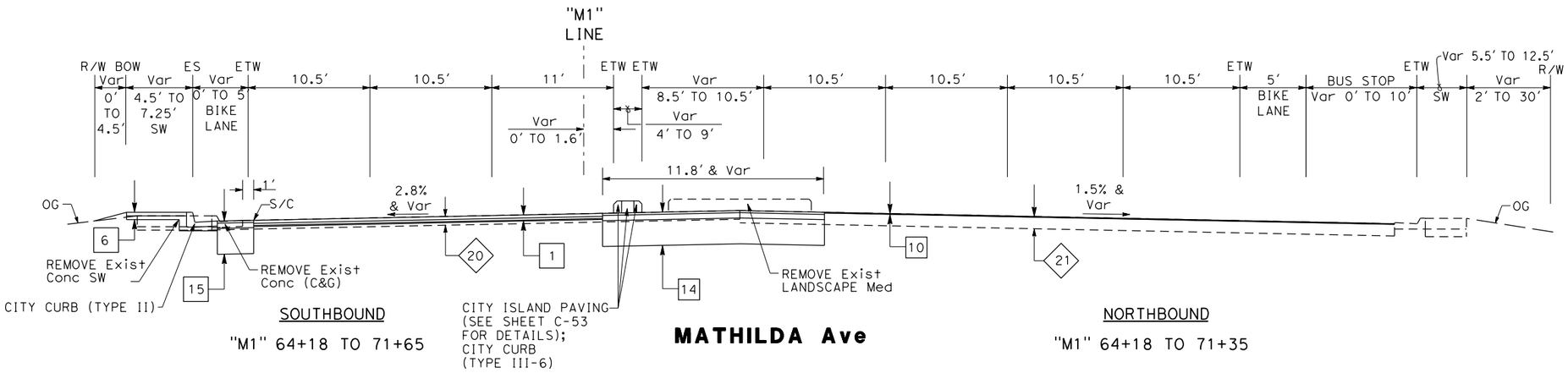

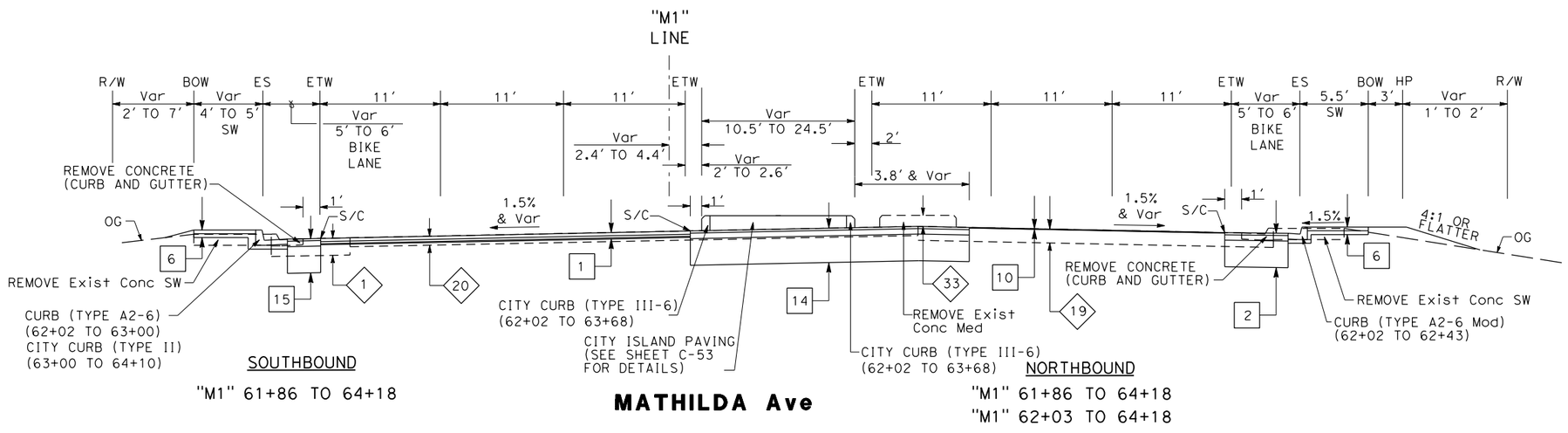

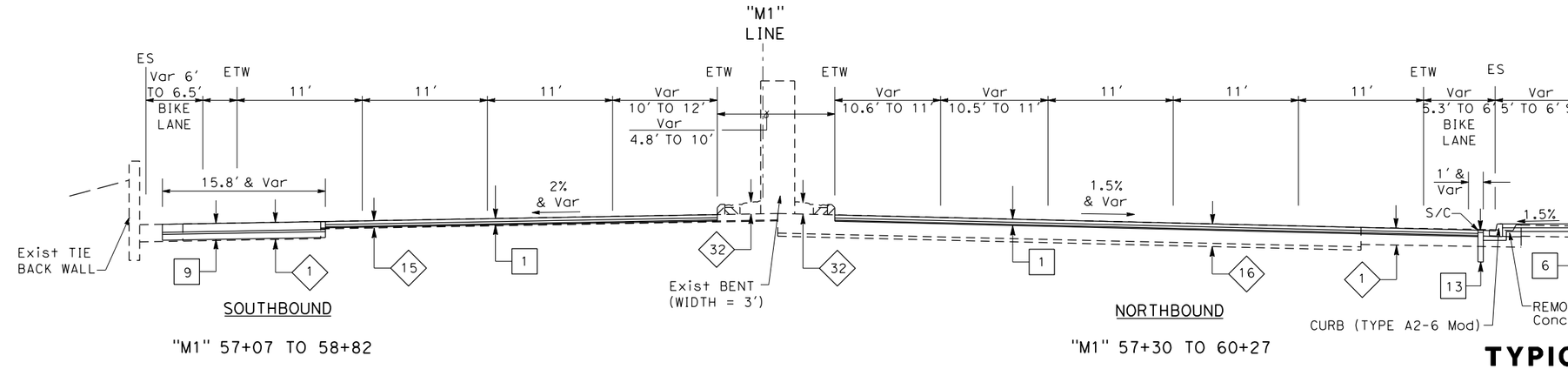

MATHILDA Ave AT SR 237 UC

TYPICAL CROSS SECTION

NO SCALE

X-5

FOR NOTES, ABBREVIATIONS &/OR LEGEND, SEE SHEETS X-1

LAST REVISION 01-15-18
DATE PLOTTED => 12/3/2018
TIME PLOTTED => 12:20:37 PM

STATE OF CALIFORNIA - DEPARTMENT OF TRANSPORTATION
CONSULTANT FUNCTIONAL SUPERVISOR: TIMOTHY J. LEE
CALCULATED-DESIGNED BY: STEVE LOUPE
CHECKED BY: SHAWN VOGTMAN
REVISED BY: CR | SMD
DATE REVISED: 05/03/18 | 8/13/17

X:\237_101_Mathilda\000_CAD\Sheets\000_Submittals\Conformed Plans\0413000204ca005.dgn

BORDER LAST REVISED 7/2/2010 | USERNAME => eilif | DGN FILE => 0413000204ca005.dgn | RELATIVE BORDER SCALE IS IN INCHES 0 1 2 3 | UNIT 0000 | PROJECT NUMBER & PHASE 0413000204

Dist	COUNTY	ROUTE	POST MILES TOTAL PROJECT	SHEET No.	TOTAL SHEETS
04	SCL	101,237	45.2/45.8, 2.7/3.3	7	736

REGISTERED CIVIL ENGINEER — DATE 6-13-18

PLANS APPROVAL DATE 6-20-18

REGISTERED PROFESSIONAL ENGINEER — STEVE LOUPE — No. 63575 — Exp. 9/30/18 — CIVIL — STATE OF CALIFORNIA

THE STATE OF CALIFORNIA OR ITS OFFICERS OR AGENTS SHALL NOT BE RESPONSIBLE FOR THE ACCURACY OR COMPLETENESS OF SCANNED COPIES OF THIS PLAN SHEET.

WMH CORPORATION
50 W San Fernando St
Suite 950
San Jose, CA 95113

VTA
3331 N First St
Building B
San Jose, Ca 95134

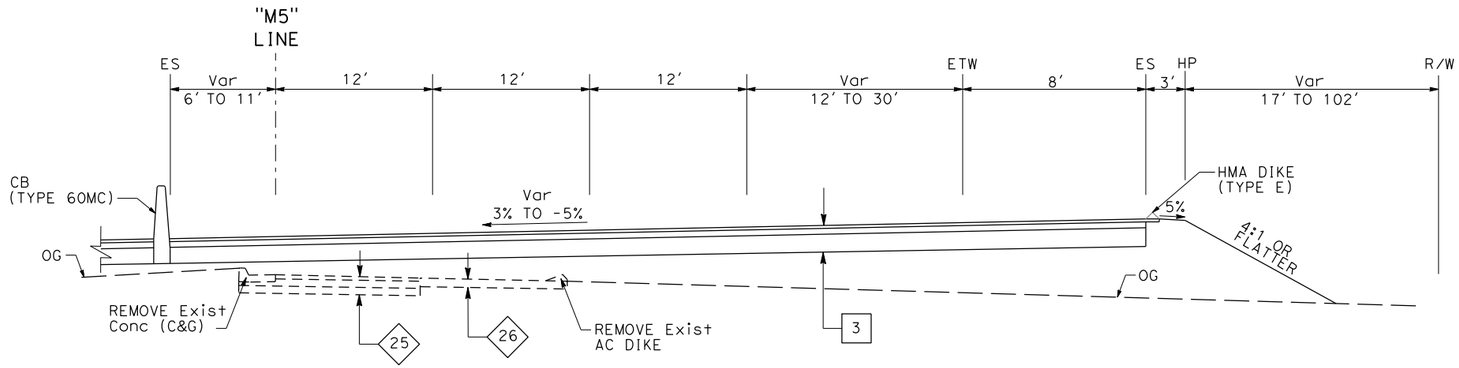

ROUTE 101 SB OFF-RAMP

"M5" 70+50 TO "M5" 73+26

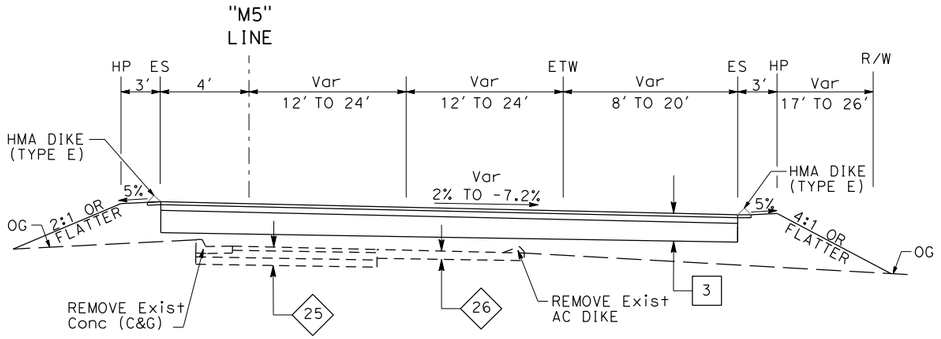

ROUTE 101 SB OFF-RAMP

"M5" 67+80 TO "M5" 70+50

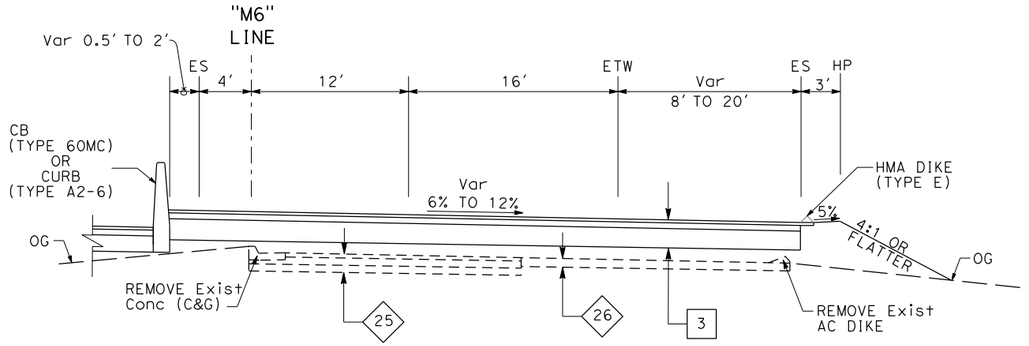

ROUTE 101 SB ON-RAMP

"M6" 66+79 TO "M6" 70+04

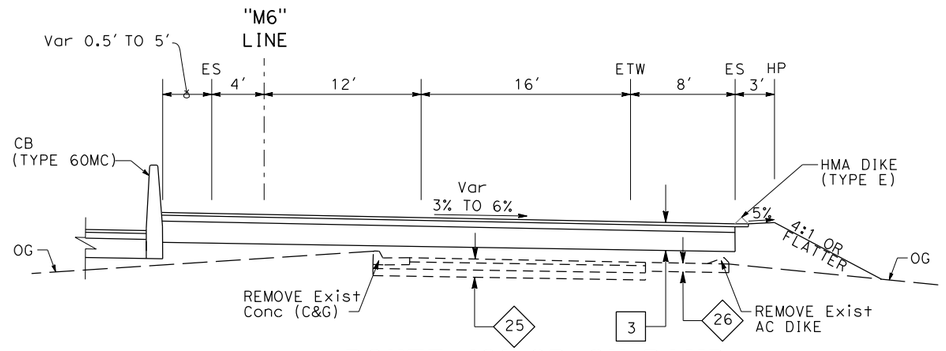

ROUTE 101 SB ON-RAMP

"M6" 65+50 TO "M6" 66+79

FOR NOTES, ABBREVIATIONS &/OR LEGEND, SEE SHEETS X-1

TYPICAL CROSS SECTION

NO SCALE

X-6

DESIGNED BY	STEVE LOUPE	REVISED BY	SMD
CALCULATED-		DATE REVISED	8/13/17
CHECKED BY	SHAWN VOGTMAN		
			CR 05/03/18
			DAG 09/19/18

CONSULTANT FUNCTIONAL SUPERVISOR: TIMOTHY J. LEE

STATE OF CALIFORNIA - DEPARTMENT OF TRANSPORTATION

Caltrans

LAST REVISION: DATE PLOTTED => 9/20/2018; TIME PLOTTED => 11:51:29 AM

x:\237_101_Mathilda\000_CAD\Sheets\CA-XSections\0413000204ca006.dgn

BORDER LAST REVISED 7/2/2010 | USERNAME => Dianneg | DGN FILE => 0413000204ca006.dgn | RELATIVE BORDER SCALE IS IN INCHES 0 1 2 3 | UNIT 0000 | PROJECT NUMBER & PHASE 0413000204

Dist	COUNTY	ROUTE	POST MILES TOTAL PROJECT	SHEET No.	TOTAL SHEETS
04	SCL	101,237	45.2/45.8, 2.7/3.3	8	736

REGISTERED CIVIL ENGINEER — DATE 6-13-18

PLANS APPROVAL DATE 6-20-18

REGISTERED PROFESSIONAL ENGINEER — STEVE LOUPE — No. 63575 — Exp. 9/30/18 — CIVIL — STATE OF CALIFORNIA

THE STATE OF CALIFORNIA OR ITS OFFICERS OR AGENTS SHALL NOT BE RESPONSIBLE FOR THE ACCURACY OR COMPLETENESS OF SCANNED COPIES OF THIS PLAN SHEET.

WMH CORPORATION
50 W San Fernando St
Suite 950
San Jose, CA 95113

VTA
3331 N First St
Building B
San Jose, Ca 95134

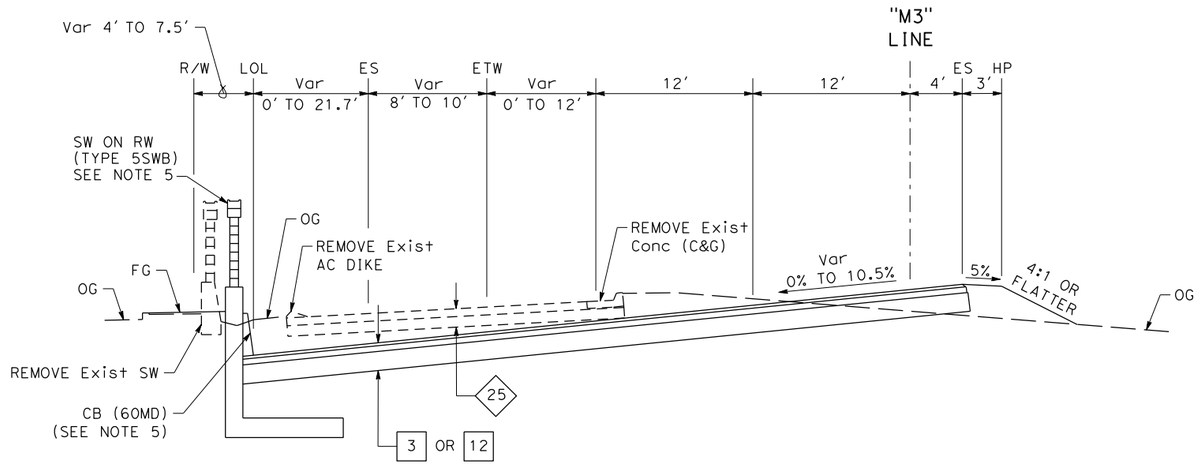

ROUTE 101 NB OFF-RAMP

"M3" 74+43 TO "M3" 78+87

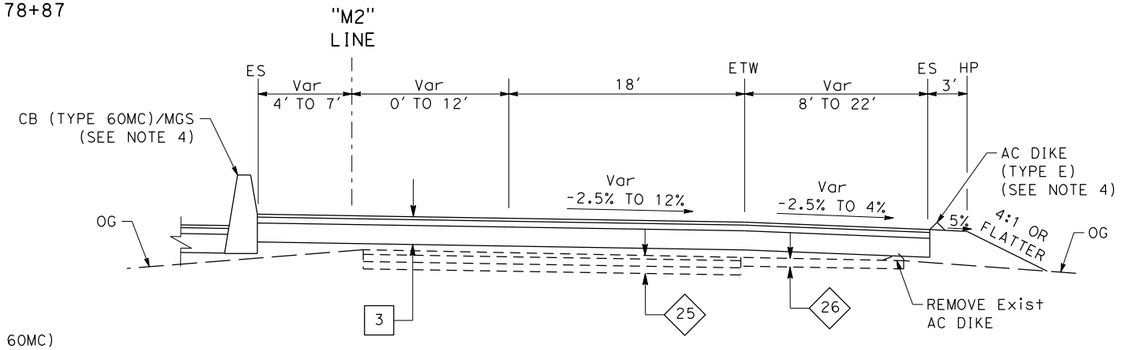

ROUTE 101 NB ON-RAMP

"M2" 68+49 TO "M2" 74+10

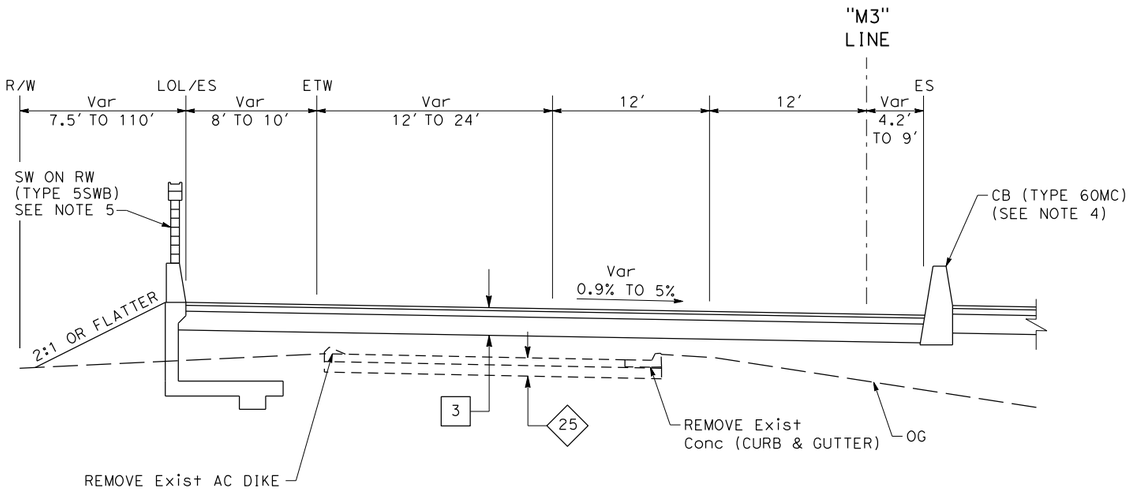

ROUTE 101 NB OFF-RAMP

"M3" 72+90 TO "M3" 74+43

FOR NOTES, ABBREVIATIONS &/OR LEGEND, SEE SHEETS X-1

TYPICAL CROSS SECTION

NO SCALE

X-7

CALCULATED-DESIGNED BY	STEVE LOUPE	REVISED BY	SMD	CR	DAG
CHECKED BY	SHAWN VOGTMAN	DATE REVISED	8/13/17	05/03/18	09/19/18

CONSULTANT FUNCTIONAL SUPERVISOR: TIMOTHY J. LEE

STATE OF CALIFORNIA - DEPARTMENT OF TRANSPORTATION — Caltrans

LAST REVISION 01-15-18 | DATE PLOTTED => 9/20/2018 | TIME PLOTTED => 11:49:28 AM

X:\237_101_Mathilda\000_CAD\Sheets\CA-XSections\0413000204ca007.dgn

BORDER LAST REVISED 7/2/2010 | USERNAME => Dianneg | DGN FILE => 0413000204ca007.dgn | RELATIVE BORDER SCALE IS IN INCHES 0 1 2 3 | UNIT 0000 | PROJECT NUMBER & PHASE 0413000204

Dist	COUNTY	ROUTE	POST MILES TOTAL PROJECT	SHEET No.	TOTAL SHEETS
04	SCL	101,237	45.2/45.8, 2.7/3.3	9	736

REGISTERED CIVIL ENGINEER — 6-13-18 DATE

STEVE LOUPE No. 63575 Exp. 9/30/18 CIVIL — REGISTERED PROFESSIONAL ENGINEER — STATE OF CALIFORNIA

6-20-18
PLANS APPROVAL DATE

THE STATE OF CALIFORNIA OR ITS OFFICERS OR AGENTS SHALL NOT BE RESPONSIBLE FOR THE ACCURACY OR COMPLETENESS OF SCANNED COPIES OF THIS PLAN SHEET.

WMH CORPORATION
50 W San Fernando St
Suite 950
San Jose, CA 95113

VTA
3331 N First St
Building B
San Jose, Ca 95134

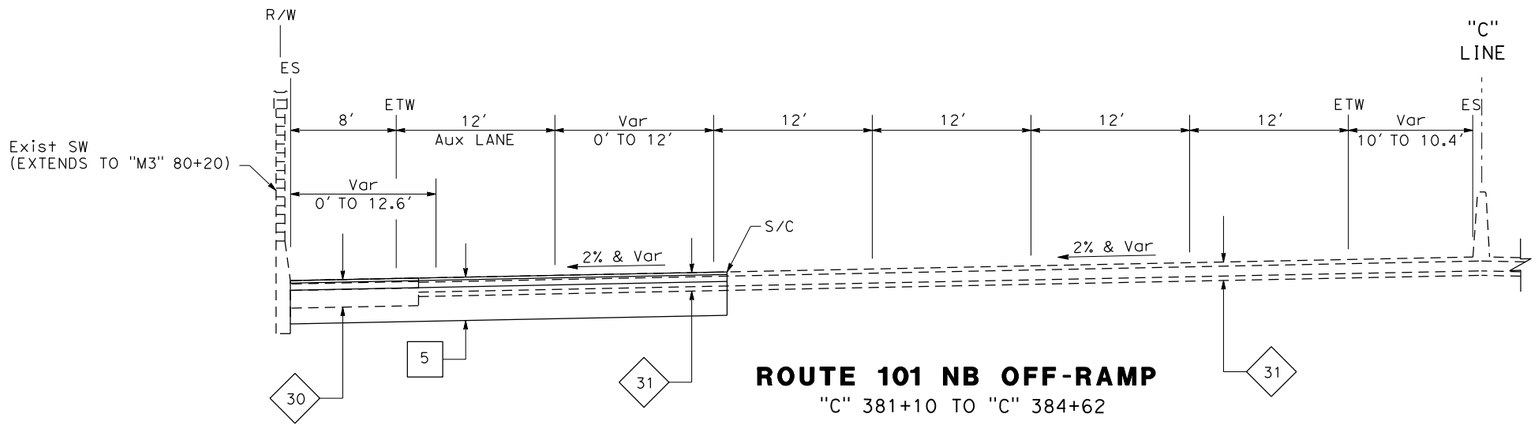

ROUTE 101 NB OFF-RAMP
"C" 381+10 TO "C" 384+62

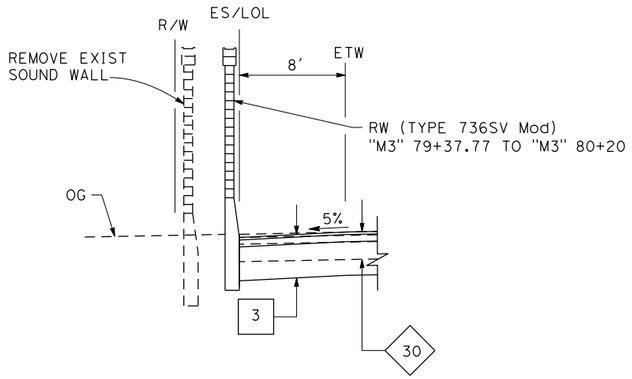

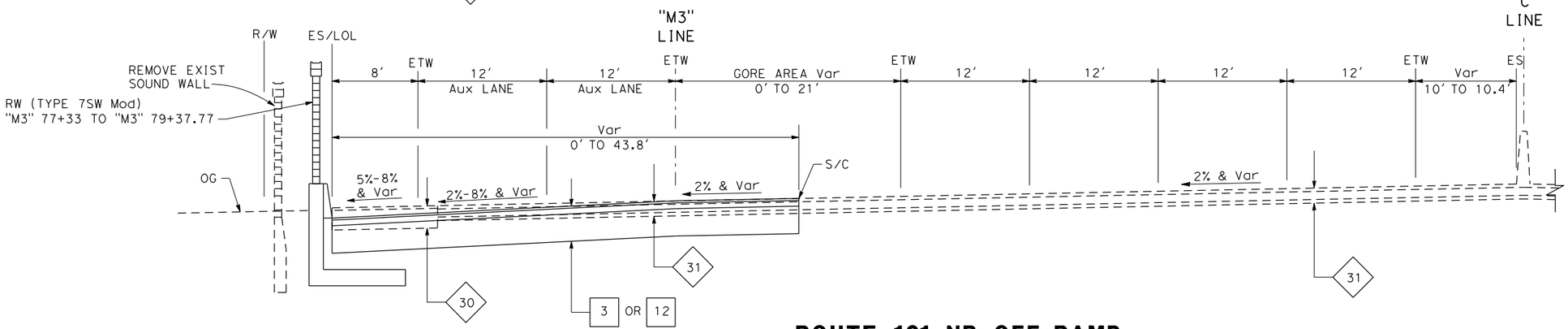

ROUTE 101 NB OFF-RAMP
"C" 378+86 TO "C" 381+10
"M3" 78+87 TO "M3" 81+10

FOR NOTES, ABBREVIATIONS &/OR LEGEND, SEE SHEETS X-1

TYPICAL CROSS SECTION
NO SCALE

X-8

	REVISED BY	DATE REVISED
CR	SMD	8/13/17 05/03/18

CALCULATED-DESIGNED BY: STEVE LOUPE
CHECKED BY: SHAWN VOGTMAN

CONSULTANT FUNCTIONAL SUPERVISOR: TIMOTHY J. LEE

STATE OF CALIFORNIA - DEPARTMENT OF TRANSPORTATION

Caltrans

LAST REVISION 01-15-18
DATE PLOTTED => 6/20/2018
TIME PLOTTED => 10:49:53 AM

X:\237_101_Mathilda\000_CAD\Sheets\CA-XSections\0413000204ca008.dgn

BORDER LAST REVISED 7/2/2010 | USERNAME => Eilif | DGN FILE => 0413000204ca008.dgn | RELATIVE BORDER SCALE IS IN INCHES 0 1 2 3 | UNIT 0000 | PROJECT NUMBER & PHASE 0413000204

Dist	COUNTY	ROUTE	POST MILES TOTAL PROJECT	SHEET No.	TOTAL SHEETS
04	SCL	101,237	45.2/45.8, 2.7/3.3	10	736

REGISTERED CIVIL ENGINEER — 6-13-18 DATE

6-20-18
PLANS APPROVAL DATE

REGISTERED PROFESSIONAL ENGINEER — STEVE LOUPE No. 63575 Exp. 9/30/18 CIVIL — STATE OF CALIFORNIA

THE STATE OF CALIFORNIA OR ITS OFFICERS OR AGENTS SHALL NOT BE RESPONSIBLE FOR THE ACCURACY OR COMPLETENESS OF SCANNED COPIES OF THIS PLAN SHEET.

WMH CORPORATION
50 W San Fernando St
Suite 950
San Jose, CA 95113

VTA
3331 N First St
Building B
San Jose, Ca 95134

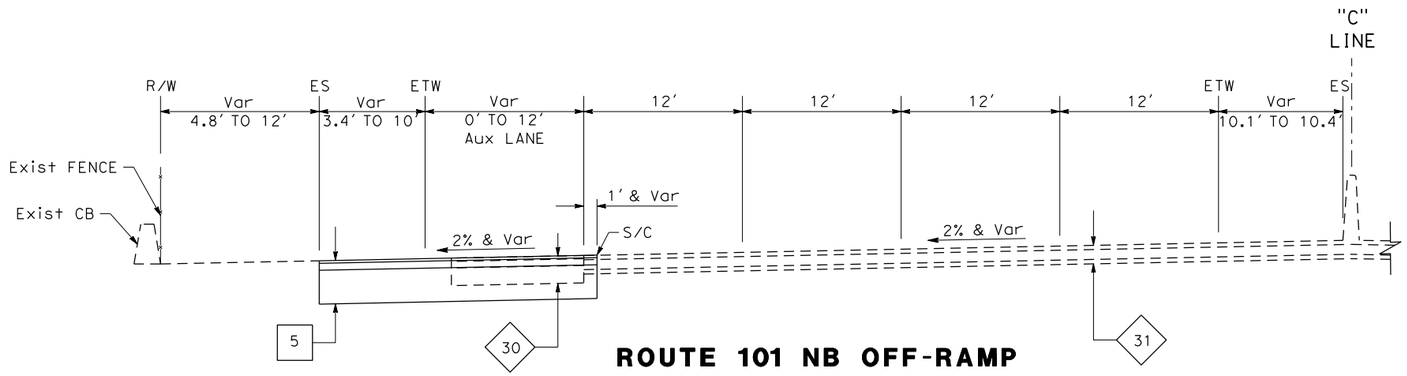

ROUTE 101 NB OFF-RAMP
"C" 388+71 TO "C" 391+61

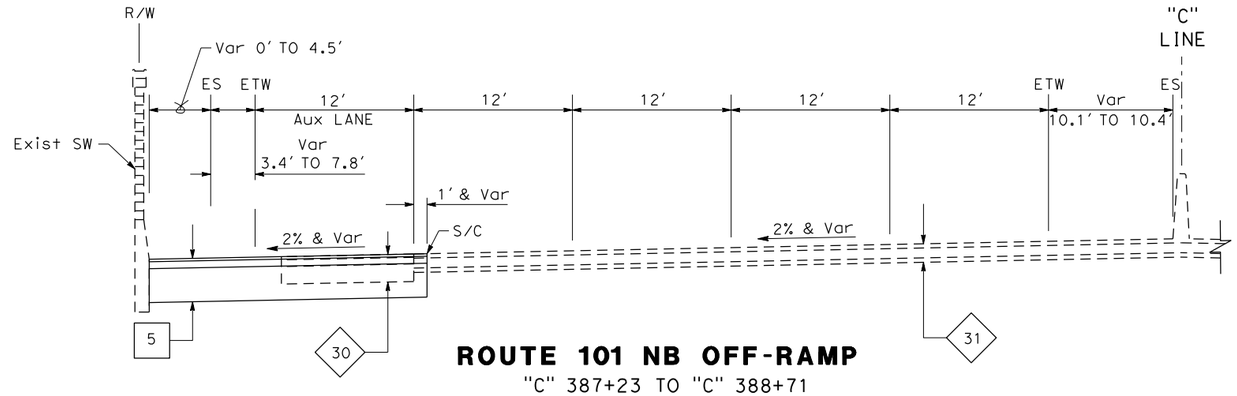

ROUTE 101 NB OFF-RAMP
"C" 387+23 TO "C" 388+71

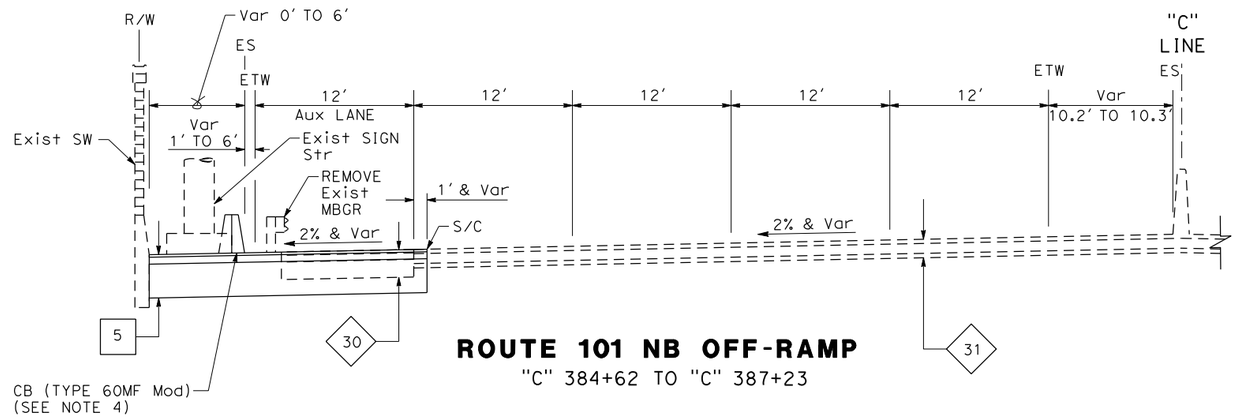

ROUTE 101 NB OFF-RAMP
"C" 384+62 TO "C" 387+23

FOR NOTES, ABBREVIATIONS &/OR LEGEND, SEE SHEETS X-1

TYPICAL CROSS SECTION
NO SCALE

X-9

CALCULATED-DESIGNED BY	STEVE LOUPE	
CHECKED BY	SHAWN VOGTMAN	
CONSULTANT FUNCTIONAL SUPERVISOR	TIMOTHY J. LEE	
REVISED BY	SMD	CR
DATE REVISED	8/13/17	05/03/18

STATE OF CALIFORNIA - DEPARTMENT OF TRANSPORTATION
Caltrans

LAST REVISION 01-15-18
DATE PLOTTED => 6/20/2018
TIME PLOTTED => 10:49:55 AM

X:\237_101_Mathilde\000_CAD\Sheets\CA-XSections\0413000204ca009.dgn

BORDER LAST REVISED 7/2/2010 | USERNAME => Eilif | DGN FILE => 0413000204ca009.dgn | RELATIVE BORDER SCALE IS IN INCHES 0 1 2 3 | UNIT 0000 | PROJECT NUMBER & PHASE 0413000204

Dist	COUNTY	ROUTE	POST MILES TOTAL PROJECT	SHEET No.	TOTAL SHEETS
04	SCL	101,237	45.2/45.8, 2.7/3.3	11	736

6-13-18
REGISTERED CIVIL ENGINEER DATE

6-20-18
PLANS APPROVAL DATE

REGISTERED PROFESSIONAL ENGINEER — STEVE LOUPE — No. 63575 — Exp. 9/30/18 — CIVIL — STATE OF CALIFORNIA

THE STATE OF CALIFORNIA OR ITS OFFICERS OR AGENTS SHALL NOT BE RESPONSIBLE FOR THE ACCURACY OR COMPLETENESS OF SCANNED COPIES OF THIS PLAN SHEET.

WMH CORPORATION
50 W San Fernando St
Suite 950
San Jose, CA 95113

VTA
3331 N First St
Building B
San Jose, Ca 95134

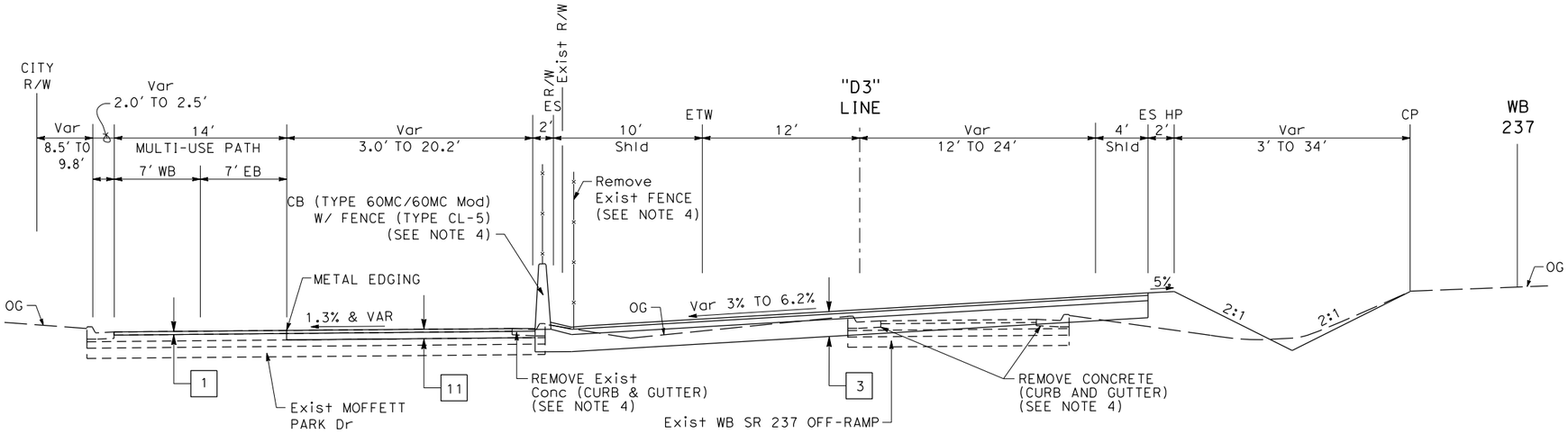

WB SR 237 OFF-RAMP TO MATHILDA Ave

"D3" 12+92 TO "D3" 18+20

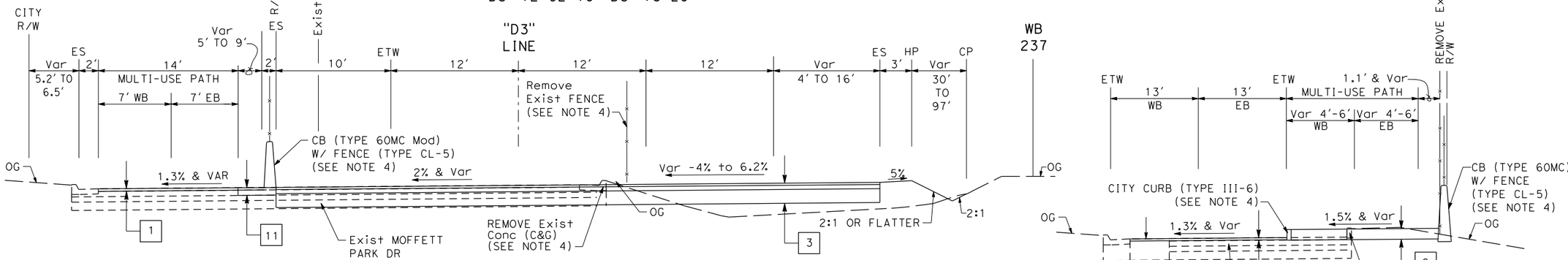

WB SR 237 OFF-RAMP TO MATHILDA Ave

"D3" 10+92 TO "D3" 12+92

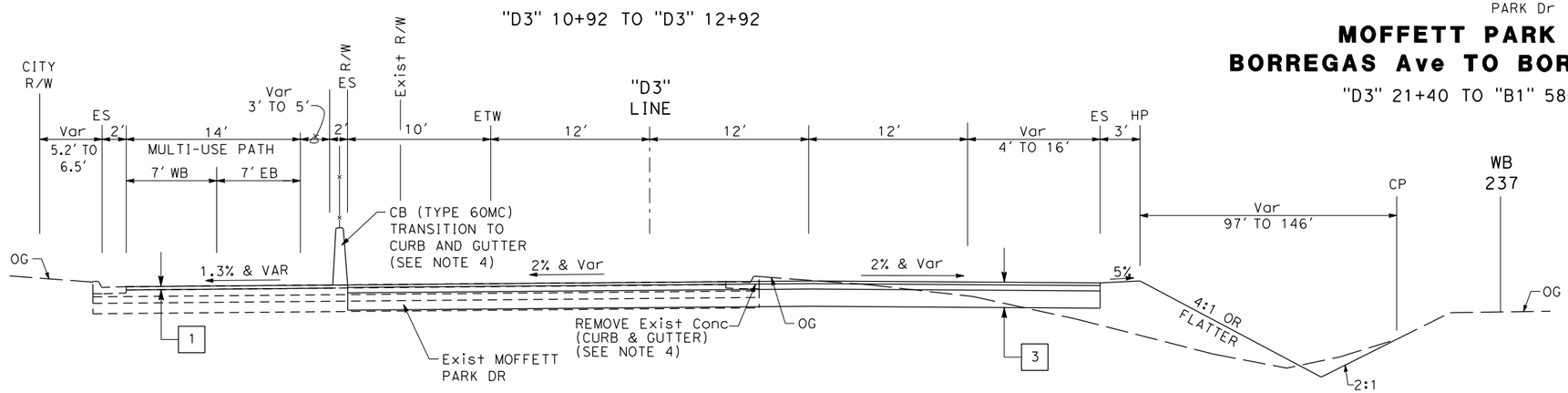

WB SR 237 OFF-RAMP TO MATHILDA Ave

"D3" 10+23 TO "D3" 10+92

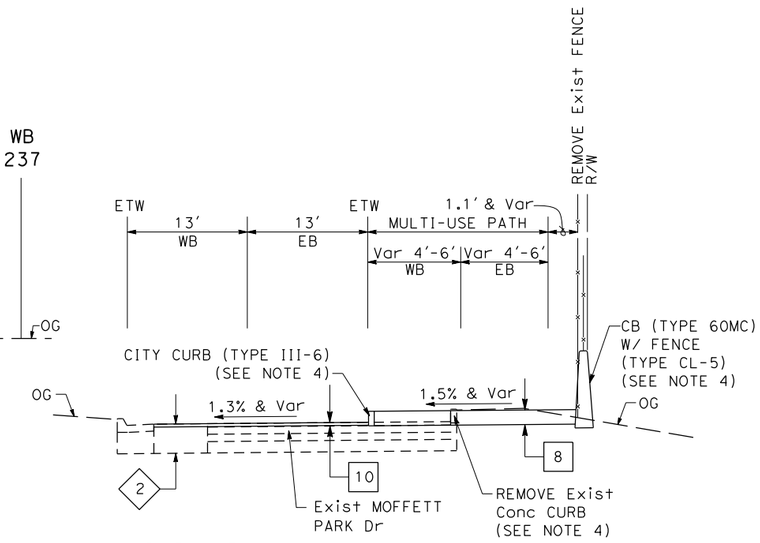

MOFFETT PARK Dr
BORREGAS Ave TO BORDEAUX Dr

"D3" 21+40 TO "B1" 58+72

FOR NOTES, ABBREVIATIONS &/OR LEGEND, SEE SHEETS X-1

TYPICAL CROSS SECTION

NO SCALE

X-10

	DAG	09/20/18
	CR	05/03/18
	SMD	8/13/17
REVISED BY		DATE REVISED
STEVE LOUPE	SHAWN VOGTMAN	
CALCULATED-DESIGNED BY	CHECKED BY	
CONSULTANT FUNCTIONAL SUPERVISOR	TIMOTHY J. LEE	

STATE OF CALIFORNIA - DEPARTMENT OF TRANSPORTATION
Caltrans

LAST REVISION 01-15-18 | DATE PLOTTED => 9/20/2018 | TIME PLOTTED => 11:48:20 AM

X:\237_101_Mathilda\000_CAD\Sheets\CA-XSections\0413000204ca010.dgn

BORDER LAST REVISED 7/2/2010 | USERNAME => Dianneg | DGN FILE => 0413000204ca010.dgn | RELATIVE BORDER SCALE IS IN INCHES 0 1 2 3 | UNIT 0000 | PROJECT NUMBER & PHASE 0413000204

Dist	COUNTY	ROUTE	POST MILES TOTAL PROJECT	SHEET No.	TOTAL SHEETS
04	SCL	101,237	45.2/45.8, 2.7/3.3	12	736

6-13-18
REGISTERED CIVIL ENGINEER DATE

6-20-18
PLANS APPROVAL DATE

REGISTERED PROFESSIONAL ENGINEER — STEVE LOUPE — No. 63575 — Exp. 9/30/18 — CIVIL — STATE OF CALIFORNIA

THE STATE OF CALIFORNIA OR ITS OFFICERS OR AGENTS SHALL NOT BE RESPONSIBLE FOR THE ACCURACY OR COMPLETENESS OF SCANNED COPIES OF THIS PLAN SHEET.

WMH CORPORATION
50 W San Fernando St
Suite 950
San Jose, CA 95113

VTA
3331 N First St
Building B
San Jose, Ca 95134

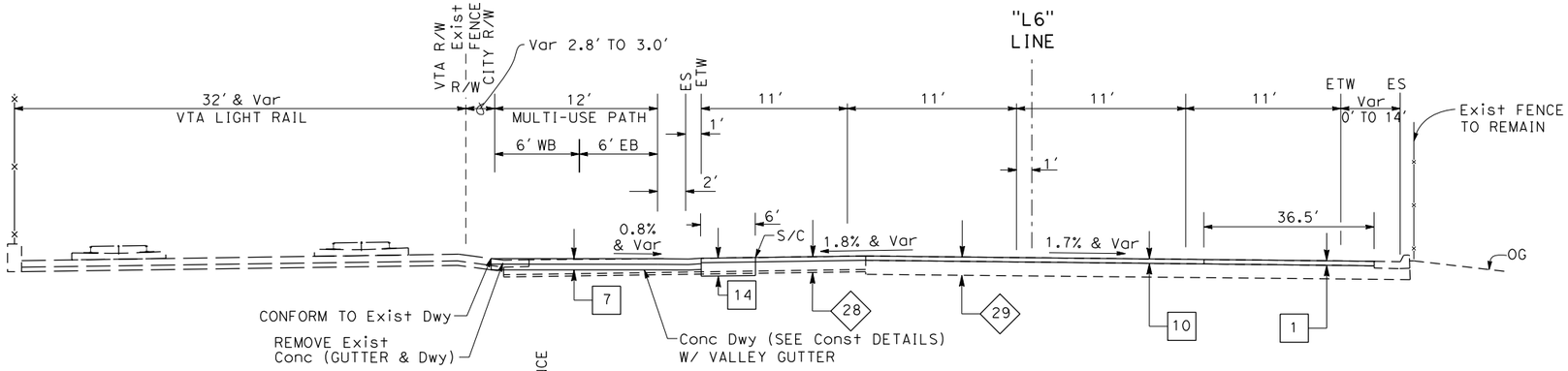

MOFFETT PARK Dr

"L6" 158+38 TO "L6" 158+71

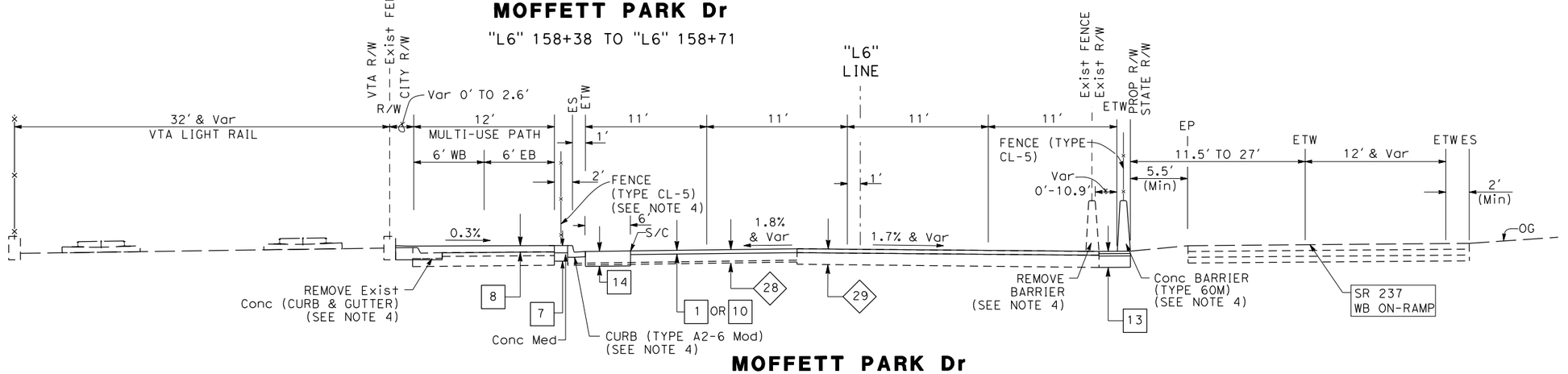

MOFFETT PARK Dr

"L6" 150+15 TO "L6" 158+38

"L6" 158+71 TO "L6" 159+34

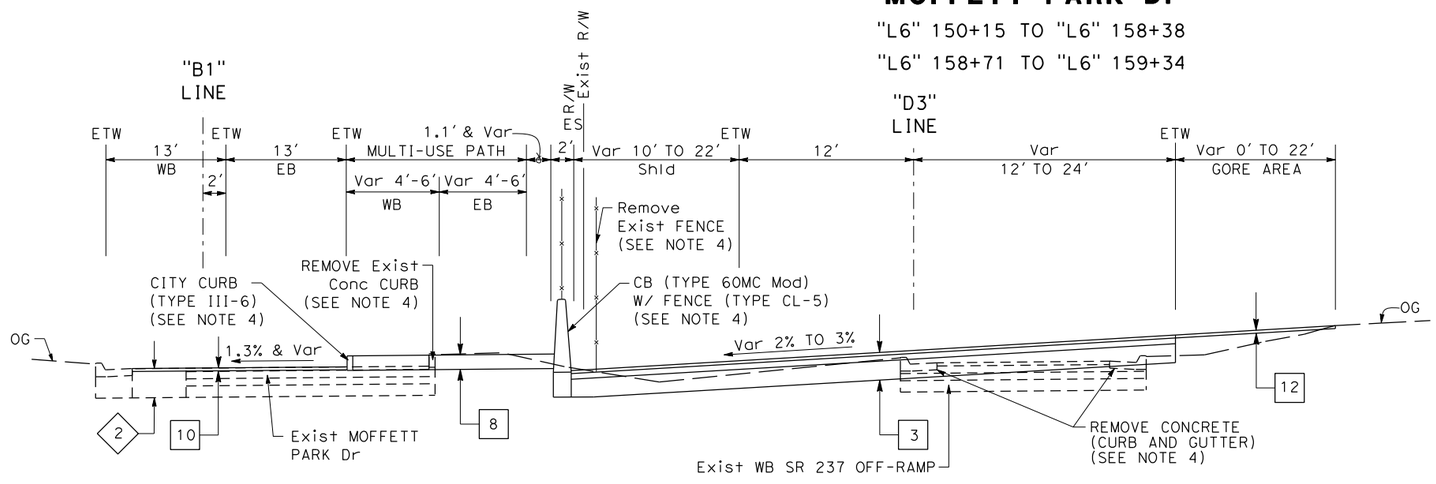

FOR NOTES, ABBREVIATIONS &/OR LEGEND, SEE SHEETS X-1

WB SR 237 OFF-RAMP TO MATHILDA Ave

"D3" 18+20 TO "D3" 21+40

TYPICAL CROSS SECTION

NO SCALE

X-11

	CALCULATED-DESIGNED BY	CHECKED BY	DAG	09/20/18
	STEVE LOUPE	SHAWN VOGTMAN	CR	05/03/18
			SMD	8/13/17
			REVISED BY	DATE REVISED

CONSULTANT FUNCTIONAL SUPERVISOR: TIMOTHY J. LEE

STATE OF CALIFORNIA - DEPARTMENT OF TRANSPORTATION

Caltrans

LAST REVISION 01-15-18 | DATE PLOTTED => 9/20/2018 | TIME PLOTTED => 11:47:12 AM

x:\237_101_Mathilda\000_CAD\Sheets\CA-XSections\0413000204ca011.dgn

BORDER LAST REVISED 7/2/2010 | USERNAME => Dianneg | DGN FILE => 0413000204ca011.dgn | RELATIVE BORDER SCALE IS IN INCHES 0 1 2 3 | UNIT 0000 | PROJECT NUMBER & PHASE 0413000204

NOTE:

UTILITY, PAVEMENT DELINEATION, AND SIGN PLANS ALL FOLLOW THE SAME SHEET NUMBERING AS LAYOUT SHEETS L-1 THROUGH L-10.

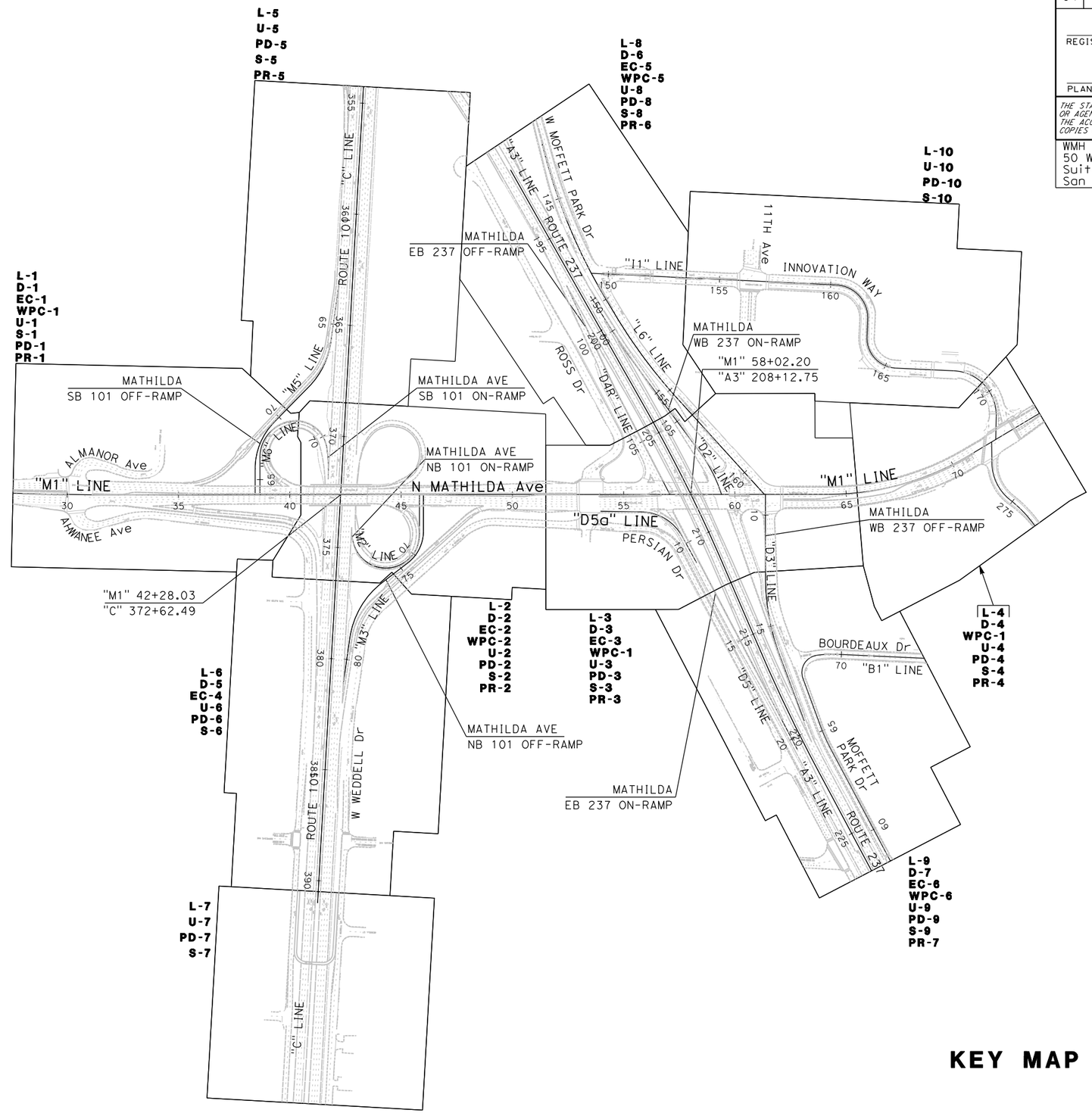

Dist	COUNTY	ROUTE	POST MILES TOTAL PROJECT	SHEET No.	TOTAL SHEETS
04	SCL	101,237	45.2/45.8, 2.7/3.3	13	736

6-13-18
REGISTERED CIVIL ENGINEER — DATE

6-20-18
PLANS APPROVAL DATE

REGISTERED PROFESSIONAL ENGINEER — STEVE LOUPE — No. 63575 — Exp. 9/30/18 — CIVIL — STATE OF CALIFORNIA

THE STATE OF CALIFORNIA OR ITS OFFICERS OR AGENTS SHALL NOT BE RESPONSIBLE FOR THE ACCURACY OR COMPLETENESS OF SCANNED COPIES OF THIS PLAN SHEET.

WMH CORPORATION 50 W San Fernando St Suite 950 San Jose, CA 95113	VTA 3331 N First St Building B San Jose, Ca 95134

KEY MAP AND LINE INDEX

NO SCALE

K-1

CALCULATED-DESIGNED BY	SHAWN VOGTMAN
CHECKED BY	STEVE LOUPE
REVISED BY	
DATE REVISED	
CONSULTANT FUNCTIONAL SUPERVISOR	TIMOTHY J. LEE
STATE OF CALIFORNIA - DEPARTMENT OF TRANSPORTATION	Caltrans

LAST REVISION 01-15-18
DATE PLOTTED => 6/20/2018
TIME PLOTTED => 10:52:05 AM

X:\237_101_Mathilda\000_CAD\Sheets\DA-Keymap\0413000204da001.dgn

BORDER LAST REVISED 7/2/2010 | USERNAME => Eilif | DGN FILE => 0413000204da001.dgn | RELATIVE BORDER SCALE IS IN INCHES 0 1 2 3 | UNIT 0000 | PROJECT NUMBER & PHASE 0413000204

Dist	COUNTY	ROUTE	POST MILES TOTAL PROJECT	SHEET No.	TOTAL SHEETS
04	SCL	101,237	45.2/45.8, 2.7/3.3	14	736

(signature below)

PROFESSIONAL LAND SURVEYOR DATE

6-20-18

PLANS APPROVAL DATE

PROFESSIONAL LAND SURVEYOR CODY J FESTA No. LS9340 Exp. 3/31/19 STATE OF CALIFORNIA

THE STATE OF CALIFORNIA OR ITS OFFICERS OR AGENTS SHALL NOT BE RESPONSIBLE FOR THE ACCURACY OR COMPLETENESS OF SCANNED COPIES OF THIS PLAN SHEET.

WMH CORPORATION 50 W San Fernando St Suite 950 San Jose, CA 95113	VTA 3331 N First St Building B San Jose, Ca 95134

CONTROL FOR DESIGN AND CONSTRUCTION

NO.	RSE #	NORTHING	EASTING	ELEVATION	COMBINED SCALE FACTOR	DESCRIPTION
1	1000	1970150.43	6117599.71	38.88	0.99995157	CUT 'X' ON CENTER MEDIAN
2	1001	1970695.58	6117791.95	34.55	0.99995162	CUT 'X' ON SIDEWALK
3	1002	1971357.42	6117937.56	53.77	0.99995051	CUT 'X' ON SIDEWALK
4	1003	1971365.50	6117853.50	53.89	0.99995050	CUT 'X' ON SIDEWALK
5	1004	1971756.61	6118259.92	29.81	0.99995153	CUT 'X' ON CURB
6	1005	1971703.72	6118023.09	39.49	0.99995109	CUT 'X' ON CURB
7	1006	1971529.96	6118347.84	31.18	0.99995153	CUT 'X' ON CURB
8	1008	1972218.32	6118090.02	30.83	0.99995135	CUT 'X' ON DECORATIVE STONE SURFACE ON CENTER MEDIAN
9	1009	1972431.49	6118305.63	26.47	0.99995150	CUT 'X' ON CURB
10	1010	1972504.97	6118242.19	27.24	0.99995144	CUT 'X' ON CURB
11	1011	1972968.21	6118206.32	24.15	0.99995145	CUT 'X' ON CONCRETE FOUNDATION OF LIGHT POLE
12	1012	1972944.86	6117906.95	25.96	0.99995137	CUT 'X' ON CURB
13	1013	1973148.49	6119046.72	21.39	0.99995153	'+' ON ALUMINUM DISK STAMPED "RSE SURVEY CONTROL POINT"
14	1014	1973146.08	6118614.86	22.26	0.99995149	'+' ON ALUMINUM DISK STAMPED "RSE SURVEY CONTROL POINT"
15	1015	1973774.17	6118476.36	19.18	0.99995146	CUT 'X' BETWEEN EDGE OF ROAD AND GUTTER LINE
16	1016	1972722.94	6117224.48	30.88	0.99995121	CUT 'X' ON CURB
17	1017	1972831.45	6117544.68	28.46	0.99995129	'+' ON ALUMINUM DISK STAMPED "RSE SURVEY CONTROL POINT"
18	1018	1973750.07	6119203.76	16.26	0.99995160	MAG SURVEY SPIKE AND WASHER STAMPED "RSE SURVEY CONTROL POINT"
19	1019	1974052.08	6119298.03	14.90	0.99995158	CUT 'X' ON CURB
20	1020	1974518.23	6119166.60	17.59	0.99995131	CUT 'X' ON CURB
21	1021	1974258.72	6118444.50	18.60	0.99995134	CUT 'X' ON CURB
22	1022	1974366.41	6118242.38	18.40	0.99995132	PUNCHED '•' ON BRASS DISK STAMPED "SCVWD SUN 038 R 2001"
23	1023	1974236.52	6117999.35	18.81	0.99995134	CUT 'X' ON CURB
24	1024	1973780.30	6117809.73	20.77	0.99995138	CUT 'X' ON CURB
25	1025	1973457.79	6117357.07	24.25	0.99995131	CUT 'X' ON CURB
26	1026	1973042.39	6117281.10	27.11	0.99995129	PUNCHED 'F' ON ALUMINUM DISK STAMPED "PARCEL D AP3 AP2 PARCEL E 2011"
27	1027	1972823.30	6118308.66	25.11	0.99995145	RED PLASTIC CAP STAMPED "RSE CONTROL"
28	1028	1973259.23	6118408.43	22.27	0.99995146	PUNCHED '•' ON BRASS DISK STAMPED "SCVWD BM 487 2001"
29	1029	1971263.20	6117915.77	53.58	0.99995054	CUT 'X' ON SIDEWALK
30	1030	1970853.56	6119899.33	33.12	0.99995163	CUT 'X' ON DECORATIVE STONE SURFACE
31	1031	1970889.54	6119779.40	33.31	0.99995161	CUT 'X' ON DECORATIVE STONE SURFACE
32	1032	1971046.89	6119387.98	29.19	0.99995177	PUNCHED '•' ON BRASS DISK STAMPED "LS6441"
33	1033	1971275.64	6118571.66	32.71	0.99995153	CUT 'X' ON CURB
34	1034	1971960.38	6118146.89	30.24	0.99995145	CUT 'X' ON CURB
35	1035	1972750.36	6118296.18	26.10	0.99995142	CUT 'X' ON SIDEWALK
36	1036	1973259.49	6119539.99	19.95	0.99995156	MAG NAIL AND SHINER SET INTO ASPHALT
37	1037	1973355.82	6120005.68	18.70	0.99995159	MAD NAIL AND SHINER SET INTO ASPHALT
38	1038	1970162.80	6117534.66	36.81	0.99995167	BRASS DISK STAMPED "SUN 064"

NOTES:

1. BASIS OF HORIZONTAL CONTROL:
COORDINATES OF RSE-SET CONTROL POINTS ARE DERIVED FORM PRIMARY CONTROL POINT POSITIONAL VALUES PUBLISHED BY MICHAEL BAKER INTERNATIONAL, LLC IN THEIR REPORT TITLED "SURVEY CONTROL FOR PHOTOGRAMMETRIC MAPPING, MATHILDA AVENUE IMPROVEMENTS, US 101/SR 237, SANTA CLARA COUNTY" AND DATED 9 APRIL 2015, PROVIDED BY WMH, INC. AS THE BASIS FOR ALL SURVEY DATA. FROM PRIMARY CONTROL POINTS 1873 AND 3001, FAST-STATIC GNSS BASELINE VECTORS WERE MEASURED TO RSE-SET POINTS USING LEICA GS15 AND GS08 ANTENNAE. IN ADDITION, TRAVERSE MEASUREMENTS WERE RECORDED BETWEEN ALL INTERVISIBLE POINTS USING A LEICA TS50 TOTAL STATION. A FULLY-CONSTRAINED ADJUSTMENT OF ALL MEASUREMENTS WAS PERFORMED USING STAR*NET® LEAST SQUARES ADJUSTMENT SOFTWARE, VERSION 7.1; THE POSITIONAL VALUES OF THE ABOVEMENTIONED PRIMARY POINTS WERE HELD FIXED IN SAID ADJUSTMENT. CONFORMING WITH MICHAEL BAKER'S SURVEY REPORT, COORDINATES ARE EXPRESSED IN US FEET AND ARE IN TERMS OF THE NORTH AMERICAN DATUM OF 1983 (NAD83), ZONE 3 OF THE CALIFORNIA COORDINATE SYSTEM (CCS), AND EPOCH 2010.00 THEREOF.

2. BASIS OF ELEVATION:
ELEVATIONS ARE IN TERMS OF THE NORTH AMERICA DATUM OF 1988 (NAD88) AND CORRESPOND TO VALUES PUBLISHED BY THE SANTA CLARA VALLEY WATER DISTRICT (SCVWD) AND THAT AGENCY'S VERTICAL SURVEY CONTROL NETWORK; VALUES ARE ALSO EXPRESSED IN US FEET. DIFFERENTIAL LEVEL MEASUREMENTS WERE RECORDED TO AND FROM ALL SURVEY CONTROL POINTS USING A LEICA DNA03 DIGITAL LEVEL. A FULLY-CONSTRAINED ADJUSTMENT OF ALL LEVEL MEASUREMENTS WAS PERFORMED USING STAR*NET® LEAST SQUARES ADJUSTMENT SOFTWARE, VERSION 7.1. ELEVATIONS OF THE FOLLOWING SCVWD BENCHMARKS WERE HELD FIXED IN SAID ADJUSTMENT: BM180, BM483, BM487, BM902, AND BM915. BENCHMARK DATASHEETS CAN BE OBTAINED THROUGH THE SCVWD'S VERTICAL CONTROL DATABASE AT HTTP://WWW.VALLEYWATER.ORG/SERVICES/VCN.ASPX

LEGEND:

● SET TRAVERSE POINT

▲ FOUND MONUMENT

PROFESSIONAL LAND SURVEYOR CODY J FESTA LS9340 EXP. 3/31/2019 STATE OF CALIFORNIA

THIS PLAN ACCURATE FOR PROJECT CONTROL ONLY.

PROJECT CONTROL

SCALE: 1"=400'

PC-1

STATE OF CALIFORNIA - DEPARTMENT OF TRANSPORTATION

Caltrans®

CONSULTANT FUNCTIONAL SUPERVISOR: TIMOTHY J. LEE

CALCULATED-DESIGNED BY: SHAWN VOGTMAN

CHECKED BY: STEVE LOUPE

REVISED BY: SCV

DATE REVISED: 01/15/18

X:\237_101_Mathilda\000_CAD\Sheets\DC-Project_Control\0413000204dc001.dgn

LAST REVISION 01-15-18

DATE PLOTTED => 6/20/2018

TIME PLOTTED => 10:52:26 AM

BORDER LAST REVISED 7/2/2010

USERNAME => Eilif

DGN FILE => 0413000204dc001.dgn

RELATIVE BORDER SCALE IS IN INCHES 0 1 2 3

UNIT 0000

PROJECT NUMBER & PHASE 0413000204

Dist	COUNTY	ROUTE	POST MILES TOTAL PROJECT	SHEET No.	TOTAL SHEETS
04	SCL	101,237	45.2/45.8, 2.7/3.3	15	736

REGISTERED CIVIL ENGINEER — DATE: 6-13-18

PLANS APPROVAL DATE: 6-20-18

REGISTERED PROFESSIONAL ENGINEER — STEVE LOUPE — No. 63575 — Exp. 9/30/20 — CIVIL — STATE OF CALIFORNIA

THE STATE OF CALIFORNIA OR ITS OFFICERS OR AGENTS SHALL NOT BE RESPONSIBLE FOR THE ACCURACY OR COMPLETENESS OF SCANNED COPIES OF THIS PLAN SHEET.

WMH CORPORATION 50 W San Fernando St Suite 950 San Jose, CA 95113	VTA 3331 N First St Building B San Jose, Ca 95134

NOTE:

1. FOR ACCURATE RIGHT OF WAY DATA, CONTACT RIGHT OF WAY ENGINEERING AT THE DISTRICT OFFICE.
2. COORDINATES, DISTANCES, AND BEARINGS SHOWN ARE BASED ON NORTH AMERICAN DATUM OF 1983 (NAD 83), EPOCH 2014.55 CALIFORNIA COORDINATE SYSTEM, ZONE 3. ELEVATIONS ARE BASED ON NORTH AMERICAN VERTICAL DATUM 1988 (NAVD 88). ALL DIMENSTIONS AND COORDINATES ARE IN US SURVEY FEET.
3. ALL CURB LOCATIONS ARE CALLED AT THE FLOWLINE OF THE CURB.
4. SEE CONSTRUCTION DETAILS FOR REMOVAL PLANS.
5. FOR MATERIAL WITH AERIALLY DEPOSITED LEAD (EXISTING) SEE CONSTRUCTION DETAIL SHEETS.
6. IF ANY CITY OF SUNNYVALE MONUMENTS ARE TO BE REMOVED OR DESTROYED, THE REPLACEMENT MONUMENTS WILL BE ESTABLISHED AS DIRECTED BY AN APPROVED SURVEYING COMPANY. SUCH NEW LOCATIONS MAY OR MAY NOT BE IN ORIGINAL LOCATIONS.
7. SEE CONSTRUCTION DETAILS FOR ADDITIONAL GEOMETRIC DETAILS.

LEGEND:

- (#) CURVE DATA
- EASEMENT/TCE
- Exist RIGHT OF WAY, RIGHT OF WAY, PROPERTY LINE
- IRRIGATION CONDUIT
- (#) PAVEMENT STRUCTURAL SECTION
- COLD PLANE AC PAVEMENT AND RESURFACE
- VEGETATION CONTROL (MINOR CONCRETE)
- IRRIGATION CROSSOVER
- SURVEY MONUMENT

ABBREVIATIONS:

AFTS	ALTERNATE FLARED TERMINAL SYSTEM
AITS	ALTERNATE IN-LINE TERMINAL SYSTEM
C&G	CURB AND GUTTER
SFPUC	SAN FRANCISCO PUBLIC UTILITY COMMISSION
TCE	TEMPORARY CONSTRUCTION EASEMENT
BMGS (TYPE)	BEGIN MIDWEST GUARDRAIL SYSTEM (TYPE)
EMGS	END MIDWEST GUARDRAIL SYSTEM (TYPE)
Veg Ctrl	VEGETATION CONTROL (Minor Conc)
TR (TYPE)	TRANSITION RAILING (TYPE)
EAA	END ANCHOR ASSEMBLY

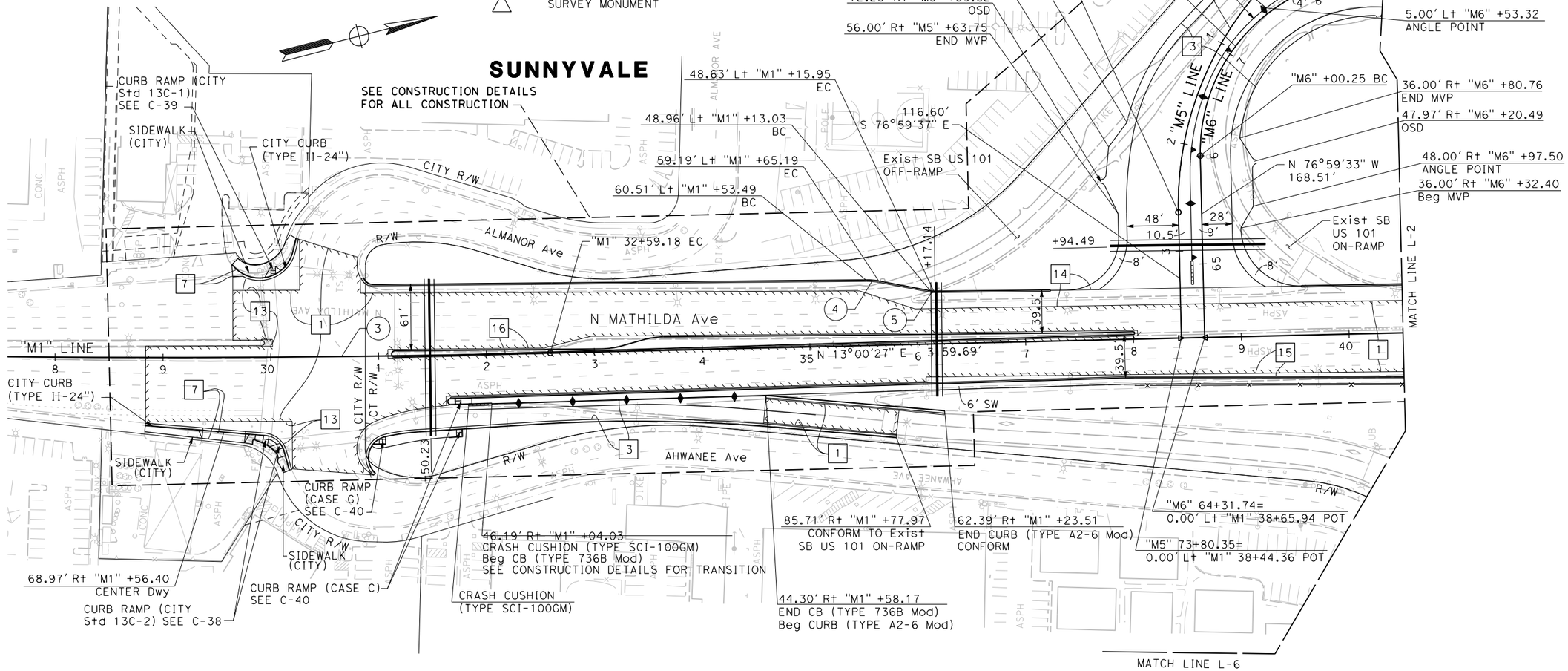

CURVE DATA

No. Ⓗ	R	Δ	T	L
1	300.00'	44°27'26"	112.60'	232.78'
2	162.00'	94°02'38"	173.86'	265.90'
3	15263.97'	2°34'45"	343.61'	687.11'
4	60.00'	11°15'53"	5.92'	11.80'
5	15.00'	11°15'53"	1.48'	2.95'

LAYOUT

SCALE: 1" = 50'

L-1

	SMD	09/21/18		
	SCV	05/03/18		
	REVISED BY	DATE REVISED		
CALCULATED-DESIGNED BY	SHAWN VOGTMAN	STEVE LOUPE		
CHECKED BY				

STATE OF CALIFORNIA - DEPARTMENT OF TRANSPORTATION — Caltrans®

CONSULTANT FUNCTIONAL SUPERVISOR: TIMOTHY J. LEE

X:\237_101_Mathilda\000_CAD\Sheets\V000_Submittals\Conformed Plans\0413000204ea001.dgn

LAST REVISION: 01-15-18 — DATE PLOTTED => 12/3/2018 — TIME PLOTTED => 12:20:41 PM

BORDER LAST REVISED 7/2/2010 | USERNAME => eilif | DGN FILE => 0413000204ea001.dgn | RELATIVE BORDER SCALE IS IN INCHES 0 1 2 3 | UNIT 0000 | PROJECT NUMBER & PHASE 0413000204

NOTE:

FOR ACCURATE RIGHT OF WAY DATA, CONTACT
RIGHT OF WAY ENGINEERING AT THE DISTRICT OFFICE.

CURVE DATA

No. ⑪	R	Δ	T	L
6	180.00′	52°31′14"	88.81′	165.00′
7	151.00′	160°29′50"	878.64′	422.98′
8	200.00′	22°52′01"	40.45′	79.82′
9	240.00′	46°41′26"	103.59′	195.58′
10	137.72′	77°07′50"	109.80′	185.40′
11	618.07′	9°32′24"	51.57′	102.91′
12	32.00′	45°49′34"	13.42′	25.59′
13	70.00′	39°28′5"	24.98′	48.22′

Dist	COUNTY	ROUTE	POST MILES TOTAL PROJECT	SHEET No.	TOTAL SHEETS
04	SCL	101,237	45.2/45.8, 2.7/3.3	16	736

6-13-18
REGISTERED CIVIL ENGINEER — DATE

REGISTERED PROFESSIONAL ENGINEER — STEVE LOUPE — No. 63575 — Exp. 9/30/20 — CIVIL — STATE OF CALIFORNIA

6-20-18
PLANS APPROVAL DATE

THE STATE OF CALIFORNIA OR ITS OFFICERS OR AGENTS SHALL NOT BE RESPONSIBLE FOR THE ACCURACY OR COMPLETENESS OF SCANNED COPIES OF THIS PLAN SHEET.

WMH CORPORATION
50 W San Fernando St
Suite 950
San Jose, CA 95113

VTA
3331 N First St
Building B
San Jose, Ca 95134

MATCH LINE L-5

0.00′ Rt "M6" +00.00
CONFORM TO Exist
SB US 101 ON-RAMP

"M6" LINE

"M6" 71+54.46 EC
39.61′ S 76°16′41" E

"M6" 71+94.08=
56.5′ Rt "C" 371+94.08 POT

"C" +8.28
BMGS (TYPE 16B)

44.49′ Lt "M1" +09.56
END CB (TYPE 736A Mod)
Beg CB (TYPE 736 Mod)

44.18′ Lt "M1" +92.55
Beg CB (TYPE 736A Mod)

"M6" 70+51.55
PCC

SB

NB

S 73°43′03" E 3710

2372.88′

"C" LINE

AFTS

+8.28

MATHILDA Ave OC
Br No. 37-0177
"M1" 42+28.03 (MATHILDA Ave)
"C" 372+62.49 (US ROUTE 101)

"M1" LINE

47.81′ Rt "M1" +86.94
END CL-6

47.86′ Rt "M1" +04.67
Beg CB (TYPE 732SW Mod)

"C" +35.18
EMGS (TYPE 16B)
EAA (TYPE SFT)

5.6′ SW

85.5′

72.33′ Lt "C" +62.27
CONFORM TO Exist
Beg S/C

72.16′ Lt "C" +84.54
Beg MVP

84.02′ Lt "C" +04.63
ANGLE POINT/ S/C

"M2" 67+28.49=
0.00′ Rt "M1" 45+82.48 POT

83.69′ Lt "C" +49.63
ANGLE POINT
END S/C

71.54′ Lt "C" +69.54
END MVP

"C" +3.11
EMGS (TYPE 16B)
EAA (TYPE SFT)

44.49′ Lt "M1" +51.28
END CB (TYPE 736 Mod)
Beg CB (TYPE 736A Mod)

45.28′ Lt "M1" +68.62
END CB (TYPE 736A Mod)
Beg CB (TYPE 736B)

50.51′ Lt "M1" +74.27
END CB (TYPE 736B)
Beg CB (TYPE 60MC)

"C" +6.78
BMGS (TYPE 16B)

46.41′ Rt "M1" +03.08
ANGLE POINT

48.87′ Rt "M1" +63.41
END CB (TYPE 732SW Mod)

+63.99

AFTS

178.74′ S 76°59′33" E

Exist NB US 101
OFF-RAMP

50.80′ Lt "M1" +24.23
END CB (TYPE 60MC)
Beg CURB (TYPE A2-6 Mod)
BMGS (TYPE 12A)

"M3" 71+32.53=
0.0′ Rt "M1" 46+00.48 POT

51.80′ Lt "M1" 25+42
ANGLE POINT

HETCH HETCHY AQUEDUCTS

SEE CONSTRUCTION DETAILS
FOR ALL CONSTRUCTION

Exist BUS STOP

51.30′ Lt "M1" +60.94
END CURB (TYPE A2-6 Mod)
EMGS

12.30′ Lt "M1" +56.76, EC
Beg BAY TAPER

5.76′ Lt "M1" +48.64
END BAY TAPER

SFPUC Ease
1.80′ Lt "M1" +99.98, BC
END BAY TAPER

4.73′ Rt "M1" +90.34
Beg BAY TAPER

AITS R/W

N MATHILDA Ave

3159.69′ N 13°00′27" E

MATCH LINE L-3

45 CURB RAMP (CASE A) SEE C-41

CURB RAMP (CASE A) SEE C-42

PROPOSED BUS STOP
SEE Const DETAILS

54.23′ Rt "M1" +90.29, BC

BENCH INSTALLED BY OTHERS

CRASH CUSHION (TYPE SCI-100GM)
10.00′ Rt "M3" +26.61
Beg CB (TYPE 60MC)
163.86′
S 76°59′33" E

W WEDDELL Dr

R/W

6.5′ SW

+70.14

"M2" 74+10.03=
58.5′ Lt "C" 374+10.03 EC

CONFORM TO Exist
NB US 101 ON-RAMP

MATCH LINE L-1

"M2" 73+30.21 PCC

5.00′ Lt "M2" +95.00
EMGS

ROUTE 101

"M2" 69+07.23 BC
38.00′ Rt "M2" +24.47
Beg MVP

38.00′ Rt "M2" +60.92
ANGLE POINT

50.00′ Rt "M2" +19.63
OSD

38.00′ Rt
"M2" +30.96
END MVP

"M2" LINE

+15.64

"M3" LINE

57.80′ Lt "M3" +90.00
Beg Ret WALL No. 1

"M3" 72+96.39 BC

CB (TYPE 60MC)

Exist NB US 101
OFF-RAMP

"M3" 74+61.39 EC

Ret WALL No. 1

145.31′
S 24°28′19" E

63.95′ Rt "M1" +15.44
END CL-6

73.41′ Rt "M1" +46.83, PCC
FL 29.38

79.78′ Rt "M1" +72.41, EC
FL 28.99

SFPUC R/W

MGS (TYPE 12DD LAYOUT)

25.57′ Rt "M3" +38.26
END CB (TYPE 60MC)
Beg MGS
ANGLE POINT

MATCH LINE L-6

FOR NOTES AND LEGEND,
SEE SHEET L-1

LAYOUT

SCALE: 1" = 50′

L-2

	REVISED BY	DATE REVISED
	SMD	09/21/18
	SCV	05/03/18

CALCULATED-
DESIGNED BY: SHAWN VOGTMAN
CHECKED BY: STEVE LOUPE

CONSULTANT FUNCTIONAL SUPERVISOR: TIMOTHY J. LEE

STATE OF CALIFORNIA - DEPARTMENT OF TRANSPORTATION
Caltrans

X:\237_101_Mathilda\000_CAD\Sheets\000_Submittals\Conformed Plans\0413000204ea002.dgn

LAST REVISION 01-15-18 | DATE PLOTTED => 12/3/2018 | TIME PLOTTED => 12:20:42 PM

BORDER LAST REVISED 7/2/2010 | USERNAME => eilif | DGN FILE => 0413000204ea002.dgn | RELATIVE BORDER SCALE IS IN INCHES 0 1 2 3 | UNIT 0000 | PROJECT NUMBER & PHASE 0413000204

Dist	COUNTY	ROUTE	POST MILES TOTAL PROJECT	SHEET No.	TOTAL SHEETS
04	SCL	101,237	45.2/45.8, 2.7/3.3	17	736

REGISTERED CIVIL ENGINEER — 6-13-18 DATE

STEVE LOUPE No. 63575 Exp. 9/30/20 CIVIL — REGISTERED PROFESSIONAL ENGINEER — STATE OF CALIFORNIA

6-20-18
PLANS APPROVAL DATE

THE STATE OF CALIFORNIA OR ITS OFFICERS OR AGENTS SHALL NOT BE RESPONSIBLE FOR THE ACCURACY OR COMPLETENESS OF SCANNED COPIES OF THIS PLAN SHEET.

WMH CORPORATION
50 W San Fernando St
Suite 950
San Jose, CA 95113

VTA
3331 N First St
Building B
San Jose, Ca 95134

NOTE:
FOR ACCURATE RIGHT OF WAY DATA, CONTACT RIGHT OF WAY ENGINEERING AT THE DISTRICT OFFICE.

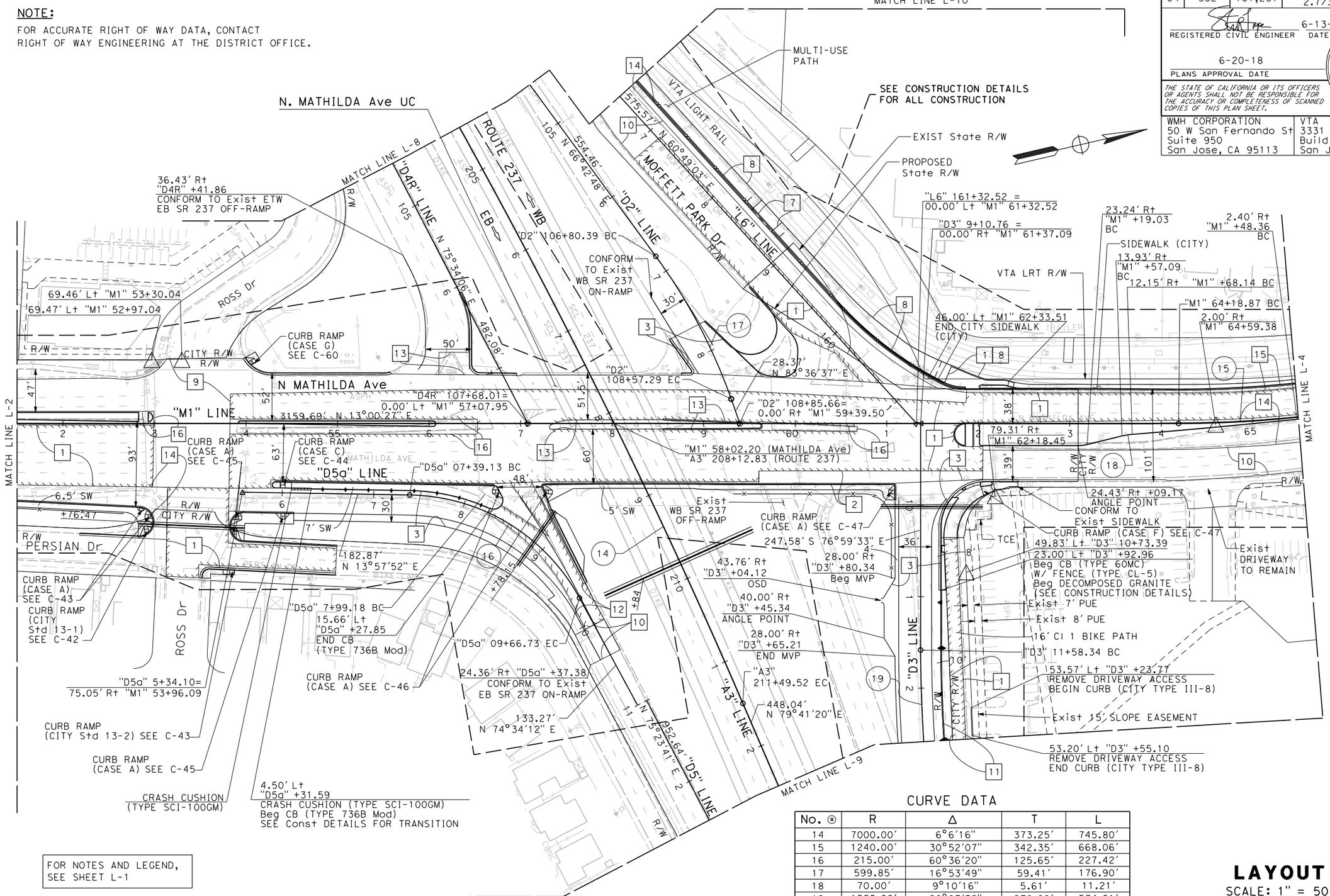

FOR NOTES AND LEGEND, SEE SHEET L-1

CURVE DATA

No. Ⓟ	R	Δ	T	L
14	7000.00′	6°6′16"	373.25′	745.80′
15	1240.00′	30°52′07"	342.35′	668.06′
16	215.00′	60°36′20"	125.65′	227.42′
17	599.85′	16°53′49"	59.41′	176.90′
18	70.00′	9°10′16"	5.61′	11.21′
19	1522.00′	20°07′32"	270.09′	534.61′

LAYOUT
SCALE: 1" = 50′

L-3

	SMD	09/21/18	
	SCV	05/03/18	
	REVISED BY	DATE REVISED	
SHAWN VOGTMAN	STEVE LOUPE		
CALCULATED-DESIGNED BY	CHECKED BY		

TIMOTHY J. LEE — CONSULTANT FUNCTIONAL SUPERVISOR

STATE OF CALIFORNIA - DEPARTMENT OF TRANSPORTATION — Caltrans

X:\237_101_Mathilda\000_CAD\Sheets\000_Submittals\Conformed Plans\0413000204ea003.dgn

LAST REVISION 01-15-18 | DATE PLOTTED => 12/3/2018 | TIME PLOTTED => 12:20:44 PM

BORDER LAST REVISED 7/2/2010 | USERNAME => eilif | DGN FILE => 0413000204ea003.dgn | RELATIVE BORDER SCALE IS IN INCHES 0 1 2 3 | UNIT 0000 | PROJECT NUMBER & PHASE 0413000204

Dist	COUNTY	ROUTE	POST MILES TOTAL PROJECT	SHEET No.	TOTAL SHEETS
04	SCL	101,237	45.2/45.8, 2.7/3.3	18	736

REGISTERED CIVIL ENGINEER 6-13-18 DATE

6-20-18
PLANS APPROVAL DATE

REGISTERED PROFESSIONAL ENGINEER STEVE LOUPE No. 63575 Exp. 9/30/20 CIVIL STATE OF CALIFORNIA

THE STATE OF CALIFORNIA OR ITS OFFICERS OR AGENTS SHALL NOT BE RESPONSIBLE FOR THE ACCURACY OR COMPLETENESS OF SCANNED COPIES OF THIS PLAN SHEET.

WMH CORPORATION
50 W San Fernando St
Suite 950
San Jose, CA 95113

VTA
3331 N First St
Building B
San Jose, Ca 95134

NOTE:
FOR ACCURATE RIGHT OF WAY DATA, CONTACT RIGHT OF WAY ENGINEERING AT THE DISTRICT OFFICE.

CURVE DATA

No. ⊛	R	Δ	T	L
21	1240.00′	30°52′07"	342.35′	668.06′
22	580.50′	24°40′46"	126.99′	250.04′
23	212.50′	51°00′18"	101.37′	189.17′
24	199.97′	88°43′44"	195.58′	309.68′

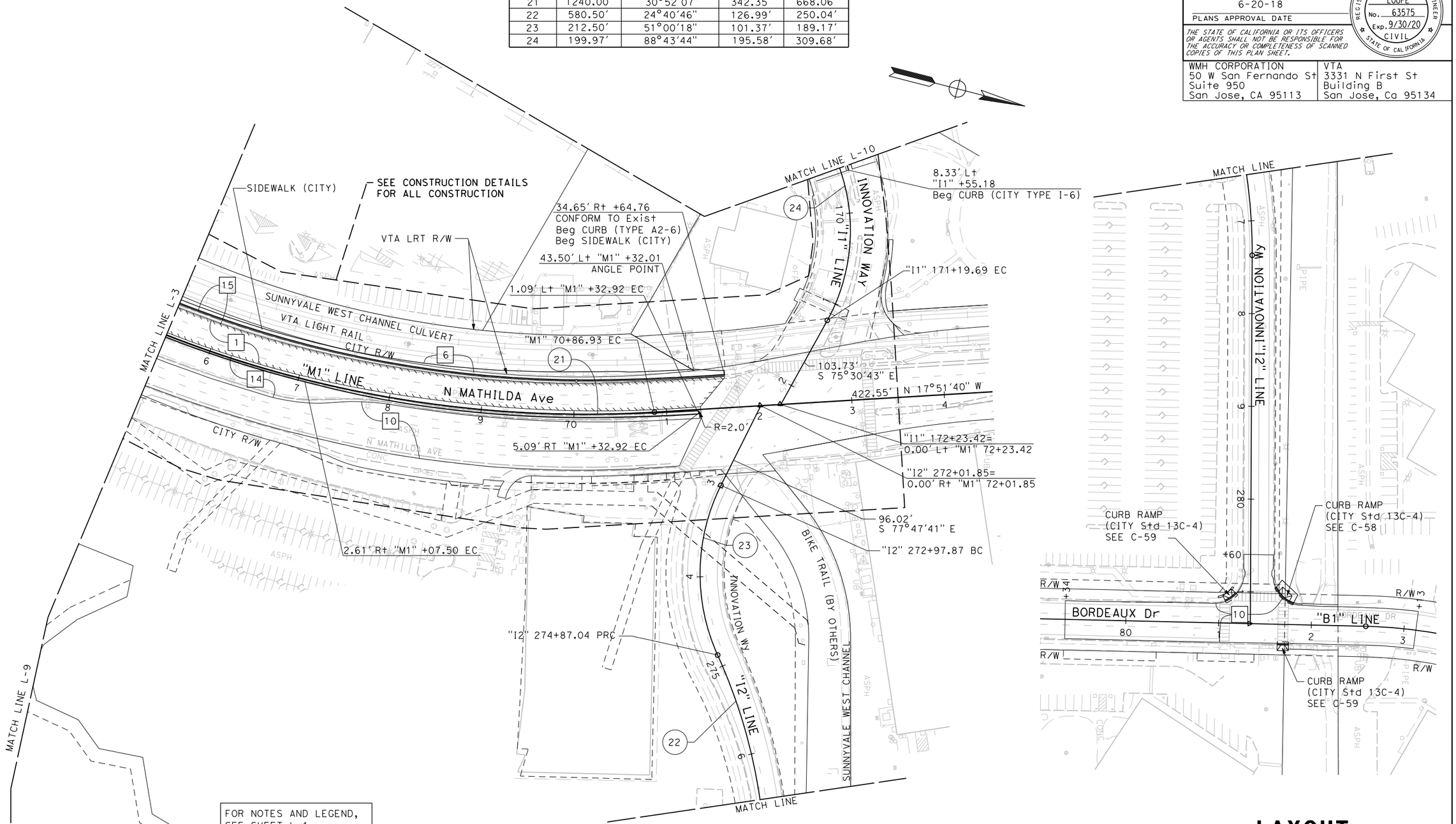

FOR NOTES AND LEGEND, SEE SHEET L-1

LAYOUT
SCALE: 1" = 50′

L-4

STATE OF CALIFORNIA - DEPARTMENT OF TRANSPORTATION
Caltrans
CONSULTANT FUNCTIONAL SUPERVISOR: TIMOTHY J. LEE
CALCULATED-DESIGNED BY: SHAWN VOGTMAN
CHECKED BY: STEVE LOUPE
REVISED BY: SCV
DATE REVISED: 05/03/18
EF: 09/21/18

X:\237_101_Mathilda\000_CAD\Sheets\000_Submittals\Conformed Plans\0413000204ea004.dgn

LAST REVISION 01-15-18
DATE PLOTTED => 12/3/2018
TIME PLOTTED => 12:20:45 PM

BORDER LAST REVISED 7/2/2010
USERNAME => eilif
DGN FILE => 0413000204ea004.dgn
RELATIVE BORDER SCALE IS IN INCHES 0 1 2 3
UNIT 0000
PROJECT NUMBER & PHASE 0413000204

NOTE:

FOR ACCURATE RIGHT OF WAY DATA, CONTACT RIGHT OF WAY ENGINEERING AT THE DISTRICT OFFICE.

Dist	COUNTY	ROUTE	POST MILES TOTAL PROJECT	SHEET No.	TOTAL SHEETS
04	SCL	101,237	45.2/45.8, 2.7/3.3	19	736

REGISTERED CIVIL ENGINEER 6-13-18 DATE

6-20-18

PLANS APPROVAL DATE

REGISTERED PROFESSIONAL ENGINEER STEVE LOUPE No. 63575 Exp. 9/30/18 CIVIL STATE OF CALIFORNIA

THE STATE OF CALIFORNIA OR ITS OFFICERS OR AGENTS SHALL NOT BE RESPONSIBLE FOR THE ACCURACY OR COMPLETENESS OF SCANNED COPIES OF THIS PLAN SHEET.

WMH CORPORATION
50 W San Fernando St
Suite 950
San Jose, CA 95113

VTA
3331 N First St
Building B
San Jose, Ca 95134

CURVE DATA

No. ⊞	R	Δ	T	L
26	350.00′	36°19′20"	114.81′	221.88′

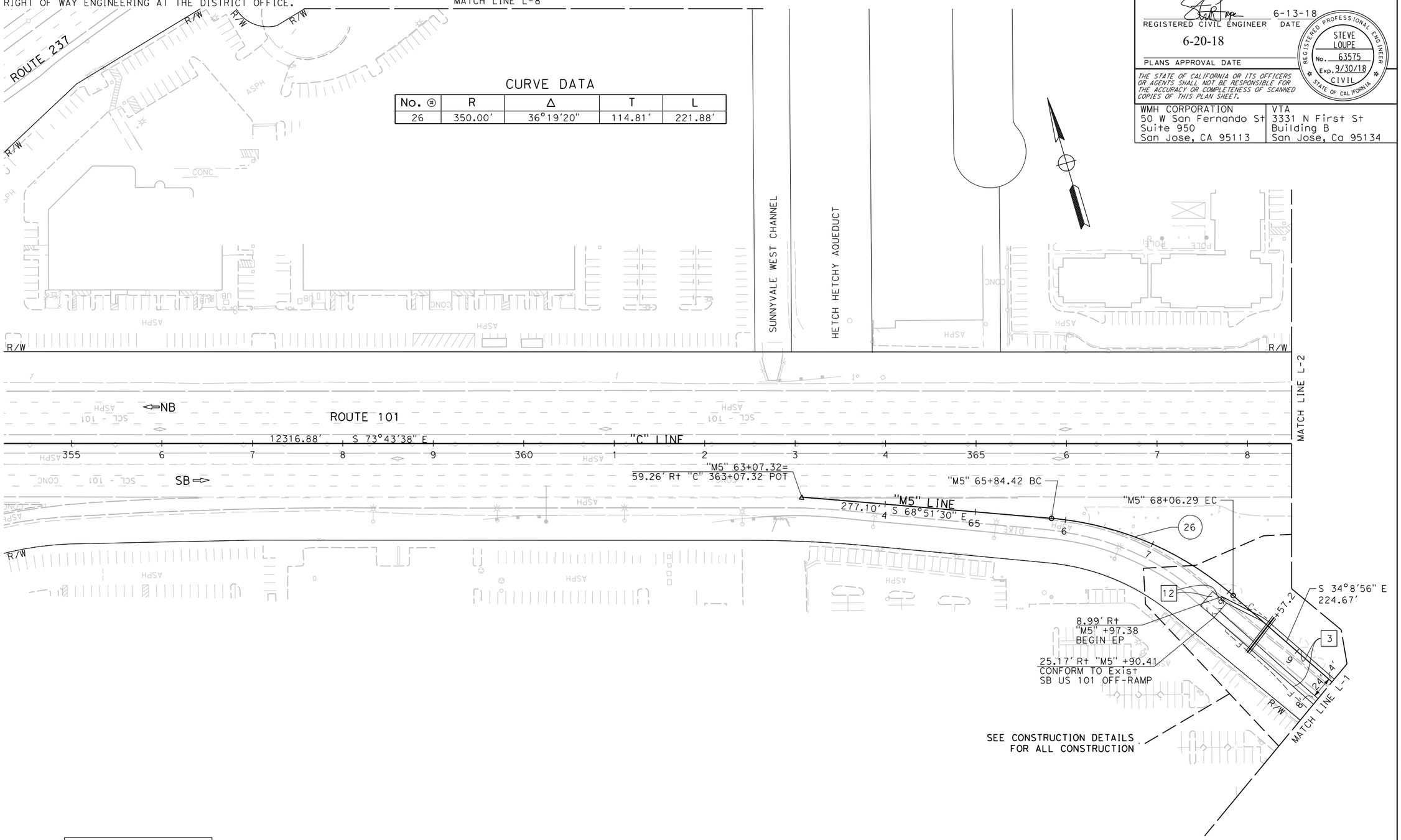

FOR NOTES AND LEGEND, SEE SHEET L-1

LAYOUT

SCALE: 1" = 50′

L-5

REVISED BY	SCV
DATE REVISED	05/03/18
SMD	09/21/18
CALCULATED-DESIGNED BY	SHAWN VOGTMAN
CHECKED BY	STEVE LOUPE
CONSULTANT FUNCTIONAL SUPERVISOR	TIMOTHY J. LEE

STATE OF CALIFORNIA - DEPARTMENT OF TRANSPORTATION

Caltrans

X:\237_101_Mathilda\000_CAD\Sheets\EA-Layouts\0413000204ea005.dgn

LAST REVISION 01-15-18 DATE PLOTTED => 9/21/2018 TIME PLOTTED => 2:33:11 PM

BORDER LAST REVISED 7/2/2010 | USERNAME => sdwyer DGN FILE => 0413000204ea005.dgn | RELATIVE BORDER SCALE IS IN INCHES 0 1 2 3 | UNIT 0000 | PROJECT NUMBER & PHASE 0413000204

NOTE:

FOR ACCURATE RIGHT OF WAY DATA, CONTACT RIGHT OF WAY ENGINEERING AT THE DISTRICT OFFICE.

Dist	COUNTY	ROUTE	POST MILES TOTAL PROJECT	SHEET No.	TOTAL SHEETS
04	SCL	101,237	45.2/45.8, 2.7/3.3	20	736

REGISTERED CIVIL ENGINEER 6-13-18 DATE

6-20-18

PLANS APPROVAL DATE

REGISTERED PROFESSIONAL ENGINEER STEVE LOUPE No. 63575 Exp. 9/30/18 CIVIL STATE OF CALIFORNIA

THE STATE OF CALIFORNIA OR ITS OFFICERS OR AGENTS SHALL NOT BE RESPONSIBLE FOR THE ACCURACY OR COMPLETENESS OF SCANNED COPIES OF THIS PLAN SHEET.

WMH CORPORATION
50 W San Fernando St
Suite 950
San Jose, CA 95113

VTA
3331 N First St
Building B
San Jose, Ca 95134

CURVE DATA

No. ⊕	R	Δ	T	L
27	381.50′	44°23′11"	155.63′	295.54′

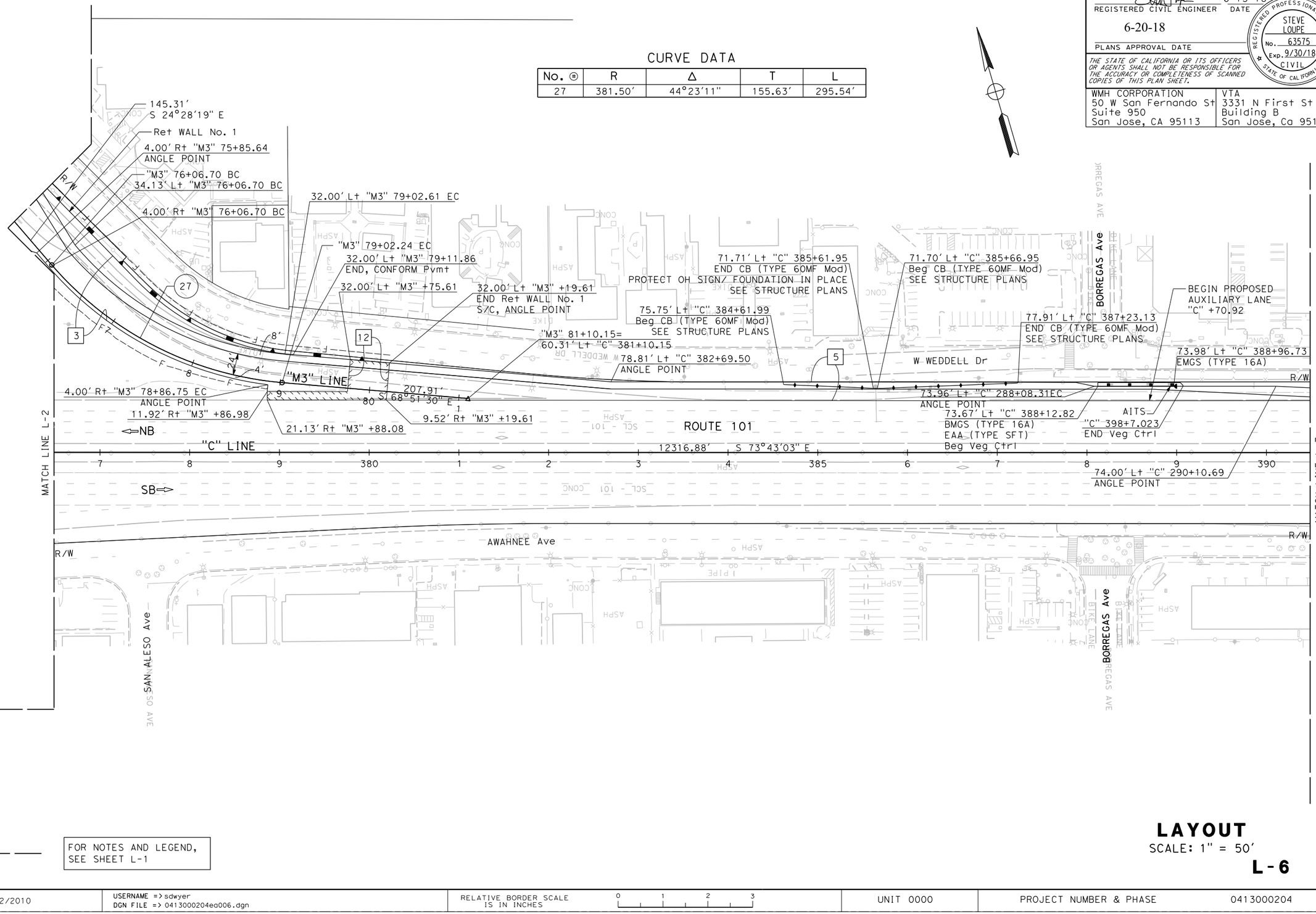

FOR NOTES AND LEGEND, SEE SHEET L-1

LAYOUT

SCALE: 1" = 50′

L-6

STATE OF CALIFORNIA - DEPARTMENT OF TRANSPORTATION

Caltrans

CONSULTANT FUNCTIONAL SUPERVISOR: TIMOTHY J. LEE

CALCULATED-DESIGNED BY: SHAWN VOGTMAN | CHECKED BY: STEVE LOUPE

REVISED BY: SCV | DATE REVISED: 05/03/18 | SMD: 09/21/18

X:\237_101_Mathilda\000_CAD\Sheets\EA-Layouts\0413000204ea006.dgn

LAST REVISION 01-15-18 | DATE PLOTTED => 9/21/2018 | TIME PLOTTED => 2:39:16 PM

BORDER LAST REVISED 7/2/2010 | USERNAME => sdwyer | DGN FILE => 0413000204ea006.dgn | RELATIVE BORDER SCALE IS IN INCHES 0 1 2 3 | UNIT 0000 | PROJECT NUMBER & PHASE 0413000204

Dist	COUNTY	ROUTE	POST MILES TOTAL PROJECT	SHEET No.	TOTAL SHEETS
04	SCL	101,237	45.2/45.8, 2.7/3.3	21	736

REGISTERED CIVIL ENGINEER 6-13-18 DATE

6-20-18
PLANS APPROVAL DATE

REGISTERED PROFESSIONAL ENGINEER STEVE LOUPE No. 63575 Exp. 9/30/18 CIVIL STATE OF CALIFORNIA

THE STATE OF CALIFORNIA OR ITS OFFICERS OR AGENTS SHALL NOT BE RESPONSIBLE FOR THE ACCURACY OR COMPLETENESS OF SCANNED COPIES OF THIS PLAN SHEET.

WMH CORPORATION
50 W San Fernando St
Suite 950
San Jose, CA 95113

VTA
3331 N First St
Building B
San Jose, Ca 95134

NOTE:

FOR ACCURATE RIGHT OF WAY DATA, CONTACT RIGHT OF WAY ENGINEERING AT THE DISTRICT OFFICE.

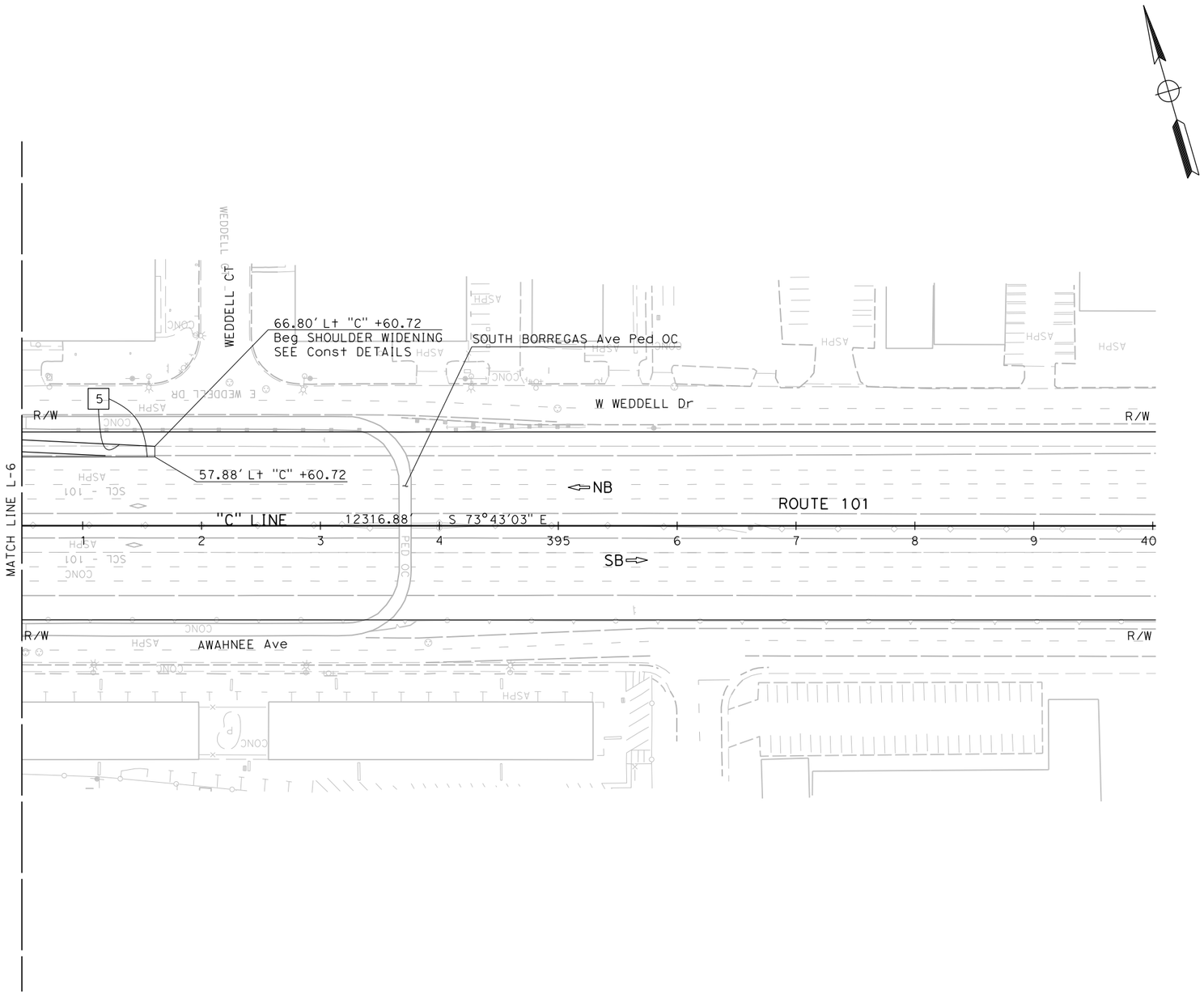

FOR NOTES AND LEGEND, SEE SHEET L-1

LAYOUT

SCALE: 1" = 50'

L-7

REVISED BY	SCV	CALCULATED-DESIGNED BY	SHAWN VOGTMAN	CONSULTANT FUNCTIONAL SUPERVISOR
DATE REVISED	05/03/18	CHECKED BY	STEVE LOUPE	TIMOTHY J. LEE

STATE OF CALIFORNIA - DEPARTMENT OF TRANSPORTATION

Caltrans

X:\237_101_Mathilda\000_CAD\Sheets\EA-Layouts\0413000204ea007.dgn

LAST REVISION 01-15-18 DATE PLOTTED => 6/20/2018 TIME PLOTTED => 11:00:53 AM

BORDER LAST REVISED 7/2/2010 | USERNAME => Eilif DGN FILE => 0413000204ea007.dgn | RELATIVE BORDER SCALE IS IN INCHES 0 1 2 3 | UNIT 0000 | PROJECT NUMBER & PHASE 0413000204

Dist	COUNTY	ROUTE	POST MILES TOTAL PROJECT	SHEET No.	TOTAL SHEETS
04	SCL	101,237	45.2/45.8, 2.7/3.3	22	736

REGISTERED CIVIL ENGINEER — DATE 6-13-18

PLANS APPROVAL DATE 6-20-18

STEVE LOUPE No. 63575 Exp. 9/30/20 CIVIL — REGISTERED PROFESSIONAL ENGINEER — STATE OF CALIFORNIA

THE STATE OF CALIFORNIA OR ITS OFFICERS OR AGENTS SHALL NOT BE RESPONSIBLE FOR THE ACCURACY OR COMPLETENESS OF SCANNED COPIES OF THIS PLAN SHEET.

WMH CORPORATION
50 W San Fernando St
Suite 950
San Jose, CA 95113

VTA
3331 N First St
Building B
San Jose, Ca 95134

NOTE:

FOR ACCURATE RIGHT OF WAY DATA, CONTACT RIGHT OF WAY ENGINEERING AT THE DISTRICT OFFICE.

CURVE DATA

No. ⓔ	R	Δ	T	L
28	2507.46′	15°44′04"	346.48′	688.59′
29	1000.00′	04°00′01"	34.92′	69.82′
30	3123.96′	02°27′51"	67.19′	134.35′
31	2437.00′	11°27′32"	244.51′	487.39′
32	20.00′	34°15′18"	6.16′	11.96′

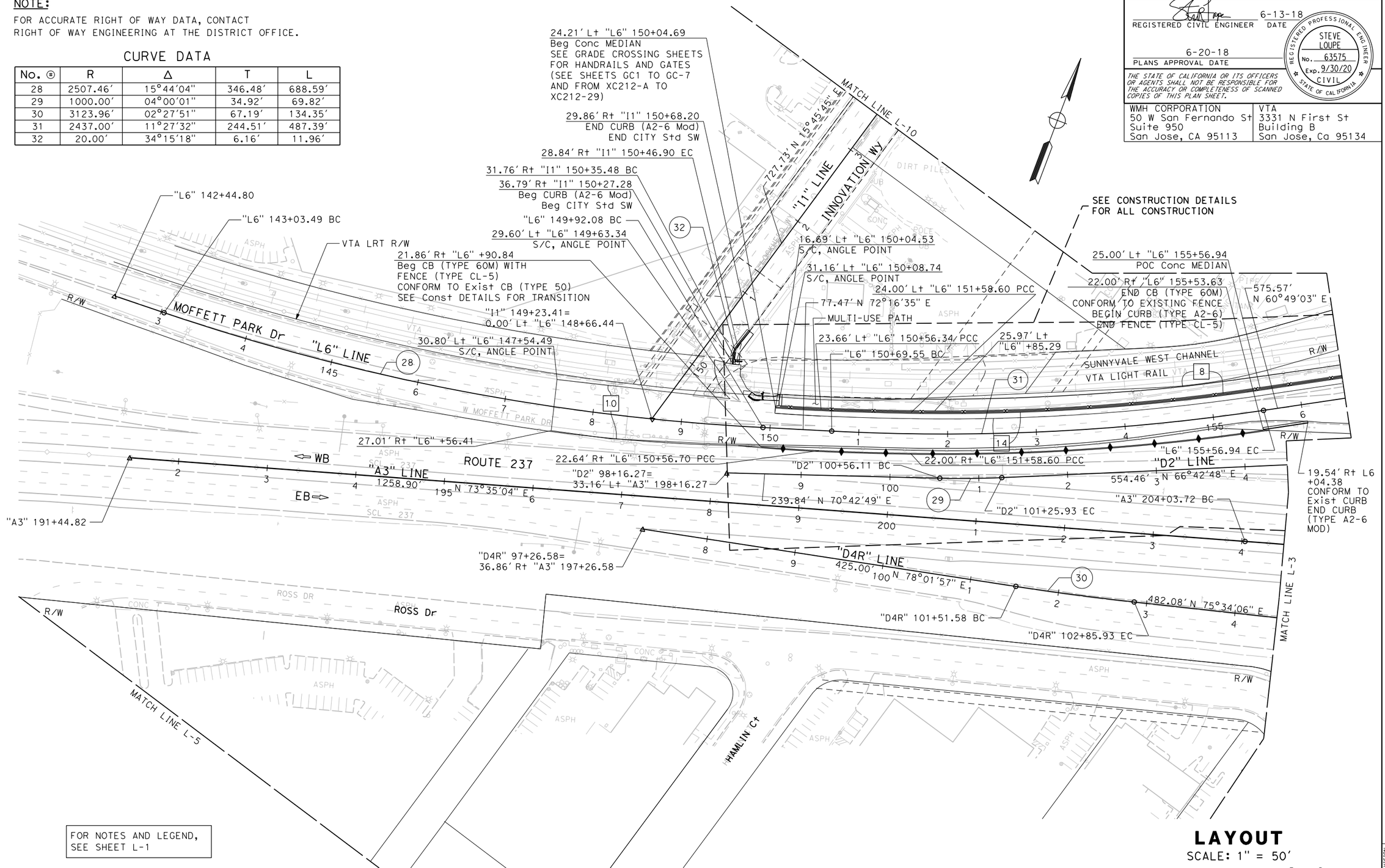

FOR NOTES AND LEGEND, SEE SHEET L-1

LAYOUT

SCALE: 1" = 50′

L-8

REVISED BY	DATE REVISED
SCV	05/03/18

SHAWN VOGTMAN — CALCULATED-DESIGNED BY
STEVE LOUPE — CHECKED BY
TIMOTHY J. LEE — CONSULTANT FUNCTIONAL SUPERVISOR

STATE OF CALIFORNIA - DEPARTMENT OF TRANSPORTATION — Caltrans

LAST REVISION 01-15-18 | DATE PLOTTED => 12/3/2018 | TIME PLOTTED => 12:20:47 PM

X:\237_101_Mathilda\000_CAD\Sheets\000_Submittals\Conformed Plans\0413000204ea008.dgn

BORDER LAST REVISED 7/2/2010 | USERNAME => eilif | DGN FILE => 0413000204ea008.dgn | RELATIVE BORDER SCALE IS IN INCHES 0 1 2 3 | UNIT 0000 | PROJECT NUMBER & PHASE 0413000204

NOTE:

FOR ACCURATE RIGHT OF WAY DATA, CONTACT
RIGHT OF WAY ENGINEERING AT THE DISTRICT OFFICE.

Dist	COUNTY	ROUTE	POST MILES TOTAL PROJECT	SHEET No.	TOTAL SHEETS
04	SCL	101,237	45.2/45.8, 2.7/3.3	23	736

REGISTERED CIVIL ENGINEER — DATE: 6-13-18

PLANS APPROVAL DATE: 6-20-18

REGISTERED PROFESSIONAL ENGINEER — STEVE LOUPE — No. 63575 — Exp. 9/30/18 — CIVIL — STATE OF CALIFORNIA

THE STATE OF CALIFORNIA OR ITS OFFICERS OR AGENTS SHALL NOT BE RESPONSIBLE FOR THE ACCURACY OR COMPLETENESS OF SCANNED COPIES OF THIS PLAN SHEET.

WMH CORPORATION 50 W San Fernando St Suite 950 San Jose, CA 95113	VTA 3331 N First St Building B San Jose, Ca 95134

CURVE DATA

No. ⓟ	R	Δ	T	L
20	1522.00′	20°07′32"	270.09′	534.61′
32	594.00′	17°49′04"	93.11′	184.72′
33	499.98′	10°45′55"	47.11′	93.94′
34	77.94′	102°06′03"	96.42′	138.89′
35	964.21′	7°54′47"	66.69′	133.17′
36	7000.00′	4°42′45"	288.03′	575.74′

MATCH LINE L-4
MAINTAIN DRIVEWAY ACCESS
"B1" 69+83.26 EC
"B1" 68+89.32 PCC
DECOMPOSED GRANITE
SEE Const DETAILS
23.02′ Lt "D3" 15+62.00
END CB (TYPE 60MC Mod)
Beg CB (TYPE 60MC)
23.02′ Lt "D3" 12+92.00
END CB (TYPE 60MC)
Beg CB (TYPE 60MC Mod)
29.03′ Lt "D3" +19.28
BC, METAL EDGING
34.56′ Lt "D3" +07.22
EC, METAL EDGING
Exist 7′ PUE
Exist 8′ PUE
CITY R/W
8′ SW
"B1" LINE
585.00′ N 15°44′53" E
6′ Exist SW
CITY R/W
CITY R/W STORAGE
MAINTAIN DRIVEWAY ACCESS
BORDEAUX DR
CURB RAMP
(CITY Std 13C-6)
SEE C-49
"B1" 67+50.42 BC
2.00′ Rt "D3" 18+22.14
S/C, ANGLE POINT
12′ MULTI-USE PATH
219.14′
S 82°52′55" W
"B1" 65+31.29 EC
15.00′ Lt "B1" 65+31.00 BC
28.00′ Lt "B1" 65+31.00 BC
CB (TYPE 60MC)
MAINTAIN DRIVEWAY ACCESS
"B1" 63+98.12 BC
SEE CONSTRUCTION DETAILS
FOR ALL CONSTRUCTION
69.96′ Lt "A3" 227+06.68
END FENCE (TYPE CL-6)
67.96′ Lt "A3" 227+06.68
END CB (TYPE 60MC)
END FENCE (TYPE CL-5)
BEGIN FENCE (TYPE CL-6)
BEGIN CRASH CUSHION SCI-100GM
15.00′ Lt "B1" 36+98.41 EC
28.00′ Lt "B1" 63+98.41 EC
CB (TYPE 60MC)
44.44′ Lt "A3" 221+48.16
S/C, ANGLE POINT
698.12′
S 74°58′08" W
15.03′ Rt "B1" 58+72.08
END 12′ CI 1 BIKE PATH
AT Exist CURB RAMP
CITY R/W
MOFFETT PARK Dr
R/W
AFTS
CB (TYPE 60MC)
MATCH LINE L-3
WB
448.04′ N 79°41′20" E
"A3" LINE
EB
"D3" 16+92.95 EC
16.00′ Rt "D3" 18+21.51
S/C, ANGLE POINT
34.80′ Lt "A3" +18.86
S/C, ANGLE POINT
"A3" 215+97.56 BC
ROUTE 237
"D3" LINE
447.32′ N 82°52′55" E
"D3" 21+40.28=
33.63′ Lt "A3" 221+40.28
56.04′ Lt "A3" 221+70.01
BMGS (TYPE 16B)
EAA (TYPE SFT)
+59.27′ Lt "A3" 222+37.25
EMGS (TYPE 16B)
1426.70′ N 74°58′35" E
"A3" 221+73.30 EC
"D5" LINE
1146.24′ N 75°23′41" E
PERSIAN Dr
"D5" 20+52.64=
38.79′ Rt "A3" 220+52.64
31.54′ Lt "A3" 221+48.05
S/C, ANGLE POINT
BRADFORD Dr
PLAZA Dr
BORREGAS Ave
R/W

FOR NOTES AND LEGEND,
SEE SHEET L-1

LAYOUT

SCALE: 1" = 50′

L-9

CALCULATED-DESIGNED BY	SHAWN VOGTMAN	REVISED BY	SMD
CHECKED BY	STEVE LOUPE	DATE REVISED	09/21/18
CONSULTANT FUNCTIONAL SUPERVISOR	TIMOTHY J. LEE		SCV 05/03/18
STATE OF CALIFORNIA - DEPARTMENT OF TRANSPORTATION	Caltrans		

LAST REVISION 01-15-18 — DATE PLOTTED => 9/21/2018 — TIME PLOTTED => 2:45:31 PM

X:\237_101_Mathilda\000_CAD\Sheets\EA-Layouts\0413000204ea009.dgn

BORDER LAST REVISED 7/2/2010 | USERNAME => sdwyer | DGN FILE => 0413000204ea009.dgn | RELATIVE BORDER SCALE IS IN INCHES 0 1 2 3 | UNIT 0000 | PROJECT NUMBER & PHASE 0413000204

Dist	COUNTY	ROUTE	POST MILES TOTAL PROJECT	SHEET No.	TOTAL SHEETS
04	SCL	101,237	45.2/45.8, 2.7/3.3	24	736

6-13-18
REGISTERED CIVIL ENGINEER — DATE

STEVE LOUPE No. 63575 Exp. 9/30/20 CIVIL — REGISTERED PROFESSIONAL ENGINEER — STATE OF CALIFORNIA

6-20-18
PLANS APPROVAL DATE

THE STATE OF CALIFORNIA OR ITS OFFICERS OR AGENTS SHALL NOT BE RESPONSIBLE FOR THE ACCURACY OR COMPLETENESS OF SCANNED COPIES OF THIS PLAN SHEET.

WMH CORPORATION
50 W San Fernando St
Suite 950
San Jose, CA 95113

VTA
3331 N First St
Building B
San Jose, Ca 95134

NOTE:

FOR ACCURATE RIGHT OF WAY DATA, CONTACT
RIGHT OF WAY ENGINEERING AT THE DISTRICT OFFICE.

CURVE DATA

No. ⊕	R	Δ	T	L
37	150.02′	89°58′11"	149.94′	235.57′
38	135.00′	89°58′29"	134.94′	212.00′
39	199.97′	88°43′44"	195.58′	309.68′
40	200.00′	28°17′54"	50.42′	98.78′
41	160.00′	19°53′39"	28.06′	55.56′

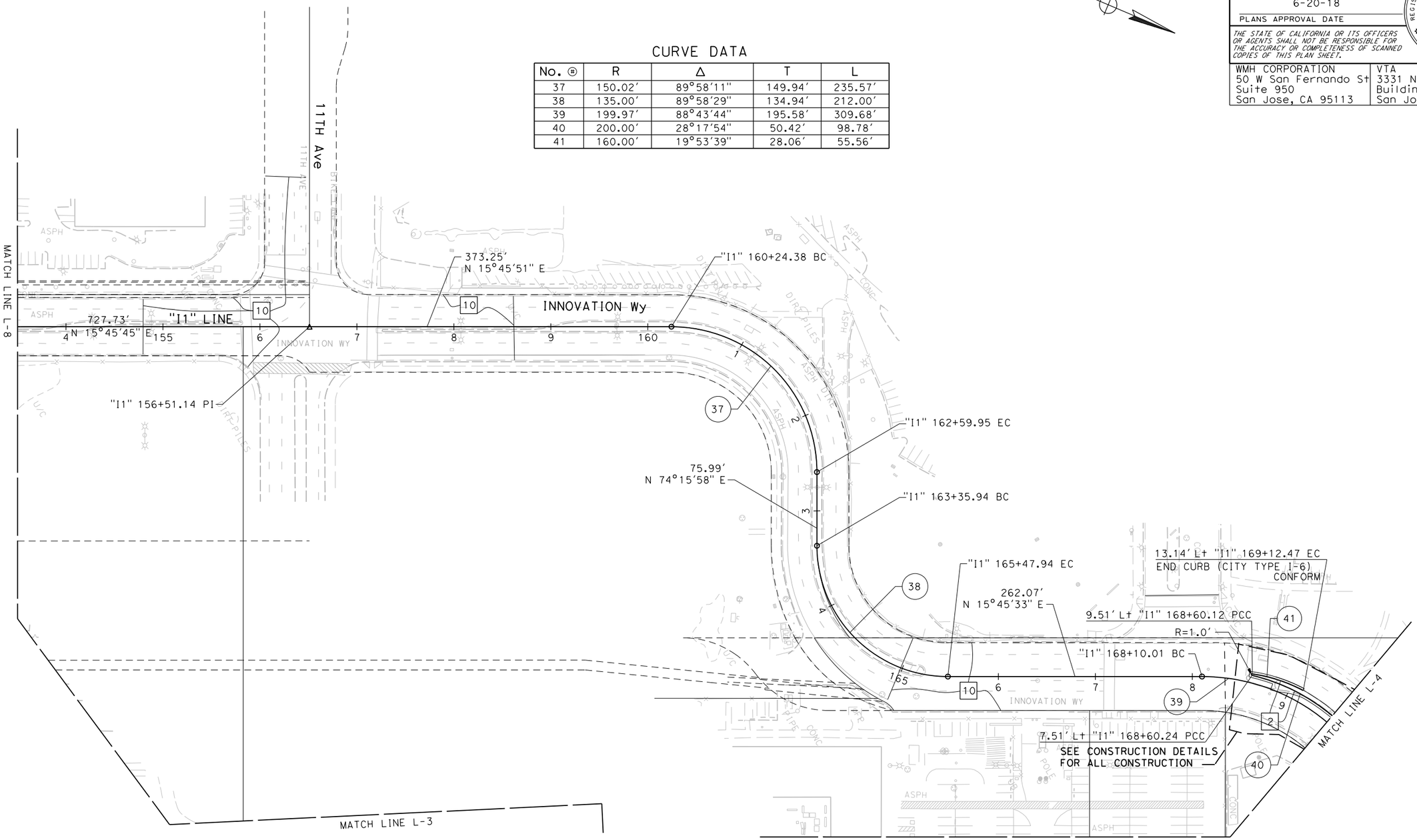

FOR NOTES AND LEGEND,
SEE SHEET L-1

LAYOUT

SCALE: 1" = 50′

L-10

	REVISED BY	DATE REVISED
	SCV	05/03/18

SHAWN VOGTMAN — CALCULATED-DESIGNED BY
STEVE LOUPE — CHECKED BY
TIMOTHY J. LEE — CONSULTANT FUNCTIONAL SUPERVISOR

STATE OF CALIFORNIA - DEPARTMENT OF TRANSPORTATION
Caltrans

X:\237_101_Mathilda\000_CAD\Sheets\000_Submittals\Conformed Plans\0413000204ea010.dgn

LAST REVISION 01-15-18 — DATE PLOTTED => 12/3/2018 TIME PLOTTED => 12:20:48 PM

BORDER LAST REVISED 7/2/2010 | USERNAME => eilif DGN FILE => 0413000204ea010.dgn | RELATIVE BORDER SCALE IS IN INCHES 0 1 2 3 | UNIT 0000 | PROJECT NUMBER & PHASE 0413000204

Dist	COUNTY	ROUTE	POST MILES TOTAL PROJECT	SHEET No.	TOTAL SHEETS
04	SCL	101,237	45.2/45.8, 2.7/3.3	25	736

6-13-18
REGISTERED CIVIL ENGINEER — DATE

6-20-18
PLANS APPROVAL DATE

REGISTERED PROFESSIONAL ENGINEER — STEVE LOUPE — No. 63575 — Exp. 9/30/18 — CIVIL — STATE OF CALIFORNIA

THE STATE OF CALIFORNIA OR ITS OFFICERS OR AGENTS SHALL NOT BE RESPONSIBLE FOR THE ACCURACY OR COMPLETENESS OF SCANNED COPIES OF THIS PLAN SHEET.

WMH CORPORATION
50 W San Fernando St
Suite 950
San Jose, CA 95113

VTA
3331 N First St
Building B
San Jose, Ca 95134

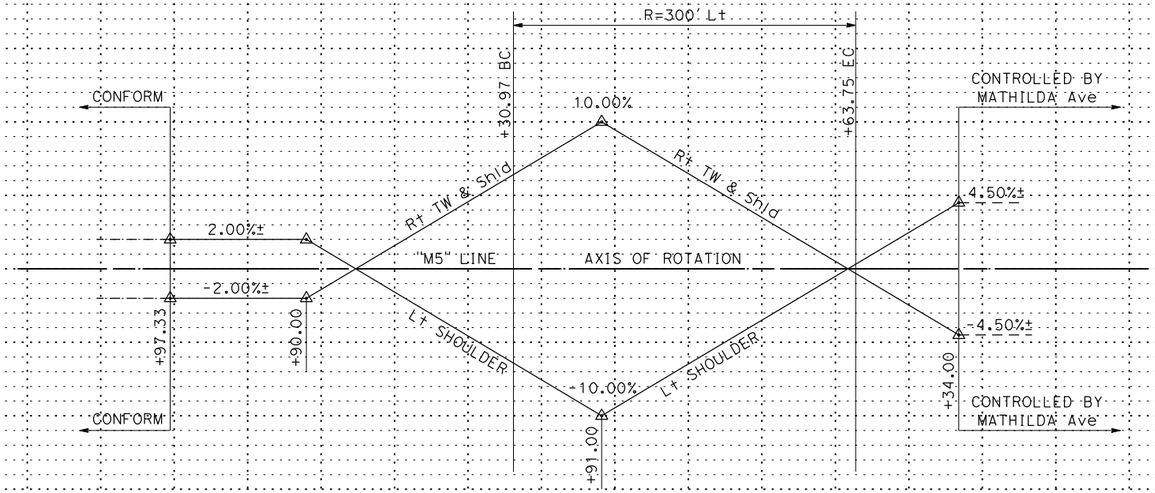

SUPERELEVATION DIAGRAM

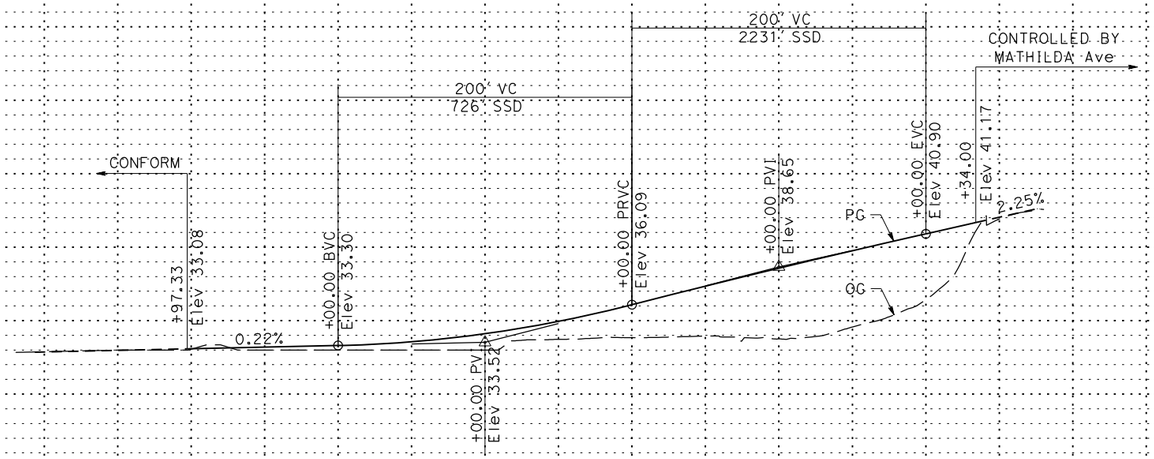

PROFILE

ROUTE 101 SB OFF-RAMP

"M5" LINE

PROFILE AND SUPERELEVATION DIAGRAM

SCALE: Horiz 1" = 50'
Vert 1" = 5'

PS-1

STATION: 65 6 7 8 9 70 1 2 3 4 75 6 7 — TOTAL

CY: Exc / Emb

STATE OF CALIFORNIA - DEPARTMENT OF TRANSPORTATION — Caltrans

CONSULTANT FUNCTIONAL SUPERVISOR: TIMOTHY J. LEE

CALCULATED-DESIGNED BY: SCOTT DWYER
CHECKED BY: STEVE LOUPE
REVISED BY: CR
DATE REVISED: 05/03/18

LAST REVISION: 01-15-18
DATE PLOTTED => 6/20/2018
TIME PLOTTED => 11:01:24 AM

X:\237_101_Mathilda\000_CAD\Sheets\FB-Profile_Super\04130000204fb001.dgn

BORDER LAST REVISED 7/2/2010 | USERNAME => Eilif | DGN FILE => 0413000204fb001.dgn | RELATIVE BORDER SCALE IS IN INCHES 0 1 2 3 | UNIT 0000 | PROJECT NUMBER & PHASE 0413000204

Dist	COUNTY	ROUTE	POST MILES TOTAL PROJECT	SHEET No.	TOTAL SHEETS
04	SCL	101,237	45.2/45.8, 2.7/3.3	26	736

REGISTERED CIVIL ENGINEER — 6-13-18 DATE

6-20-18
PLANS APPROVAL DATE

REGISTERED PROFESSIONAL ENGINEER — STEVE LOUPE — No. 63575 — Exp. 9/30/18 — CIVIL — STATE OF CALIFORNIA

THE STATE OF CALIFORNIA OR ITS OFFICERS OR AGENTS SHALL NOT BE RESPONSIBLE FOR THE ACCURACY OR COMPLETENESS OF SCANNED COPIES OF THIS PLAN SHEET.

WMH CORPORATION
50 W San Fernando St
Suite 950
San Jose, CA 95113

VTA
3331 N First St
Building B
San Jose, Ca 95134

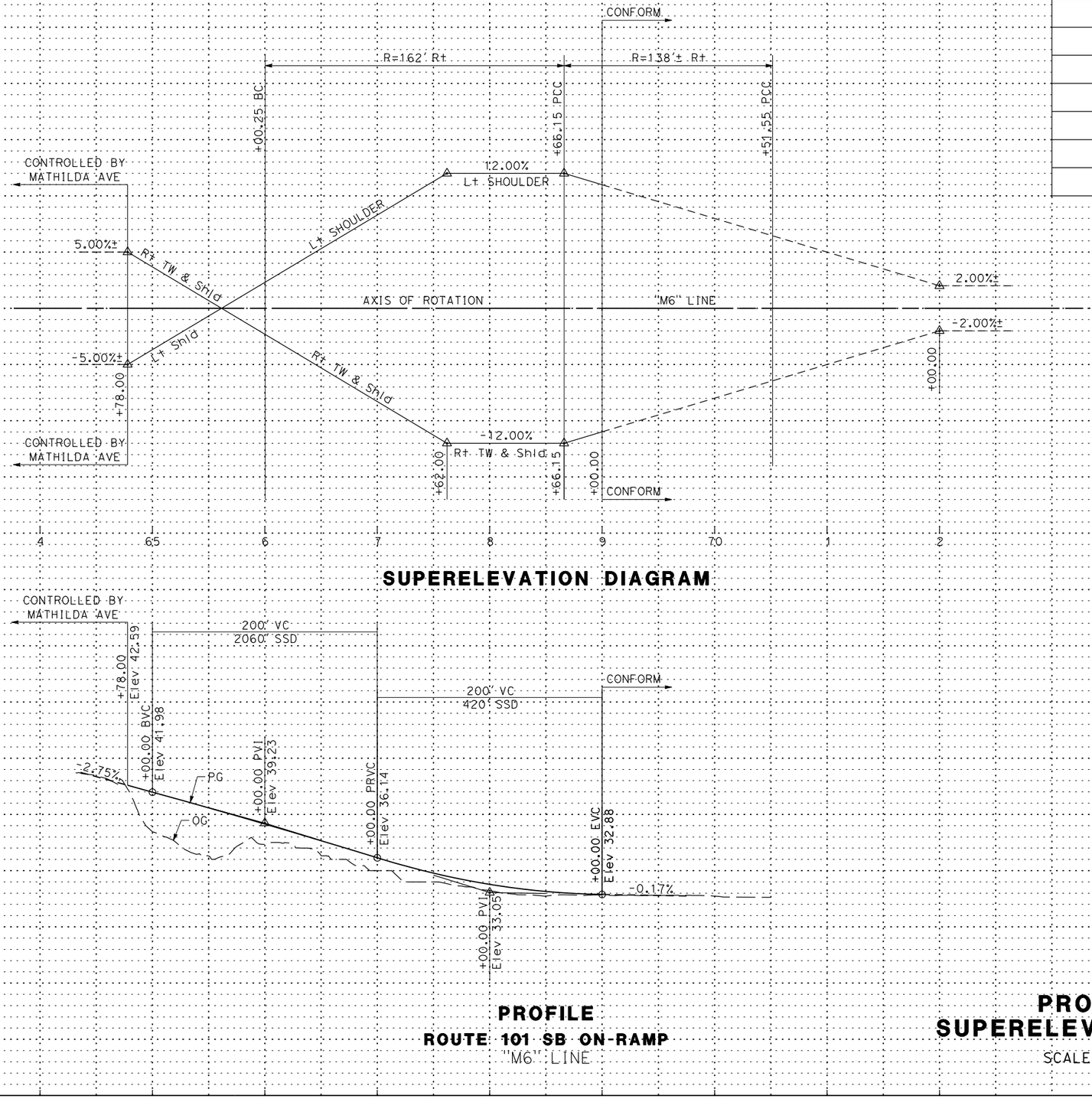

STATION	3	4	65	6	7	8	9	70	1	2	TOTAL
CY Exc											
CY Emb											

STATE OF CALIFORNIA - DEPARTMENT OF TRANSPORTATION	CONSULTANT FUNCTIONAL SUPERVISOR: TIMOTHY J. LEE	CALCULATED-DESIGNED BY: SCOTT DWYER
Caltrans		CHECKED BY: STEVE LOUPE
		REVISED BY: CR
		DATE REVISED: 05/03/18

LAST REVISION: 01-15-18
DATE PLOTTED => 6/20/2018
TIME PLOTTED => 11:01:25 AM

X:\237_101_Mathilda\000_CAD\Sheets\FB-Profile_Super\0413000204fb002.dgn

BORDER LAST REVISED 7/2/2010 | USERNAME => Eilif | DGN FILE => 0413000204fb002.dgn | RELATIVE BORDER SCALE IS IN INCHES 0 1 2 3 | UNIT 0000 | PROJECT NUMBER & PHASE 0413000204

Dist	COUNTY	ROUTE	POST MILES TOTAL PROJECT	SHEET No.	TOTAL SHEETS
04	SCL	101,237	45.2/45.8, 2.7/3.3	27	736

REGISTERED CIVIL ENGINEER — 6-13-18 DATE

6-20-18
PLANS APPROVAL DATE

REGISTERED PROFESSIONAL ENGINEER — STEVE LOUPE — No. 63575 — Exp. 9/30/18 — CIVIL — STATE OF CALIFORNIA

THE STATE OF CALIFORNIA OR ITS OFFICERS OR AGENTS SHALL NOT BE RESPONSIBLE FOR THE ACCURACY OR COMPLETENESS OF SCANNED COPIES OF THIS PLAN SHEET.

WMH CORPORATION
50 W San Fernando St
Suite 950
San Jose, CA 95113

VTA
3331 N First St
Building B
San Jose, Ca 95134

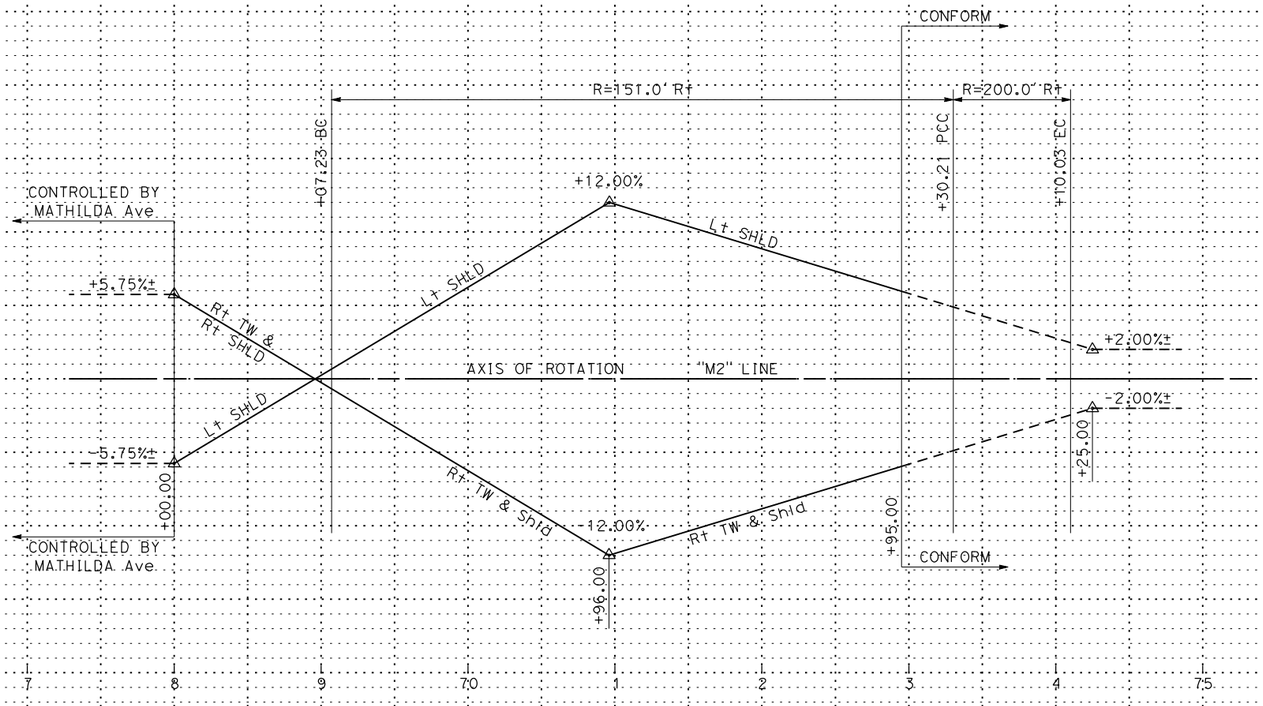

SUPERELEVATION DIAGRAM

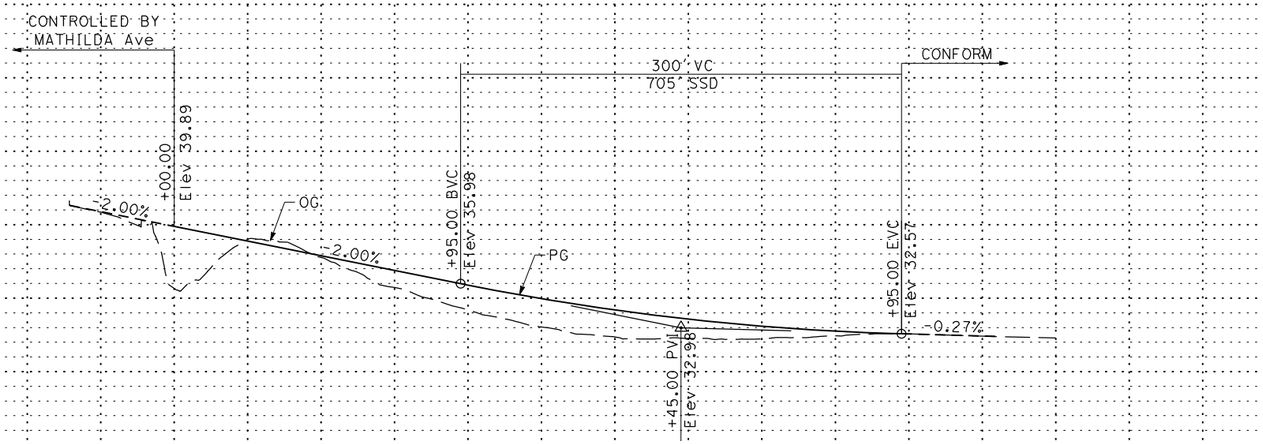

PROFILE

ROUTE 101 NB ON-RAMP
"M2" LINE

PROFILE AND SUPERELEVATION DIAGRAM

SCALE: Horiz 1" = 50'
Vert 1" = 5'

PS-3

STATION: 6 7 8 9 70 1 2 3 4 75 TOTAL

CY Exc
CY Emb

STATE OF CALIFORNIA - DEPARTMENT OF TRANSPORTATION — Caltrans

CONSULTANT FUNCTIONAL SUPERVISOR: TIMOTHY J. LEE

CALCULATED-DESIGNED BY: SCOTT DWYER
CHECKED BY: STEVE LOUPE
REVISED BY: CR
DATE REVISED: 05/03/18

LAST REVISION
DATE PLOTTED => 6/20/2018
TIME PLOTTED => 11:01:27 AM
01-15-18

X:\237_101_Mathilda\000_CAD\Sheets\FB-Profile_Super\0413000204fb003.dgn

BORDER LAST REVISED 7/2/2010 | USERNAME => Eilif | DGN FILE => 0413000204fb003.dgn | RELATIVE BORDER SCALE IS IN INCHES 0 1 2 3 | UNIT 0000 | PROJECT NUMBER & PHASE 0413000204

Dist	COUNTY	ROUTE	POST MILES TOTAL PROJECT	SHEET No.	TOTAL SHEETS
04	SCL	101,237	45.2/45.8, 2.7/3.3	28	736

REGISTERED CIVIL ENGINEER 6-13-18 DATE

6-20-18
PLANS APPROVAL DATE

REGISTERED PROFESSIONAL ENGINEER STEVE LOUPE No. 63575 Exp. 9/30/18 CIVIL STATE OF CALIFORNIA

THE STATE OF CALIFORNIA OR ITS OFFICERS OR AGENTS SHALL NOT BE RESPONSIBLE FOR THE ACCURACY OR COMPLETENESS OF SCANNED COPIES OF THIS PLAN SHEET.

WMH CORPORATION
50 W San Fernando St
Suite 950
San Jose, CA 95113

VTA
3331 N First St
Building B
San Jose, Ca 95134

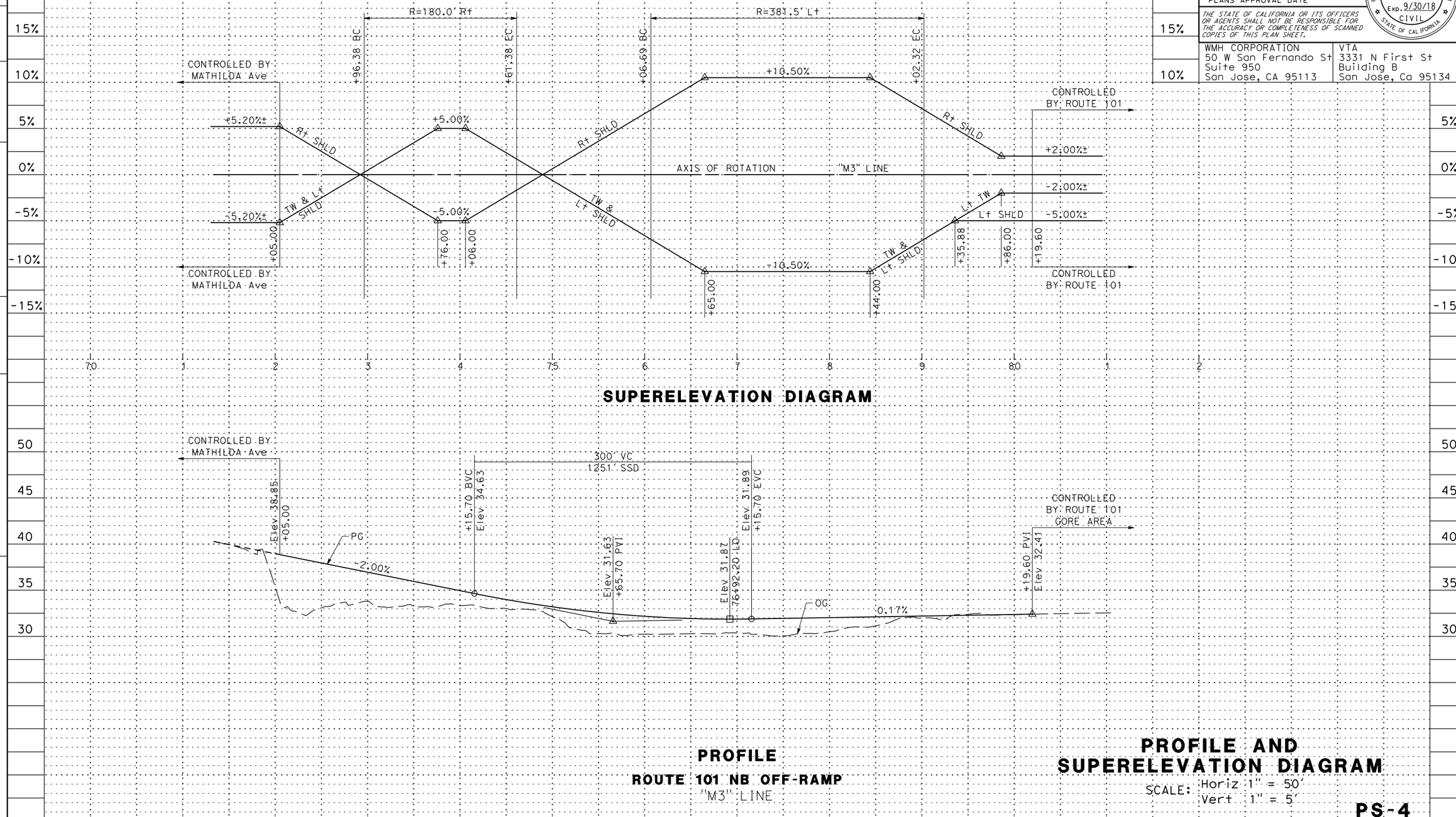

PROFILE

ROUTE 101 NB OFF-RAMP

"M3" LINE

PROFILE AND SUPERELEVATION DIAGRAM

SCALE: Horiz 1" = 50'
Vert 1" = 5'

PS-4

STATION	70	1	2	3	4	75	6	7	8	9	80	1	2	TOTAL
CY Exc														
CY Emb														

STATE OF CALIFORNIA - DEPARTMENT OF TRANSPORTATION
Caltrans

CONSULTANT FUNCTIONAL SUPERVISOR: TIMOTHY J. LEE
CALCULATED-DESIGNED BY: SCOTT DWYER
CHECKED BY: STEVE LOUPE
REVISED BY: CR
DATE REVISED: 05/03/18

X:\237_101_Mathilda\000_CAD\Sheets\FB-Profile_Super\0413000204fb004.dgn

LAST REVISION 01-15-18
DATE PLOTTED => 6/20/2018
TIME PLOTTED => 11:01:29 AM

Dist	COUNTY	ROUTE	POST MILES TOTAL PROJECT	SHEET No.	TOTAL SHEETS
04	SCL	101,237	45.2/45.8, 2.7/3.3	29	736

REGISTERED CIVIL ENGINEER — 6-13-18 DATE

STEVE LOUPE No. 63575 Exp. 9/30/18 CIVIL — REGISTERED PROFESSIONAL ENGINEER — STATE OF CALIFORNIA

6-20-18
PLANS APPROVAL DATE

THE STATE OF CALIFORNIA OR ITS OFFICERS OR AGENTS SHALL NOT BE RESPONSIBLE FOR THE ACCURACY OR COMPLETENESS OF SCANNED COPIES OF THIS PLAN SHEET.

WMH CORPORATION
50 W San Fernando St
Suite 950
San Jose, CA 95113

VTA
3331 N First St
Building B
San Jose, Ca 95134

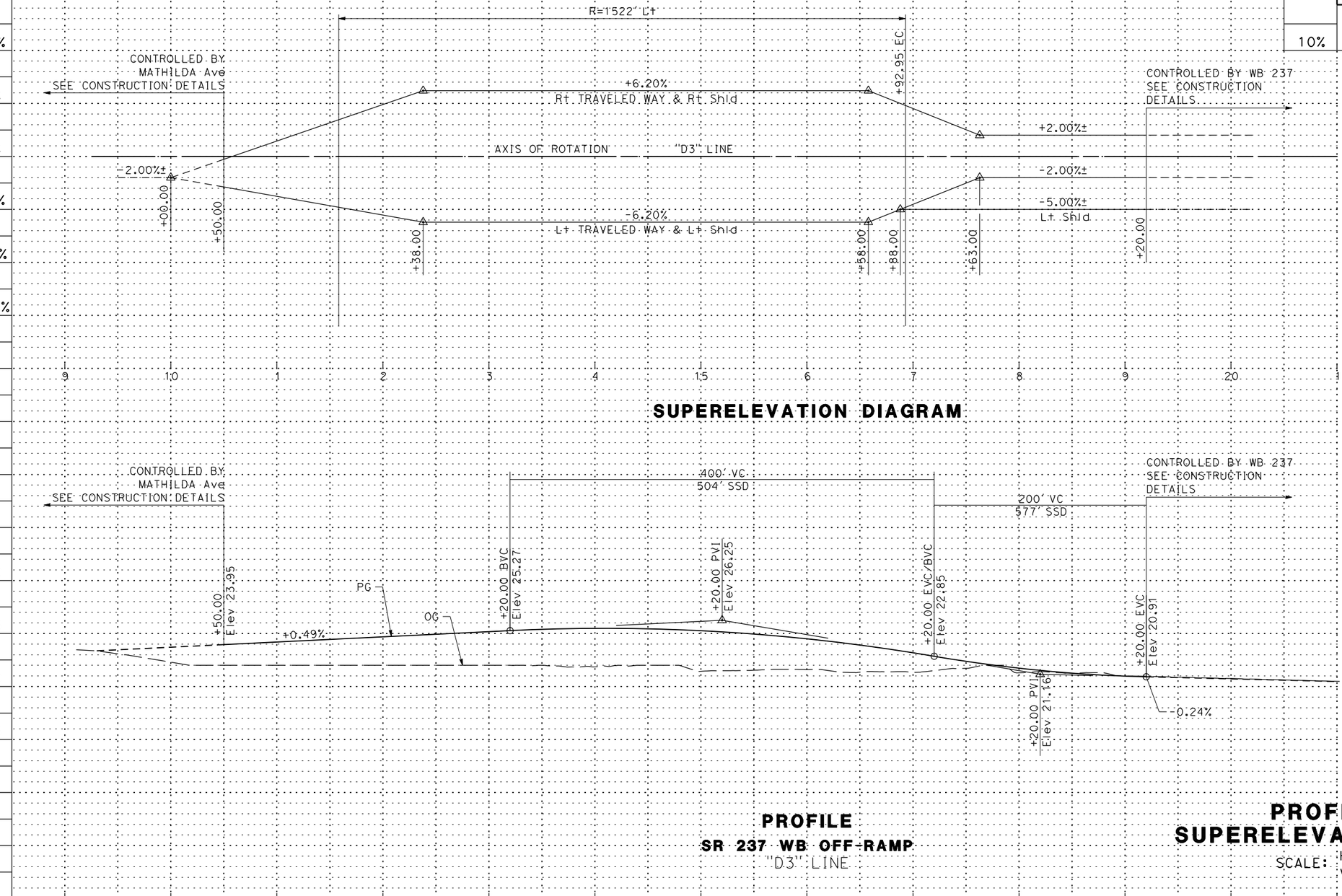

SUPERELEVATION DIAGRAM

PROFILE

SR 237 WB OFF-RAMP

"D3" LINE

PROFILE AND SUPERELEVATION DIAGRAM

SCALE: Horiz 1" = 50'
Vert 1" = 5'

PS-5

STATION	9	10	1	2	3	4	15	6	7	8	9	20	1	2	TOTAL
CY Exc															
CY Emb															

REVISED BY	CR
DATE REVISED	05/03/18
NOOR ALZIREENI	STEVE LOUPE
CALCULATED-DESIGNED BY	
CHECKED BY	
CONSULTANT FUNCTIONAL SUPERVISOR	TIMOTHY J. LEE

STATE OF CALIFORNIA - DEPARTMENT OF TRANSPORTATION
Caltrans

LAST REVISION 01-15-18
DATE PLOTTED => 6/20/2018
TIME PLOTTED => 11:01:31 AM

X:\237_101_Mathilda\000_CAD\Sheets\FB-Profile_Super\0413000204fb005.dgn

BORDER LAST REVISED 7/2/2010 | USERNAME => Eilif | DGN FILE => 0413000204fb005.dgn | RELATIVE BORDER SCALE IS IN INCHES 0 1 2 3 | UNIT 0000 | PROJECT NUMBER & PHASE 0413000204

Dist	COUNTY	ROUTE	POST MILES TOTAL PROJECT	SHEET No.	TOTAL SHEETS
04	SCL	101,237	45.2/45.8, 2.7/3.3	30	736

REGISTERED CIVIL ENGINEER 6-13-18 DATE

6-20-18
PLANS APPROVAL DATE

REGISTERED PROFESSIONAL ENGINEER STEVE LOUPE No. 63575 Exp. 9/30/18 CIVIL STATE OF CALIFORNIA

THE STATE OF CALIFORNIA OR ITS OFFICERS OR AGENTS SHALL NOT BE RESPONSIBLE FOR THE ACCURACY OR COMPLETENESS OF SCANNED COPIES OF THIS PLAN SHEET.

WMH CORPORATION
50 W San Fernando St
Suite 950
San Jose, CA 95113

VTA
3331 N First St
Building B
San Jose, Ca 95134

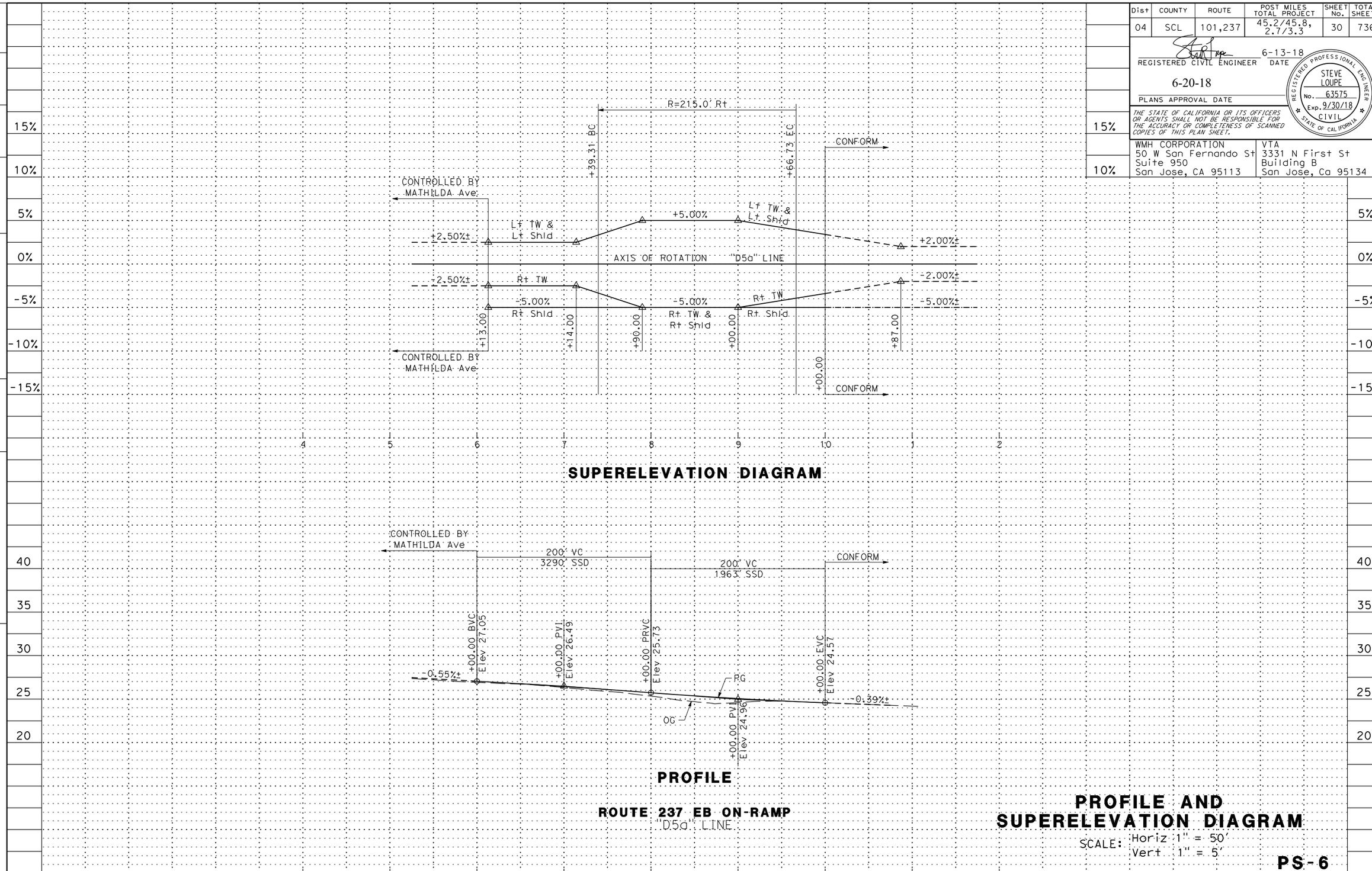

PROFILE AND SUPERELEVATION DIAGRAM

SCALE: Horiz 1" = 50'
Vert 1" = 5'

PS-6

STATION	4	5	6	7	8	9	10	1	2	TOTAL
CY Exc										
CY Emb										

STATE OF CALIFORNIA - DEPARTMENT OF TRANSPORTATION
Caltrans

CONSULTANT FUNCTIONAL SUPERVISOR: TIMOTHY J. LEE
CALCULATED-DESIGNED BY: SCOTT DWYER
CHECKED BY: STEVE LOUPE
REVISED BY: CR
DATE REVISED: 05/03/18

X:\237_101_Mathilda\000_CAD\Sheets\FB-Profile_Super\0413000204fb006.dgn

LAST REVISION 01-15-18
DATE PLOTTED => 6/20/2018
TIME PLOTTED => 11:01:33 AM

Dist	COUNTY	ROUTE	POST MILES TOTAL PROJECT	SHEET No.	TOTAL SHEETS
04	SCL	101,237	45.2/45.8, 2.7/3.3	31	736

REGISTERED CIVIL ENGINEER — 6-13-18 DATE

6-20-18
PLANS APPROVAL DATE

REGISTERED PROFESSIONAL ENGINEER — STEVE LOUPE — No. 63575 — Exp. 9/30/18 — CIVIL — STATE OF CALIFORNIA

THE STATE OF CALIFORNIA OR ITS OFFICERS OR AGENTS SHALL NOT BE RESPONSIBLE FOR THE ACCURACY OR COMPLETENESS OF SCANNED COPIES OF THIS PLAN SHEET.

WMH CORPORATION 50 W San Fernando St Suite 950 San Jose, CA 95113	VTA 3331 N First St Building B San Jose, Ca 95134

NOTES:

1. FOR ACCURATE RIGHT OF WAY DATA, CONTACT RIGHT OF WAY ENGINEERING AT THE DISTRICT OFFICE.
2. NO CITY OF SUNNYVALE MONUMENT MAY BE REMOVED OR DESTROYED WITHOUT OBTAINING WRITTEN AUTHORIZATION FROM THE CITY SURVEYOR NO SOONER THAN 3 WEEKS NO LESS THAN ONE WEEK PRIOR TO SUCH REMOVAL. UPON REMOVAL OF ANY MONUMENT ALL FRAME AND CASTINGS AND THE MONUMENT DISK (IF ANY) SHALL BE SALVAGED AND RETURNED TO THE CITY SURVEYOR OF THE OWNING AGENCY AS DIRECTED.
3. FOR ADDITIONAL SAWCUT LIMITS, BASE AND SURFACING REMOVAL, SEE TYPICAL SECTIONS.

LEGEND:

- REMOVE CONCRETE Pvmt
- REMOVE CONCRETE
- REMOVE BASE AND SURFACING
- (X) REMOVAL ITEM CODE
- ESMT

ABBREVIATIONS:

C&G	CURB AND GUTTER
SW	SIDEWALK
TCE	TEMPORARY CONSTRUCTION EASEMENT

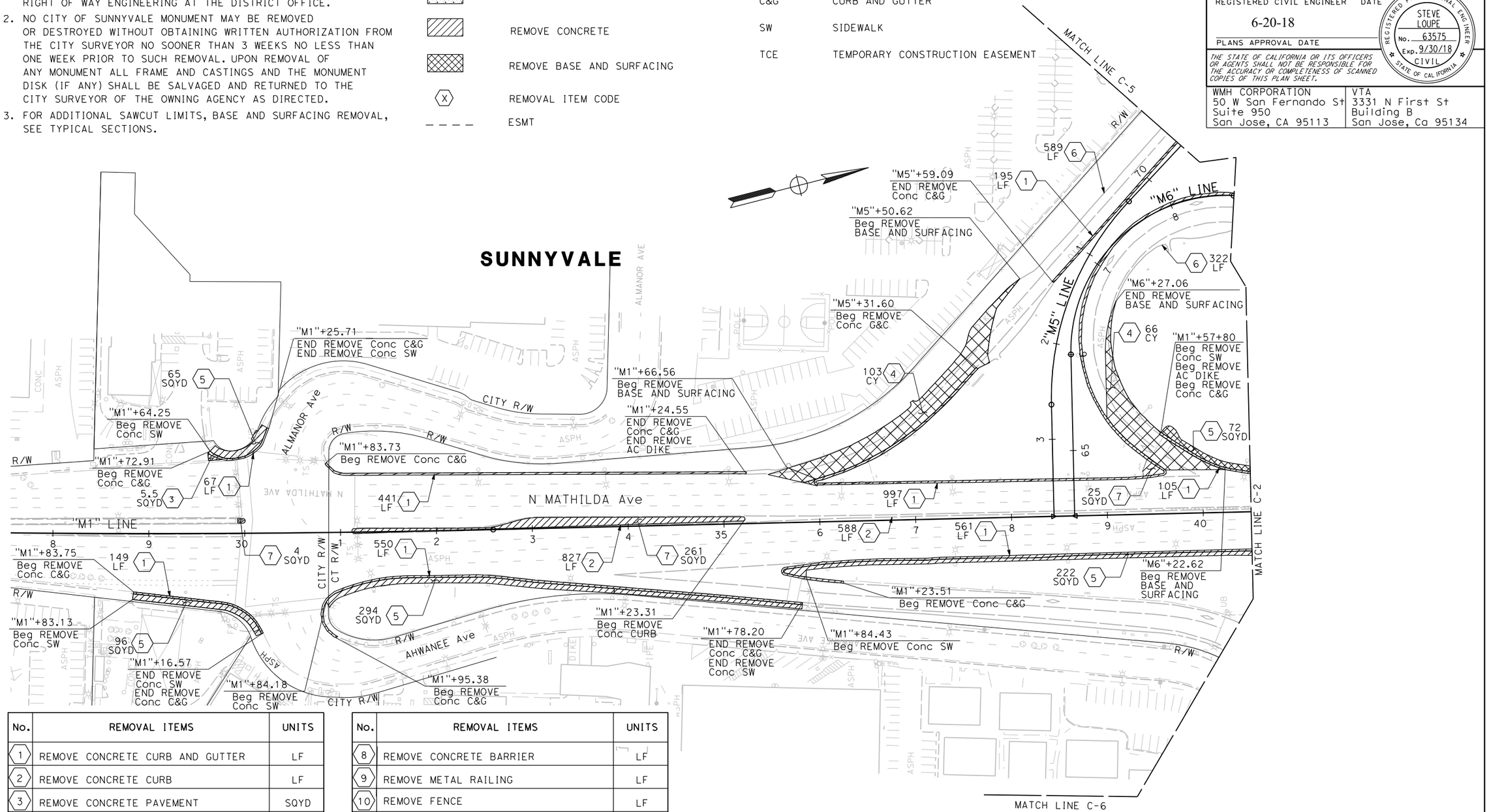

No.	REMOVAL ITEMS	UNITS
1	REMOVE CONCRETE CURB AND GUTTER	LF
2	REMOVE CONCRETE CURB	LF
3	REMOVE CONCRETE PAVEMENT	SQYD
4	REMOVE BASE AND SURFACING	CY
5	REMOVE CONCRETE SIDEWALK	SQYD
6	REMOVE AC DIKE	LF
7	REMOVE CONCRETE (MISCELLANEOUS)	SQYD

No.	REMOVAL ITEMS	UNITS
8	REMOVE CONCRETE BARRIER	LF
9	REMOVE METAL RAILING	LF
10	REMOVE FENCE	LF
11	REMOVE CHAIN LINK FENCE	LF
12	REMOVE SOUND WALL	LF
13	REMOVE GUARDRAIL	LF

CONSTRUCTION DETAILS
(REMOVAL PLAN)
SCALE: 1" = 50'

C-1

REVISED BY	DATE REVISED
SCV	01/15/18

CALCULATED-DESIGNED BY: EILI FARAH
CHECKED BY: STEVE LOUPE
CONSULTANT FUNCTIONAL SUPERVISOR: TIMOTHY J. LEE
STATE OF CALIFORNIA - DEPARTMENT OF TRANSPORTATION
Caltrans

LAST REVISION 01-15-18
DATE PLOTTED => 6/20/2018
TIME PLOTTED => 11:02:03 AM

X:\237_101_Mathilda\000_CAD\Sheets\GA-Const_Details\0413000204ga001.dgn

BORDER LAST REVISED 7/2/2010 | USERNAME => Eilif | DGN FILE => 0413000204ga001.dgn | RELATIVE BORDER SCALE IS IN INCHES 0 1 2 3 | UNIT 0000 | PROJECT NUMBER & PHASE 0413000204

NOTE:

FOR ACCURATE RIGHT OF WAY DATA, CONTACT
RIGHT OF WAY ENGINEERING AT THE DISTRICT OFFICE.

Dist	COUNTY	ROUTE	POST MILES TOTAL PROJECT	SHEET No.	TOTAL SHEETS
04	SCL	101,237	45.2/45.8, 2.7/3.3	32	736

REGISTERED CIVIL ENGINEER — 6-13-18 DATE

STEVE LOUPE No. 63575 Exp. 9/30/18 CIVIL — REGISTERED PROFESSIONAL ENGINEER — STATE OF CALIFORNIA

6-20-18
PLANS APPROVAL DATE

THE STATE OF CALIFORNIA OR ITS OFFICERS OR AGENTS SHALL NOT BE RESPONSIBLE FOR THE ACCURACY OR COMPLETENESS OF SCANNED COPIES OF THIS PLAN SHEET.

WMH CORPORATION
50 W San Fernando St
Suite 950
San Jose, CA 95113

VTA
3331 N First St
Building B
San Jose, Ca 95134

MATCH LINE C-5

MATHILDA Ave OC
Br No. 37-0177

HETCH HETCHY AQUEDUCT

N MATHILDA Ave

W WEDDELL Dr

"C" LINE

"M1" LINE

"M2" LINE

"M3" LINE

ROUTE 101

MATCH LINE C-1

MATCH LINE C-3

MATCH LINE C-6

SB

NB

R/W

SFPUC R/W

15 LF (1) "M6"+82.10 End REMOVE Conc C&G; "M6"+82.10 END REMOVE AC DIKE

12 LF (6)

"M1" +09.09 END REMOVE Conc SW; End REMOVE Conc C&G

"M1" +92.56 Beg REMOVE FENCE; Beg REMOVE METAL RALING

172 LF (13)

278 LF (8)

"M1"+93.81 Beg REMOVE Conc Barrier

59 LF (1)

38 LF (1)

278 LF (10)

"M1"+87.82 END REMOVE Conc C&G; Beg REMOVE FENCE; Beg Remove METAL RAILING; Beg REMOVE Conc Barrier

"M1"+63.06 END REMOVE FENCE; END REMOVE METAIL RAILING; END REMOVE Conc Barrier

543 LF (1)

258 CY (4)

483 LF (6)

281 LF (1)

171 LF (13)

278 LF (10)

"M1"+31.16 END REMOVE Conc SW; END REMOVE Conc C&G

"M1"+68.62 END REMOVE FENCE; END REMOVE METAL RAILING; END REMOVE Conc Barrier; Beg REMOVE Conc C&G

354 SQYD (5)

90 LF (1)

278 LF (8)

147 LF (1)

"M1"+48.71 Beg REMOVE Conc C&G; "M1"+51.08 END REMOVE AC DIKE

341 SQYD (5)

"M1"+3.57 END REMOVE Conc C&G

"M1"+9.36 END REMOVE Conc SW; Beg REMOVE AC DIKE; Beg REMOVE BASE AND SURFACING

33 CY (4)

"M2"+10.96 END REMOVE BASE AND SURFACING

450 LF (6)

42 LF (13)

42 LF (6)

"M1"+10.42 Beg REMOVE Conc C&G

549 LF (1)

847 LF (1)

575 SQYD (7)

209 SQYD (5)

"M2"+90.82 Beg REMOVE Conc SW

"M3"+71.43 Beg REMOVE SOUND WALL

"M3"+73.01 END REMOVE BASE AND SURFACING

478 LF (6)

195 LF (12)

"M3" +00 END REMOVE Conc C&G; Beg REMOVE AC DIKE

174 LF (1)

1306 LF (2)

182 SQYD (5)

93 SQYD (3)

"M1"+68.43 Beg REMOVE Conc SW

"M1"+25.80 Beg REMOVE Conc Pvmt

48 LF (6)

91 CY (4)

"M1"+53.66 Beg REMOVE Conc C&G; Beg REMOVE Conc SW; Beg REMOVE AC DIKE

"M1"+50.80 END REMOVE Conc C&G

FOR NOTES AND ABBREVIATIONS AND LEGEND, SEE SHEET C-1

CONSTRUCTION DETAILS
(REMOVAL PLAN)
SCALE: 1" = 50'

C-2

REVISED BY	DATE REVISED
SCV	01/15/18
DAG	09/20/18

CALCULATED-DESIGNED BY: EILI FARAH
CHECKED BY: STEVE LOUPE
CONSULTANT FUNCTIONAL SUPERVISOR: TIMOTHY J. LEE
STATE OF CALIFORNIA - DEPARTMENT OF TRANSPORTATION
Caltrans

LAST REVISION 01-15-18 | DATE PLOTTED => 9/20/2018 | TIME PLOTTED => 1:46:47 PM

X:\237_101_Mathilda\000_CAD\Sheets\VGA-Const_Details\0413000204ga002.dgn

BORDER LAST REVISED 7/2/2010 | USERNAME => Dianneg | DGN FILE => 0413000204ga002.dgn | RELATIVE BORDER SCALE IS IN INCHES 0 1 2 3 | UNIT 0000 | PROJECT NUMBER & PHASE 0413000204

NOTE:
FOR ACCURATE RIGHT OF WAY DATA, CONTACT RIGHT OF WAY ENGINEERING AT THE DISTRICT OFFICE.

Dist	COUNTY	ROUTE	POST MILES TOTAL PROJECT	SHEET No.	TOTAL SHEETS
04	SCL	101,237	45.2/45.8, 2.7/3.3	33	736

REGISTERED CIVIL ENGINEER 6-13-18 DATE

6-20-18
PLANS APPROVAL DATE

REGISTERED PROFESSIONAL ENGINEER STEVE LOUPE No. 63575 Exp. 9/30/18 CIVIL STATE OF CALIFORNIA

THE STATE OF CALIFORNIA OR ITS OFFICERS OR AGENTS SHALL NOT BE RESPONSIBLE FOR THE ACCURACY OR COMPLETENESS OF SCANNED COPIES OF THIS PLAN SHEET.

WMH CORPORATION
50 W San Fernando St
Suite 950
San Jose, CA 95113

VTA
3331 N First St
Building B
San Jose, Ca 95134

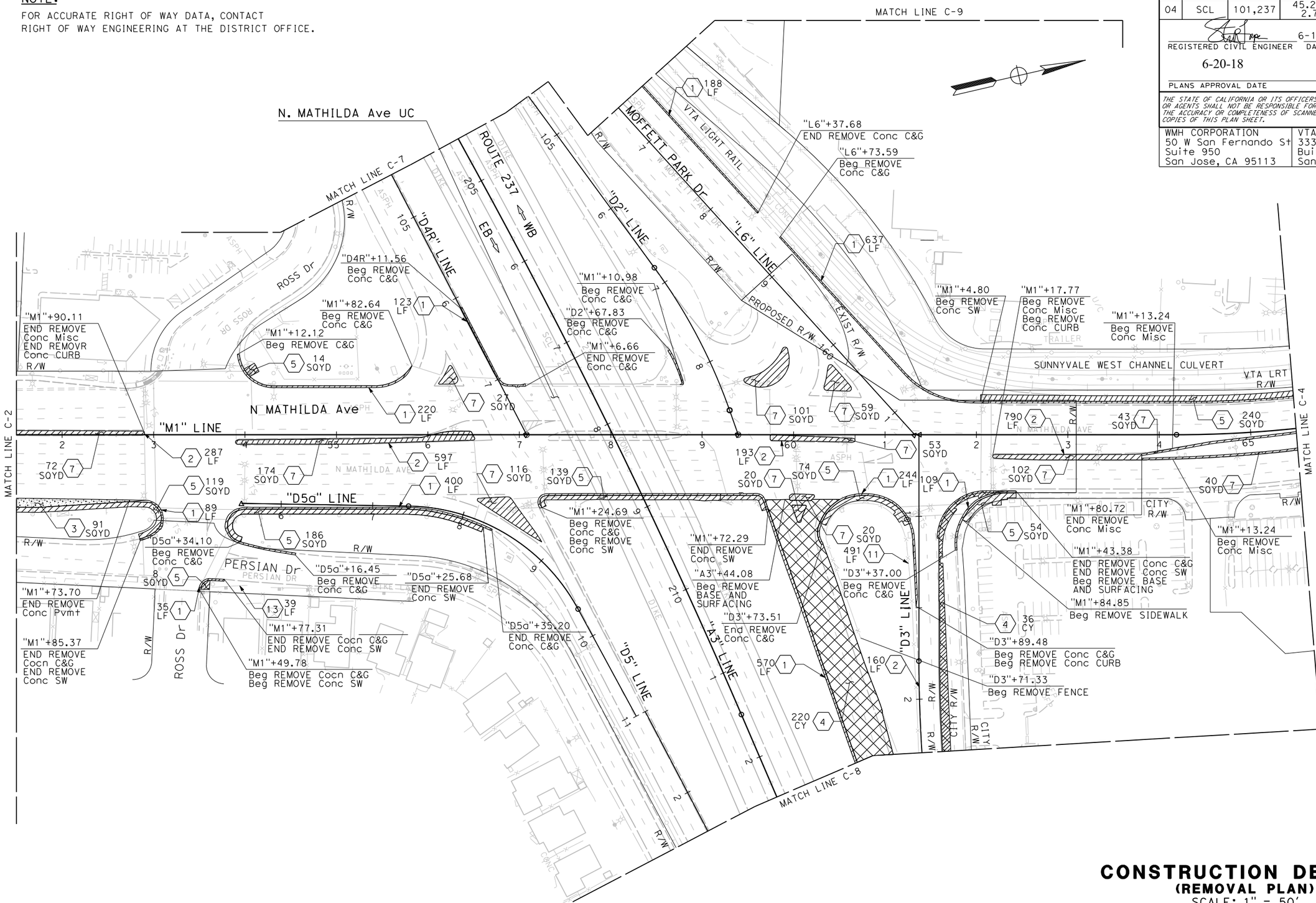

FOR NOTES AND ABBREVIATIONS AND LEGEND, SEE SHEET C-1

CONSTRUCTION DETAILS
(REMOVAL PLAN)
SCALE: 1" = 50'

C-3

STATE OF CALIFORNIA - DEPARTMENT OF TRANSPORTATION
Caltrans

CONSULTANT FUNCTIONAL SUPERVISOR: TIMOTHY J. LEE
CALCULATED-DESIGNED BY: EILI FARAH
CHECKED BY: STEVE LOUPE
REVISED BY: SCV
DATE REVISED: 01/15/18

X:\237_101_Mathilda\000_CAD\Sheets\GA-Const_Details\0413000204ga003.dgn

LAST REVISION 01-15-18
DATE PLOTTED => 6/20/2018
TIME PLOTTED => 11:02:07 AM

BORDER LAST REVISED 7/2/2010
USERNAME => Eilif
DGN FILE => 0413000204ga003.dgn
RELATIVE BORDER SCALE IS IN INCHES 0 1 2 3
UNIT 0000
PROJECT NUMBER & PHASE 0413000204

NOTE:

FOR ACCURATE RIGHT OF WAY DATA, CONTACT
RIGHT OF WAY ENGINEERING AT THE DISTRICT OFFICE.

Dist	COUNTY	ROUTE	POST MILES TOTAL PROJECT	SHEET No.	TOTAL SHEETS
04	SCL	101,237	45.2/45.8, 2.7/3.3	34	736

REGISTERED CIVIL ENGINEER — 6-13-18 DATE

6-20-18
PLANS APPROVAL DATE

REGISTERED PROFESSIONAL ENGINEER — STEVE LOUPE — No. 63575 — Exp. 9/30/18 — CIVIL — STATE OF CALIFORNIA

THE STATE OF CALIFORNIA OR ITS OFFICERS OR AGENTS SHALL NOT BE RESPONSIBLE FOR THE ACCURACY OR COMPLETENESS OF SCANNED COPIES OF THIS PLAN SHEET.

WMH CORPORATION
50 W San Fernando St
Suite 950
San Jose, CA 95113

VTA
3331 N First St
Building B
San Jose, Ca 95134

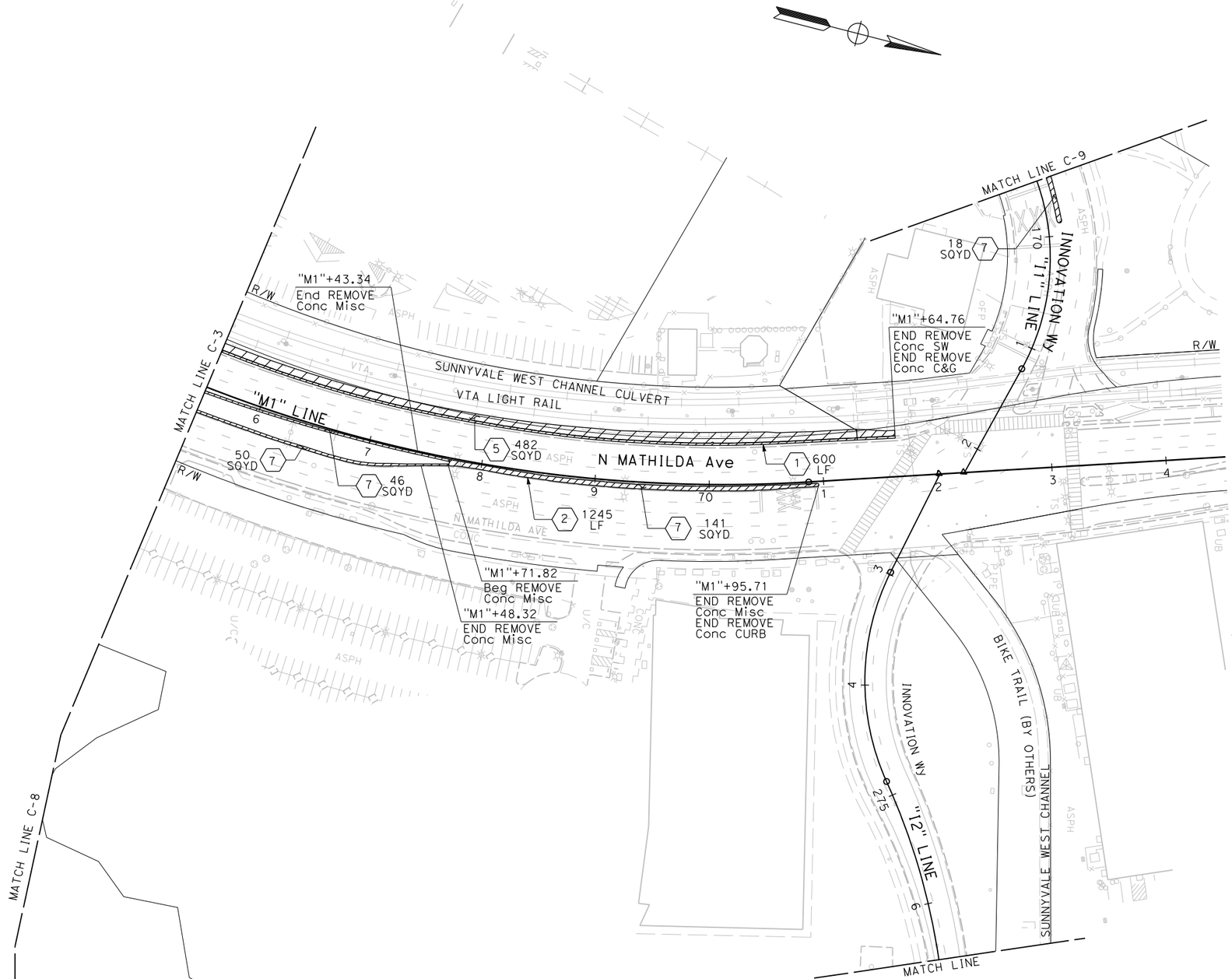

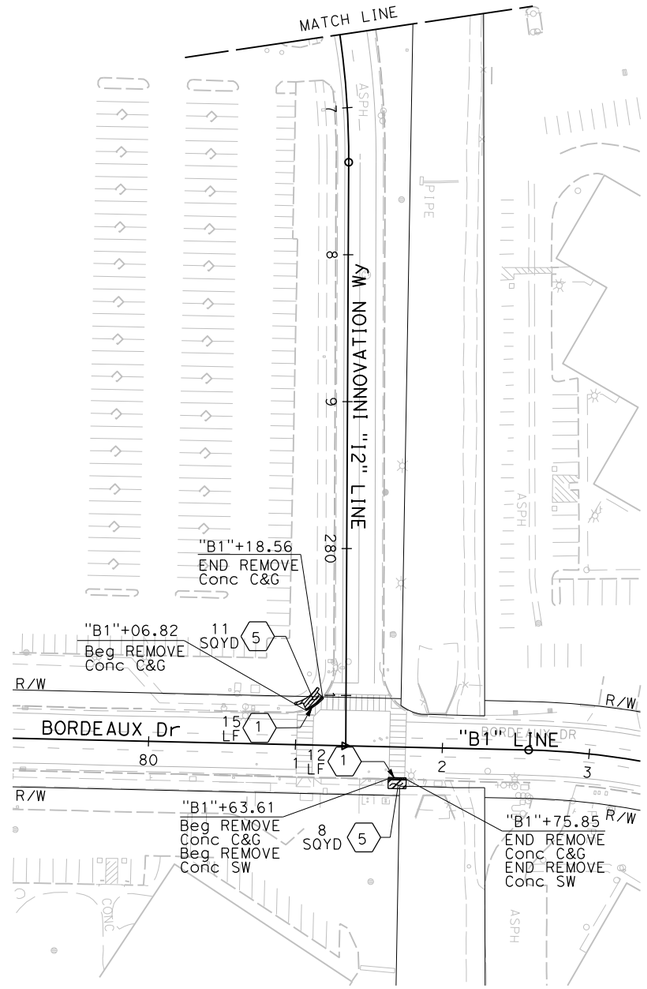

FOR NOTES AND ABBREVIATIONS AND LEGEND, SEE SHEET C-1

CONSTRUCTION DETAILS
(REMOVAL PLAN)
SCALE: 1" = 50'

C-4

CALCULATED-DESIGNED BY	EILI FARAH	REVISED BY	SCV
CHECKED BY	STEVE LOUPE	DATE REVISED	01/15/18
SUPERVISOR	TIMOTHY J. LEE	CONSULTANT FUNCTIONAL SUPERVISOR	

STATE OF CALIFORNIA - DEPARTMENT OF TRANSPORTATION

X:\237_101_Mathilda\000_CAD\Sheets\GA-Const Details\0413000204ga004.dgn

LAST REVISION 01-15-18 | DATE PLOTTED => 6/20/2018 | TIME PLOTTED => 11:02:10 AM

BORDER LAST REVISED 7/2/2010 | USERNAME => Eilif | DGN FILE => 0413000204ga004.dgn | RELATIVE BORDER SCALE IS IN INCHES 0 1 2 3 | UNIT 0000 | PROJECT NUMBER & PHASE 0413000204

NOTE:

FOR ACCURATE RIGHT OF WAY DATA, CONTACT
RIGHT OF WAY ENGINEERING AT THE DISTRICT OFFICE.

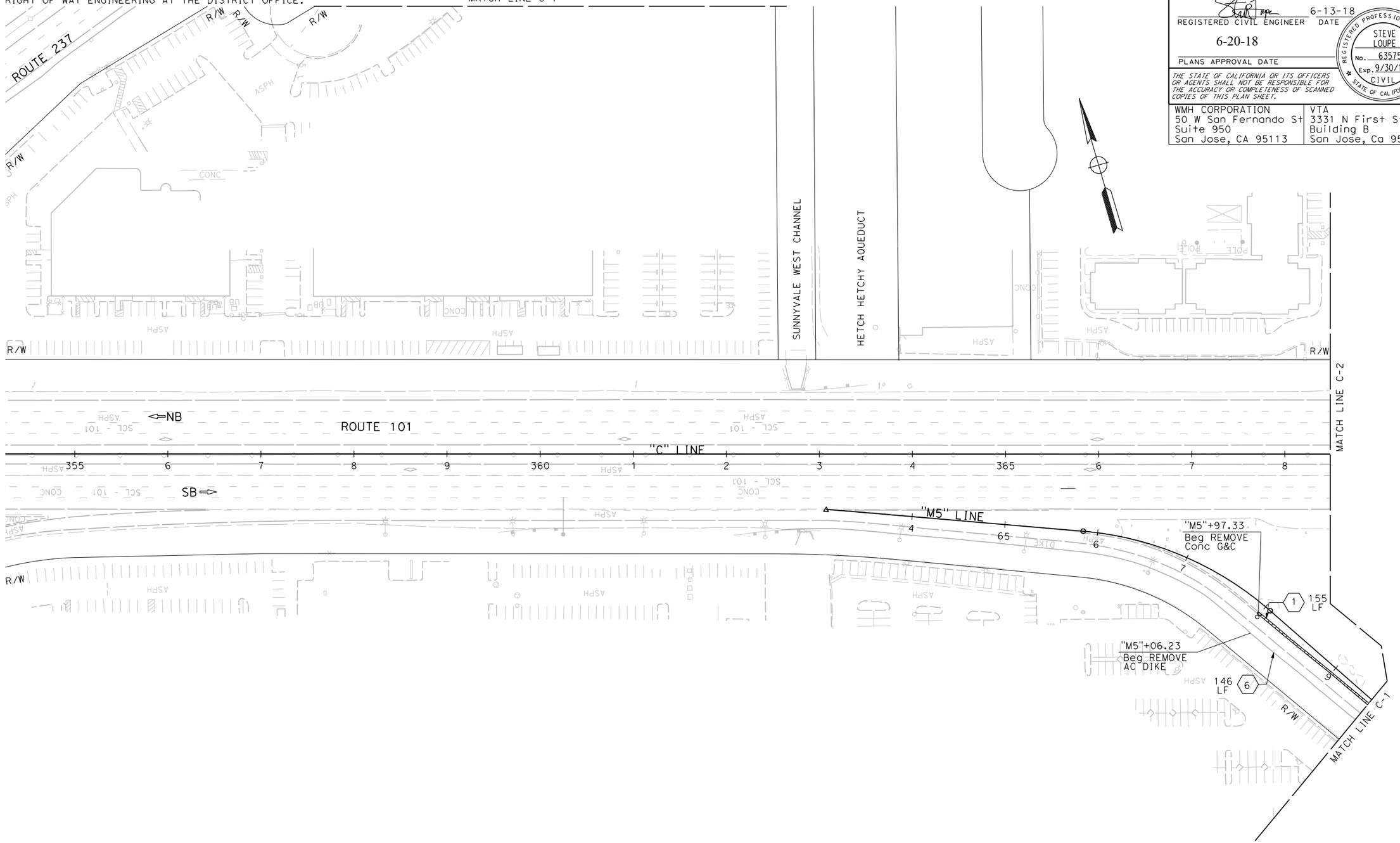

FOR NOTES AND ABBREVIATIONS
AND LEGEND, SEE SHEET C-1

CONSTRUCTION DETAILS
(REMOVAL PLAN)
SCALE: 1" = 50'

C-5

Dist	COUNTY	ROUTE	POST MILES TOTAL PROJECT	SHEET No.	TOTAL SHEETS
04	SCL	101,237	45.2/45.8, 2.7/3.3	35	736

6-13-18
REGISTERED CIVIL ENGINEER — DATE

STEVE LOUPE
No. 63575
Exp. 9/30/18
CIVIL
REGISTERED PROFESSIONAL ENGINEER
STATE OF CALIFORNIA

6-20-18
PLANS APPROVAL DATE

THE STATE OF CALIFORNIA OR ITS OFFICERS OR AGENTS SHALL NOT BE RESPONSIBLE FOR THE ACCURACY OR COMPLETENESS OF SCANNED COPIES OF THIS PLAN SHEET.

WMH CORPORATION
50 W San Fernando St
Suite 950
San Jose, CA 95113

VTA
3331 N First St
Building B
San Jose, Ca 95134

REVISED BY	DATE REVISED
SCV	01/15/18

EILI FARAH — CALCULATED-DESIGNED BY
STEVE LOUPE — CHECKED BY
TIMOTHY J. LEE — CONSULTANT FUNCTIONAL SUPERVISOR

STATE OF CALIFORNIA - DEPARTMENT OF TRANSPORTATION
Caltrans®

X:\237_101_Mathilda\000_CAD\Sheets\VGA-Const_Details\0413000204ga005.dgn

LAST REVISION 01-15-18 | DATE PLOTTED => 6/20/2018 | TIME PLOTTED => 11:02:12 AM

BORDER LAST REVISED 7/2/2010 | USERNAME => Eilif | DGN FILE => 0413000204ga005.dgn | RELATIVE BORDER SCALE IS IN INCHES 0 1 2 3 | UNIT 0000 | PROJECT NUMBER & PHASE 0413000204

NOTE:

FOR ACCURATE RIGHT OF WAY DATA, CONTACT
RIGHT OF WAY ENGINEERING AT THE DISTRICT OFFICE.

Dist	COUNTY	ROUTE	POST MILES TOTAL PROJECT	SHEET No.	TOTAL SHEETS
04	SCL	101,237	45.2/45.8, 2.7/3.3	36	736

REGISTERED CIVIL ENGINEER — 6-13-18 DATE

6-20-18
PLANS APPROVAL DATE

REGISTERED PROFESSIONAL ENGINEER — STEVE LOUPE — No. 63575 — Exp. 9/30/18 — CIVIL — STATE OF CALIFORNIA

THE STATE OF CALIFORNIA OR ITS OFFICERS OR AGENTS SHALL NOT BE RESPONSIBLE FOR THE ACCURACY OR COMPLETENESS OF SCANNED COPIES OF THIS PLAN SHEET.

WMH CORPORATION 50 W San Fernando St Suite 950 San Jose, CA 95113	VTA 3331 N First St Building B San Jose, Ca 95134

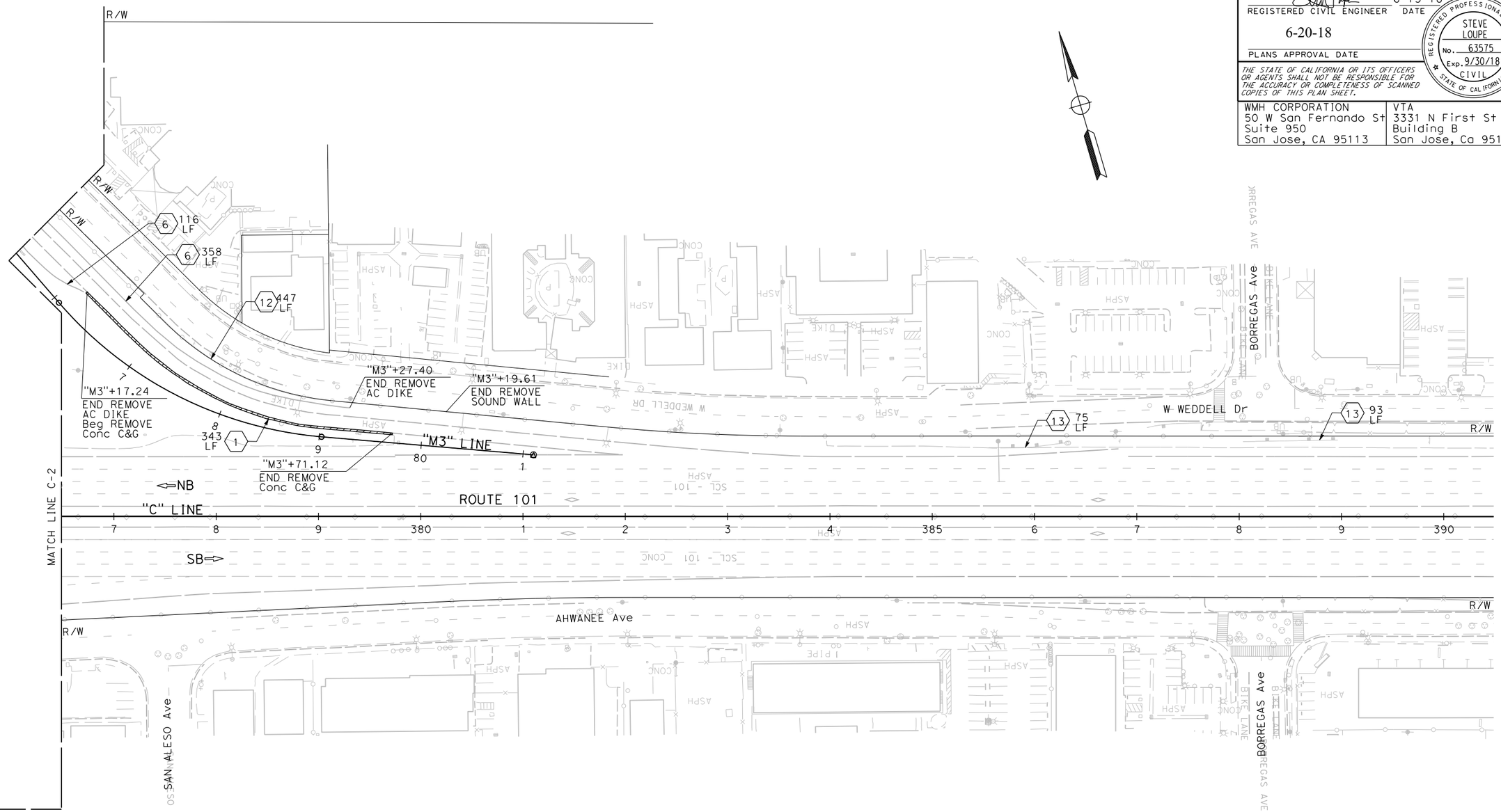

FOR NOTES AND ABBREVIATIONS AND LEGEND, SEE SHEET C-1

CONSTRUCTION DETAILS
(REMOVAL PLAN)
SCALE: 1" = 50'

C-6

CALCULATED-DESIGNED BY	CHECKED BY	REVISED BY	DATE REVISED
EILI FARAH	STEVE LOUPE	SCV	01/15/18

CONSULTANT FUNCTIONAL SUPERVISOR: TIMOTHY J. LEE

STATE OF CALIFORNIA - DEPARTMENT OF TRANSPORTATION

LAST REVISION 01-15-18 | DATE PLOTTED => 6/20/2018 | TIME PLOTTED => 11:02:14 AM

X:\237_101_Morrilde\000_CAD\Sheets\GA-Const_Details\0413000204ga006.dgn

BORDER LAST REVISED 7/2/2010 | USERNAME => Eilif | DGN FILE => 0413000204ga006.dgn | RELATIVE BORDER SCALE IS IN INCHES 0 1 2 3 | UNIT 0000 | PROJECT NUMBER & PHASE 0413000204

NOTE:

FOR ACCURATE RIGHT OF WAY DATA, CONTACT RIGHT OF WAY ENGINEERING AT THE DISTRICT OFFICE.

Dist	COUNTY	ROUTE	POST MILES TOTAL PROJECT	SHEET No.	TOTAL SHEETS
04	SCL	101,237	45.2/45.8, 2.7/3.3	37	736

REGISTERED CIVIL ENGINEER 6-13-18 DATE

6-20-18

PLANS APPROVAL DATE

REGISTERED PROFESSIONAL ENGINEER STEVE LOUPE No. 63575 Exp. 9/30/18 CIVIL STATE OF CALIFORNIA

THE STATE OF CALIFORNIA OR ITS OFFICERS OR AGENTS SHALL NOT BE RESPONSIBLE FOR THE ACCURACY OR COMPLETENESS OF SCANNED COPIES OF THIS PLAN SHEET.

WMH CORPORATION
50 W San Fernando St
Suite 950
San Jose, CA 95113

VTA
3331 N First St
Building B
San Jose, Ca 95134

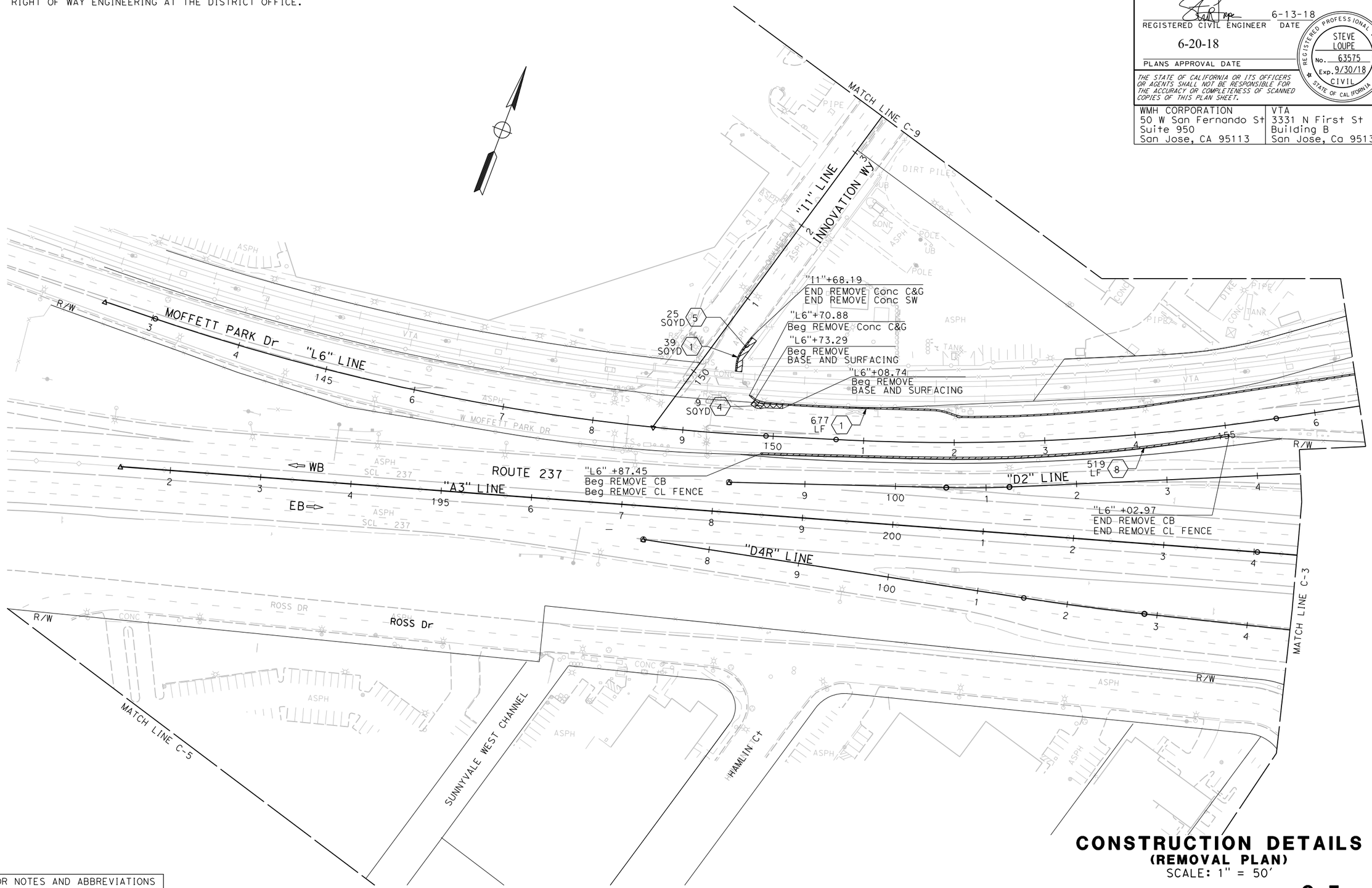

FOR NOTES AND ABBREVIATIONS AND LEGEND, SEE SHEET C-1

CONSTRUCTION DETAILS
(REMOVAL PLAN)
SCALE: 1" = 50'

C-7

STATE OF CALIFORNIA - DEPARTMENT OF TRANSPORTATION

Caltrans

CONSULTANT FUNCTIONAL SUPERVISOR: TIMOTHY J. LEE

CALCULATED-DESIGNED BY: EILI FARAH

CHECKED BY: STEVE LOUPE

REVISED BY: SCV

DATE REVISED: 01/15/18

X:\237_101_Mathilda\000_CAD\Sheets\GA-Const_Details\0413000204ga007.dgn

LAST REVISION 01-15-18

DATE PLOTTED => 6/20/2018
TIME PLOTTED => 11:02:17 AM

BORDER LAST REVISED 7/2/2010

USERNAME => Eilif
DGN FILE => 0413000204ga007.dgn

RELATIVE BORDER SCALE IS IN INCHES 0 1 2 3

UNIT 0000

PROJECT NUMBER & PHASE 0413000204

NOTE:

FOR ACCURATE RIGHT OF WAY DATA, CONTACT
RIGHT OF WAY ENGINEERING AT THE DISTRICT OFFICE.

Dist	COUNTY	ROUTE	POST MILES TOTAL PROJECT	SHEET No.	TOTAL SHEETS
04	SCL	101,237	45.2/45.8, 2.7/3.3	38	736

REGISTERED CIVIL ENGINEER — 6-13-18 DATE

6-20-18
PLANS APPROVAL DATE

REGISTERED PROFESSIONAL ENGINEER — STEVE LOUPE — No. 63575 — Exp. 9/30/18 — CIVIL — STATE OF CALIFORNIA

THE STATE OF CALIFORNIA OR ITS OFFICERS OR AGENTS SHALL NOT BE RESPONSIBLE FOR THE ACCURACY OR COMPLETENESS OF SCANNED COPIES OF THIS PLAN SHEET.

WMH CORPORATION 50 W San Fernando St Suite 950 San Jose, CA 95113	VTA 3331 N First St Building B San Jose, Ca 95134

MATCH LINE C-4

BORDEAUX Dr

"B1" LINE

CITY R/W

85 CY (4)

"B1"+58.92
END REMOVE Conc C&G
END REMOVE Conc SW

46 SQYD (5)

"B1"+73.31
Beg REMOVE Conc C&G
Beg REMOVE Conc SW

"D3"+39.27
END REMOVE BASE AND SURFACING

"D3" LINE

MATCH LINE C-3

72 CY (4)

"A3"+71.08
Beg REMOVE Conc C&G

"A3"+01.24
END REMOVE BASE AND SURFACING

WB

EB

568 LF (1)

"A3"+89.21
END REMOVE AC DIKE

20 LF (6)

"A3"+16.21
END REMOVE Conc C&G

675 LF (1)

"A3"+48.80
END REMOVE Conc C&G

"A3"+19.76
Beg REMOVE AC DIKE

"D5" LINE

PERSIAN Dr

BRADFORD Dr

MOFFETT PARK Dr

72 LF (13)

1434 LF (11)

ROUTE 237

1408 LF (2)

51 LF (13)

CITY R/W

"B1"+72.12
END REMOVE Conc CURB
"B1"+23.75
END REMOVE FENCE

R/W

"A3" LINE

PLAZA Dr

BORREGAS Ave

CONSTRUCTION DETAILS
(REMOVAL PLAN)
SCALE: 1" = 50'

C-8

FOR NOTES AND ABBREVIATIONS AND LEGEND, SEE SHEET C-1

CALCULATED-DESIGNED BY	EILI FARAH			
CHECKED BY	STEVE LOUPE			
CONSULTANT FUNCTIONAL SUPERVISOR	TIMOTHY J. LEE			
		REVISED BY	SCV	01/15/18
		DATE REVISED		

STATE OF CALIFORNIA - DEPARTMENT OF TRANSPORTATION

Caltrans

X:\237_101_Mathilda\000_CAD\Sheets\GA-Const Details\0413000204ga008.dgn

LAST REVISION: DATE PLOTTED => 6/20/2018
01-15-18 TIME PLOTTED => 11:02:19 AM

BORDER LAST REVISED 7/2/2010 | USERNAME => Eilif | DGN FILE => 0413000204ga008.dgn | RELATIVE BORDER SCALE IS IN INCHES 0 1 2 3 | UNIT 0000 | PROJECT NUMBER & PHASE 0413000204

NOTE:

FOR ACCURATE RIGHT OF WAY DATA, CONTACT
RIGHT OF WAY ENGINEERING AT THE DISTRICT OFFICE.

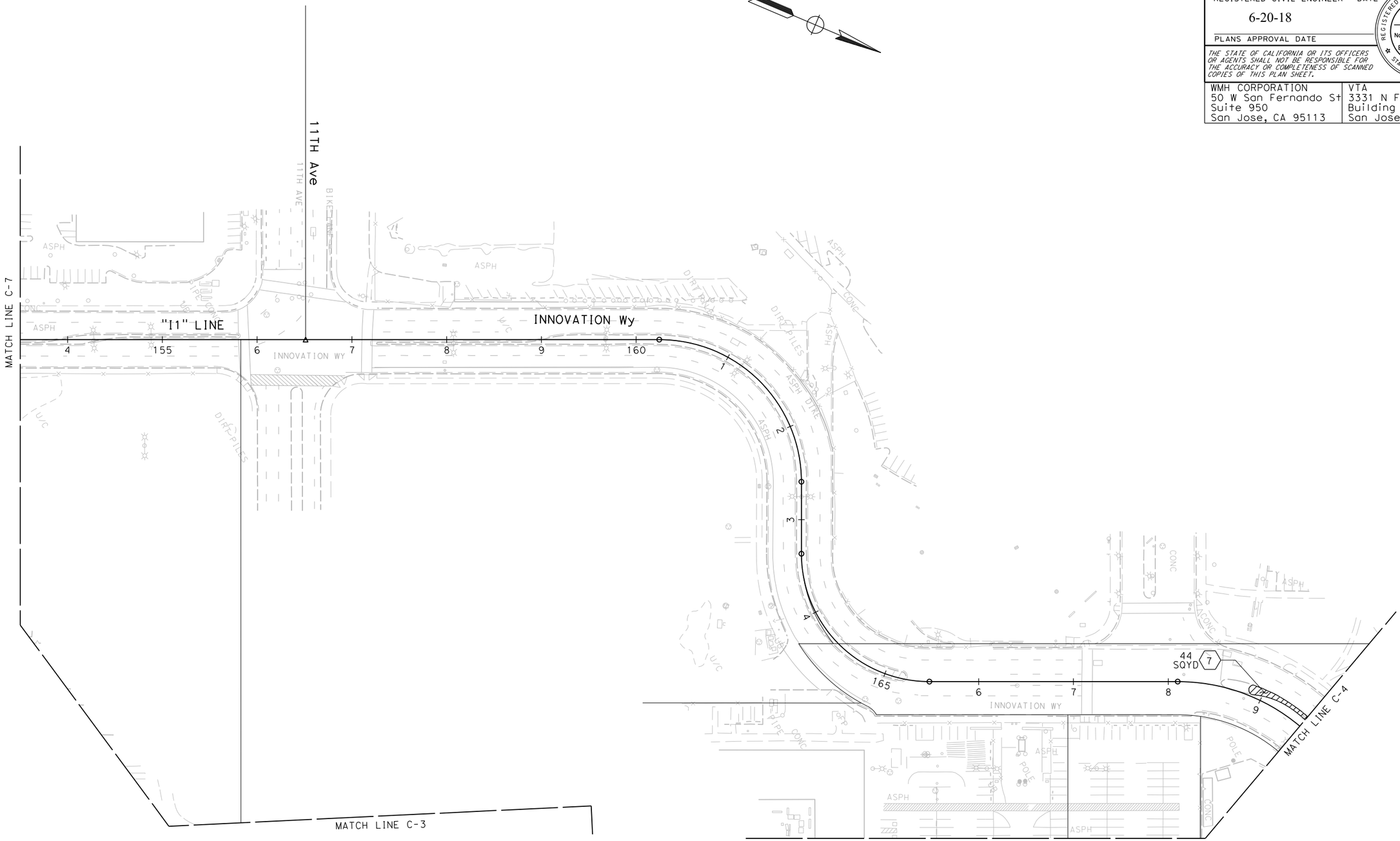

FOR NOTES AND ABBREVIATIONS AND LEGEND, SEE SHEET C-1

CONSTRUCTION DETAILS
(REMOVAL PLAN)

SCALE: 1" = 50'

C-9

Dist	COUNTY	ROUTE	POST MILES TOTAL PROJECT	SHEET No.	TOTAL SHEETS
04	SCL	101,237	45.2/45.8, 2.7/3.3	39	736

REGISTERED CIVIL ENGINEER — 6-13-18 DATE

6-20-18
PLANS APPROVAL DATE

REGISTERED PROFESSIONAL ENGINEER — STEVE LOUPE — No. 63575 — Exp. 9/30/18 — CIVIL — STATE OF CALIFORNIA

THE STATE OF CALIFORNIA OR ITS OFFICERS OR AGENTS SHALL NOT BE RESPONSIBLE FOR THE ACCURACY OR COMPLETENESS OF SCANNED COPIES OF THIS PLAN SHEET.

WMH CORPORATION
50 W San Fernando St
Suite 950
San Jose, CA 95113

VTA
3331 N First St
Building B
San Jose, Ca 95134

REVISED BY	DATE REVISED
SCV	01/15/18

CALCULATED-DESIGNED BY: EILI FARAH
CHECKED BY: STEVE LOUPE
DRAWN BY
CONSULTANT FUNCTIONAL SUPERVISOR: TIMOTHY J. LEE

STATE OF CALIFORNIA - DEPARTMENT OF TRANSPORTATION
Caltrans

X:\237_101_Mathilda\000_CAD\Sheets\GA-Const_Details\0413000204ga009.dgn

LAST REVISION 01-15-18
DATE PLOTTED => 6/20/2018
TIME PLOTTED => 11:02:21 AM

BORDER LAST REVISED 7/2/2010 | USERNAME => Eilif | DGN FILE => 0413000204ga009.dgn | RELATIVE BORDER SCALE IS IN INCHES 0 1 2 3 | UNIT 0000 | PROJECT NUMBER & PHASE 0413000204

Dist	COUNTY	ROUTE	POST MILES TOTAL PROJECT	SHEET No.	TOTAL SHEETS
04	SCL	101,237	45.2/45.8, 2.7/3.3	40	736

REGISTERED CIVIL ENGINEER — 6-13-18 DATE

6-20-18
PLANS APPROVAL DATE

REGISTERED PROFESSIONAL ENGINEER — STEVE LOUPE — No. 63575 — Exp. 9/30/18 — CIVIL — STATE OF CALIFORNIA

THE STATE OF CALIFORNIA OR ITS OFFICERS OR AGENTS SHALL NOT BE RESPONSIBLE FOR THE ACCURACY OR COMPLETENESS OF SCANNED COPIES OF THIS PLAN SHEET.

WMH CORPORATION 50 W San Fernando St Suite 950 San Jose, CA 95113	VTA 3331 N First St Building B San Jose, Ca 95134

NOTES:

1. FOR ACCURATE RIGHT OF WAY DATA, CONTACT RIGHT OF WAY ENGINEERING AT THE DISTRICT OFFICE.
2. EXCAVATED ADL SOIL (COM AND TYPE R-1) SHALL BE REUSED ON-SITE BY PLACING UNDER PAVEMENT STRUCTURAL SECTION OR UNDER 1' MINIMUM CLEAN FILL AND A MINIMUM OF 5' ABOVE THE MAXIMUM GROUNDWATER TABLE ELEVATION.

LEGEND

TYPE COM AND TYPE R-1 MATERIAL TO BE EXCAVATED (0' TO 2.0' DEEP)

ALLOWABLE PLACEMENT LOCATION FOR TYPE COM AND TYPE R-1 MATERIAL

ABBREVIATIONS:

ADL AERIALLY DEPOSITED LEAD

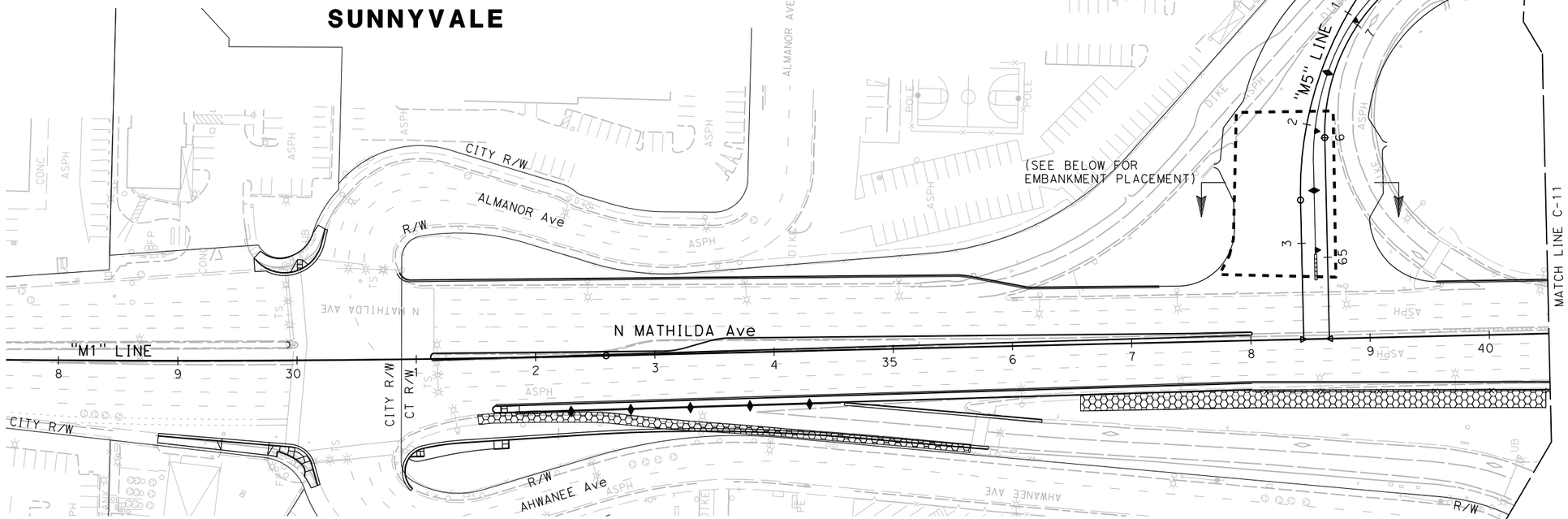

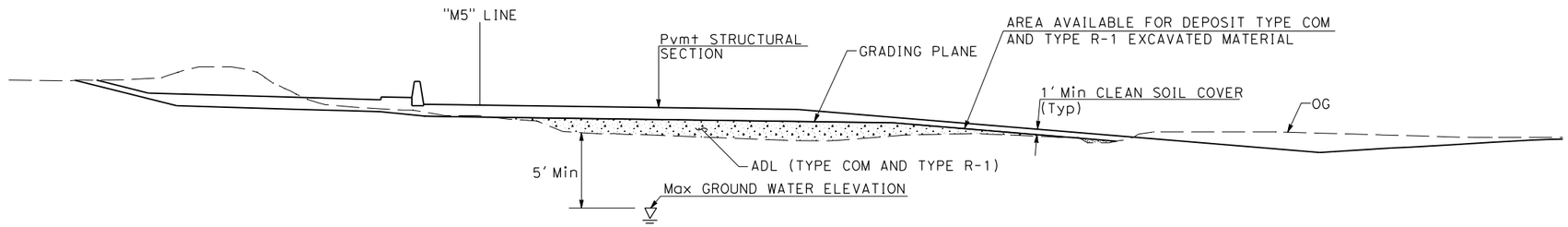

TYPICAL SECTION

"M5" 71+50 TO 73+20

SB US 101 OFF-RAMP

APPROVED FOR AERIALLY DEPOSITED LEAD WORK ONLY

CONSTRUCTION DETAILS
AERIALLY DEPOSITED LEAD
SCALE: 1" = 50'

C-10

REVISED BY	SCV		
DATE REVISED	01/15/18		
CALCULATED-DESIGNED BY	EILI FARAH		
CHECKED BY	STEVE LOUPE		
CONSULTANT FUNCTIONAL SUPERVISOR	TIMOTHY J. LEE		
STATE OF CALIFORNIA - DEPARTMENT OF TRANSPORTATION	Caltrans		

LAST REVISION 01-15-18 — DATE PLOTTED => 6/20/2018 — TIME PLOTTED => 11:02:23 AM

X:\Y237_101_Mathilda\000_CAD\Sheets\GA-Const Details\0413000204ga010.dgn

BORDER LAST REVISED 7/2/2010 | USERNAME => Eilif | DGN FILE => 0413000204ga010.dgn | RELATIVE BORDER SCALE IS IN INCHES 0 1 2 3 | UNIT 0000 | PROJECT NUMBER & PHASE 0413000204

NOTE:

FOR ACCURATE RIGHT OF WAY DATA, CONTACT
RIGHT OF WAY ENGINEERING AT THE DISTRICT OFFICE.

Dist	COUNTY	ROUTE	POST MILES TOTAL PROJECT	SHEET No.	TOTAL SHEETS
04	SCL	101,237	45.2/45.8, 2.7/3.3	41	736

REGISTERED CIVIL ENGINEER — 6-13-18 DATE

6-20-18
PLANS APPROVAL DATE

REGISTERED PROFESSIONAL ENGINEER
STEVE LOUPE
No. 63575
Exp. 9/30/18
CIVIL
STATE OF CALIFORNIA

THE STATE OF CALIFORNIA OR ITS OFFICERS OR AGENTS SHALL NOT BE RESPONSIBLE FOR THE ACCURACY OR COMPLETENESS OF SCANNED COPIES OF THIS PLAN SHEET.

WMH CORPORATION 50 W San Fernando St Suite 950 San Jose, CA 95113	VTA 3331 N First St Building B San Jose, Ca 95134

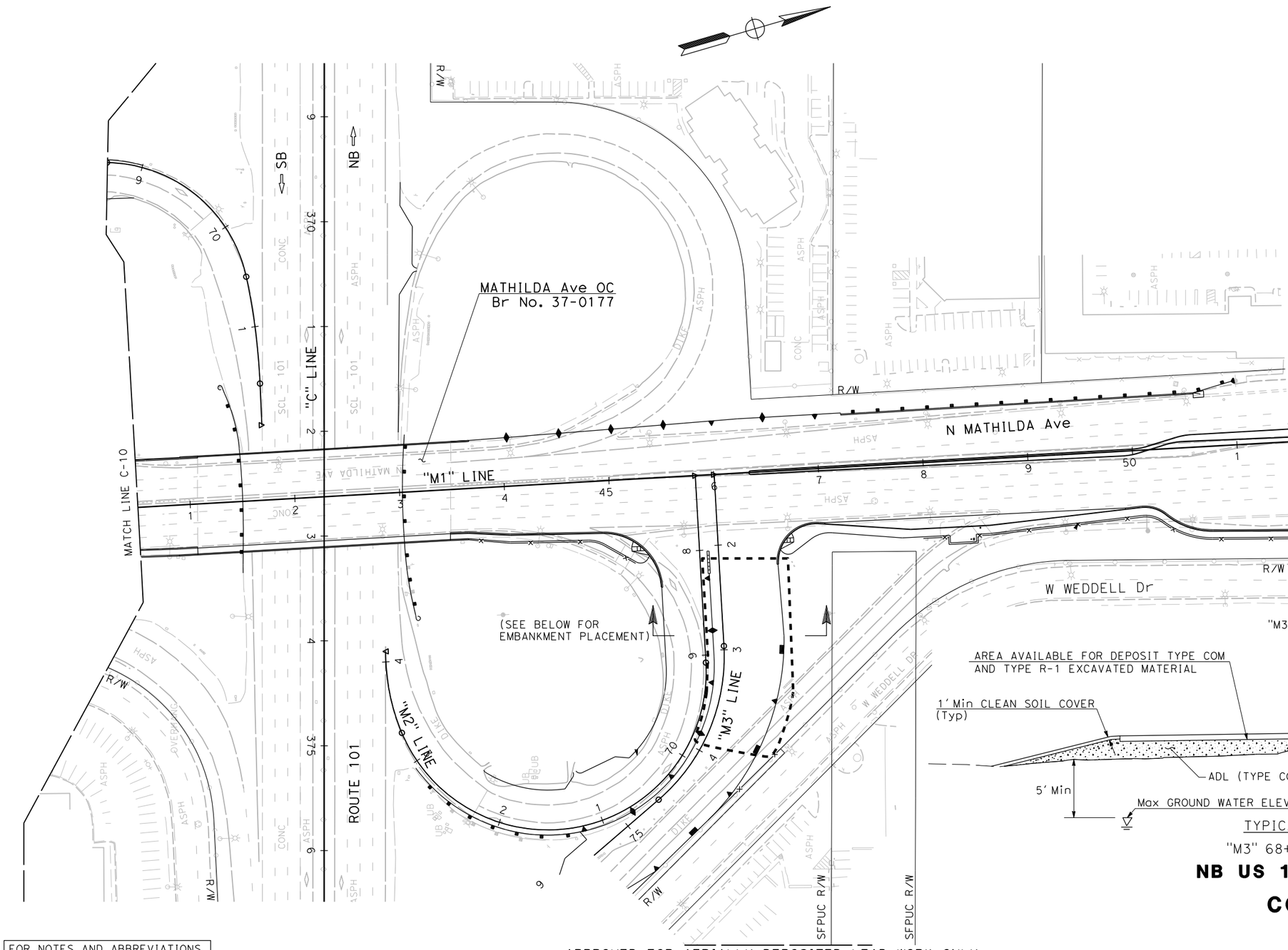

"M3" Line

AREA AVAILABLE FOR DEPOSIT TYPE COM AND TYPE R-1 EXCAVATED MATERIAL

Pvmt STRUCTURAL SECTION

GRADING PLANE

OG

1' Min CLEAN SOIL COVER (Typ)

ADL (TYPE COM AND TYPE R-1)

5' Min

Max GROUND WATER ELEVATION

TYPICAL SECTION

"M3" 68+10 to 69+90

NB US 101 OFF-RAMP

CONSTRUCTION DETAILS
AERIALLY DEPOSITED LEAD

SCALE: 1" = 50'

C-11

FOR NOTES AND ABBREVIATIONS AND LEGEND, SEE SHEET C-10

APPROVED FOR AERIALLY DEPOSITED LEAD WORK ONLY

CALCULATED-DESIGNED BY	EILI FARAH		
CHECKED BY	STEVE LOUPE	DATE REVISED	01/15/18
CONSULTANT FUNCTIONAL SUPERVISOR	TIMOTHY J. LEE	REVISED BY	SCV

STATE OF CALIFORNIA - DEPARTMENT OF TRANSPORTATION
Caltrans

LAST REVISION: 01-15-18
DATE PLOTTED => 6/20/2018
TIME PLOTTED => 11:02:25 AM

X:\237_101_Mathilda\V000_CAD\Sheets\GA-Const Details\0413000204ga011.dgn

BORDER LAST REVISED 7/2/2010 | USERNAME => Eilif | DGN FILE => 0413000204ga011.dgn | RELATIVE BORDER SCALE IS IN INCHES 0 1 2 3 | UNIT 0000 | PROJECT NUMBER & PHASE 0413000204

NOTE:

FOR ACCURATE RIGHT OF WAY DATA, CONTACT
RIGHT OF WAY ENGINEERING AT THE DISTRICT OFFICE.

Dist	COUNTY	ROUTE	POST MILES TOTAL PROJECT	SHEET No.	TOTAL SHEETS
04	SCL	101,237	45.2/45.8, 2.7/3.3	42	736

REGISTERED CIVIL ENGINEER 6-13-18 DATE

6-20-18
PLANS APPROVAL DATE

REGISTERED PROFESSIONAL ENGINEER STEVE LOUPE No. 63575 Exp. 9/30/18 CIVIL STATE OF CALIFORNIA

THE STATE OF CALIFORNIA OR ITS OFFICERS OR AGENTS SHALL NOT BE RESPONSIBLE FOR THE ACCURACY OR COMPLETENESS OF SCANNED COPIES OF THIS PLAN SHEET.

WMH CORPORATION
50 W San Fernando St
Suite 950
San Jose, CA 95113

VTA
3331 N First St
Building B
San Jose, Ca 95134

FOR NOTES AND ABBREVIATIONS AND LEGEND, SEE SHEET C-10

APPROVED FOR AERIALLY DEPOSITED LEAD WORK ONLY

CONSTRUCTION DETAILS
AERIALLY DEPOSITED LEAD
SCALE: 1" = 50'

C-12

STATE OF CALIFORNIA - DEPARTMENT OF TRANSPORTATION
Caltrans

CONSULTANT FUNCTIONAL SUPERVISOR	TIMOTHY J. LEE
CALCULATED-DESIGNED BY	EILI FARAH
CHECKED BY	STEVE LOUPE
REVISED BY	SCV
DATE REVISED	01/15/18

X:\237_101_Mathilda\000_CAD\Sheets\GA-Const_Details\0413000204ga012.dgn

LAST REVISION 01-15-18
DATE PLOTTED => 6/20/2018
TIME PLOTTED => 11:02:27 AM

BORDER LAST REVISED 7/2/2010
USERNAME => Eilif
DGN FILE => 0413000204ga012.dgn
RELATIVE BORDER SCALE IS IN INCHES 0 1 2 3
UNIT 0000
PROJECT NUMBER & PHASE 0413000204

NOTE: FOR ACCURATE RIGHT OF WAY DATA, CONTACT RIGHT OF WAY ENGINEERING AT THE DISTRICT OFFICE.

NOTES:
1. ALL ELEVATIONS SHOWN AT 50 FOOT INTERVALS.
2. ELEVATIONS SHOWN ARE TOP OF PAVEMENT AND SPOT GRADES.

ABBREVIATIONS

(XX.XX)	EXISTING ELEVATION
LIP	LIP OF GUTTER
TOC	TOP OF CURB
BOW	BACK OF WALK
C&G	CURB AND GUTTER
BPGL	BARRIER PROFILE GRADE LEFT
BPGR	BARRIER PROFILE GRADE RIGHT
SFPUC	SAN FRANCISCO PUBLIC UTILITIES COMMISSION
LRT	LIGHT RAIL TRACK

Dist	COUNTY	ROUTE	POST MILES TOTAL PROJECT	SHEET No.	TOTAL SHEETS
04	SCL	101,237	45.2/45.8, 2.7/3.3	43	736

6-13-18
REGISTERED CIVIL ENGINEER DATE

STEVE LOUPE No. 63575 Exp. 9/30/20 CIVIL — REGISTERED PROFESSIONAL ENGINEER — STATE OF CALIFORNIA

6-20-18
PLANS APPROVAL DATE

THE STATE OF CALIFORNIA OR ITS OFFICERS OR AGENTS SHALL NOT BE RESPONSIBLE FOR THE ACCURACY OR COMPLETENESS OF SCANNED COPIES OF THIS PLAN SHEET.

WMH CORPORATION
50 W San Fernando St
Suite 950
San Jose, CA 95113

VTA
3331 N First St
Building B
San Jose, Ca 95134

CURVE DATA

No. Ⓡ	R	Δ	T	L
1	20.50′	69°45′15"	14.29′	24.96′
2	35.50′	24°46′09"	7.79′	15.35′
3	393.50	1°08′28"	3.91′	7.83′
4	1.50′	106°33′38"	2.01′	2.79′
5	20.00′	125°24′42"	38.76′	43.78′
6	200.00′	8°21′47"	14.62′	29.19′
7	10.00′	45°02′49"	4.15′	7.86′
8	300.00′	8°21′47"	21.93′	43.79′
9	1500.0′	8°34′59"	112.52′	224.70′
10	32.11′	125°39′16"	62.55′	70.42′
11	24.00′	62°01′36"	14.43′	25.98′
12	37.78′	18°14′29"	6.07′	12.03′
13	27.98′	35°31′29"	8.96′	17.35′
14	10.00′	69°51′13"	6.98′	12.19′
15	8.00′	50°36′57"	3.78′	7.07′

SUNNYVALE

113.14′ Lt "M1" 30+18.68
CONFORM TO Exist SW

106.72′ Lt "M1" 30+14.31 EC
ANGLE POINT, BOW 37.38

97.33′ Lt "M1" 30+21.42 EC
FL 36.75

92.54′ Lt "M1" 30+04.75 PCC
BOW 37.28

109.71′ Lt "M1" 30+24.61
END CITY CURB (TYPE II-24")
CONFORM TO Exist C&G

86.66′ Lt "M1" 29+94.25 PCC
BOW 36.19

61.93′ Lt "M1" 30+27.37
S/C ANGLE POINT, FG 37.27

76.81′ Lt "M1" 29+75.09
END CITY CURB (TYPE I-6)
Beg CITY CURB (TYPE II-24")

61.93′ Lt "M1" 30+27.37
S/C ANGLE POINT, FG 37.16

91.67′ Lt "M1" 29+69.89 BC
CONFORM TO Exist SW

91.74′ Lt "M1" 30+81.94
S/C ANGLE POINT, FG 36.35

85.54′ Lt "M1" 29+65.40 BC
FL 37.01

72.62′ Lt "M1" 30+86.73 BC
Beg Trans (CITY TYPE II-24" TO A2-6 Mod)
CONFORM TO Exist C&G
FL 36.30

85.88′ Lt "M1" 29+64.25
Beg CITY CURB (TYPE I-6)
CONFORM Exist CURB

ALMANOR Ave

66.03′ Lt "M1" 30+96.15 EC
END Trans (CITY TYPE II-24" TO A2-6 Mod)
Beg CURB (TYPE A2-6 Mod)
FL 36.23

74.45′ Lt "M1" 29+65.00
ANGLE POINT, FG 36.65

FL 36.20 FL 36.03 FL 35.84

75.03′ Lt "M1" 29+74.16
FG 37.01

RAMP PER CITY STD 13C-1
SEE CURB RAMPS Const Det

62.00′ Lt "M1" 29+65.00
S/C ANGLE POINT, FG 37.19

58.58′ Lt "M1" 30+83.82
S/C ANGLE POINT, FG 36.79

MATHILDA Ave

15.47′ Lt "M1" 29+64.99
S/C ANGLE POINT, FL 38.63

15.63′ Lt "M1" 29+91.41 BC
FL 38.26, CONFORM
R=2.48′

1.77′ Lt "M1" 31+11.84
Beg Conc Med ISLAND
Beg CURB CITY (TYPE III-6)

10.75′ Lt "M1" 29+49.99
FL 38.94

10.72′ Lt "M1" 29+94.09
Beg Conc Med ISLAND
Beg CITY CURB (TYPE III-6)

4.96′ Lt "M1" 31+15.02 BC
FL 37.50

10.62′ Lt "M1" 29+0.00
FG 39.26

1.38′ Rt "M1" 31+14.41 EC
FL 37.59 FL 37.31

FL 37.11
FL 37.20

10.72′ Lt "M1" 29+91.30 EC
FL 38.61, CONFORM

10.54′ Lt "M1" 28+83.92
S/C ANGLE POINT, FG 39.30

"M1" LINE

RAMP PER CITY STD 13C-2
SEE CURB RAMPS Const Det

R=3.20′

FL 37.40

40.07′ Rt "M1" 31+70.05
Beg CURB (TYPE A2-6 Mod)
END CURB (TYPE A1-6)

RAMP PER CITY STD 13C-2
SEE CURB RAMPS Const Det

43.16′ Rt "M1" 31+63.11
Beg Conc Med ISLAND

RAMP CASE C
SEE CURB RAMPS Const Det

68.85′ Rt "M1" 30+09.68
Adj WV TO FG

FL 36.46

59.82′ Rt "M1" 28+83.93
S/C ANGLE POINT, FG 37.42

72.29′ Rt "M1" 29+94.07 BC

87.37′ Rt "M1" 30+11.94 EC

R=3.00′

76.18′ Rt "M1" 29+84.60 PCC

64.09′ Rt "M1" 29+82.23
Adj WV TO FG

59.57′ Rt "M1" 30+19.44
S/C ANGLE POINT, FG 37.52

62.82′ Rt "M1" 28+83.75
Beg CITY CURB (TYPE II-24")
FL 37.28 (±) CONFORM
TOC 37.78 (±) CONFORM

46.07′ Rt "M1" 31+70.62
Beg CURB (TYPE A1-6)

77.45′ Rt "M1" 29+82.56, BC

RAMP CASE G
SEE CURB RAMPS
Const Det

SCI-100GM CRASH CUSHION
SEE CURB RAMPS Const Det

68.72′ Rt "M1" 28+83.13
BOW CONFORM

46.00′ Rt "M1"31+75.61
Beg CURB (TYPE A1-6)

FL 37.24

46.00′ Rt "M1"31+75.61
Beg CURB (TYPE A1-6)

66.93′ Rt "M1" 29+32.75
FL 37.10

RAMP CASE C
SEE CURB RAMPS Const Det

67.27′ Rt "M1" 29+36.74 PCC
FL 36.98

79.15′ Rt "M1" 29+91.82 PCC

76.10′ Rt "M1" 31+64.04 EC

83.01′ Rt "M1" 30+92.48
FL 36.07

70.47′ Rt "M1" 31+36.24 EC

65.70′ Rt "M1" 32+40.57 BC
FL 35.35

87.92′ Rt "M1" 30+04.19 PCC

81.40′ Rt "M1" 31+21.66 BC
BOW 36.61

74.04′ Rt "M1" 31+07.43 BC

74.82′ Rt "M1" 29+36.05
Elev 37.54

85.46′ Rt "M1" 31+01.37 EC
BOW 36.21

94.46′ Rt "M1" 30+06.19 EC

103.69′ Rt "M1" 30+19.47
S/C ANGLE POINT, FG 36.63

83.97′ Rt "M1" 30+93.90 BC

104.83′ Rt "M1" 30+16.63
END CITY CURB (TYPE II-24")
CONFORM TO Exist C&G

108.68′ Rt "M1" 30+95.38 BC
FL 36.07
Beg CURB (TYPE A2-6)
CONFORM TO Exist C&G

CITY R/W
R/W
W AHWANEE Ave
MATCH LINE C-14

CONSTRUCTION DETAILS

SCALE: 1" = 20′

C-13

LAST REVISION	DATE PLOTTED => 12/3/2018
01-15-18	TIME PLOTTED => 12:20:50 PM

	DAG	SCV	REVISED BY	DATE REVISED
	09/20/18	01/15/18		

CALCULATED-DESIGNED BY: SHAWN VOGTMAN
CHECKED BY: STEVE LOUPE
SUPERVISOR: TIMOTHY J. LEE
CONSULTANT FUNCTIONAL SUPERVISOR

STATE OF CALIFORNIA - DEPARTMENT OF TRANSPORTATION
Caltrans

x:\237_101_Mathilda\000_CAD\Sheets\000_Submittals\Conformed Plans\0413000204ga013.dgn

BORDER LAST REVISED 7/2/2010 | USERNAME => eilif | DGN FILE => 0413000204ga013.dgn | RELATIVE BORDER SCALE IS IN INCHES 0 1 2 3 | UNIT 0000 | PROJECT NUMBER & PHASE 0413000204

NOTE: FOR ACCURATE RIGHT OF WAY DATA, CONTACT
RIGHT OF WAY ENGINEERING AT THE DISTRICT OFFICE.

CURVE DATA

No. Ⓡ	R	Δ	T	L
9	1500.0′	18°34′59"	112.56′	224.70′
16	70.00′	15°16′48"	9.39′	18.67′
17	70.00′	15°16′48"	9.39′	18.67′

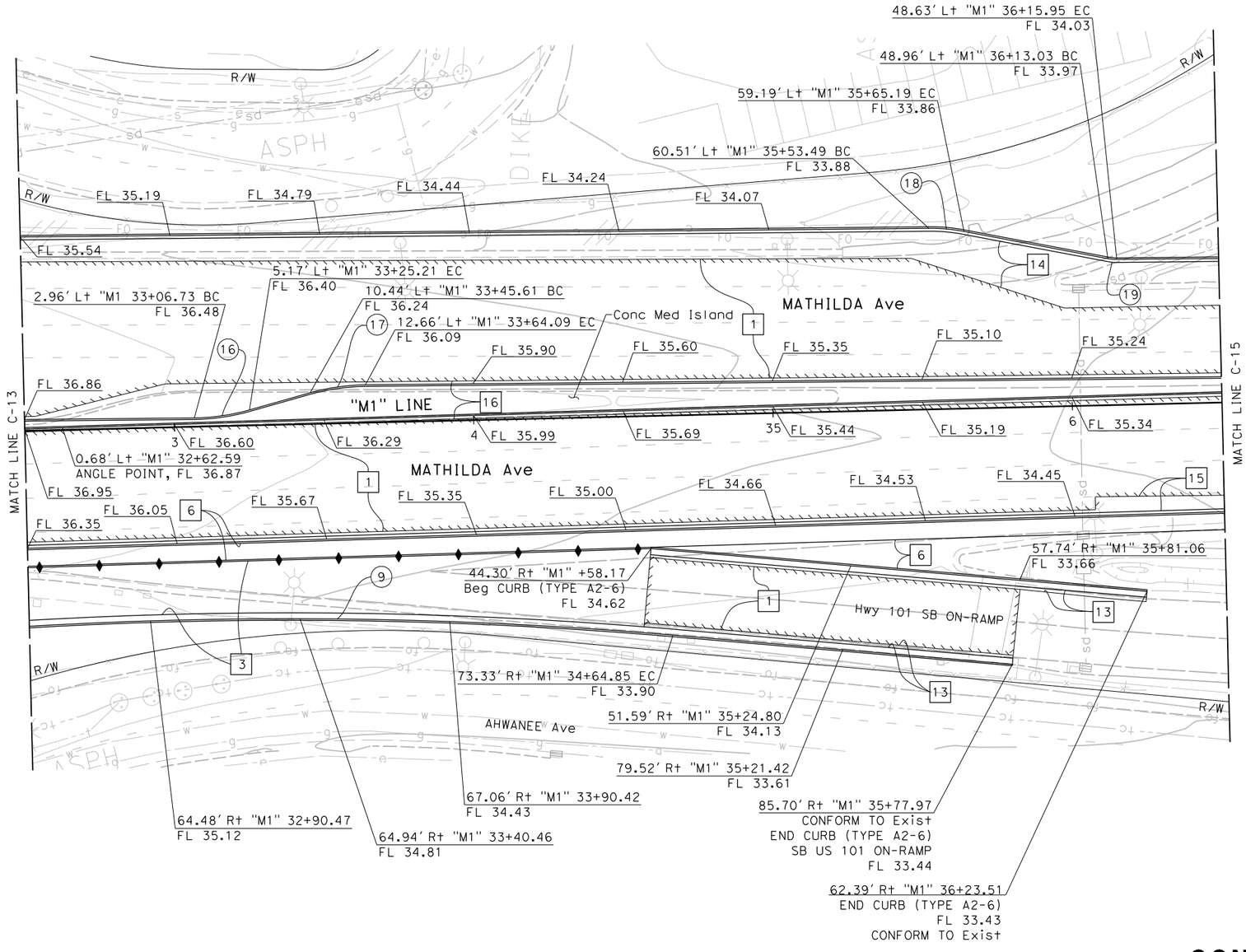

FOR NOTES AND ABBREVIATIONS AND LEGEND, SEE SHEET C-13 AND L-1

CONSTRUCTION DETAILS

SCALE: 1" = 20′

C-14

Dist	COUNTY	ROUTE	POST MILES TOTAL PROJECT	SHEET No.	TOTAL SHEETS
04	SCL	101,237	45.2/45.8, 2.7/3.3	44	736

6-13-18
REGISTERED CIVIL ENGINEER DATE

6-20-18
PLANS APPROVAL DATE

REGISTERED PROFESSIONAL ENGINEER
STEVE LOUPE
No. 63575
Exp. 9/30/18
CIVIL
STATE OF CALIFORNIA

THE STATE OF CALIFORNIA OR ITS OFFICERS OR AGENTS SHALL NOT BE RESPONSIBLE FOR THE ACCURACY OR COMPLETENESS OF SCANNED COPIES OF THIS PLAN SHEET.

WMH CORPORATION
50 W San Fernando St
Suite 950
San Jose, CA 95113

VTA
3331 N First St
Building B
San Jose, Ca 95134

CALCULATED-DESIGNED BY	SHAWN VOGTMAN	REVISED BY	SCV
CHECKED BY	STEVE LOUPE	DATE REVISED	01/15/18
SUPERVISOR	TIMOTHY J. LEE		09/20/18

STATE OF CALIFORNIA - DEPARTMENT OF TRANSPORTATION
CONSULTANT FUNCTIONAL SUPERVISOR

X:\237_101_Mathilda\000_CAD\Sheets\GA-Const_Details\0413000204ga014.dgn

LAST REVISION 01-15-18
DATE PLOTTED => 9/20/2018
TIME PLOTTED => 5:20:14 PM

BORDER LAST REVISED 7/2/2010 | USERNAME => Dianneg | DGN FILE => 0413000204ga014.dgn | RELATIVE BORDER SCALE IS IN INCHES 0 1 2 3 | UNIT 0000 | PROJECT NUMBER & PHASE 0413000204

NOTE: FOR ACCURATE RIGHT OF WAY DATA, CONTACT RIGHT OF WAY ENGINEERING AT THE DISTRICT OFFICE.

Dist	COUNTY	ROUTE	POST MILES TOTAL PROJECT	SHEET No.	TOTAL SHEETS
04	SCL	101,237	45.2/45.8, 2.7/3.3	45	736

REGISTERED CIVIL ENGINEER 6-13-18 DATE

6-20-18
PLANS APPROVAL DATE

REGISTERED PROFESSIONAL ENGINEER STEVE LOUPE No. 63575 Exp. 9/30/20 CIVIL STATE OF CALIFORNIA

THE STATE OF CALIFORNIA OR ITS OFFICERS OR AGENTS SHALL NOT BE RESPONSIBLE FOR THE ACCURACY OR COMPLETENESS OF SCANNED COPIES OF THIS PLAN SHEET.

WMH CORPORATION
50 W San Fernando St
Suite 950
San Jose, CA 95113

VTA
3331 N First St
Building B
San Jose, Ca 95134

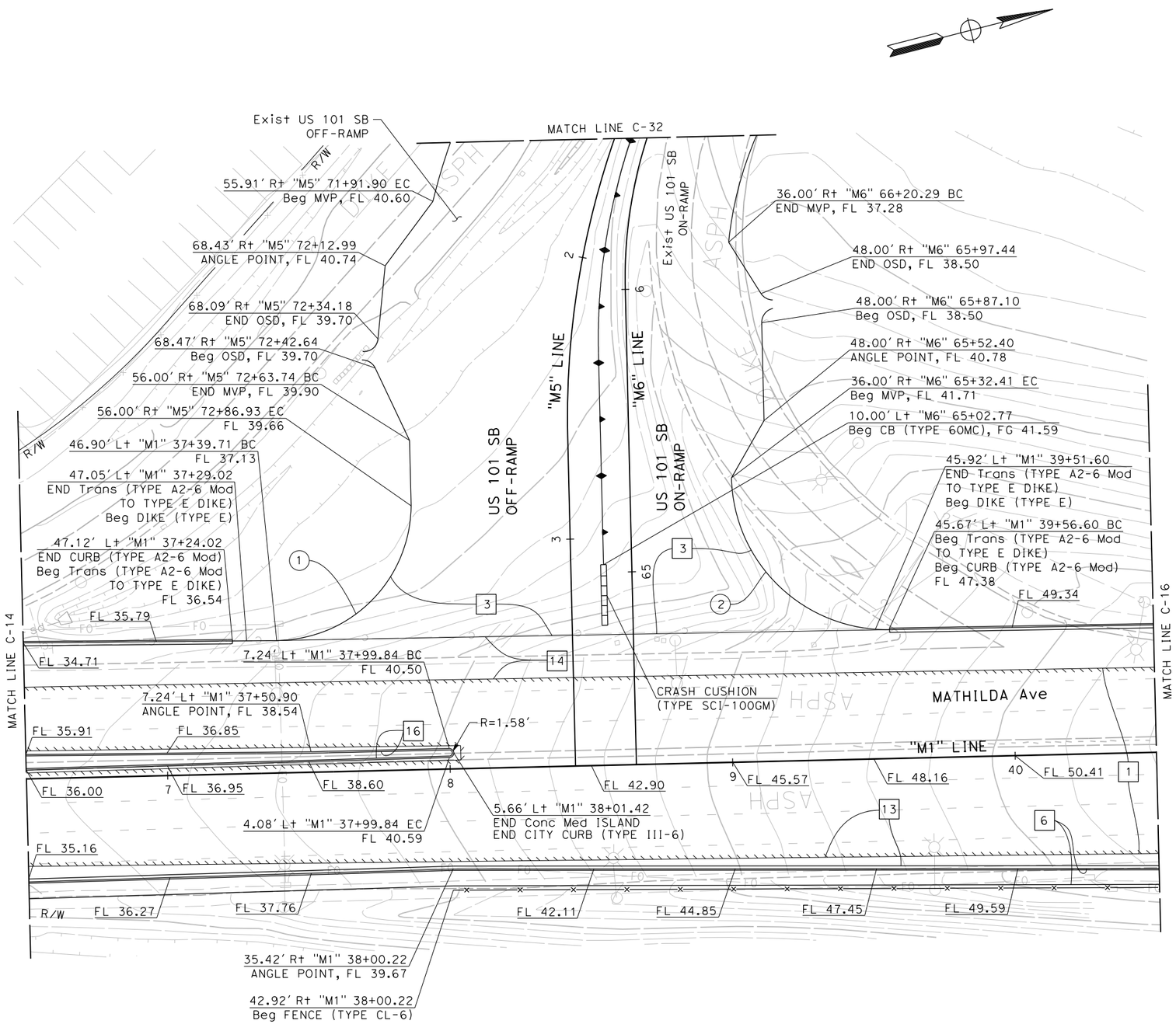

CURVE DATA

No.	R	Δ	T	L
1	48.00'	89°02'11"	47.20'	74.59'
2	55.00'	63°32'10"	33.92'	86.06

CONSTRUCTION DETAILS

SCALE: 1" = 20'

C-15

FOR NOTES AND ABBREVIATIONS AND LEGEND, SEE SHEET C-13 AND L-1

STATE OF CALIFORNIA - DEPARTMENT OF TRANSPORTATION
Caltrans

CONSULTANT FUNCTIONAL SUPERVISOR: TIMOTHY J. LEE
CALCULATED-DESIGNED BY: SHAWN VOGTMAN
CHECKED BY: STEVE LOUPE
REVISED BY: SCV
DATE REVISED: 01/15/18
DAG: 09/20/18

X:\237_101_Mathilda\000_CAD\Sheets\000_Submittals\Conformed Plans\0413000204ga015.dgn

LAST REVISION 01-15-18
DATE PLOTTED => 12/3/2018
TIME PLOTTED => 12:20:51 PM

NOTE: FOR ACCURATE RIGHT OF WAY DATA, CONTACT
RIGHT OF WAY ENGINEERING AT THE DISTRICT OFFICE.

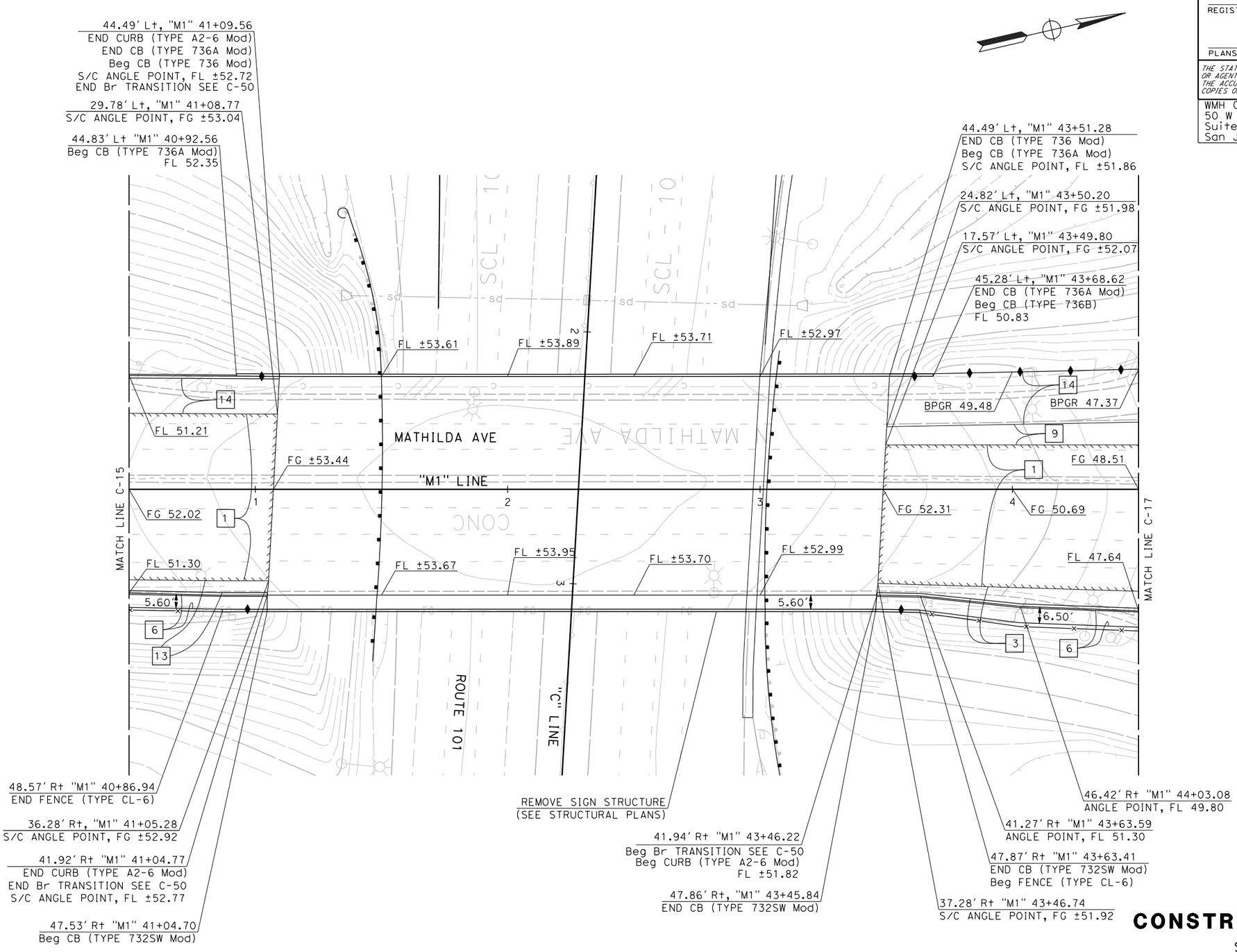

FOR NOTES AND ABBREVIATIONS AND LEGEND, SEE SHEET C-13 AND L-1

CONSTRUCTION DETAILS

SCALE: 1" = 20′

C-16

Dist	COUNTY	ROUTE	POST MILES TOTAL PROJECT	SHEET No.	TOTAL SHEETS
04	SCL	101,237	45.2/45.8, 2.7/3.3	46	736

6-13-18
REGISTERED CIVIL ENGINEER DATE

STEVE LOUPE No. 63575 Exp. 9/30/20 CIVIL — REGISTERED PROFESSIONAL ENGINEER — STATE OF CALIFORNIA

6-20-18
PLANS APPROVAL DATE

THE STATE OF CALIFORNIA OR ITS OFFICERS OR AGENTS SHALL NOT BE RESPONSIBLE FOR THE ACCURACY OR COMPLETENESS OF SCANNED COPIES OF THIS PLAN SHEET.

WMH CORPORATION
50 W San Fernando St
Suite 950
San Jose, CA 95113

VTA
3331 N First St
Building B
San Jose, Ca 95134

	CALCULATED-DESIGNED BY	CHECKED BY	REVISED BY	DATE REVISED
	SHAWN VOGTMAN	STEVE LOUPE	SCV	01/15/18
			DAG	09/20/18

STATE OF CALIFORNIA - DEPARTMENT OF TRANSPORTATION
CONSULTANT FUNCTIONAL SUPERVISOR: TIMOTHY J. LEE

LAST REVISION 01-15-18 | DATE PLOTTED => 12/3/2018 | TIME PLOTTED => 12:20:52 PM

X:\237_101_Mathilda\000_CAD\Sheets\000_Submittals\Conformed Plans\0413000204ga016.dgn

BORDER LAST REVISED 7/2/2010 | USERNAME => eilif | DGN FILE => 0413000204ga016.dgn | RELATIVE BORDER SCALE IS IN INCHES 0 1 2 3 | UNIT 0000 | PROJECT NUMBER & PHASE 0413000204

NOTE: FOR ACCURATE RIGHT OF WAY DATA, CONTACT
RIGHT OF WAY ENGINEERING AT THE DISTRICT OFFICE.

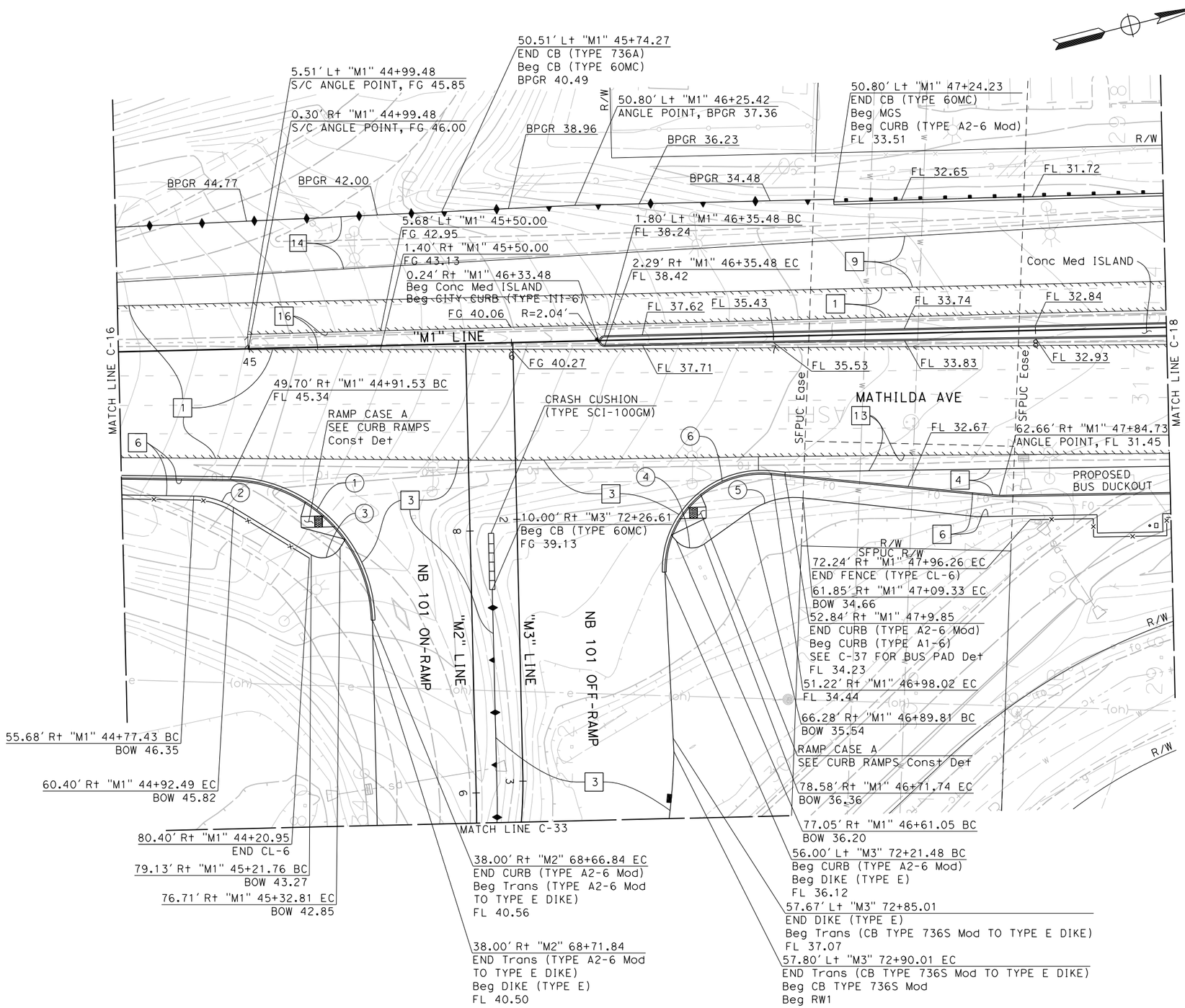

FOR NOTES AND ABBREVIATIONS AND LEGEND, SEE SHEET C-13 AND L-1

Dist	COUNTY	ROUTE	POST MILES TOTAL PROJECT	SHEET No.	TOTAL SHEETS
04	SCL	101,237	45.2/45.8, 2.7/3.3	47	736

REGISTERED CIVIL ENGINEER — 6-13-18 DATE

PLANS APPROVAL DATE — 6-20-18

REGISTERED PROFESSIONAL ENGINEER — STEVE LOUPE — No. 63575 — Exp. 9/30/20 — CIVIL — STATE OF CALIFORNIA

THE STATE OF CALIFORNIA OR ITS OFFICERS OR AGENTS SHALL NOT BE RESPONSIBLE FOR THE ACCURACY OR COMPLETENESS OF SCANNED COPIES OF THIS PLAN SHEET.

WMH CORPORATION
50 W San Fernando St
Suite 950
San Jose, CA 95113

VTA
3331 N First St
Building B
San Jose, Ca 95134

CURVE DATA

No. Ⓡ	R	Δ	T	L
1	55.00'	87°51'54"	52.99'	84.34'
2	30.00'	30°29'40"	8.18'	15.97'
3	8.00'	90°0'0"	8.00'	12.57'
4	8.00'	84°46'32"	7.30'	11.84'
5	30.00'	39°16'27"	10.70'	20.56'
6	37.00'	95°03'0"	40.41'	61.38'

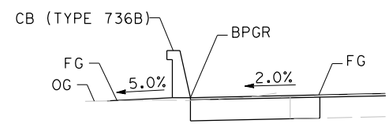

ELEVATION AT BARRIER (TYPE 736B)
NO SCALE

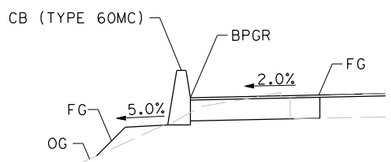

ELEVATION AT BARRIER (TYPE 60MC)
NO SCALE

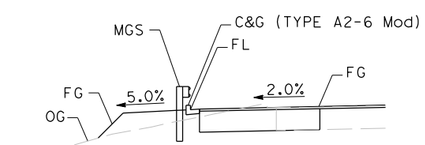

ELEVATION AT MGS/C&G (TYPE A2-6 Mod)
NO SCALE

CONSTRUCTION DETAILS

SCALE: 1" = 20'

C-17

CALCULATED-DESIGNED BY	DAG	09/20/18	
CHECKED BY	SCV	01/15/18	
STEVE LOUPE	REVISED BY	DATE REVISED	
SCOTT DWYER			
CONSULTANT FUNCTIONAL SUPERVISOR: TIMOTHY J. LEE			
STATE OF CALIFORNIA - DEPARTMENT OF TRANSPORTATION			

LAST REVISION 01-15-18 | DATE PLOTTED => 12/3/2018 | TIME PLOTTED => 12:20:54 PM

X:\237_101_Mathilda\000_CAD\Sheets\000_Submittals\Conformed Plans\0413000204ga017.dgn

BORDER LAST REVISED 7/2/2010 | USERNAME => eilif | DGN FILE => 0413000204ga017.dgn | RELATIVE BORDER SCALE IS IN INCHES 0 1 2 3 | UNIT 0000 | PROJECT NUMBER & PHASE 0413000204

NOTE: FOR ACCURATE RIGHT OF WAY DATA, CONTACT
RIGHT OF WAY ENGINEERING AT THE DISTRICT OFFICE.

CURVE DATA

No. Ⓡ	R	Δ	T	L
1	60.00′	14°02′10″	7.39′	14.70′
2	60.00′	14°02′10″	7.39′	14.70′
3	60.00′	14°30′44″	7.63′	15.20′
4	60.00′	14°59′35″	7.89′	15.70′

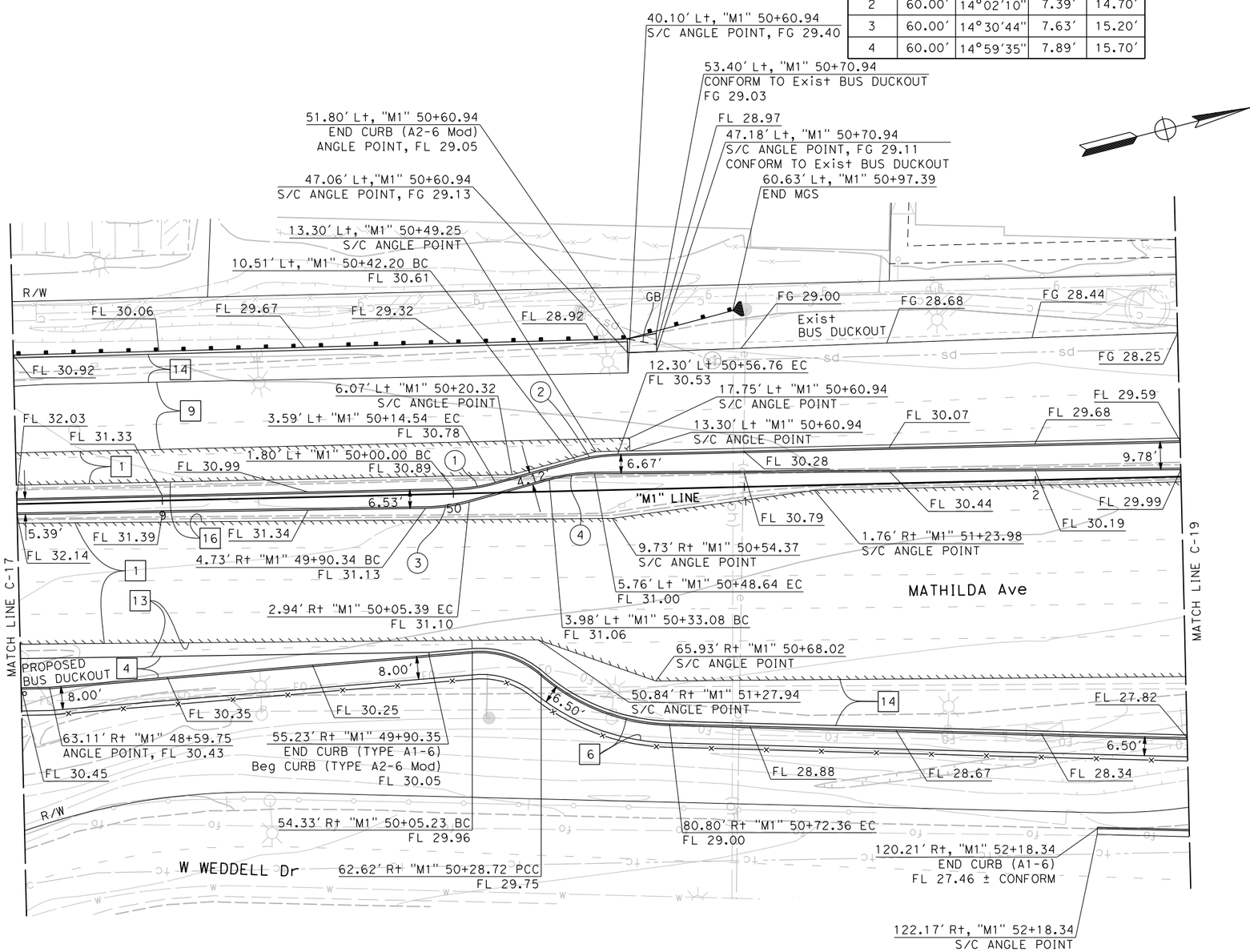

FOR NOTES AND ABBREVIATIONS AND LEGEND, SEE SHEET C-13 AND L-1

CONSTRUCTION DETAILS

SCALE: 1" = 20′

C-18

Dist	COUNTY	ROUTE	POST MILES TOTAL PROJECT	SHEET No.	TOTAL SHEETS
04	SCL	101,237	45.2/45.8, 2.7/3.3	48	736

6-13-18
REGISTERED CIVIL ENGINEER DATE

6-20-18
PLANS APPROVAL DATE

REGISTERED PROFESSIONAL ENGINEER — STEVE LOUPE — No. 63575 — Exp. 9/30/18 — CIVIL — STATE OF CALIFORNIA

THE STATE OF CALIFORNIA OR ITS OFFICERS OR AGENTS SHALL NOT BE RESPONSIBLE FOR THE ACCURACY OR COMPLETENESS OF SCANNED COPIES OF THIS PLAN SHEET.

WMH CORPORATION
50 W San Fernando St
Suite 950
San Jose, CA 95113

VTA
3331 N First St
Building B
San Jose, Ca 95134

DAG	09/20/18		
SCV	01/15/18		
REVISED BY	DATE REVISED		
SCOTT DWYER	STEVE LOUPE		
CALCULATED-DESIGNED BY	CHECKED BY		
CONSULTANT FUNCTIONAL SUPERVISOR		TIMOTHY J. LEE	
STATE OF CALIFORNIA - DEPARTMENT OF TRANSPORTATION		Caltrans	

LAST REVISION 01-15-18 | DATE PLOTTED => 9/20/2018 | TIME PLOTTED => 7:30:44 PM

X:\237_101_Mathilda\000_CAD\Sheets\VGA-Const Details\0413000204ga018.dgn

BORDER LAST REVISED 7/2/2010 | USERNAME => Dianneg | DGN FILE => 0413000204ga018.dgn | RELATIVE BORDER SCALE IS IN INCHES 0 1 2 3 | UNIT 0000 | PROJECT NUMBER & PHASE 0413000204

NOTE: FOR ACCURATE RIGHT OF WAY DATA, CONTACT
RIGHT OF WAY ENGINEERING AT THE DISTRICT OFFICE.

CURVE DATA

No.	R	Δ	T	L
1	15.00′	89°51′38"	14.96′	23.53′
2	15.93′	179°51′38"	13090.8′	50.02′
3	8.00′	90°2′22"	8.01′	12.57′
4	15.75′	178°18′38"	1068.21′	49.02′
5	33.02′	61°33′25"	19.65′	35.48′
6	22.00′	18°57′59"	3.67′	7.28′
7	207.00′	60°35′3"	120.92′	218.88′
8	10.00′	90°47′40"	10.14′	15.60′
9	97.00′	27°46′2"	23.98′	47.01′

Dist	COUNTY	ROUTE	POST MILES TOTAL PROJECT	SHEET No.	TOTAL SHEETS
04	SCL	101,237	45.2/45.8, 2.7/3.3	49	736

6-13-18
REGISTERED CIVIL ENGINEER DATE

REGISTERED PROFESSIONAL ENGINEER
STEVE LOUPE
No. 63575
Exp. 9/30/20
CIVIL
STATE OF CALIFORNIA

6-20-18
PLANS APPROVAL DATE

THE STATE OF CALIFORNIA OR ITS OFFICERS OR AGENTS SHALL NOT BE RESPONSIBLE FOR THE ACCURACY OR COMPLETENESS OF SCANNED COPIES OF THIS PLAN SHEET.

WMH CORPORATION
50 W San Fernando St
Suite 950
San Jose, CA 95113

VTA
3331 N First St
Building B
San Jose, Ca 95134

1.72′ Lt "D4R" 106+07.20 BC
FL 26.40
Beg CURB (TYPE A2-6)
CONFORM

ROUTE 237 EB OFF-RAMP

9.53′ Rt "D4R" 106+52.36 EC
FL 26.26

24.81′ Rt "D4R" 106+81.79 BC
FL 26.17

20.55′ Rt "D4R" 106+95.27 EC
FL 25.96

54.65′ Lt "M1" 56+95.79
END CURB (TYPE A2-6)
CONFORM TO Exist C&G
FL 25.16

"D4R" LINE

71.85′ Lt "M1" 53+98.93 BC
FL 26.60± CONFORM
Beg CURB (TYPE A2-6)
CONFORM TO Exist C&G

56.09′ Lt "M1" 55+57.94 EC
FL 26.19
END CURB (TYPE A2-6)
CONFORM

RAMP CASE G, SEE CURB
RAMPS Const Det

55.01′ Lt "M1" 55+51.44 BC
FL 26.25

55.01′ Lt "M1" 54+28.22 EC
FL 27.16

ROSS DRIVE

CITY R/W
R/W

FL 27.00
FL 26.75

12.30′ Lt "M1" 52+83.13
FL 29.33

1.51′ Lt "M1" 53+91.79
Beg Conc Med ISLAND
Beg CITY CURB (TYPE III-6)

12.30′ Lt "M1"52+93.13 BC
FL 29.30
R=5.37′

6.81′ Lt "M1"52+98.38
END Conc Med ISLAND
END CITY CURB
(TYPE III-6)

3.01′ Lt "M1" 53+93.29 BC
FL 28.98

0.01′ Lt "M1" 53+93.29 EC
FL 28.99

FL 28.65
FL 28.40

3.01′ Lt "M1" 56+04.35 BC
FL 27.68

3.52′ Rt "M1" 56+04.29 EC
FL 28.06
FL 27.80

0.29′ Rt "M1" 56+07.58
END Conc Med ISLAND
END CITY CURB (TYPE III-6)

R=3.26′

R=1.50′

"M1" LINE

MATCH LINE C-18

MATCH LINE C-20

FL 28.88
FL 28.47
FL 28.21

1.56′ Lt "M1"52+92.90 EC
FL 29.65

1.85′ Lt "M1" 52+82.90
FL 29.80

63.65′ Rt "M1" 54+32.07 BC
Beg CURB (TYPE A2-6 Mod)
FL 27.26
END CURB (TYPE A1-6)

70.65′ Rt "M1" 54+31.95 EC
FL 27.11
RAMP CASE C
SEE CURB RAMPS Const Det

67.64′ Rt "M1" 56+70.74 BC
END CURB (TYPE A2-6 Mod)
FL 25.93

R=5.00′

29.14′ Lt "D5a" 08+26.25 EC
FL 25.87

23.03′ Lt "D5a" 08+33.39 EC
FL 25.72

MATHILDA Ave

97.16′ Rt "M1" 52+68.33 BC

RAMP CASE A, SEE CURB
RAMPS Const Det

67.09′ Rt "M1" 54+28.51
Beg Conc Med ISLAND

5.00′ Lt "D5a" 06+10.10
Beg CRASH CUSHION (TYPE SCI-100GM)
END CURB (TYPE A1-6)

71.80′ Rt "M1" 54+71.27
Beg CB (TYPE 736B Mod)
End CRASH CUSHION (TYPE SCI-100GM)

RAMP CASE A, SEE CURB
RAMPS Const Det

R=3.50′

R=10.00′

R=2.00′

RAMP CASE A
SEE CURB RAMPS Const Det

83.44′ Rt "M1" 57+30.13
Beg CURB (TYPE A2-6 Mod)
Beg Trans TO CURB
(TYPE B4)

39.01′ Lt "D5a" 08+80.21
Beg MVP
Beg CURB (TYPE B4)
FL 25.52
End Trans TO CURB
(TYPE B4)

70.75′ Rt "M1" 54+37.80
Beg CURB (TYPE A1-6)

22.00′ Rt "D5a" 06+13.03
END CURB (TYPE A2-6 Mod)
FL 26.43

68.81′ Rt "M1" 56+28.50
Adj WV TO FG

2.00′ Rt "D5a" 8+00.91
Adj WV TO FG

ROUTE 237 EB ON-RAMP

34.00′ Rt "D5a" 06+13.00

96.10′ Rt "M1" 53+98.80 EC
FL 26.50

30.00′ Rt "D5a" 07+37.99
FL 25.07

72.61′ Rt "M1" 56+57.89
Adj GAS VALVE TO FG

"D5a" LINE

CITY R/W

RAMP PER CITY
Std 13C-1,SEE CURB
RAMPS Const Det

WEDDELL
DRIVE

109.10′ Rt "M1" 53+98.67

128.58′ Rt "M1" 53+97.74 BC
FL 26.09

58.66′ Rt "D5" 06+38.34
Beg CURB (TYPE A2-6 Mod)
CONFORM TO Exist CURB
FL 25.78

5.00′ Lt "D5a" 08+27.85
END CB (TYPE 736B Mod)
FL 25.71

41.65′ Lt "D5a" 08+96.51
ANGLE POINT, FG 26.25

MATCH LINE C-30

98.66′ Rt "M1" 52+68.25 EC
END FENCE (TYPE CL-6)

112.86′ Rt "M1" 52+82.56 EC

123.25′ Rt "M1" 52+82.06 EC
END CURB (TYPE A2-6 Mod)
Beg CURB (TYPE A1-6)
FL 26.81

168.92′ Rt "M1" 53+51.72
Beg CITY CURB (TYPE II-24")
CONFORM TO Exist C&G
FL 25.68

169.18′ Rt "M1" 53+57.21
CONFORM TO Exist SW

RAMP PER CITY Std 13C-2,
SEE CURB RAMPS Const Det

164.31′ Rt "M1" 53+59.95
ANGLE POINT

165.41′ Rt "M1" 54+97.81
END CITY CURB (TYPE II-24")
CONFORM TO Exist Pvmt
FL 24.75

FOR NOTES AND ABBREVIATIONS
AND LEGEND, SEE SHEET C-13 AND L-1

CONSTRUCTION DETAILS

SCALE: 1" = 20′

C-19

LAST REVISION 01-15-18
DATE PLOTTED => 12/3/2018
TIME PLOTTED => 12:20:55 PM

CALCULATED-DESIGNED BY	CHECKED BY	REVISED BY	DATE REVISED
SHAWN VOGTMAN	STEVE LOUPE	SCV	01/15/18
		SMD	09/21/18

CONSULTANT FUNCTIONAL SUPERVISOR: TIMOTHY J. LEE

STATE OF CALIFORNIA - DEPARTMENT OF TRANSPORTATION
Caltrans

X:\237_101_Mathilda\000_CAD\Sheets\000_Submittals\Conformed Plans\0413000204ga019.dgn

BORDER LAST REVISED 7/2/2010 | USERNAME => eilif | DGN FILE => 0413000204ga019.dgn | RELATIVE BORDER SCALE IS IN INCHES 0 1 2 3 | UNIT 0000 | PROJECT NUMBER & PHASE 0413000204

NOTE: FOR ACCURATE RIGHT OF WAY DATA, CONTACT RIGHT OF WAY ENGINEERING AT THE DISTRICT OFFICE.

CURVE DATA

No.	R	Δ	T	L
1	29.00′	175°58′27"	825.12′	89.07′
2	400.00′	21°10′12"	74.75′	147.80′
3	398.00′	21°10′12"	147.06′	147.06′
4	44.60′	29°01′06"	11.54′	22.59′
5	46.60′	26°06′51"	10.81′	21.24′
6	250.00′	5°07′41"	11.20′	22.38′
7	108.67′	14°36′31"	13.93′	27.71′
11	50.00′	90°5′55"	50.09′	78.63′
12	64.00′	43°05′52"	25.27′	48.14′
13	50.00′	67°47′36"	33.59′	59.16′

25.00′ Lt "L6" 158+54.6
℄ PCC Dwy, LATCH POST
SEE C-55

25.00′ Lt "L6" 158+79.9
Beg Conc Med

34.36′ Lt "L6" 159+46.89
Adj VAULT TO FG

28.77′ Lt "L6" 159+56.17
Adj Elec. VAULT TO
FG BY OTHERS (PG&E)

148.84′ Lt "M1" 59+50.15
FL 24.23
CONFORM
END CURB (TYPE A2-6 Mod)

MATCH LINE C-25

35.71′ Lt "L6" 159+13.16
FL 24.24

123.57′ Lt "M1" 59+72.88
Beg CURB (TYPE D-4)
Beg CURB (TYPE A2-6 Mod)
END CURB (TYPE B-4)
FL 23.90

111.86′ Lt "M1" 59+01.61
END CURB (TYPE A2-6 Mod)
EP 22.30
CONFORM

83.31′ Lt "M1" 59+31.18 BC
Beg CURB (TYPE A2-6 Mod)
Beg CURB (TYPE B-4)
END CURB TYPE D-4
FL 23.09

35.70′ Rt "D2" 107+67.90
END CURB (TYPE A2-6)
EP 22.56
CONFORM

35.42′ Lt "L6" +68.24 BC
FL 23.79

43.76′ Lt "L6" +88.05 EC
FL 23.63

CURB
(TYPE I-6)

"I6" +50.00
FG 24.49

MOFFETT PARK Dr

"L6" LINE

PROPOSED R/W 160

EXIST R/W

VTA LRT

0.4%

1.07%

1.02%

17.00′ Lt "L6" 158+70.9 S/C (25.39)
23.00′ Lt "L6" 158+70.9 LIP 25.27
24.00′ Lt "L6" 158+70.9 FL 25.19 (TOC 25.69)
END CURB (TYPE A2-6 Mod)
38.59′ Lt "L6" 158+70.90 EP 25.37
END Dwy (TYPE 6C-3 Mod) SEE C-55
BEGIN PCC RAMP
25.00′ Lt "L6" 158+70.95 Beg FENCE
(TYPE CL-5)

17.00′ Lt "L6" 158+80.9 S/C (25.31)
23.00′ Lt "L6" 158+80.9 LIP 25.19
24.00′ Lt "L6" 158+80.9 FL 25.11, TOC 25.61
38.76′ Lt "L6" 158+80.90 EP 25.82 (TOC 26.50)
END PCC RAMP

17.00′ Lt "L6" 159+00.0 S/C (25.19)
23.00′ Lt "L6" 159+00.0 LIP 25.14
24.00′ Lt "L6" 159+00.0 FL 25.06, TOC 25.56
38.85′ Lt "L6" 159+00.0 EP 25.85 (TOC 26.33)

17.00′ Lt "L6" 159+75.5 S/C (24.43)
23.00′ Lt "L6" 159+75.5 LIP 24.33
24.00′ Lt "L6" 159+75.5 FL 24.25, TOC 24.75
38.85′ Lt "L6" 159+75.5 EP 24.96

HMA MULTI-USE PATH

30.87′ Lt "L6" +50.00
FL 23.29

30.80′ Lt "L6" 160+81.3 S/C (23.20)
36.60′ Lt "L6" 160+79.7 LIP 23.27
37.56′ Lt "L6" 160+79.4 FL 23.19, TOC 23.69
55.24′ Lt "L6" 160+74.7 EP 23.98

40.30′ Lt "L6" 161+11.9 S/C (23.14)
46.89′ Lt "L6" 161+09.6 LIP 23.17
45.95′ Lt "L6" 161+09.9 FL 23.09, TOC 23.59
66.70′ Lt "L6" 161+02.6 EP 23.91 (TOC 25.40)
Beg RAMP

46.35′ Lt "L6" 161+22.5 S/C (23.22)
50.12′ Lt "L6" 161+21.1 LIP 23.10
51.07′ Lt "L6" 161+20.8 FL 23.02, TOC 23.52
END FENCE (TYPE CL-5)
70.83′ Lt "L6" 161+13.8 EP 23.40 (TOC 25.33)
END RAMP

54.80′ Lt "M1" +88.13 BC
FL 23.12, TOC 23.62

38.11′ Lt "M1" +82.79 EC
FL 22.89

RAISED Med

MATCH LINE C-21

ROUTE 237 WB ON-RAMP

"D2" LINE

28.63′ Rt "D2" 108+11.23 BC
FL 23.60
R=2.00′

40.11′ Rt "D2" 108+09.50
Beg CURB (TYPE A2-6)
FL 23.65
CONFORM

31.39′ Rt "D2" 108+13.59 EC
FL 23.68

83.30′ Lt "M1" 59+71.47
FL 23.68

4.17′ Lt "M1" 58+55.47
FL 24.84
CONFORM TO Exist CURB
Beg CITY CURB
(TYPE III-6)

59.28′ Lt "M1" +56.06 BC
FL 23.22

R=27.8′

R=15.0′

"I6" +50.00
FG 23.48

CURB
(TYPE D-4)

52.89′ Lt "L6" +97.03 BC
FL 23.54

50.77′ Lt "M1" +86.94 EC
FL 23.40

51.48′ Lt "M1" +73.73 BC
FL 23.33

43.96′ Lt "L6" +00.94
FL 23.14 HIGH POINT

3.37′ Lt "L6" +67.97
FG 23.78

R=1.00′

RAISED Med
38.11′ Lt "M1" +85.11
FL 22.88

38.11′ Lt "M1" +03.17
CITY CURB
FL 22.61 (TYPE III-6)

BC 0.11′ Lt "M1" +86.13
FG 23.27, R=12.3′

R=2.00′

12.15′ Rt "M1" 61+73.87
Beg CITY CURB (TYPE III-6)

EC 0.11′ Lt "M1" 62+03.13
FL 23.26
BC 1.89′ Rt "M1" 62+01.13
FL 23.27, R=2.0′
EC 22.41′ Rt "M1" 62+01.13
FL 23.09

BC 24.41′′ Rt "M1" 62+03.13
FL 23.01, R=2.0′

EC 63.36′ Rt "M1" 62+09.18
FL 21.86′

63.36′ Rt "M1" 62+13.28, FL 21.81
BC 63.36′ Rt "M1" 62+13.28, R=2.2′
R=10.00′
63.42′ Rt "M1" 62+43.37
FL 21.59, END CURB (TYPE A2-6)
CONFORM

69.06′ Rt "M1" 62+43.38
CONFORM

69.07′ Rt "M1" 62+35.71 EC
69.60′ Rt "M1" 62+32.50 BC
EC 67.73′ Rt "M1" 62.13.59
73.36′ Rt "M1" 62+17.52
73.87′ Rt "M1" 62+16.40
FG 22.47
BC 78.69′ Rt "M1" 62+05.89
FL 22.24, R=50.0′
PCC 41.15′ Lt "D3" 09+93.11
EP 22.49, R=64.0′
EC 39.66′ Lt "D3" 10+37.01
FL 21.33, CONFORM

"M1" LINE

MATCH LINE C-19

ROUTE 237 WB

"A3" LINE

ROUTE 237 EB

MATHILDA Ave

0.02′ Lt "M1" 59+60.63 BC
FL 24.65

6.14′ Rt "M1" 58+55.33
FL FL 24.83
CONFORM TO Exist CURB
Beg CITY CURB (TYPE III-6)

2.78′ Rt "M1" 59+63.27
FL 24.50
END Conc Med ISLAND
Beg CITY CURB (TYPE III-6)

R=2.75′

5.48′ Rt "M1" 59+60.52 EC
FL 24.64

SEE C-47 & 48

EC 28.00′ Rt "D3" 09+79.18
FL 22.60

BC 66.42′ Rt "M1" 61+07.03
FL 22.54, R=2.0′

CITY CURB
(TYPE III-6)

"M1"+94.13
SEE C-48
FOR DETAILS

"M1" 61+85.10, (TYPE III-6)
SEE CURB RAMPS
Const Det
RAISED Med

RAISED Med

RAMP CASE A, SEE CURB RAMPS Const Det

"D3" LINE

76.93′ Rt "M1" 59+32.45
Beg FENCE (TYPE CL-6)

Exist WB SR 237
OFF-RAMP

BC 72.43′ Rt "M1" 60+90.59
R=5.5′

PCC 77.92′ Rt "M1" 60+96.09
R=5.5′

EC 83.42′ Rt "M1" 61+01.59

28.00′ Rt "D3" 09+94.19 FL 22.87
END CURB (TYPE A2-6 Mod)

28.00′ Rt "D3" 10+00.00
FL 22.97

28.00′ Rt "D3" 10+50.00
FL 23.87

MATCH LINE C-26

22.00′ Rt "D3" 10+24.12
FL 22.91
Beg CURB (TYPE A2-6)

BC 25.67′ Lt "D3" 10+37.51
FL 21.58

22.00′ Rt "D3" 10+50.00
FL 23.31

FOR NOTES AND ABBREVIATIONS AND LEGEND, SEE SHEET C-13 AND L-1

CONSTRUCTION DETAILS

SCALE: 1" = 20′

C-20

Dist	COUNTY	ROUTE	POST MILES TOTAL PROJECT	SHEET No.	TOTAL SHEETS
04	SCL	101,237	45.2/45.8, 2.7/3.3	50	736

6-13-18
REGISTERED CIVIL ENGINEER DATE

STEVE LOUPE No. 63575 Exp. 9/30/20 CIVIL — REGISTERED PROFESSIONAL ENGINEER — STATE OF CALIFORNIA

6-20-18
PLANS APPROVAL DATE

THE STATE OF CALIFORNIA OR ITS OFFICERS OR AGENTS SHALL NOT BE RESPONSIBLE FOR THE ACCURACY OR COMPLETENESS OF SCANNED COPIES OF THIS PLAN SHEET.

WMH CORPORATION
50 W San Fernando St
Suite 950
San Jose, CA 95113

VTA
3331 N First St
Building B
San Jose, Ca 95134

DATE REVISED	REVISED BY	CALCULATED-DESIGNED BY	CHECKED BY
09/21/18	SMD	SHAWN VOGTMAN	STEVE LOUPE
01/15/18	SCV		

CONSULTANT FUNCTIONAL SUPERVISOR: TIMOTHY J. LEE

STATE OF CALIFORNIA - DEPARTMENT OF TRANSPORTATION

Caltrans

LAST REVISION 01-15-18 | DATE PLOTTED => 12/3/2018 | TIME PLOTTED => 12:20:57 PM

X:\237_101_Mathilda\000_CAD\Sheets\000_Submittals\Conformed Plans\0413000204ga020.dgn

BORDER LAST REVISED 7/2/2010 | USERNAME => eiiif | DGN FILE => 0413000204ga020.dgn | RELATIVE BORDER SCALE IS IN INCHES 0 1 2 3 | UNIT 0000 | PROJECT NUMBER & PHASE 0413000204

NOTE: FOR ACCURATE RIGHT OF WAY DATA, CONTACT
RIGHT OF WAY ENGINEERING AT THE DISTRICT OFFICE.

Dist	COUNTY	ROUTE	POST MILES TOTAL PROJECT	SHEET No.	TOTAL SHEETS
04	SCL	101,237	45.2/45.8, 2.7/3.3	51	736

6-13-18
REGISTERED CIVIL ENGINEER DATE

6-20-18
PLANS APPROVAL DATE

REGISTERED PROFESSIONAL ENGINEER
STEVE LOUPE
No. 63575
Exp. 9/30/18
CIVIL
STATE OF CALIFORNIA

THE STATE OF CALIFORNIA OR ITS OFFICERS OR AGENTS SHALL NOT BE RESPONSIBLE FOR THE ACCURACY OR COMPLETENESS OF SCANNED COPIES OF THIS PLAN SHEET.

WMH CORPORATION
50 W San Fernando St
Suite 950
San Jose, CA 95113

VTA
3331 N First St
Building B
San Jose, Ca 95134

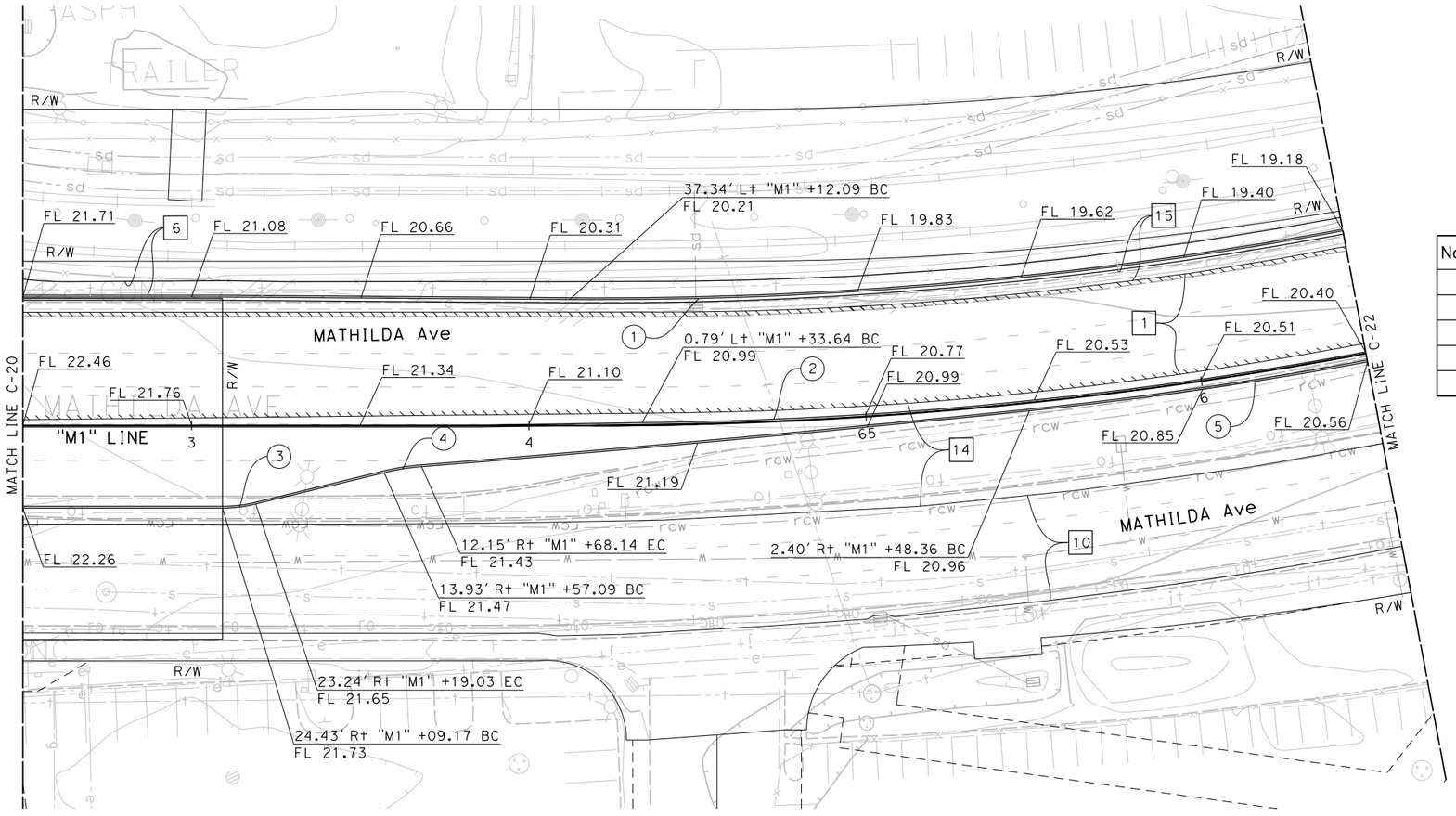

CURVE DATA

No. Ⓟ	R	Δ	T	L
1	1200.00′	27°18′49.20"	291.57′	572.06′
2	1236.50′	27°21′30.84"	300.95′	590.43′
3	41.46′	13°45′17.54"	5.00′	9.95′
4	70.00′	9°10′16.26"	5.61′	11.21′
5	1239.50′	7°22′16.16"	79.84′	159.46′

CONSTRUCTION DETAILS

SCALE: 1" = 20′

C-21

FOR NOTES AND ABBREVIATIONS AND LEGEND, SEE SHEET C-13 AND L-1

CALCULATED-DESIGNED BY	SHAWN VOGTMAN		
CHECKED BY	STEVE LOUPE		
DRAWN BY	DAG	09/21/18	
CONSULTANT FUNCTIONAL SUPERVISOR	SCV	01/15/18	
TIMOTHY J. LEE	REVISED BY	DATE REVISED	

STATE OF CALIFORNIA - DEPARTMENT OF TRANSPORTATION
Caltrans

X:\237_101_Mathilda\000_CAD\Sheets\GA-Const_Details\0413000204ga021.dgn

LAST REVISION 01-15-18
DATE PLOTTED => 9/21/2018
TIME PLOTTED => 11:46:57 AM

BORDER LAST REVISED 7/2/2010 | USERNAME => Dianneg | DGN FILE => 0413000204ga021.dgn | RELATIVE BORDER SCALE IS IN INCHES 0 1 2 3 | UNIT 0000 | PROJECT NUMBER & PHASE 0413000204

NOTE: FOR ACCURATE RIGHT OF WAY DATA, CONTACT
RIGHT OF WAY ENGINEERING AT THE DISTRICT OFFICE.

Dist	COUNTY	ROUTE	POST MILES TOTAL PROJECT	SHEET No.	TOTAL SHEETS
04	SCL	101,237	45.2/45.8, 2.7/3.3	52	736

6-13-18
REGISTERED CIVIL ENGINEER DATE

6-20-18
PLANS APPROVAL DATE

REGISTERED PROFESSIONAL ENGINEER
STEVE LOUPE
No. 63575
Exp. 9/30/18
CIVIL
STATE OF CALIFORNIA

THE STATE OF CALIFORNIA OR ITS OFFICERS OR AGENTS SHALL NOT BE RESPONSIBLE FOR THE ACCURACY OR COMPLETENESS OF SCANNED COPIES OF THIS PLAN SHEET.

WMH CORPORATION
50 W San Fernando St
Suite 950
San Jose, CA 95113

VTA
3331 N First St
Building B
San Jose, Ca 95134

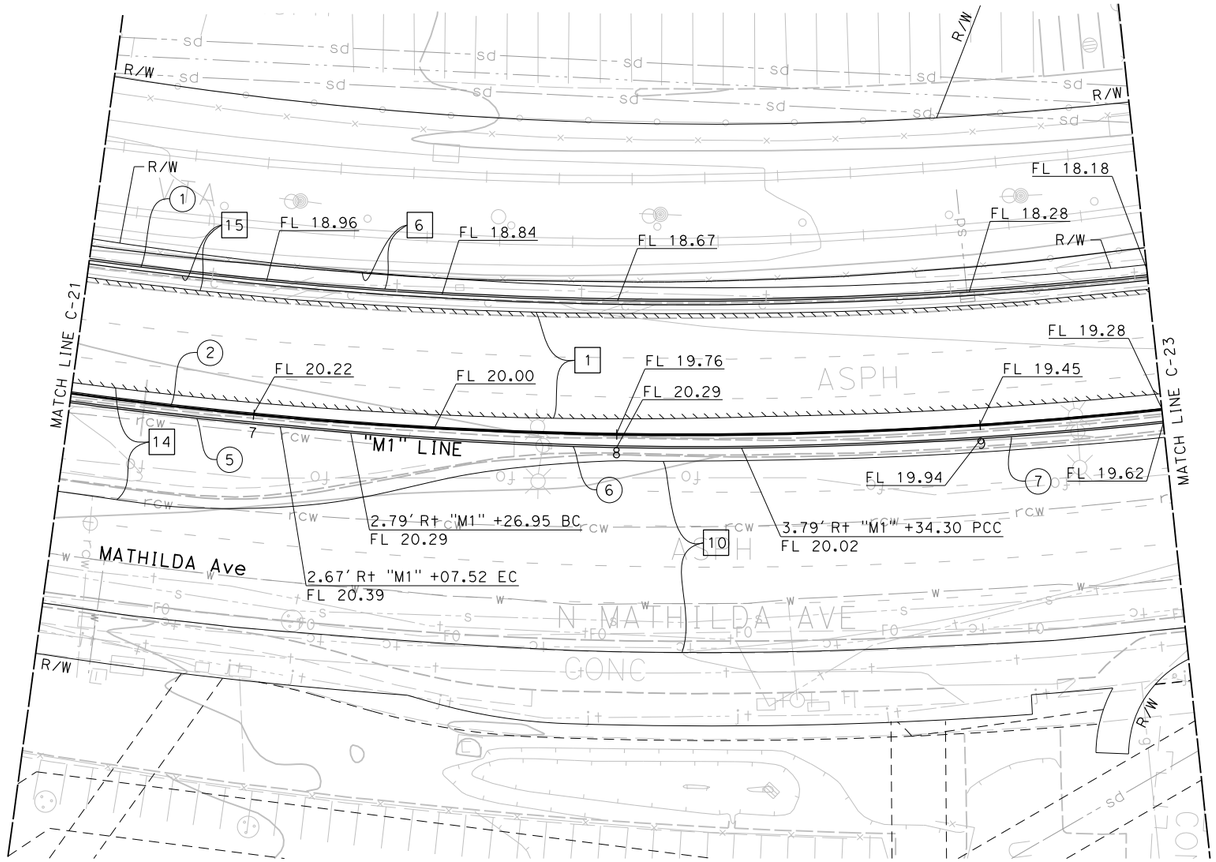

CURVE DATA

No. ⓟ	R	Δ	T	L
1	1200.00′	27°18′49.20"	291.57′	572.06′
2	1236.50′	27°21′30.84"	300.95′	590.43′
5	1239.50′	7°22′16.16"	79.84′	159.46′
6	1050.00′	5°52′23.79"	53.86′	107.63′
7	1240.50′	8°47′57.11"	95.44′	190.51′

FOR NOTES AND ABBREVIATIONS AND LEGEND, SEE SHEET C-13 AND L-1

CONSTRUCTION DETAILS

SCALE: 1" = 20′

C-22

CALCULATED-DESIGNED BY	CHECKED BY	REVISED BY	DATE REVISED
SHAWN VOGTMAN	STEVE LOUPE	SCV	01/15/18
		DAG	09/21/18

STATE OF CALIFORNIA - DEPARTMENT OF TRANSPORTATION
Caltrans
CONSULTANT FUNCTIONAL SUPERVISOR
TIMOTHY J. LEE

LAST REVISION 01-15-18
DATE PLOTTED => 9/21/2018
TIME PLOTTED => 11:48:13 AM

X:\237_101_Mathilda\000_CAD\Sheets\GA-Const_Details\0413000204ga022.dgn

BORDER LAST REVISED 7/2/2010
USERNAME => Dianneg
DGN FILE => 0413000204ga022.dgn
RELATIVE BORDER SCALE IS IN INCHES 0 1 2 3
UNIT 0000
PROJECT NUMBER & PHASE 0413000204

NOTE: FOR ACCURATE RIGHT OF WAY DATA, CONTACT RIGHT OF WAY ENGINEERING AT THE DISTRICT OFFICE.

Dist	COUNTY	ROUTE	POST MILES TOTAL PROJECT	SHEET No.	TOTAL SHEETS
04	SCL	101,237	45.2/45.8, 2.7/3.3	53	736

REGISTERED CIVIL ENGINEER 6-13-18 DATE

6-20-18
PLANS APPROVAL DATE

REGISTERED PROFESSIONAL ENGINEER STEVE LOUPE No. 63575 Exp. 9/30/20 CIVIL STATE OF CALIFORNIA

THE STATE OF CALIFORNIA OR ITS OFFICERS OR AGENTS SHALL NOT BE RESPONSIBLE FOR THE ACCURACY OR COMPLETENESS OF SCANNED COPIES OF THIS PLAN SHEET.

WMH CORPORATION
50 W San Fernando St
Suite 950
San Jose, CA 95113

VTA
3331 N First St
Building B
San Jose, Ca 95134

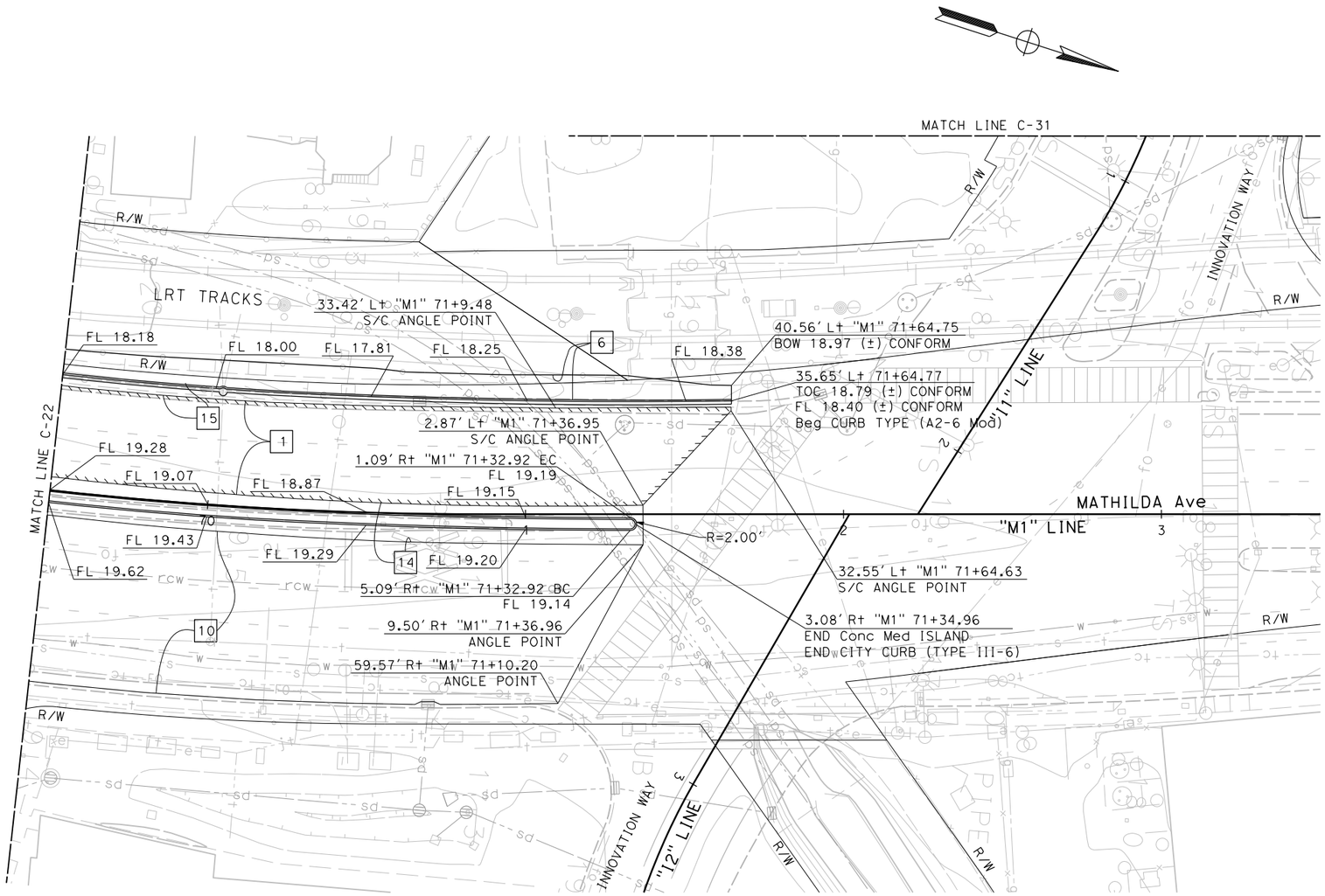

CONSTRUCTION DETAILS

SCALE: 1" = 20'

C-23

FOR NOTES AND ABBREVIATIONS AND LEGEND, SEE SHEET C-13 AND L-1

STATE OF CALIFORNIA - DEPARTMENT OF TRANSPORTATION
Caltrans

CONSULTANT FUNCTIONAL SUPERVISOR: TIMOTHY J. LEE
CALCULATED-DESIGNED BY: SHAWN VOGTMAN
CHECKED BY: STEVE LOUPE
REVISED BY: SCV
DATE REVISED: 01/15/18
DAG: 09/21/18

X:\237_101_Mathilda\000_CAD\Sheets\000_Submittals\Conformed Plans\0413000204ga023.dgn

LAST REVISION 01-15-18
DATE PLOTTED => 12/3/2018
TIME PLOTTED => 12:20:58 PM

BORDER LAST REVISED 7/2/2010
USERNAME => eilif
DGN FILE => 0413000204ga023.dgn
RELATIVE BORDER SCALE IS IN INCHES 0 1 2 3
UNIT 0000
PROJECT NUMBER & PHASE 0413000204

NOTE: FOR ACCURATE RIGHT OF WAY DATA, CONTACT
RIGHT OF WAY ENGINEERING AT THE DISTRICT OFFICE.

CURVE DATA

No.⊕	R	Δ	T	L
1	1633.29′	1°40′10"	23.80′	47.59′
2	1635.29′	1°38′01"	23.31′	46.62′
3	3527.53′	1°38′45"	50.67′	101.34′
4	3529.53′	1°38′45"	50.70′	101.40′
5	2411.00′	9°21′56"	197.49′	394.10′
6	2413.00′	9°21′56"	197.66′	394.42′
7	1681.29′	2°14′41"	32.94′	65.87′
8	3575.53′	1°38′45"	51.36′	102.72′
9	2459.00′	9°17′15"	199.74′	398.60′

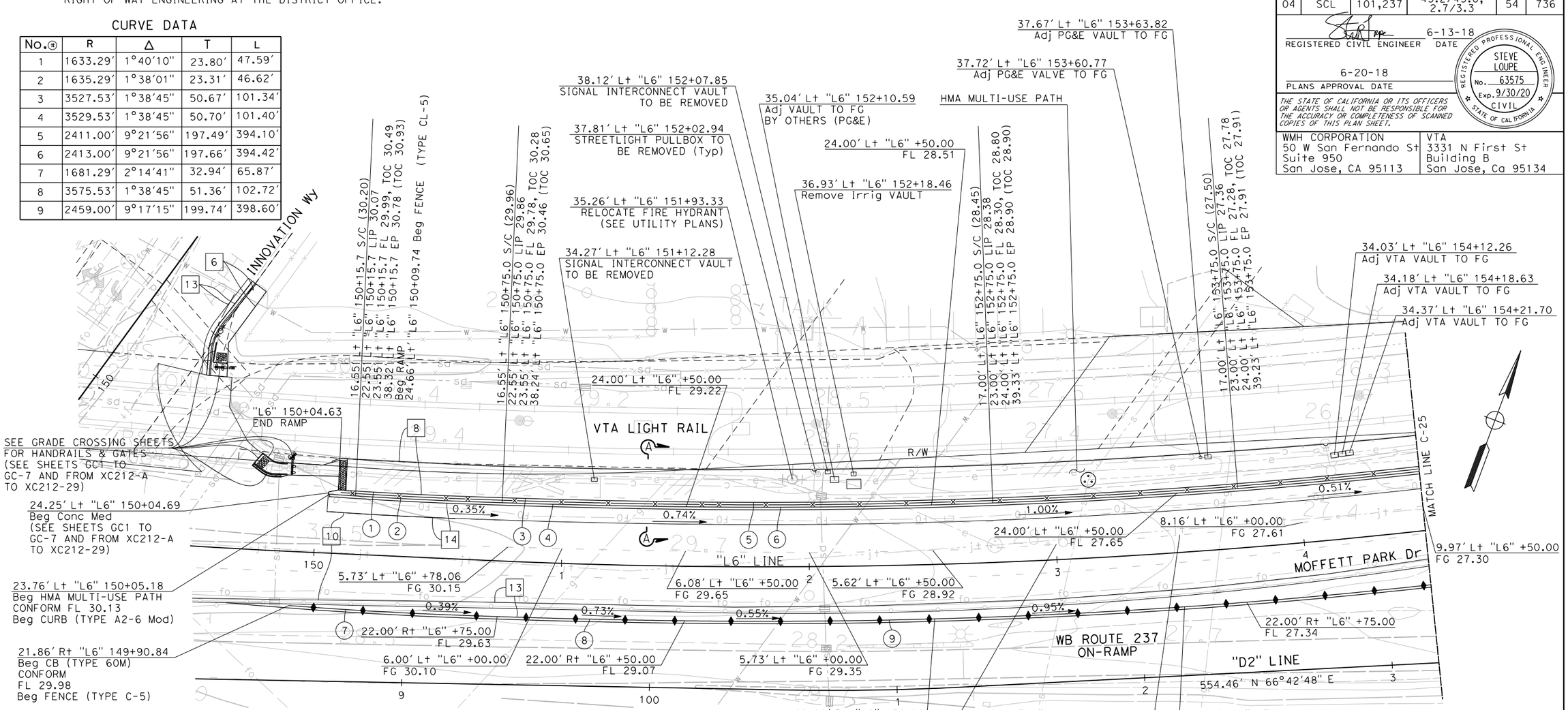

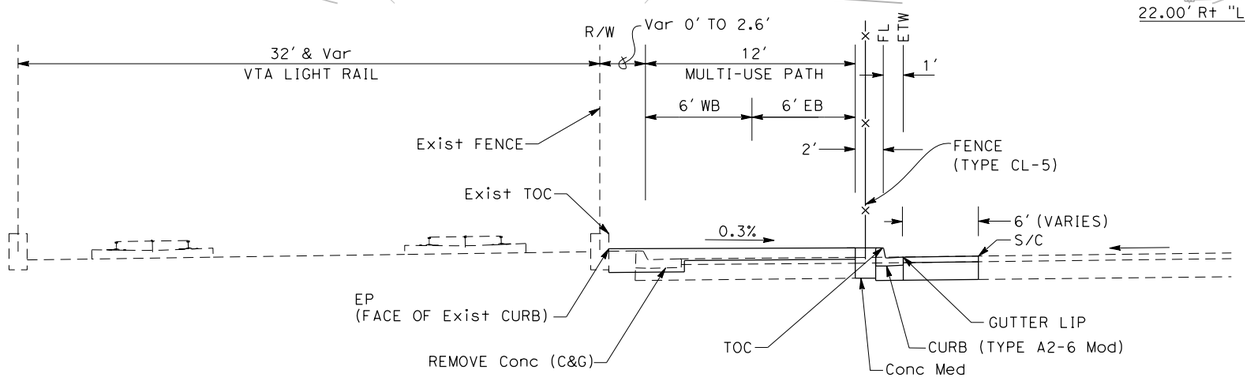

SECTION A-A
MULTI-USE TRAIL

FOR NOTES AND ABBREVIATIONS AND LEGEND, SEE SHEET C-13 AND L-1

Dist	COUNTY	ROUTE	POST MILES TOTAL PROJECT	SHEET No.	TOTAL SHEETS
04	SCL	101,237	45.2/45.8, 2.7/3.3	54	736

6-13-18
REGISTERED CIVIL ENGINEER DATE

6-20-18
PLANS APPROVAL DATE

REGISTERED PROFESSIONAL ENGINEER
STEVE LOUPE
No. 63575
Exp. 9/30/20
CIVIL
STATE OF CALIFORNIA

THE STATE OF CALIFORNIA OR ITS OFFICERS OR AGENTS SHALL NOT BE RESPONSIBLE FOR THE ACCURACY OR COMPLETENESS OF SCANNED COPIES OF THIS PLAN SHEET.

WMH CORPORATION
50 W San Fernando St
Suite 950
San Jose, CA 95113

VTA
3331 N First St
Building B
San Jose, Ca 95134

CONSTRUCTION DETAILS

SCALE: 1" = 20′

C-24

DATE REVISED	BY	CHECKED BY	CALCULATED-DESIGNED BY
09/21/18	DAG		
01/15/18	SCV		
	REVISED BY		
	DATE REVISED	STEVE LOUPE	SHAWN VOGTMAN

TIMOTHY J. LEE
CONSULTANT FUNCTIONAL SUPERVISOR

STATE OF CALIFORNIA - DEPARTMENT OF TRANSPORTATION
Caltrans

LAST REVISION 01-15-18
DATE PLOTTED => 12/3/2018
TIME PLOTTED => 12:20:59 PM

X:\237_101_Mathilda\000_CAD\Sheets\000_Submittals\Conformed Plans\0413000204ga024.dgn

BORDER LAST REVISED 7/2/2010 | USERNAME => eilif | DGN FILE => 0413000204ga024.dgn | RELATIVE BORDER SCALE IS IN INCHES 0 1 2 3 | UNIT 0000 | PROJECT NUMBER & PHASE 0413000204

NOTE: FOR ACCURATE RIGHT OF WAY DATA, CONTACT
RIGHT OF WAY ENGINEERING AT THE DISTRICT OFFICE.

Dist	COUNTY	ROUTE	POST MILES TOTAL PROJECT	SHEET No.	TOTAL SHEETS
04	SCL	101,237	45.2/45.8, 2.7/3.3	55	736

6-13-18
REGISTERED CIVIL ENGINEER DATE

STEVE LOUPE No. 63575 Exp. 9/30/20 CIVIL — REGISTERED PROFESSIONAL ENGINEER — STATE OF CALIFORNIA

6-20-18
PLANS APPROVAL DATE

THE STATE OF CALIFORNIA OR ITS OFFICERS OR AGENTS SHALL NOT BE RESPONSIBLE FOR THE ACCURACY OR COMPLETENESS OF SCANNED COPIES OF THIS PLAN SHEET.

WMH CORPORATION 50 W San Fernando St Suite 950 San Jose, CA 95113	VTA 3331 N First St Building B San Jose, Ca 95134

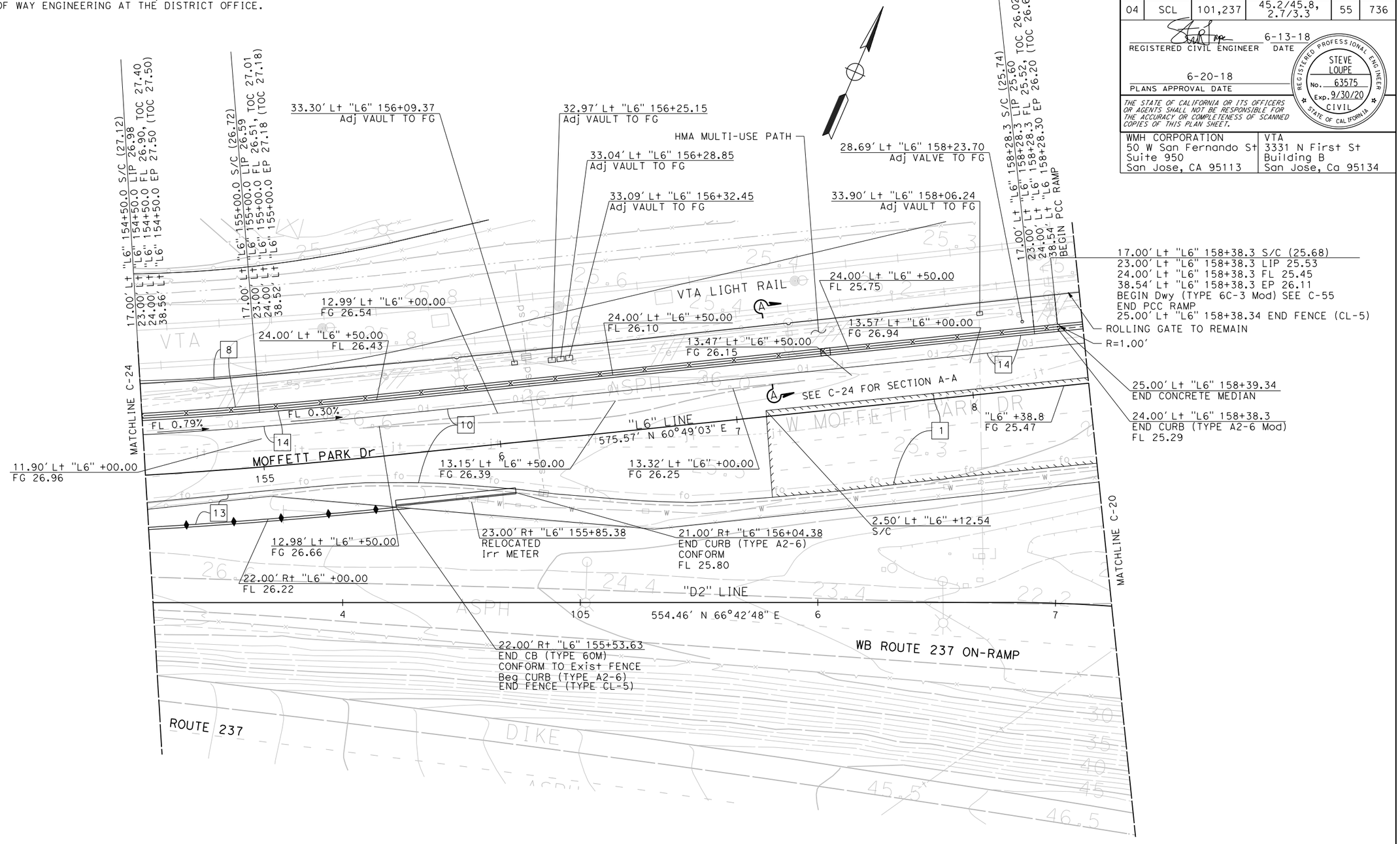

FOR NOTES AND ABBREVIATIONS AND LEGEND, SEE SHEET C-13 AND L-1

CONSTRUCTION DETAILS

SCALE: 1" = 20'

C-25

CALCULATED-DESIGNED BY	SHAWN VOGTMAN	REVISED BY	SCV	DAG
CHECKED BY	STEVE LOUPE	DATE REVISED	01/15/18	09/21/18

STATE OF CALIFORNIA - DEPARTMENT OF TRANSPORTATION
CONSULTANT FUNCTIONAL SUPERVISOR: TIMOTHY J. LEE

X:\237_101_Mathilda\000_CAD\Sheets\000_Submittals\Conformed Plans\0413000204ga025.dgn

LAST REVISION 01-15-18
DATE PLOTTED => 12/3/2018
TIME PLOTTED => 12:21:00 PM

BORDER LAST REVISED 7/2/2010 | USERNAME => eilif | DGN FILE => 0413000204ga025.dgn | RELATIVE BORDER SCALE IS IN INCHES 0 1 2 3 | UNIT 0000 | PROJECT NUMBER & PHASE 0413000204

NOTE: FOR ACCURATE RIGHT OF WAY DATA, CONTACT
RIGHT OF WAY ENGINEERING AT THE DISTRICT OFFICE.

Dist	COUNTY	ROUTE	POST MILES TOTAL PROJECT	SHEET No.	TOTAL SHEETS
04	SCL	101,237	45.2/45.8, 2.7/3.3	56	736

6-13-18
REGISTERED CIVIL ENGINEER DATE

REGISTERED PROFESSIONAL ENGINEER
STEVE LOUPE
No. 63575
Exp. 9/30/20
CIVIL
STATE OF CALIFORNIA

6-20-18
PLANS APPROVAL DATE

THE STATE OF CALIFORNIA OR ITS OFFICERS OR AGENTS SHALL NOT BE RESPONSIBLE FOR THE ACCURACY OR COMPLETENESS OF SCANNED COPIES OF THIS PLAN SHEET.

WMH CORPORATION
50 W San Fernando St
Suite 950
San Jose, CA 95113

VTA
3331 N First St
Building B
San Jose, Ca 95134

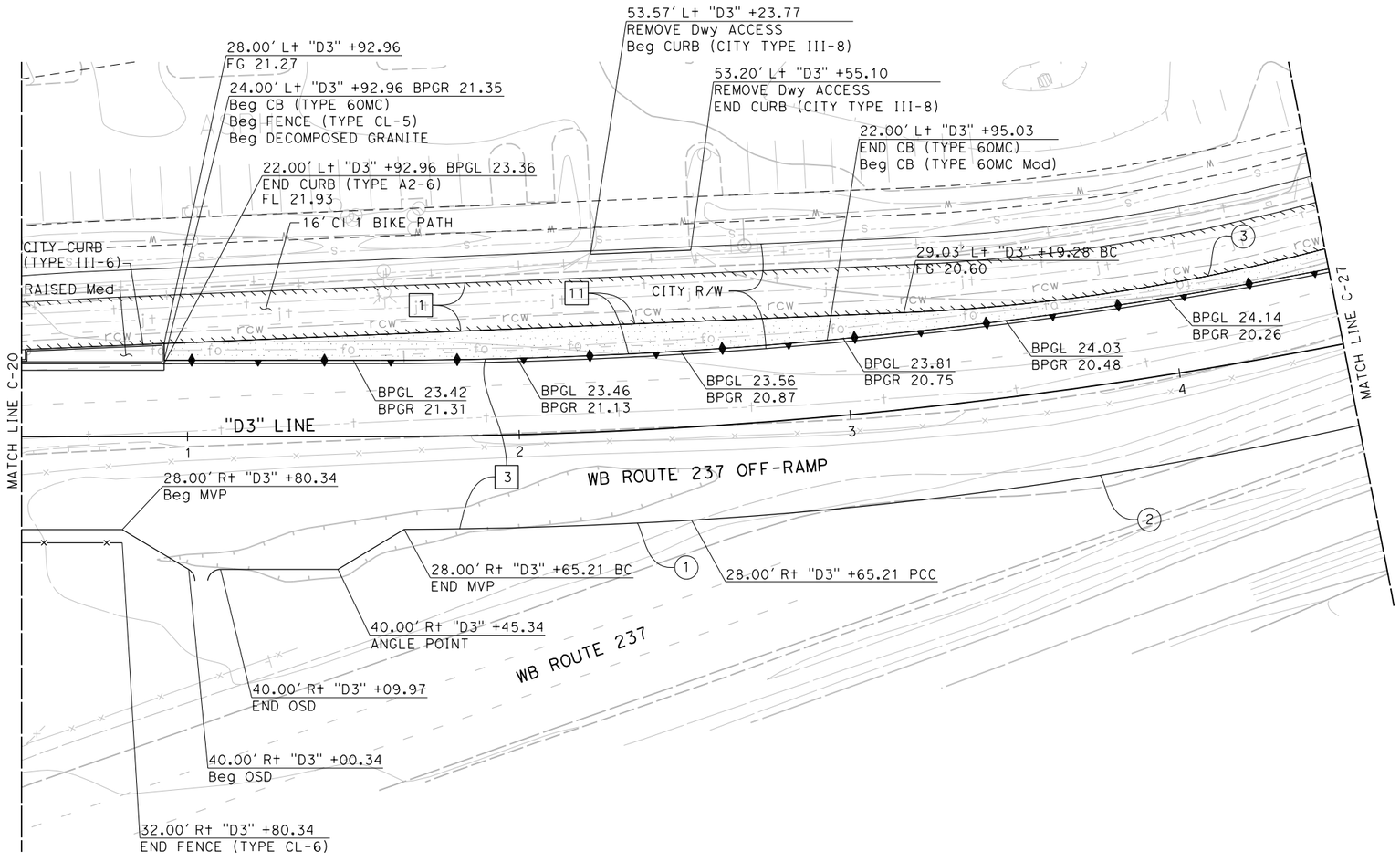

CURVE DATA

No.	R	Δ	T	L
1	1550.00′	3°12′9"	43.33′	86.63′
2	1264.28′	16°39′51"	185.16′	367.71′
3	594.00′	17°49′4"	93.11′	184.72′

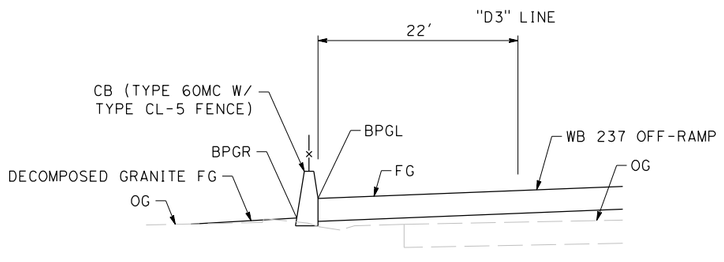

ELEVATION AT BARRIER (TYPE 60MC)
NOT TO SCALE

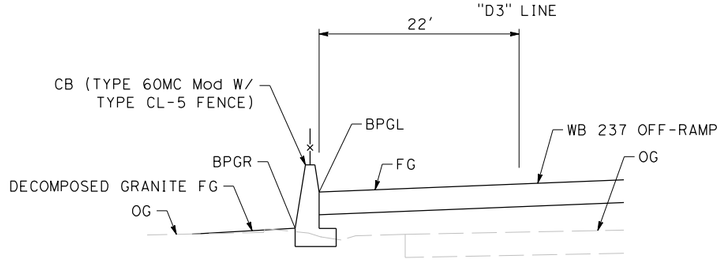

ELEVATION AT BARRIER (TYPE 60MC Mod)
NOT TO SCALE

CONSTRUCTION DETAILS

SCALE: 1" = 20′

C-26

FOR NOTES AND ABBREVIATIONS AND LEGEND, SEE SHEET C-13 AND L-1

REVISED BY	DATE REVISED
SCV	01/15/18

CALCULATED-DESIGNED BY: SHAWN VOGTMAN
CHECKED BY: STEVE LOUPE
CONSULTANT FUNCTIONAL SUPERVISOR: TIMOTHY J. LEE

STATE OF CALIFORNIA - DEPARTMENT OF TRANSPORTATION
Caltrans

LAST REVISION 01-15-18 | DATE PLOTTED => 12/3/2018 | TIME PLOTTED => 12:21:02 PM

X:\237_101_Mathilda\000_CAD\Sheets\000_Submittals\Conformed Plans\0413000204ga026.dgn

NOTE: FOR ACCURATE RIGHT OF WAY DATA, CONTACT RIGHT OF WAY ENGINEERING AT THE DISTRICT OFFICE.

Dist	COUNTY	ROUTE	POST MILES TOTAL PROJECT	SHEET No.	TOTAL SHEETS
04	SCL	101,237	45.2/45.8, 2.7/3.3	57	736

REGISTERED CIVIL ENGINEER 6-13-18 DATE

6-20-18
PLANS APPROVAL DATE

REGISTERED PROFESSIONAL ENGINEER STEVE LOUPE No. 63575 Exp. 9/30/18 CIVIL STATE OF CALIFORNIA

THE STATE OF CALIFORNIA OR ITS OFFICERS OR AGENTS SHALL NOT BE RESPONSIBLE FOR THE ACCURACY OR COMPLETENESS OF SCANNED COPIES OF THIS PLAN SHEET.

WMH CORPORATION
50 W San Fernando St
Suite 950
San Jose, CA 95113

VTA
3331 N First St
Building B
San Jose, Ca 95134

CURVE DATA

No.	R	Δ	T	L
1	230.00′	17°02′16″	34.45′	68.39′
2	246.00′	11°07′04″	23.94′	47.74′

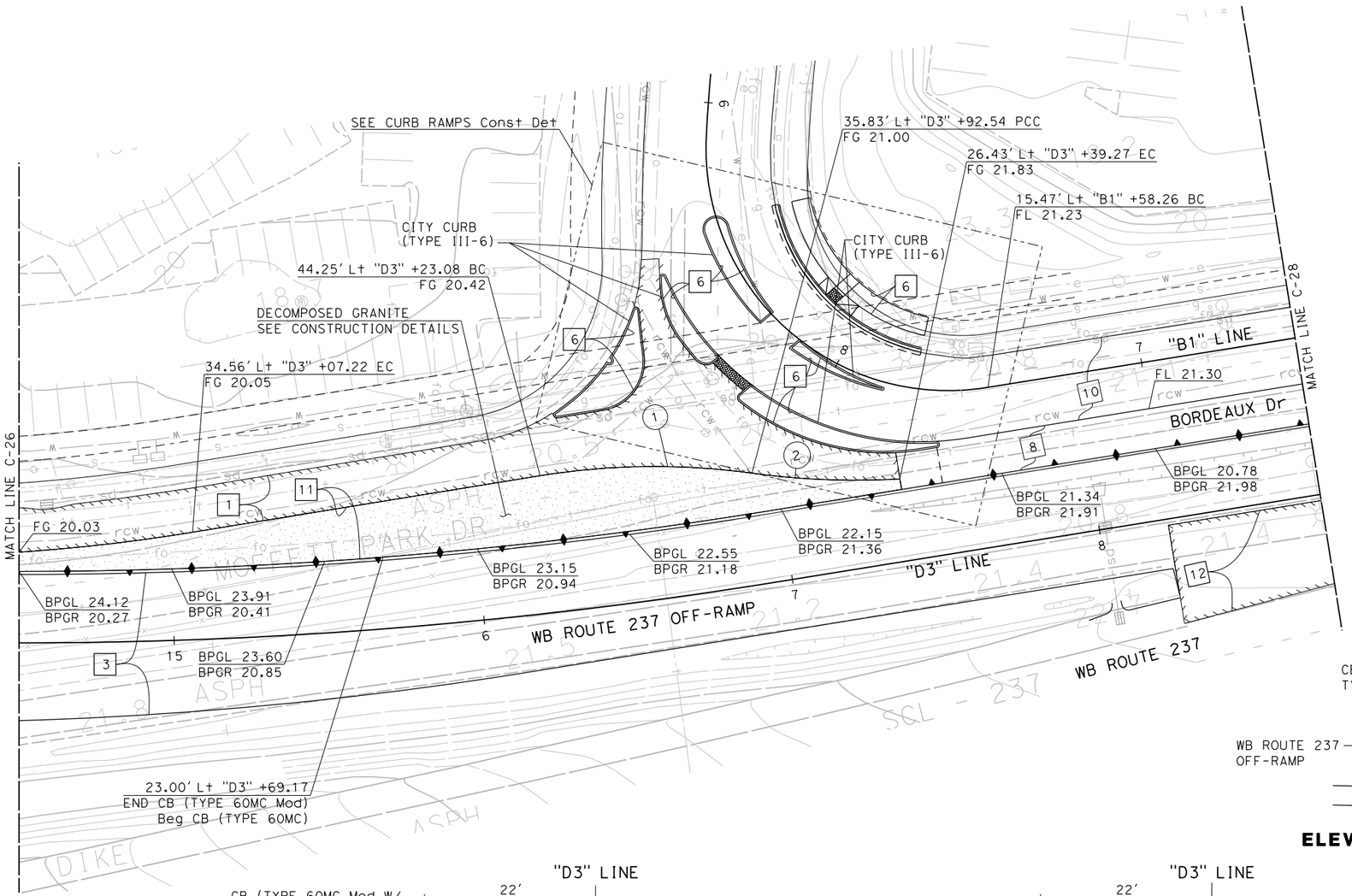

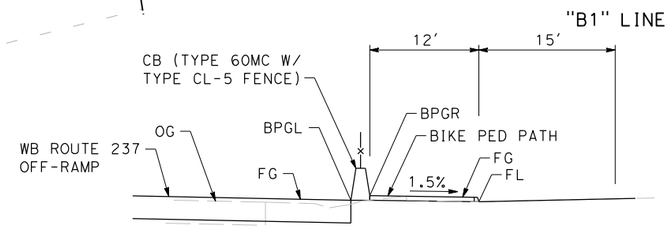

ELEVATION AT BARRIER (TYPE 60MC)
"B1" 58+23 TO "B1" 67+73
NOT TO SCALE

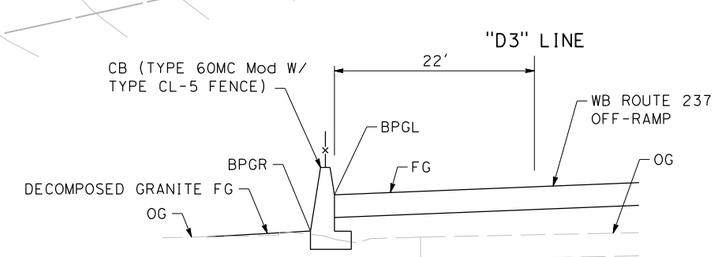

ELEVATION AT BARRIER (TYPE 60MC Mod)
"D3" 12+95 TO "D3" 15+69
NOT TO SCALE

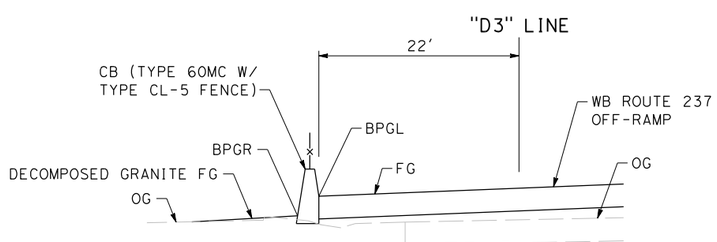

ELEVATION AT BARRIER (TYPE 60MC)
"D3" 15+69 TO "D3" 17+39
NOT TO SCALE

FOR NOTES AND ABBREVIATIONS AND LEGEND, SEE SHEET C-13 AND L-1

CONSTRUCTION DETAILS

SCALE: 1" = 20′

C-27

SMD	09/21/18	SCV	01/15/18	SHAWN VOGTMAN	STEVE LOUPE
REVISED BY	DATE REVISED	CALCULATED-DESIGNED BY	CHECKED BY	CONSULTANT FUNCTIONAL SUPERVISOR	TIMOTHY J. LEE

STATE OF CALIFORNIA - DEPARTMENT OF TRANSPORTATION
Caltrans

X:\237_101_Mathilda\000_CAD\Sheets\GA-Const_Details\0413000204ga027.dgn

LAST REVISION 01-15-18 DATE PLOTTED => 9/21/2018 TIME PLOTTED => 10:46:14 AM

BORDER LAST REVISED 7/2/2010 | USERNAME => sdwyer DGN FILE => 0413000204ga027.dgn | RELATIVE BORDER SCALE IS IN INCHES 0 1 2 3 | UNIT 0000 | PROJECT NUMBER & PHASE 0413000204

NOTE: FOR ACCURATE RIGHT OF WAY DATA, CONTACT
RIGHT OF WAY ENGINEERING AT THE DISTRICT OFFICE.

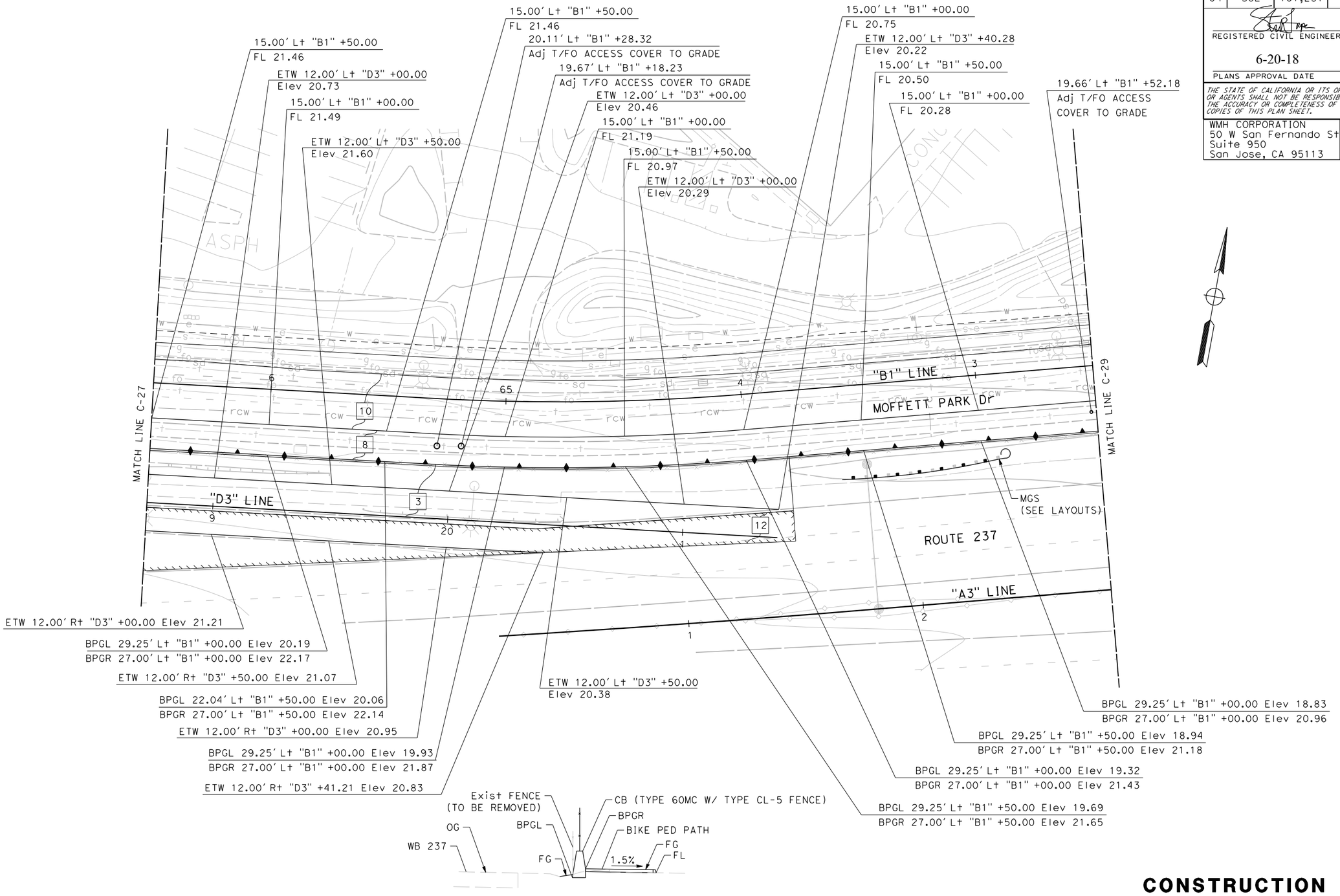

ELEVATION AT BARRIER (TYPE 60MC)
NOT TO SCALE

FOR NOTES AND ABBREVIATIONS AND LEGEND, SEE SHEET C-13 AND L-1

Dist	COUNTY	ROUTE	POST MILES TOTAL PROJECT	SHEET No.	TOTAL SHEETS
04	SCL	101,237	45.2/45.8, 2.7/3.3	58	736

REGISTERED CIVIL ENGINEER — DATE 6-13-18

PLANS APPROVAL DATE 6-20-18

REGISTERED PROFESSIONAL ENGINEER — STEVE LOUPE No. 63575 Exp. 9/30/18 CIVIL — STATE OF CALIFORNIA

THE STATE OF CALIFORNIA OR ITS OFFICERS OR AGENTS SHALL NOT BE RESPONSIBLE FOR THE ACCURACY OR COMPLETENESS OF SCANNED COPIES OF THIS PLAN SHEET.

WMH CORPORATION 50 W San Fernando St Suite 950 San Jose, CA 95113	VTA 3331 N First St Building B San Jose, Ca 95134

CONSTRUCTION DETAILS

SCALE: 1" = 20'

C-28

REVISED BY	DATE REVISED
SMD	09/21/18
SCV	01/15/18

CALCULATED-DESIGNED BY: SHAWN VOGTMAN
CHECKED BY: STEVE LOUPE

CONSULTANT FUNCTIONAL SUPERVISOR: TIMOTHY J. LEE

STATE OF CALIFORNIA - DEPARTMENT OF TRANSPORTATION

Caltrans

LAST REVISION: DATE PLOTTED => 9/21/2018
01-15-18 TIME PLOTTED => 11:44:10 AM

X:\237_101_Mathilda\000_CAD\Sheets\GA-Const_Details\0413000204ga028.dgn

BORDER LAST REVISED 7/2/2010 | USERNAME => sdwyer | DGN FILE => 0413000204ga028.dgn | RELATIVE BORDER SCALE IS IN INCHES 0 1 2 3 | UNIT 0000 | PROJECT NUMBER & PHASE 0413000204

NOTE: FOR ACCURATE RIGHT OF WAY DATA, CONTACT
RIGHT OF WAY ENGINEERING AT THE DISTRICT OFFICE.

Dist	COUNTY	ROUTE	POST MILES TOTAL PROJECT	SHEET No.	TOTAL SHEETS
04	SCL	101,237	45.2/45.8, 2.7/3.3	59	736

REGISTERED CIVIL ENGINEER — 6-13-18 DATE

6-20-18
PLANS APPROVAL DATE

REGISTERED PROFESSIONAL ENGINEER — STEVE LOUPE — No. 63575 — Exp. 9/30/18 — CIVIL — STATE OF CALIFORNIA

THE STATE OF CALIFORNIA OR ITS OFFICERS OR AGENTS SHALL NOT BE RESPONSIBLE FOR THE ACCURACY OR COMPLETENESS OF SCANNED COPIES OF THIS PLAN SHEET.

WMH CORPORATION
50 W San Fernando St
Suite 950
San Jose, CA 95113

VTA
3331 N First St
Building B
San Jose, Ca 95134

15.00' Lt "B1" +50.00 FL 20.07
19.46' Lt "B1" +47.85
Adj T/FO ACCESS
COVER TO GRADE (AT&T)
15.00' Lt "B1" +00.00 FL 19.86
15.00' Lt "B1" +50.00 FL 19.65
15.00' Lt "B1" +00.00 FL 19.45
15.00' Lt "B1" +50.00 FL 19.25
15.00' Lt "B1" +00.00 FL 19.01
15.00' Lt "B1" +50.00 FL 18.75
23.68' Lt "B1" +13.87
ANGLE POINT
FG 19.20
15.00' Lt "B1" +00.00 FL 18.56
15.12' Lt "B1" +86.62
Beg RAMP
FL 18.51
15.00' Lt "B1" +79.65
END RAMP
FL 18.46
19.10' Lt "B1" +72.10

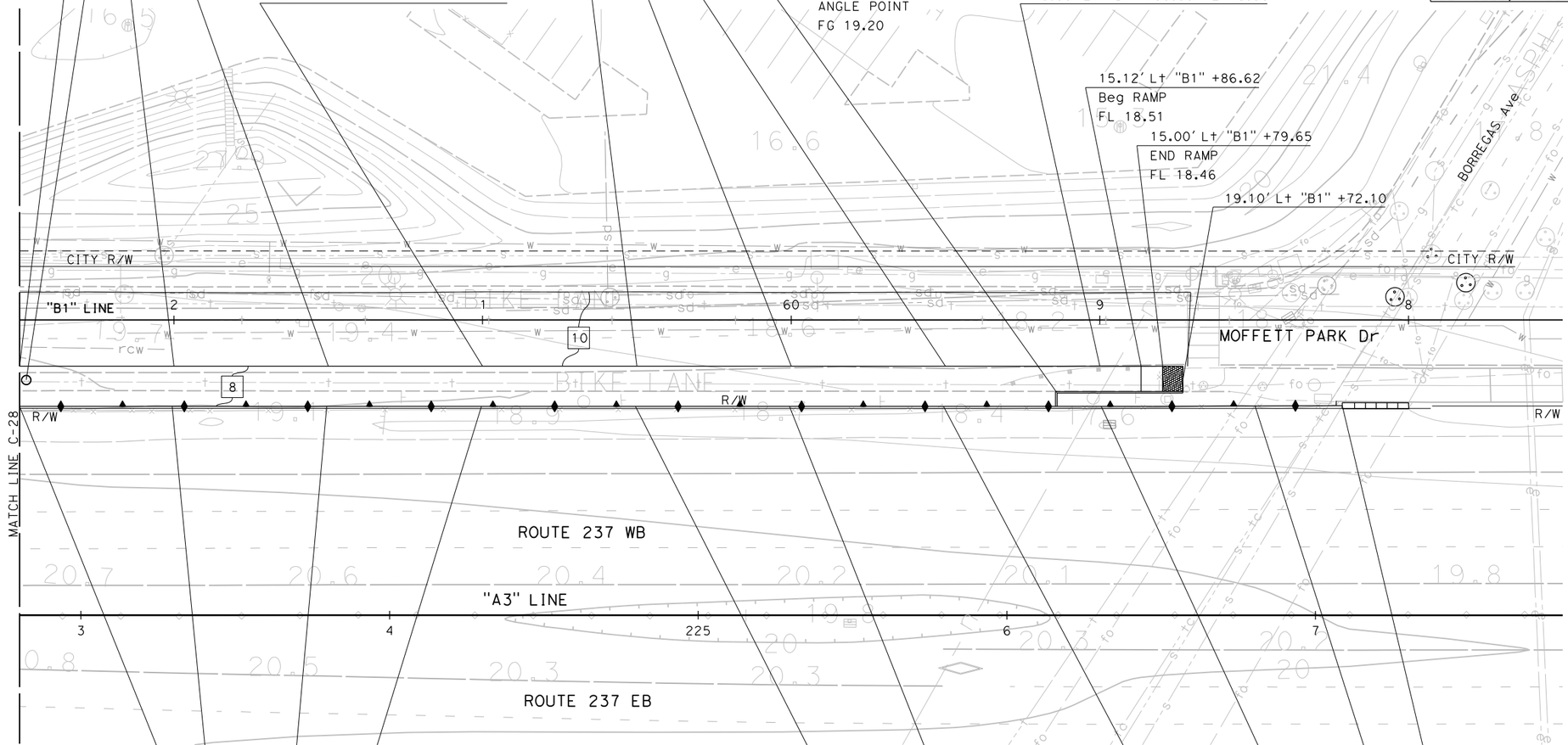

BPGL 29.25' Lt "B1" +50.00 Elev 18.70
BPGR 27.00' Lt "B1" +50.00 Elev 20.75

BPGL 29.25' Lt "B1" +00.00 Elev 18.60
BPGR 27.00' Lt "B1" +00.00 Elev 20.53

BPGL 29.25' Lt "B1" +50.00 Elev 18.47
BPGR 27.00' Lt "B1" +50.00 Elev 20.33

BPGL 29.25' Lt "B1" +00.00 Elev 18.36
BPGR 27.00' Lt "B1" +00.00 Elev 20.13

BPGL 29.25' Lt "B1" +50.00 Elev 18.24
BPGR 27.00' Lt "B1" +50.00 Elev 19.93

BPGL 29.25' Lt "B1" +00.00 Elev 18.13
BPGR 27.00' Lt "B1" +00.00 Elev 19.69

BPGL 29.25' Lt "B1" +50.00 Elev 18.02
BPGR 27.00' Lt "B1" +50.00 Elev 19.46

BPGL 29.25' Lt "B1" +00.00 Elev 17.90
BPGR 27.00' Lt "B1" +00.00 Elev 19.25

BPGL 29.25' Lt "B1" +50.00 Elev 17.98
BPGR 27.00' Lt "B1" +50.00 Elev 19.25

BPGL 29.25' Lt "B1" +21.44 Elev 18.03
BPGR 26.76' Lt "B1" +21.44 Elev 19.25
CRASH CUSHION

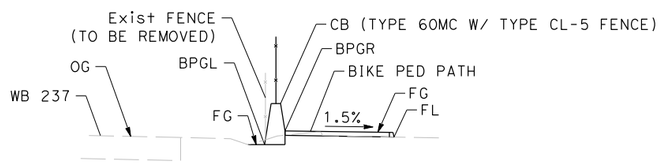

ELEVATION AT BARRIER (TYPE 60MC)
NOT TO SCALE

FOR NOTES AND ABBREVIATIONS AND LEGEND, SEE SHEET C-13 AND L-1

CONSTRUCTION DETAILS

SCALE: 1" = 20'

C-29

CALCULATED-DESIGNED BY			
CHECKED BY	SHAWN VOGTMAN	SMD	09/21/18
	STEVE LOUPE	SCV	01/15/18
CONSULTANT FUNCTIONAL SUPERVISOR	TIMOTHY J. LEE	REVISED BY	DATE REVISED

STATE OF CALIFORNIA - DEPARTMENT OF TRANSPORTATION — Caltrans

LAST REVISION 01-15-18 — DATE PLOTTED => 9/21/2018 — TIME PLOTTED => 1:07:46 PM

X:\237_101_Mathilda\000_CAD\Sheets\GA-Const_Details\0413000204ga029.dgn

BORDER LAST REVISED 7/2/2010 | USERNAME => sdwyer | DGN FILE => 0413000204ga029.dgn | RELATIVE BORDER SCALE IS IN INCHES 0 1 2 3 | UNIT 0000 | PROJECT NUMBER & PHASE 0413000204

NOTE: FOR ACCURATE RIGHT OF WAY DATA, CONTACT
RIGHT OF WAY ENGINEERING AT THE DISTRICT OFFICE.

Dist	COUNTY	ROUTE	POST MILES TOTAL PROJECT	SHEET No.	TOTAL SHEETS
04	SCL	101,237	45.2/45.8, 2.7/3.3	60	736

6-13-18
REGISTERED CIVIL ENGINEER DATE

6-20-18
PLANS APPROVAL DATE

REGISTERED PROFESSIONAL ENGINEER
STEVE LOUPE
No. 63575
Exp. 9/30/18
CIVIL
STATE OF CALIFORNIA

THE STATE OF CALIFORNIA OR ITS OFFICERS OR AGENTS SHALL NOT BE RESPONSIBLE FOR THE ACCURACY OR COMPLETENESS OF SCANNED COPIES OF THIS PLAN SHEET.

WMH CORPORATION 50 W San Fernando St Suite 950 San Jose, CA 95113	VTA 3331 N First St Building B San Jose, Ca 95134

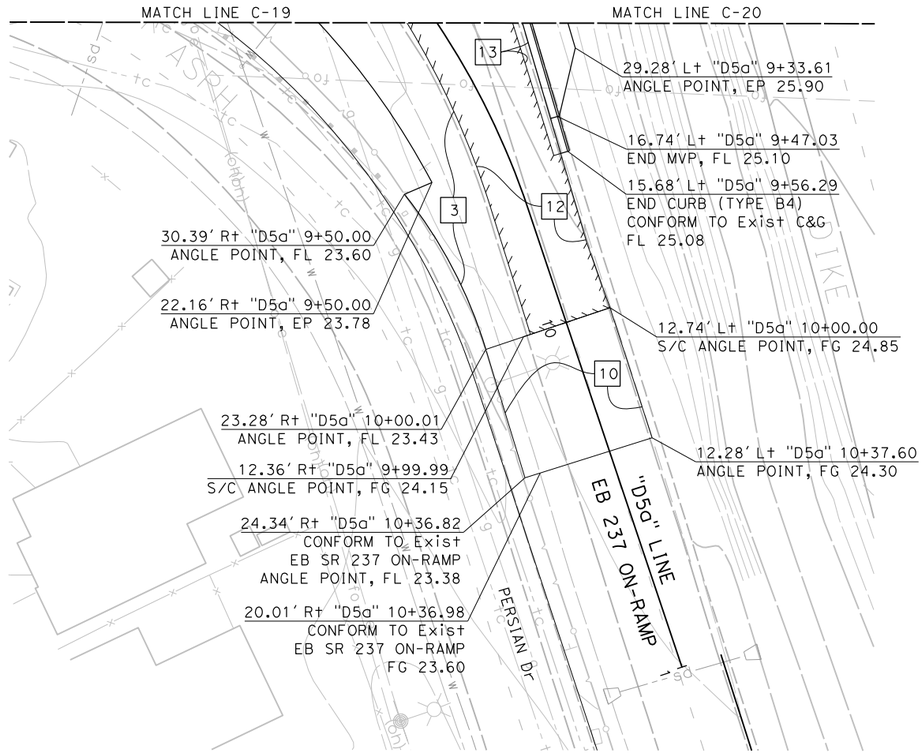

FOR NOTES AND ABBREVIATIONS AND LEGEND, SEE SHEET C-13 AND L-1

CONSTRUCTION DETAILS

SCALE: 1" = 20'

C-30

CALCULATED-DESIGNED BY				
CHECKED BY				
SHAWN VOGTMAN	STEVE LOUPE	SCV	01/15/18	
		EF	09/21/18	

CONSULTANT FUNCTIONAL SUPERVISOR: TIMOTHY J. LEE

STATE OF CALIFORNIA - DEPARTMENT OF TRANSPORTATION

Caltrans

X:\237_101_Mathilda\000_CAD\Sheets\GA-Const_Details\0413000204ga030.dgn

BORDER LAST REVISED 7/2/2010 | USERNAME => sdwyer | DGN FILE => 0413000204ga030.dgn | RELATIVE BORDER SCALE IS IN INCHES 0 1 2 3 | UNIT 0000 | PROJECT NUMBER & PHASE 0413000204

LAST REVISION 01-15-18 | DATE PLOTTED => 9/21/2018 | TIME PLOTTED => 1:13:34 PM

NOTE: FOR ACCURATE RIGHT OF WAY DATA, CONTACT
RIGHT OF WAY ENGINEERING AT THE DISTRICT OFFICE.

CURVE DATA

No.	R	Δ	T	L
1	160.00′	19°53′39"	40.33′	55.56′
2	200.00′	28°17′54"	50.42′	98.78′

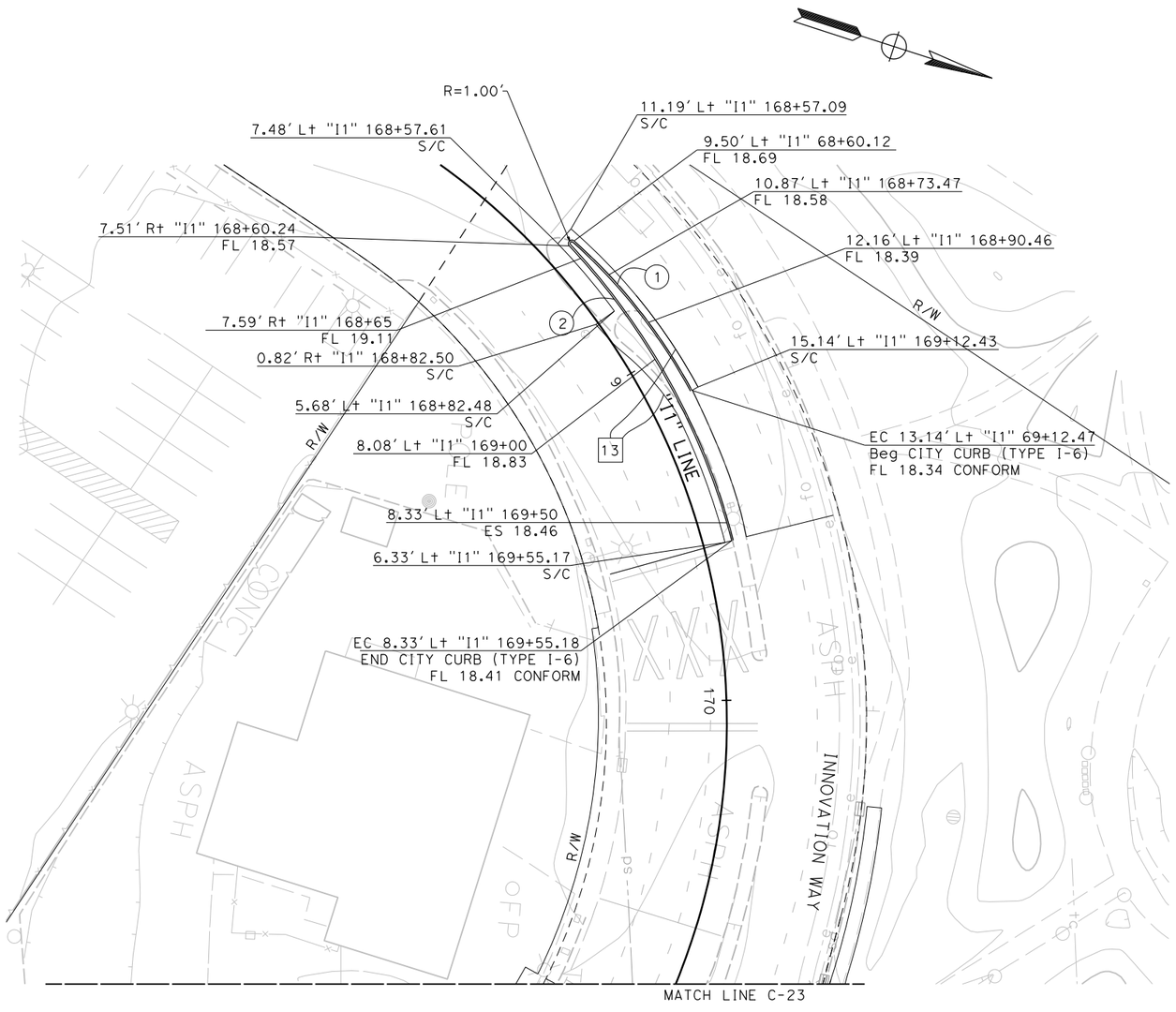

FOR NOTES AND ABBREVIATIONS AND
LEGEND, SEE SHEET C-13 AND L-1

Dist	COUNTY	ROUTE	POST MILES TOTAL PROJECT	SHEET No.	TOTAL SHEETS
04	SCL	101,237	45.2/45.8, 2.7/3.3	61	736

REGISTERED CIVIL ENGINEER — 6-13-18 DATE

6-20-18
PLANS APPROVAL DATE

REGISTERED PROFESSIONAL ENGINEER
STEVE LOUPE
No. 63575
Exp. 9/30/18
CIVIL
STATE OF CALIFORNIA

THE STATE OF CALIFORNIA OR ITS OFFICERS OR AGENTS SHALL NOT BE RESPONSIBLE FOR THE ACCURACY OR COMPLETENESS OF SCANNED COPIES OF THIS PLAN SHEET.

WMH CORPORATION
50 W San Fernando St
Suite 950
San Jose, CA 95113

VTA
3331 N First St
Building B
San Jose, Ca 95134

CONSTRUCTION DETAILS

SCALE: 1" = 20′

C-31

REVISED BY	DATE REVISED
SCV	01/15/18

CALCULATED-DESIGNED BY: SHAWN VOGTMAN
CHECKED BY: STEVE LOUPE
CONSULTANT FUNCTIONAL SUPERVISOR: TIMOTHY J. LEE

STATE OF CALIFORNIA - DEPARTMENT OF TRANSPORTATION
Caltrans

X:\237_101_Mathilde\000_CAD\Sheets\GA-Const Details\0413000204ga031.dgn

LAST REVISION: 01-15-18
DATE PLOTTED => 6/20/2018
TIME PLOTTED => 11:03:08 AM

BORDER LAST REVISED 7/2/2010 | USERNAME => Eilif | DGN FILE => 0413000204ga031.dgn | RELATIVE BORDER SCALE IS IN INCHES 0 1 2 3 | UNIT 0000 | PROJECT NUMBER & PHASE 0413000204

NOTE: FOR ACCURATE RIGHT OF WAY DATA, CONTACT
RIGHT OF WAY ENGINEERING AT THE DISTRICT OFFICE.

CURVE DATA

No.Ⓡ	R	Δ	T	L
1	54.00′	14°15′18"	6.75′	13.44′
2	200.00′	29°35′21"	52.82′	103.29′
3	167.00′	38°29′11"	58.30′	112.18′
4	157.00′	44°42′01"	64.55′	122.49′
5	126.00′	83°54′9"	113.26′	184.51′

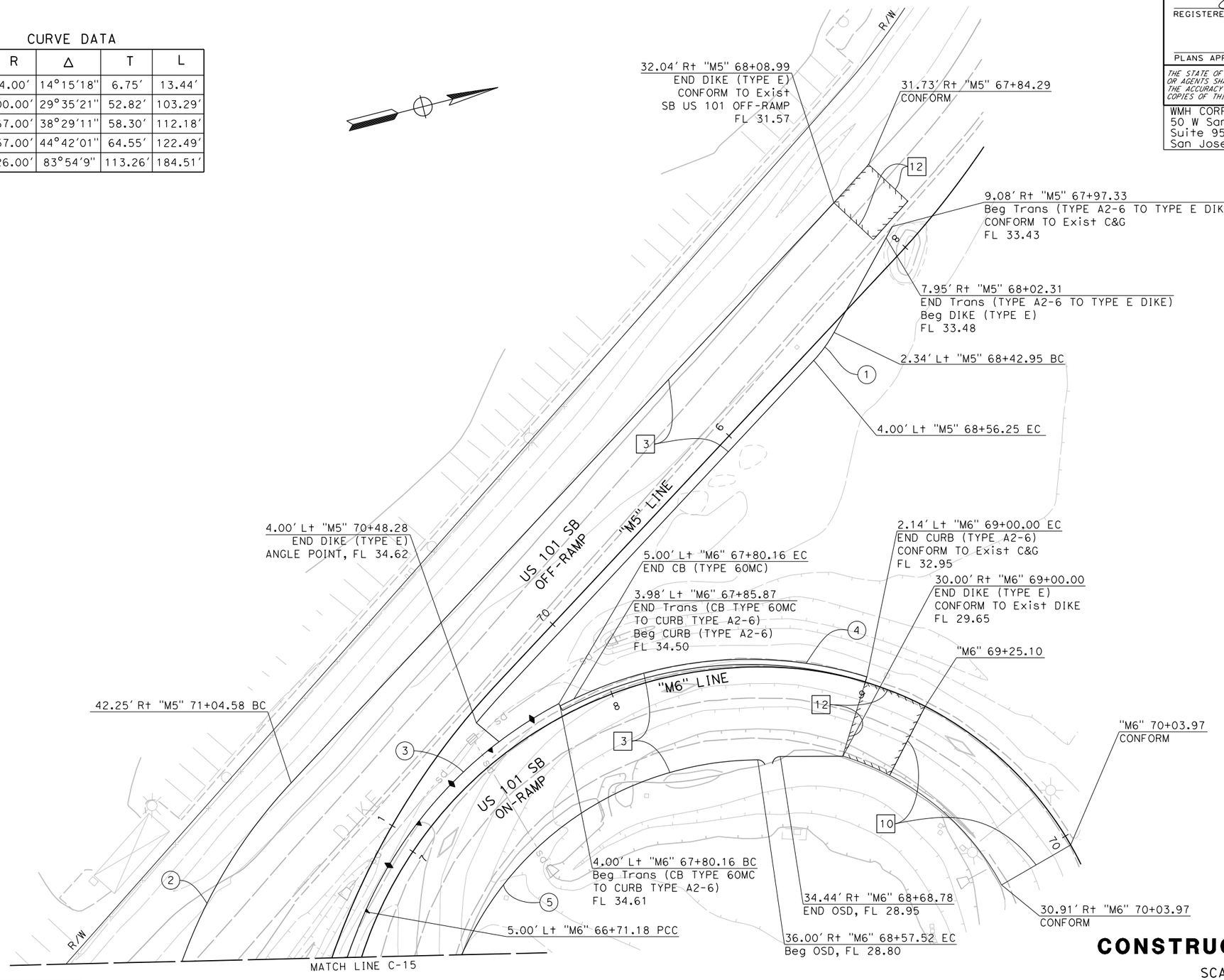

FOR NOTES AND ABBREVIATIONS AND
LEGEND, SEE SHEET C-13 AND L-1

CONSTRUCTION DETAILS

SCALE: 1" = 20′

C-32

Dist	COUNTY	ROUTE	POST MILES TOTAL PROJECT	SHEET No.	TOTAL SHEETS
04	SCL	101,237	45.2/45.8, 2.7/3.3	62	736

6-13-18
REGISTERED CIVIL ENGINEER — DATE

STEVE LOUPE No. 63575 Exp. 9/30/20 CIVIL — REGISTERED PROFESSIONAL ENGINEER — STATE OF CALIFORNIA

6-20-18
PLANS APPROVAL DATE

THE STATE OF CALIFORNIA OR ITS OFFICERS OR AGENTS SHALL NOT BE RESPONSIBLE FOR THE ACCURACY OR COMPLETENESS OF SCANNED COPIES OF THIS PLAN SHEET.

WMH CORPORATION
50 W San Fernando St
Suite 950
San Jose, CA 95113

VTA
3331 N First St
Building B
San Jose, Ca 95134

REVISED BY	DATE REVISED
SCV	01/15/18

CALCULATED-DESIGNED BY: SHAWN VOGTMAN
CHECKED BY: STEVE LOUPE
CONSULTANT FUNCTIONAL SUPERVISOR: TIMOTHY J. LEE
STATE OF CALIFORNIA - DEPARTMENT OF TRANSPORTATION
Caltrans

LAST REVISION 01-15-18 — DATE PLOTTED => 12/3/2018 TIME PLOTTED => 12:21:03 PM

X:\237_101_Mathilda\000_CAD\Sheets\000_Submittals\Conformed Plans\0413000204ga032.dgn

BORDER LAST REVISED 7/2/2010 | USERNAME => eilif DGN FILE => 0413000204ga032.dgn | RELATIVE BORDER SCALE IS IN INCHES 0 1 2 3 | UNIT 0000 | PROJECT NUMBER & PHASE 0413000204

NOTE: FOR ACCURATE RIGHT OF WAY DATA, CONTACT RIGHT OF WAY ENGINEERING AT THE DISTRICT OFFICE.

Dist	COUNTY	ROUTE	POST MILES TOTAL PROJECT	SHEET No.	TOTAL SHEETS
04	SCL	101,237	45.2/45.8, 2.7/3.3	63	736

REGISTERED CIVIL ENGINEER 6-13-18 DATE

6-20-18
PLANS APPROVAL DATE

REGISTERED PROFESSIONAL ENGINEER STEVE LOUPE No. 63575 Exp. 9/30/18 CIVIL STATE OF CALIFORNIA

THE STATE OF CALIFORNIA OR ITS OFFICERS OR AGENTS SHALL NOT BE RESPONSIBLE FOR THE ACCURACY OR COMPLETENESS OF SCANNED COPIES OF THIS PLAN SHEET.

WMH CORPORATION
50 W San Fernando St
Suite 950
San Jose, CA 95113

VTA
3331 N First St
Building B
San Jose, Ca 95134

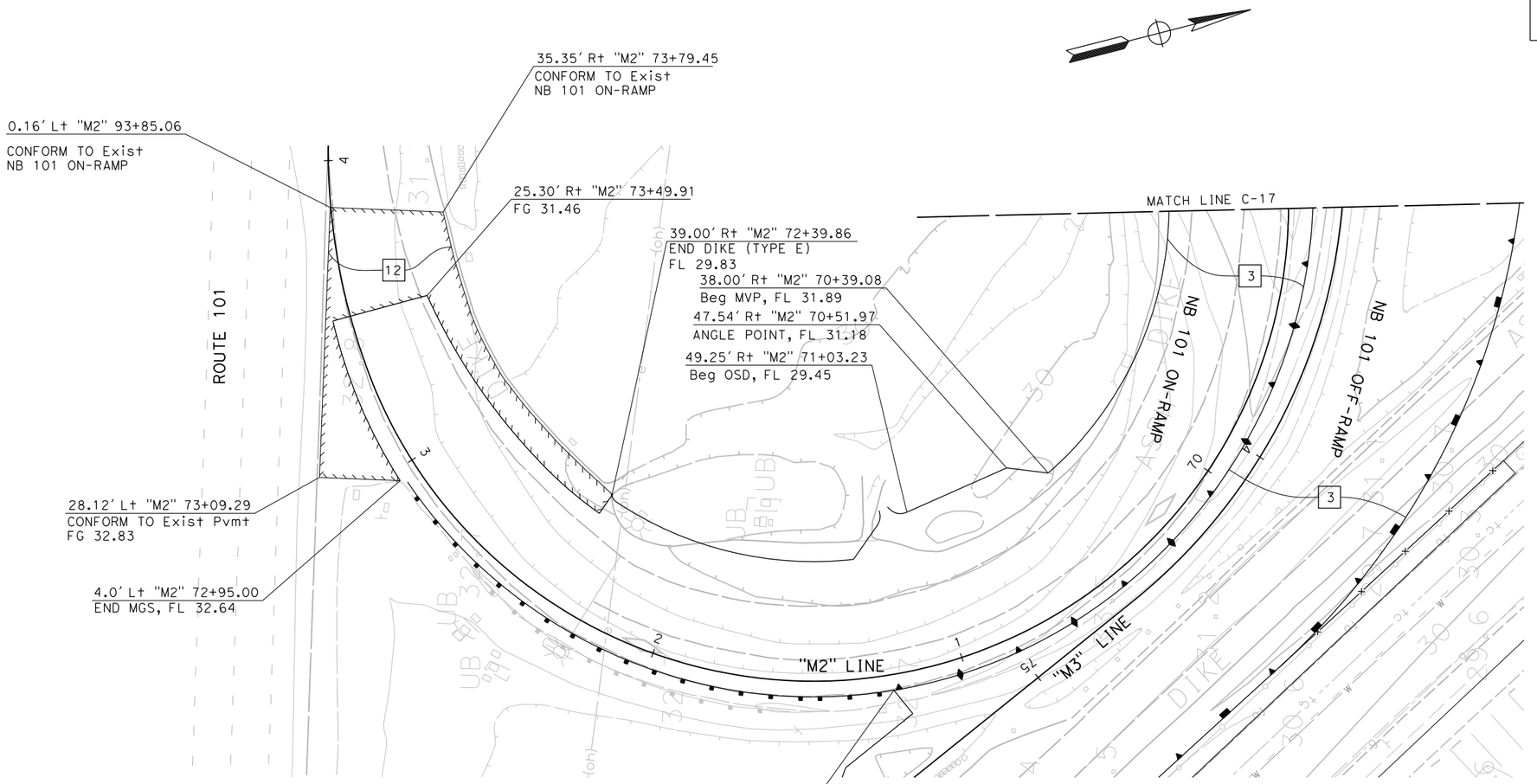

CONSTRUCTION DETAILS

SCALE: 1" = 20'

C-33

FOR NOTES AND ABBREVIATIONS AND LEGEND, SEE SHEET C-13 AND L-1

STATE OF CALIFORNIA - DEPARTMENT OF TRANSPORTATION
Caltrans

CONSULTANT FUNCTIONAL SUPERVISOR: TIMOTHY J. LEE
CALCULATED-DESIGNED BY: EILI FARAH
CHECKED BY: STEVE LOUPE
REVISED BY: SCV
DATE REVISED: 01/15/18
DAG: 09/20/18

X:\237_101_Mathilda\000_CAD\Sheets\GA-Const_Details\0413000204ga033.dgn

LAST REVISION 01-15-18
DATE PLOTTED => 9/20/2018
TIME PLOTTED => 1:22:13 PM

BORDER LAST REVISED 7/2/2010
USERNAME => Dianneg
DGN FILE => 0413000204ga033.dgn
RELATIVE BORDER SCALE IS IN INCHES 0 1 2 3
UNIT 0000
PROJECT NUMBER & PHASE 0413000204

NOTE: FOR ACCURATE RIGHT OF WAY DATA, CONTACT
RIGHT OF WAY ENGINEERING AT THE DISTRICT OFFICE.

Dist	COUNTY	ROUTE	POST MILES TOTAL PROJECT	SHEET No.	TOTAL SHEETS
04	SCL	101,237	45.2/45.8, 2.7/3.3	64	736

REGISTERED CIVIL ENGINEER — DATE: 6-13-18

PLANS APPROVAL DATE: 6-20-18

REGISTERED PROFESSIONAL ENGINEER — STEVE LOUPE — No. 63575 — Exp. 9/30/18 — CIVIL — STATE OF CALIFORNIA

THE STATE OF CALIFORNIA OR ITS OFFICERS OR AGENTS SHALL NOT BE RESPONSIBLE FOR THE ACCURACY OR COMPLETENESS OF SCANNED COPIES OF THIS PLAN SHEET.

WMH CORPORATION
50 W San Fernando St
Suite 950
San Jose, CA 95113

VTA
3331 N First St
Building B
San Jose, Ca 95134

FOR NOTES AND ABBREVIATIONS AND LEGEND, SEE SHEET C-13 AND L-1

CONSTRUCTION DETAILS

SCALE: 1" = 50'

C-34

	CALCULATED-DESIGNED BY	SCOTT DWYER	REVISED BY	SCV
	CHECKED BY	STEVE LOUPE	DATE REVISED	01/15/18

STATE OF CALIFORNIA - DEPARTMENT OF TRANSPORTATION

CONSULTANT FUNCTIONAL SUPERVISOR: TIMOTHY J. LEE

X:\237_101_Morrilldo\000_CAD\Sheets\GA-Const_Details\0413000204ga034.dgn

LAST REVISION 01-15-18 | DATE PLOTTED => 6/20/2018 | TIME PLOTTED => 11:03:14 AM

BORDER LAST REVISED 7/2/2010 | USERNAME => Eilif | DGN FILE => 0413000204ga034.dgn | RELATIVE BORDER SCALE IS IN INCHES 0 1 2 3 | UNIT 0000 | PROJECT NUMBER & PHASE 0413000204

NOTE: FOR ACCURATE RIGHT OF WAY DATA, CONTACT
RIGHT OF WAY ENGINEERING AT THE DISTRICT OFFICE.

NOTES:

1. SEE LAYOUT SHEETS FOR CONCRETE BARRIER LOCATIONS
2. FOR INFORMATION NOT SHOWN SEE STANDARD PLANS

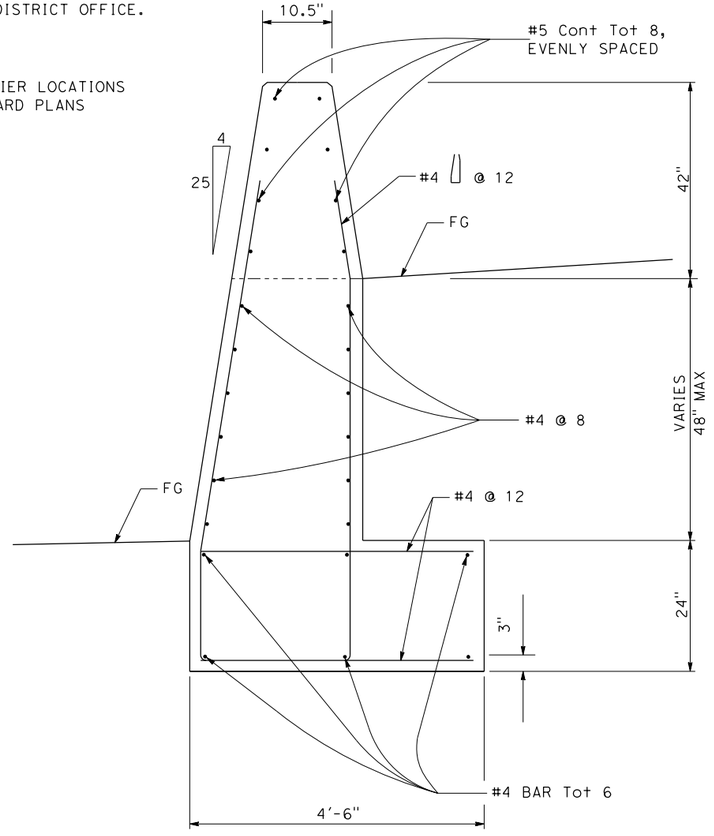

CONCRETE BARRIER (TYPE 60MC Mod)

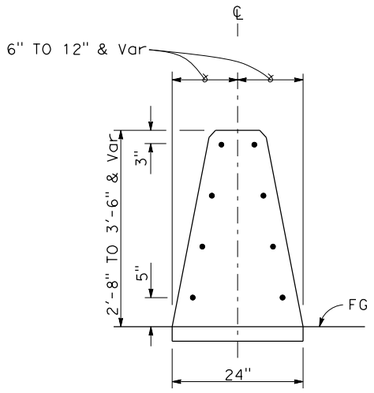

CONCRETE BARRIER (TYPE 60M)
SECTION B-B

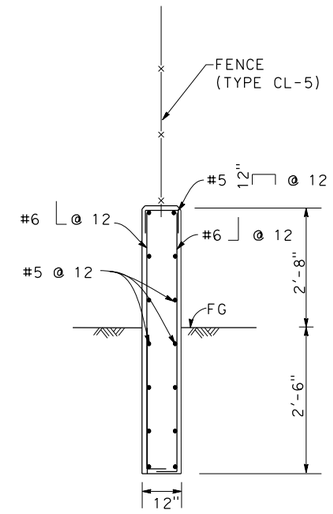

CONCRETE BARRIER (TYPE 736B Mod)
SECTION C-C

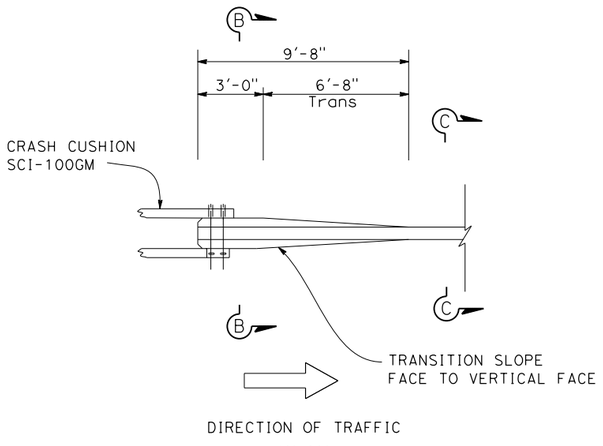

PLAN

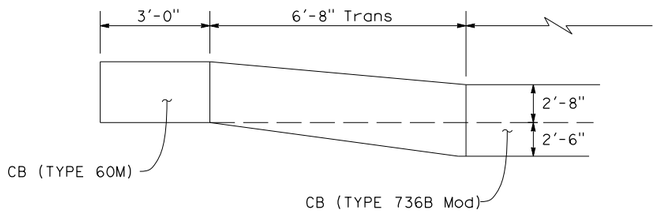

PROFILE

SCI-100GM CRASH CUSHION TO CB (TYPE 736B Mod) CONNECTION DETAIL

CONSTRUCTION DETAILS

NO SCALE

C-35

Dist	COUNTY	ROUTE	POST MILES TOTAL PROJECT	SHEET No.	TOTAL SHEETS
04	SCL	101,237	45.2/45.8, 2.7/3.3	65	736

6-13-18
REGISTERED CIVIL ENGINEER DATE

STEVE LOUPE No. 63575 Exp. 9/30/20 CIVIL — REGISTERED PROFESSIONAL ENGINEER — STATE OF CALIFORNIA

6-20-18
PLANS APPROVAL DATE

THE STATE OF CALIFORNIA OR ITS OFFICERS OR AGENTS SHALL NOT BE RESPONSIBLE FOR THE ACCURACY OR COMPLETENESS OF SCANNED COPIES OF THIS PLAN SHEET.

WMH CORPORATION
50 W San Fernando St
Suite 950
San Jose, CA 95113

VTA
3331 N First St
Building B
San Jose, Ca 95134

DATE	REVISED BY	DATE REVISED
DAG	SCV	01/15/18 09/20/18

CALCULATED-DESIGNED BY: SHAWN VOGTMAN
CHECKED BY: STEVE LOUPE

STATE OF CALIFORNIA - DEPARTMENT OF TRANSPORTATION
Caltrans®

CONSULTANT FUNCTIONAL SUPERVISOR: TIMOTHY J. LEE

LAST REVISION 01-15-18
DATE PLOTTED => 12/3/2018
TIME PLOTTED => 12:21:04 PM

X:\237_101_Mathilda\000_CAD\Sheets\000_Submittals\Conformed Plans\0413000204ga035.dgn

BORDER LAST REVISED 7/2/2010 | USERNAME => eilif | DGN FILE => 0413000204ga035.dgn | RELATIVE BORDER SCALE IS IN INCHES 0 1 2 3 | UNIT 0000 | PROJECT NUMBER & PHASE 0413000204

Dist	COUNTY	ROUTE	POST MILES TOTAL PROJECT	SHEET No.	TOTAL SHEETS
04	SCL	101,237	45.2/45.8, 2.7/3.3	66	736

REGISTERED CIVIL ENGINEER — 6-13-18 DATE

STEVE LOUPE No. 63575 Exp. 9/30/18 CIVIL — REGISTERED PROFESSIONAL ENGINEER — STATE OF CALIFORNIA

6-20-18
PLANS APPROVAL DATE

THE STATE OF CALIFORNIA OR ITS OFFICERS OR AGENTS SHALL NOT BE RESPONSIBLE FOR THE ACCURACY OR COMPLETENESS OF SCANNED COPIES OF THIS PLAN SHEET.

WMH CORPORATION
50 W San Fernando St
Suite 950
San Jose, CA 95113

VTA
3331 N First St
Building B
San Jose, Ca 95134

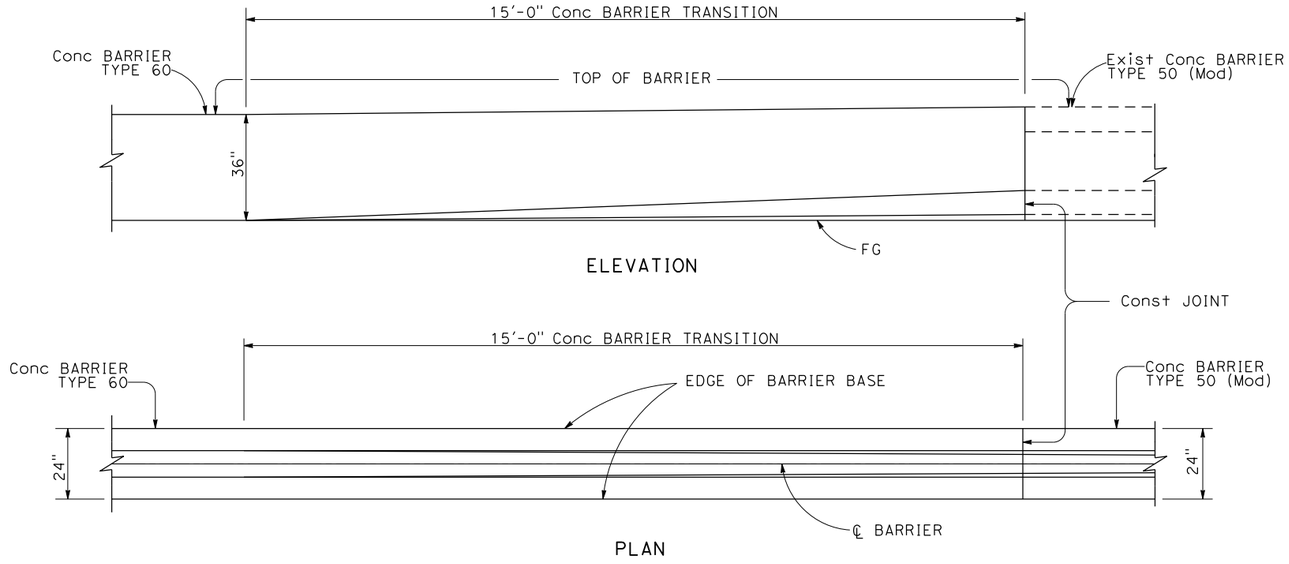

TRANSITION CONCRETE BARRIER TYPE 60 TO CONCRETE BARRIER TYPE 50 (Mod)

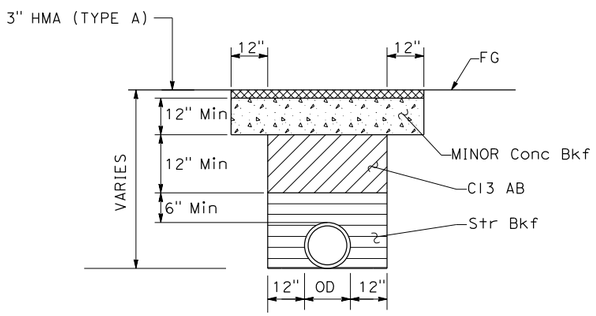

IRRIGATION CROSS OVER ROADWAY TRENCH BACKFILL

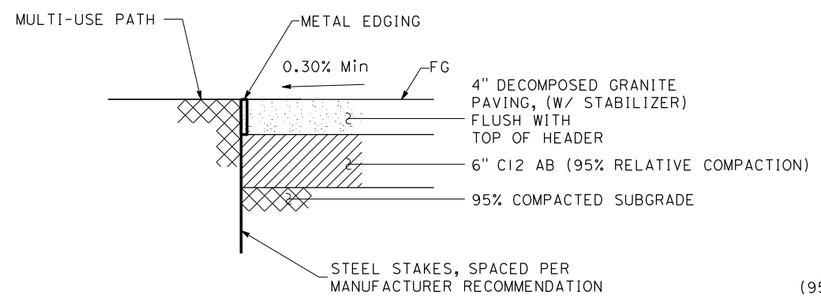

NOTE: METAL EDGING TO BE BLACK

DECOMPOSED GRANITE PAVING WITH METAL EDGING

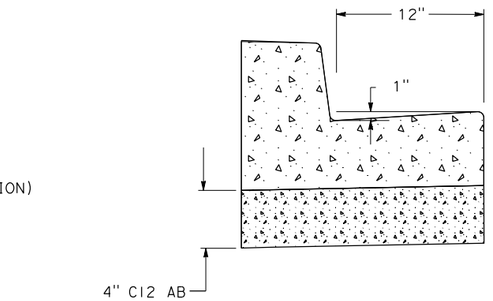

NOTE: SEE CALTRANS STANDARD PLAN A87A (TYPE A2-6 CURB) FOR OTHER INFORMATION NOT SHOWN

CURB (TYPE A2-6 MOD)

CONSTRUCTION DETAILS

NO SCALE

C-36

REVISED BY	SCV	01/15/18
DATE REVISED		
KATHERINE SCHMIDT		
STEVE LOUPE		
CALCULATED-DESIGNED BY		
CHECKED BY		
CONSULTANT FUNCTIONAL SUPERVISOR	TIMOTHY J. LEE	
STATE OF CALIFORNIA - DEPARTMENT OF TRANSPORTATION	Caltrans	

X:\237_101_Mathilda\000_CAD\Sheets\GA-Const_Details\0413000204ga036.dgn

LAST REVISION 01-15-18 — DATE PLOTTED => 6/20/2018 — TIME PLOTTED => 11:03:18 AM

BORDER LAST REVISED 7/2/2010 | USERNAME => Eilif | DGN FILE => 0413000204ga036.dgn | RELATIVE BORDER SCALE IS IN INCHES 0 1 2 3 | UNIT 0000 | PROJECT NUMBER & PHASE 0413000204

NOTE: FOR ACCURATE RIGHT OF WAY DATA, CONTACT
RIGHT OF WAY ENGINEERING AT THE DISTRICT OFFICE.

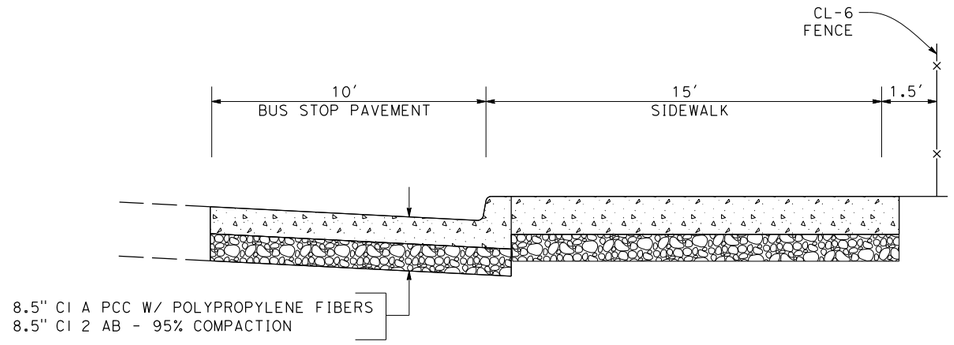

SECTION D-D
NO SCALE

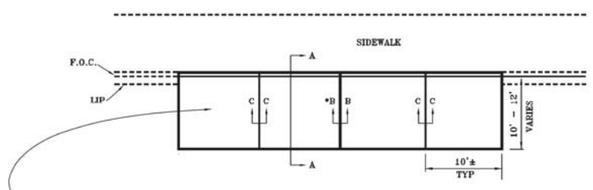

PLAN VIEW

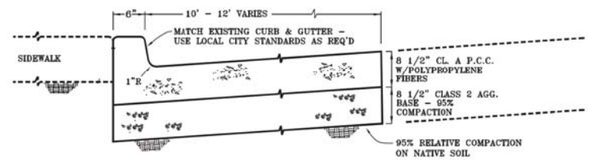

SECTION A–A
PCC PAVEMENT WITH MONOLITHIC CURB

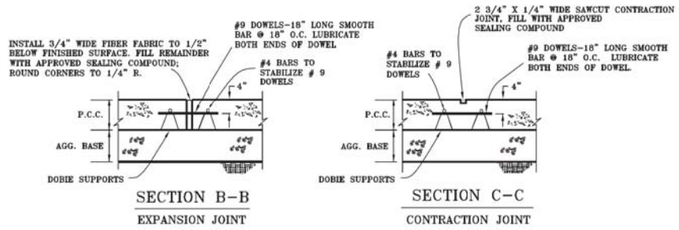

SECTION B–B
EXPANSION JOINT

SECTION C–C
CONTRACTION JOINT

BUS STOP AND PASSENGER FACILITIES STANDARD DETAILS

SANTA CLARA Valley Transportation Authority

BUS STOP PAVEMENT DETAILS

FIGURE 10

DATE AUG 2008

Dist	COUNTY	ROUTE	POST MILES TOTAL PROJECT	SHEET No.	TOTAL SHEETS
04	SCL	101,237	45.2/45.8, 2.7/3.3	67	736

REGISTERED CIVIL ENGINEER — 6-13-18 DATE

STEVE LOUPE No. 63575 Exp. 9/30/18 CIVIL — REGISTERED PROFESSIONAL ENGINEER — STATE OF CALIFORNIA

6-20-18
PLANS APPROVAL DATE

THE STATE OF CALIFORNIA OR ITS OFFICERS OR AGENTS SHALL NOT BE RESPONSIBLE FOR THE ACCURACY OR COMPLETENESS OF SCANNED COPIES OF THIS PLAN SHEET.

WMH CORPORATION 50 W San Fernando St Suite 950 San Jose, CA 95113	VTA 3331 N First St Building B San Jose, Ca 95134

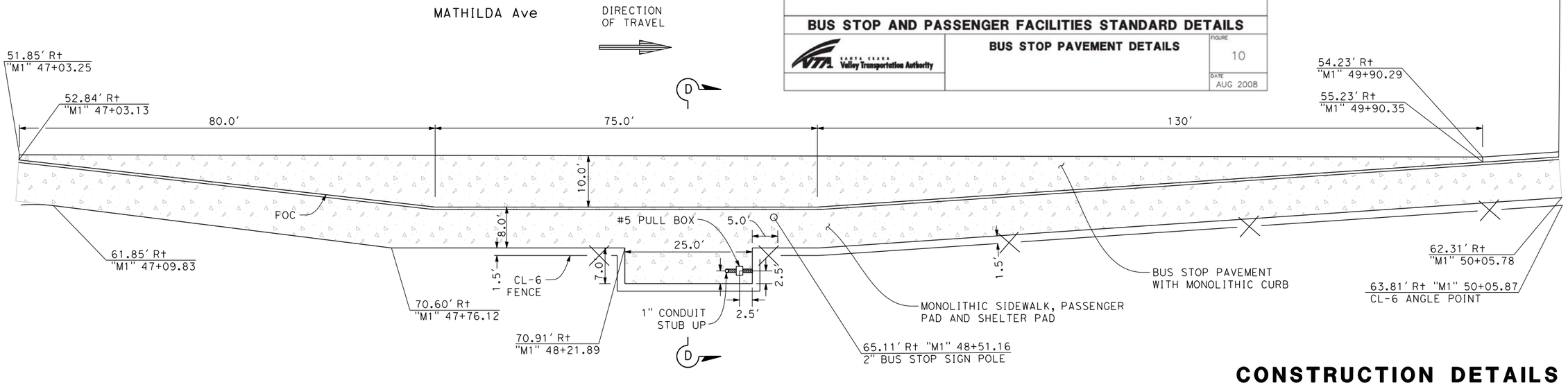

PLAN
SCALE: 1" = 10'
BUS PAD DETAIL

CONSTRUCTION DETAILS

C-37

CALCULATED-DESIGNED BY	SHAWN VOGTMAN	REVISED BY	SCV		
CHECKED BY	STEVE LOUPE	DATE REVISED	01/15/18		
SUPERVISOR	TIMOTHY J. LEE	CONSULTANT FUNCTIONAL SUPERVISOR			
STATE OF CALIFORNIA - DEPARTMENT OF TRANSPORTATION					

X:\Y237_101_Mathilda\000_CAD\Sheets\GA-Const Details\0413000204ga037.dgn

LAST REVISION 01-15-18 DATE PLOTTED => 6/20/2018 TIME PLOTTED => 11:03:20 AM

BORDER LAST REVISED 7/2/2010 | USERNAME => Eilif | DGN FILE => 0413000204ga037.dgn | RELATIVE BORDER SCALE IS IN INCHES 0 1 2 3 | UNIT 0000 | PROJECT NUMBER & PHASE 0413000204

NOTE: FOR ACCURATE RIGHT OF WAY DATA, CONTACT
RIGHT OF WAY ENGINEERING AT THE DISTRICT OFFICE.

Dist	COUNTY	ROUTE	POST MILES TOTAL PROJECT	SHEET No.	TOTAL SHEETS
04	SCL	101,237	45.2/45.8, 2.7/3.3	68	736

REGISTERED CIVIL ENGINEER — 6-13-18 DATE

6-20-18
PLANS APPROVAL DATE

REGISTERED PROFESSIONAL ENGINEER — STEVE LOUPE — No. 63575 — Exp. 9/30/18 — CIVIL — STATE OF CALIFORNIA

THE STATE OF CALIFORNIA OR ITS OFFICERS OR AGENTS SHALL NOT BE RESPONSIBLE FOR THE ACCURACY OR COMPLETENESS OF SCANNED COPIES OF THIS PLAN SHEET.

WMH CORPORATION
50 W San Fernando St
Suite 950
San Jose, CA 95113

VTA
3331 N First St
Building B
San Jose, Ca 95134

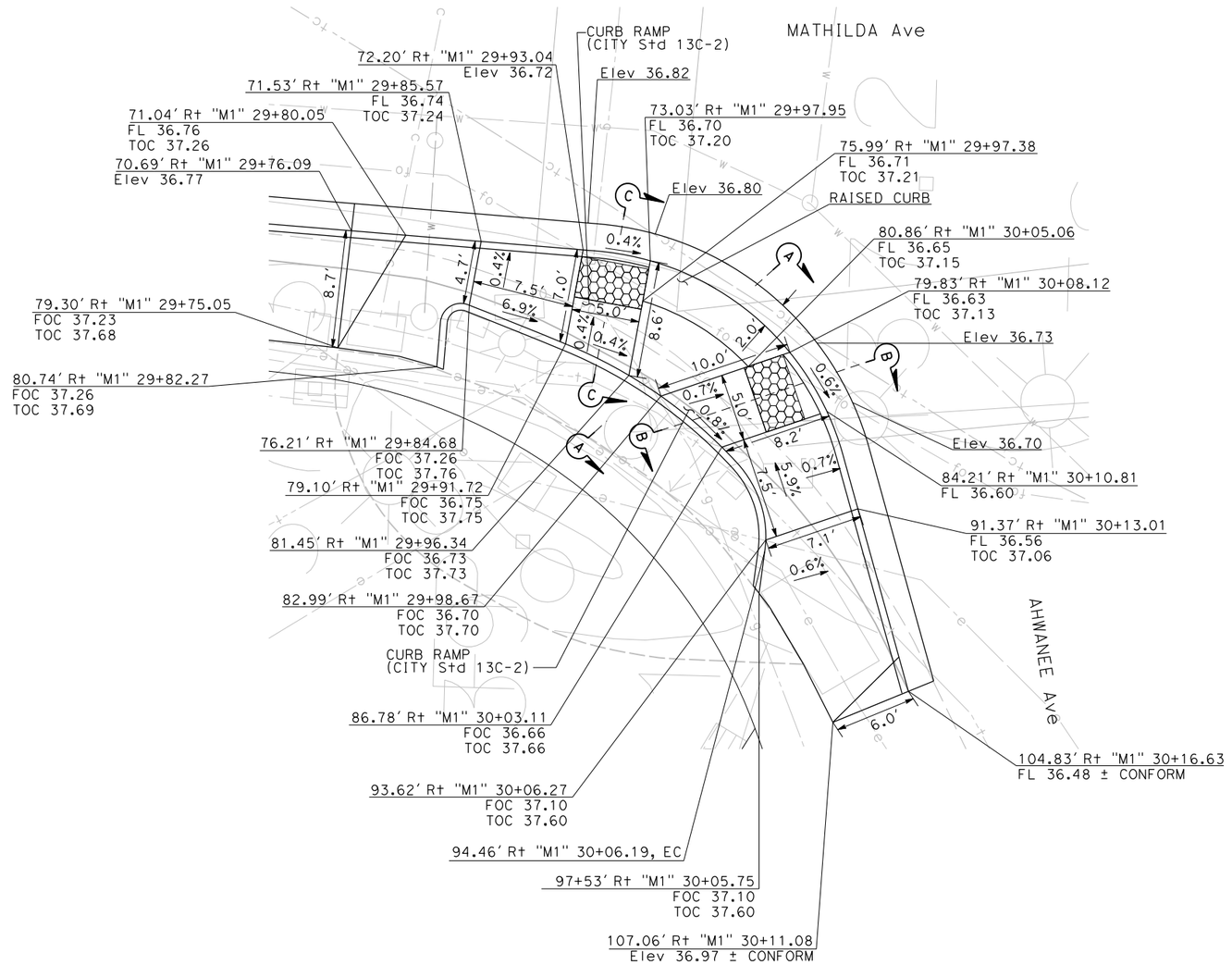

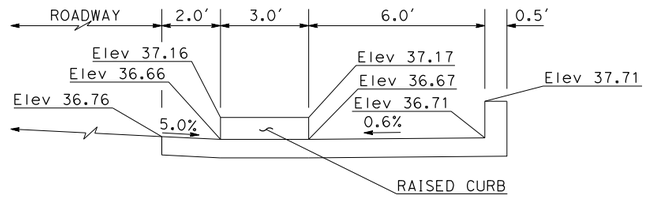

SECTION A-A
NOT TO SCALE

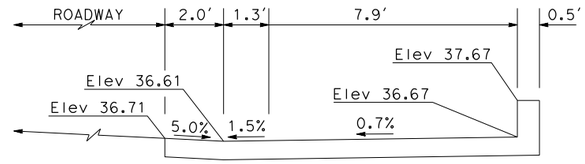

SECTION B-B
NOT TO SCALE

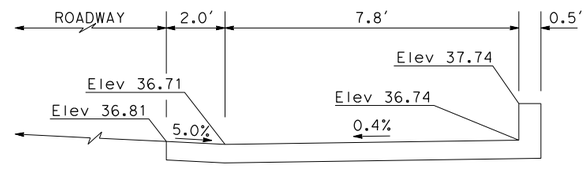

SECTION C-C
NOT TO SCALE

CONSTRUCTION DETAILS
CURB RAMPS

6-20-18

SCALE: 1" = 5′

C-38

STATE OF CALIFORNIA - DEPARTMENT OF TRANSPORTATION
Caltrans

CONSULTANT FUNCTIONAL SUPERVISOR: TIMOTHY J. LEE
CALCULATED-DESIGNED BY: SHAWN VOGTMAN
CHECKED BY: STEVE LOUPE
REVISED BY: SCV
DATE REVISED: 01/15/18

LAST REVISION
DATE PLOTTED => 6/20/2018
TIME PLOTTED => 11:04:43 AM

X:\237_101_Mathilda\000_CAD\Sheets\GA-Const_Details\0413000204ga038.dgn

BORDER LAST REVISED 7/2/2010 | USERNAME => Eilif | DGN FILE => 0413000204ga038.dgn | RELATIVE BORDER SCALE IS IN INCHES 0 1 2 3 | UNIT 0000 | PROJECT NUMBER & PHASE 0413000204

NOTE: FOR ACCURATE RIGHT OF WAY DATA, CONTACT RIGHT OF WAY ENGINEERING AT THE DISTRICT OFFICE.

Dist	COUNTY	ROUTE	POST MILES TOTAL PROJECT	SHEET No.	TOTAL SHEETS
04	SCL	101,237	45.2/45.8, 2.7/3.3	69	736

REGISTERED CIVIL ENGINEER 6-13-18 DATE

6-20-18
PLANS APPROVAL DATE

REGISTERED PROFESSIONAL ENGINEER STEVE LOUPE No. 63575 Exp. 9/30/18 CIVIL STATE OF CALIFORNIA

THE STATE OF CALIFORNIA OR ITS OFFICERS OR AGENTS SHALL NOT BE RESPONSIBLE FOR THE ACCURACY OR COMPLETENESS OF SCANNED COPIES OF THIS PLAN SHEET.

WMH CORPORATION
50 W San Fernando St
Suite 950
San Jose, CA 95113

VTA
3331 N First St
Building B
San Jose, Ca 95134

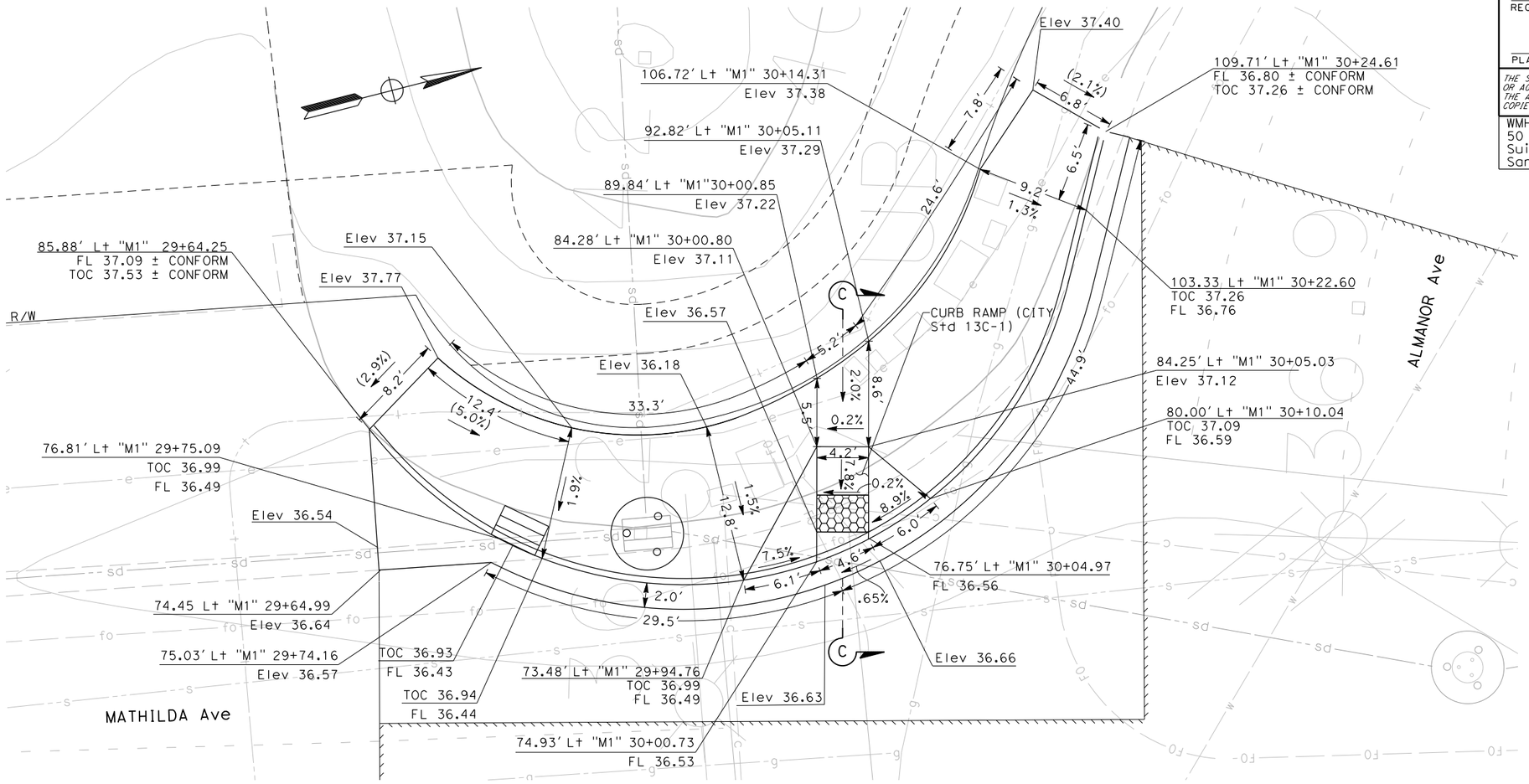

SECTION C-C
NO SCALE

CONSTRUCTION DETAILS
CURB RAMPS
SCALE: 1" = 5'

C-39

STATE OF CALIFORNIA - DEPARTMENT OF TRANSPORTATION
Caltrans

CONSULTANT FUNCTIONAL SUPERVISOR: TIMOTHY J. LEE
CALCULATED-DESIGNED BY: SHAWN VOGTMAN
CHECKED BY: STEVE LOUPE
REVISED BY: SCV
DATE REVISED: 01/15/18

X:\237_101_Mathilda\000_CAD\Sheets\GA-Const_Details\0413000204ga039.dgn

LAST REVISION 01-15-18
DATE PLOTTED => 6/20/2018
TIME PLOTTED => 11:04:45 AM

BORDER LAST REVISED 7/2/2010
USERNAME => Eilif
DGN FILE => 0413000204ga039.dgn
RELATIVE BORDER SCALE IS IN INCHES 0 1 2 3
UNIT 0000
PROJECT NUMBER & PHASE 0413000204

NOTE: FOR ACCURATE RIGHT OF WAY DATA, CONTACT
RIGHT OF WAY ENGINEERING AT THE DISTRICT OFFICE.

Dist	COUNTY	ROUTE	POST MILES TOTAL PROJECT	SHEET No.	TOTAL SHEETS
04	SCL	101,237	45.2/45.8, 2.7/3.3	70	736

REGISTERED CIVIL ENGINEER — 6-13-18 DATE

6-20-18
PLANS APPROVAL DATE

STEVE LOUPE No. 63575 Exp. 9/30/18 CIVIL — REGISTERED PROFESSIONAL ENGINEER — STATE OF CALIFORNIA

THE STATE OF CALIFORNIA OR ITS OFFICERS OR AGENTS SHALL NOT BE RESPONSIBLE FOR THE ACCURACY OR COMPLETENESS OF SCANNED COPIES OF THIS PLAN SHEET.

WMH CORPORATION 50 W San Fernando St Suite 950 San Jose, CA 95113	VTA 3331 N First St Building B San Jose, Ca 95134

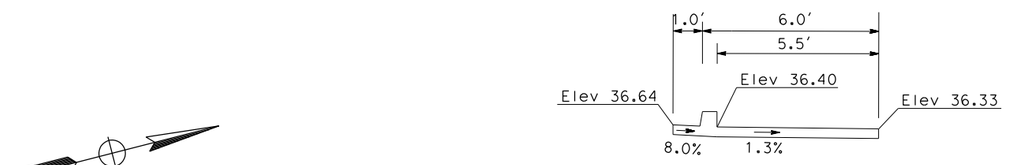

SECTION A-A
NOT TO SCALE

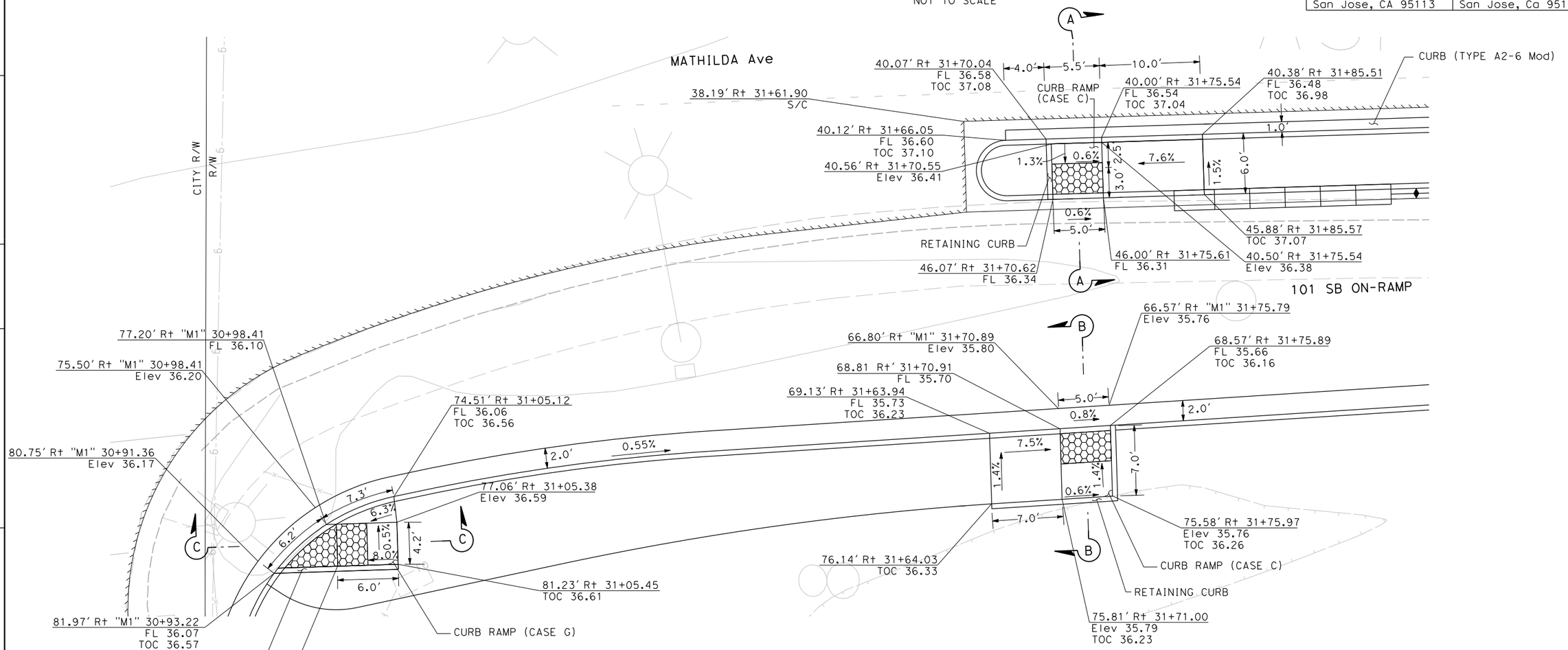

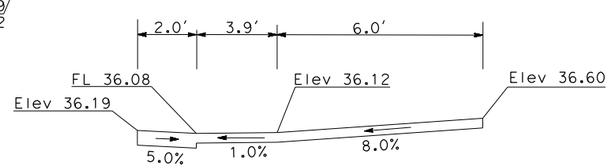

SECTION C-C
NOT TO SCALE

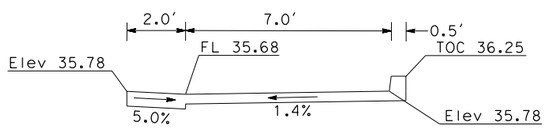

SECTION B-B
NOT TO SCALE

CONSTRUCTION DETAILS
CURB RAMPS
SCALE: 1" = 5'

C-40

CALCULATED-DESIGNED BY: JOYCE RUSHTON
CHECKED BY: STEVE LOUPE
CONSULTANT FUNCTIONAL SUPERVISOR: TIMOTHY J. LEE
STATE OF CALIFORNIA - DEPARTMENT OF TRANSPORTATION
Caltrans

REVISED BY	DATE REVISED
SCV	01/15/18

LAST REVISION: 01-15-18
DATE PLOTTED => 6/20/2018
TIME PLOTTED => 11:04:46 AM

X:\237_101_Mathilda\000_CAD\Sheets\VGA-Const_Details\0413000204ga040.dgn

BORDER LAST REVISED 7/2/2010 | USERNAME => Eilif | DGN FILE => 0413000204ga040.dgn | RELATIVE BORDER SCALE IS IN INCHES 0 1 2 3 | UNIT 0000 | PROJECT NUMBER & PHASE 0413000204

NOTE: FOR ACCURATE RIGHT OF WAY DATA, CONTACT
RIGHT OF WAY ENGINEERING AT THE DISTRICT OFFICE.

Dist	COUNTY	ROUTE	POST MILES TOTAL PROJECT	SHEET No.	TOTAL SHEETS
04	SCL	101,237	45.2/45.8, 2.7/3.3	71	736

6-13-18
REGISTERED CIVIL ENGINEER DATE

STEVE LOUPE No. 63575 Exp. 9/30/20 CIVIL — REGISTERED PROFESSIONAL ENGINEER — STATE OF CALIFORNIA

6-20-18
PLANS APPROVAL DATE

THE STATE OF CALIFORNIA OR ITS OFFICERS OR AGENTS SHALL NOT BE RESPONSIBLE FOR THE ACCURACY OR COMPLETENESS OF SCANNED COPIES OF THIS PLAN SHEET.

WMH CORPORATION
50 W San Fernando St
Suite 950
San Jose, CA 95113

VTA
3331 N First St
Building B
San Jose, Ca 95134

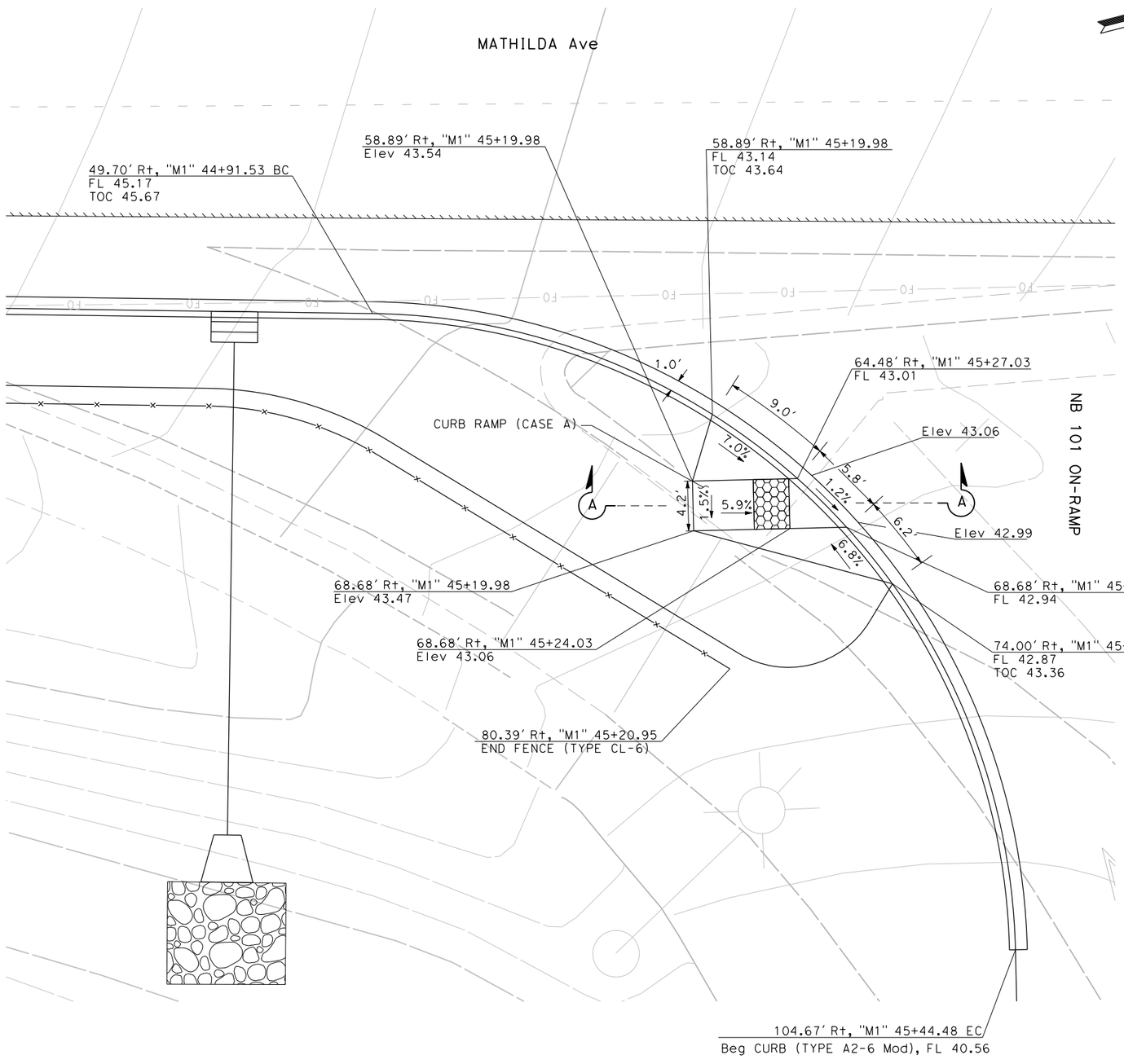

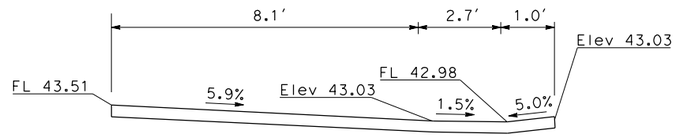

SECTION A-A
NO SCALE

CONSTRUCTION DETAILS
CURB RAMPS
SCALE: 1" = 5′

C-41

CALCULATED-DESIGNED BY	SHAWN VOGTMAN	REVISED BY	SCV
CHECKED BY	STEVE LOUPE	DATE REVISED	01/15/18
CONSULTANT FUNCTIONAL SUPERVISOR	TIMOTHY J. LEE		

STATE OF CALIFORNIA - DEPARTMENT OF TRANSPORTATION

x:\237_101_Mathilda\000_CAD\Sheets\000_Submittals\Conformed Plans\0413000204ga041.dgn

LAST REVISION 01-15-18 | DATE PLOTTED => 12/3/2018 | TIME PLOTTED => 12:21:07 PM

BORDER LAST REVISED 7/2/2010 | USERNAME => eilif | DGN FILE => 0413000204ga041.dgn | RELATIVE BORDER SCALE IS IN INCHES 0 1 2 3 | UNIT 0000 | PROJECT NUMBER & PHASE 0413000204

NOTE: FOR ACCURATE RIGHT OF WAY DATA, CONTACT
RIGHT OF WAY ENGINEERING AT THE DISTRICT OFFICE.

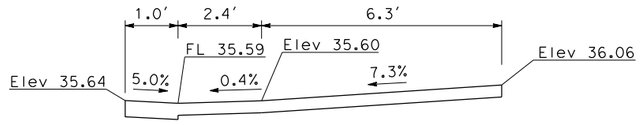

SECTION A-A
NO SCALE

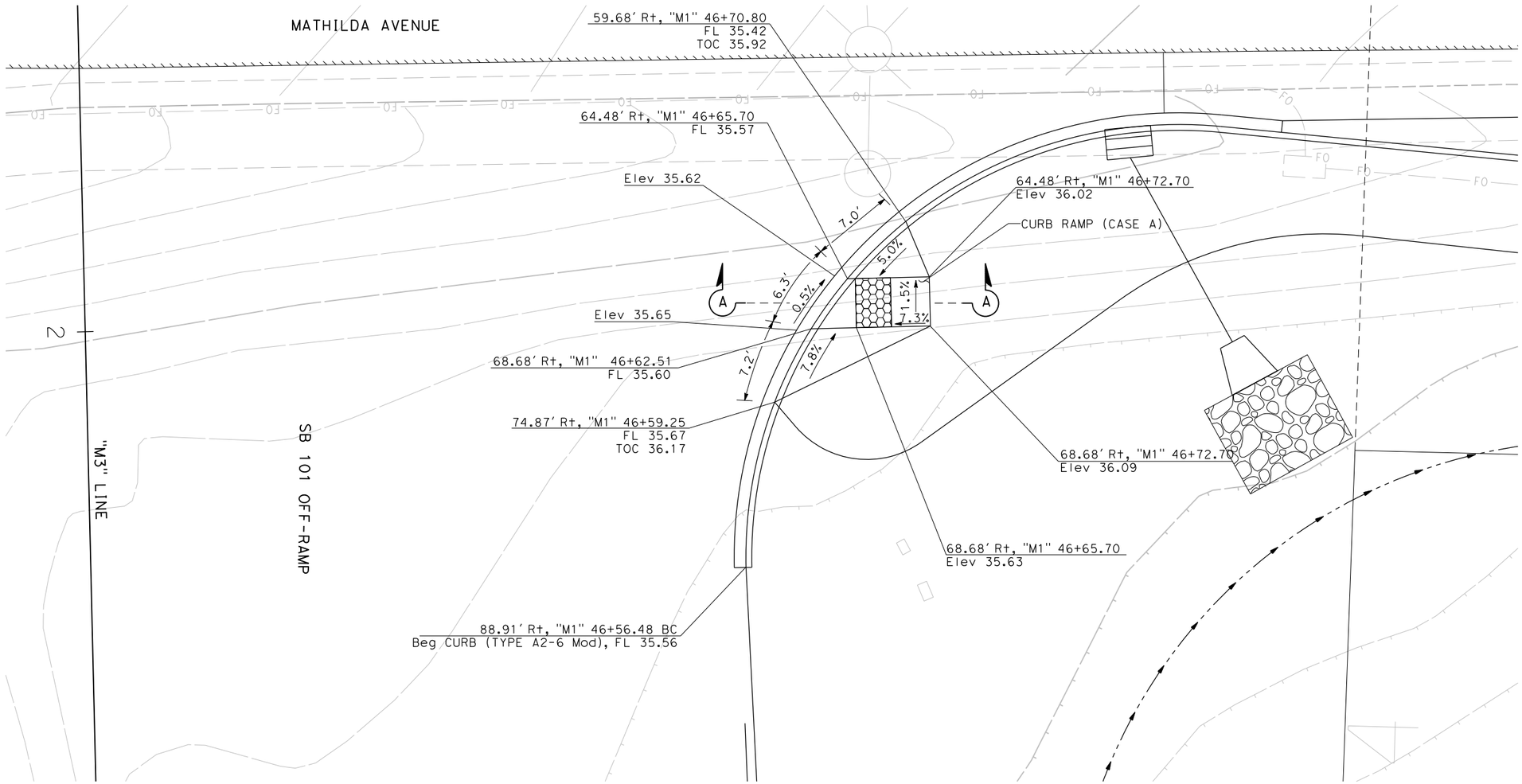

Dist	COUNTY	ROUTE	POST MILES TOTAL PROJECT	SHEET No.	TOTAL SHEETS
04	SCL	101,237	45.2/45.8, 2.7/3.3	72	736

REGISTERED CIVIL ENGINEER — 6-13-18 DATE

6-20-18
PLANS APPROVAL DATE

REGISTERED PROFESSIONAL ENGINEER
STEVE LOUPE
No. 63575
Exp. 9/30/18
CIVIL
STATE OF CALIFORNIA

THE STATE OF CALIFORNIA OR ITS OFFICERS OR AGENTS SHALL NOT BE RESPONSIBLE FOR THE ACCURACY OR COMPLETENESS OF SCANNED COPIES OF THIS PLAN SHEET.

WMH CORPORATION 50 W San Fernando St Suite 950 San Jose, CA 95113	VTA 3331 N First St Building B San Jose, Ca 95134

REVISED BY	DATE REVISED
SCV	01/15/18

CALCULATED-DESIGNED BY: SHAWN VOGTMAN
CHECKED BY: STEVE LOUPE
CONSULTANT FUNCTIONAL SUPERVISOR: TIMOTHY J. LEE

STATE OF CALIFORNIA - DEPARTMENT OF TRANSPORTATION
Caltrans

X:\237_101_Mathilda\000_CAD\Sheets\VGA-Const_Details\0413000204ga042.dgn

CONSTRUCTION DETAILS
CURB RAMPS
SCALE: 1" = 5'

C-42

LAST REVISION: DATE PLOTTED => 6/20/2018
01-15-18 TIME PLOTTED => 11:04:50 AM

BORDER LAST REVISED 7/2/2010 | USERNAME => Eilif
DGN FILE => 0413000204ga042.dgn | RELATIVE BORDER SCALE IS IN INCHES 0 1 2 3 | UNIT 0000 | PROJECT NUMBER & PHASE 0413000204

NOTE: FOR ACCURATE RIGHT OF WAY DATA, CONTACT
RIGHT OF WAY ENGINEERING AT THE DISTRICT OFFICE.

Dist	COUNTY	ROUTE	POST MILES TOTAL PROJECT	SHEET No.	TOTAL SHEETS
04	SCL	101,237	45.2/45.8, 2.7/3.3	73	736

REGISTERED CIVIL ENGINEER — 6-13-18 DATE

6-20-18
PLANS APPROVAL DATE

REGISTERED PROFESSIONAL ENGINEER — STEVE LOUPE — No. 63575 — Exp. 9/30/18 — CIVIL — STATE OF CALIFORNIA

THE STATE OF CALIFORNIA OR ITS OFFICERS OR AGENTS SHALL NOT BE RESPONSIBLE FOR THE ACCURACY OR COMPLETENESS OF SCANNED COPIES OF THIS PLAN SHEET.

WMH CORPORATION 50 W San Fernando St Suite 950 San Jose, CA 95113	VTA 3331 N First St Building B San Jose, Ca 95134

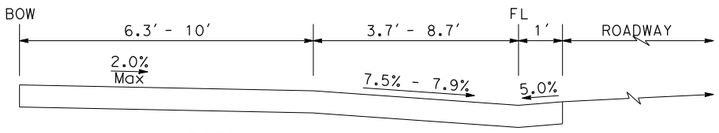

SECTION A-A
NOT TO SCALE

SECTION B-B
NOT TO SCALE

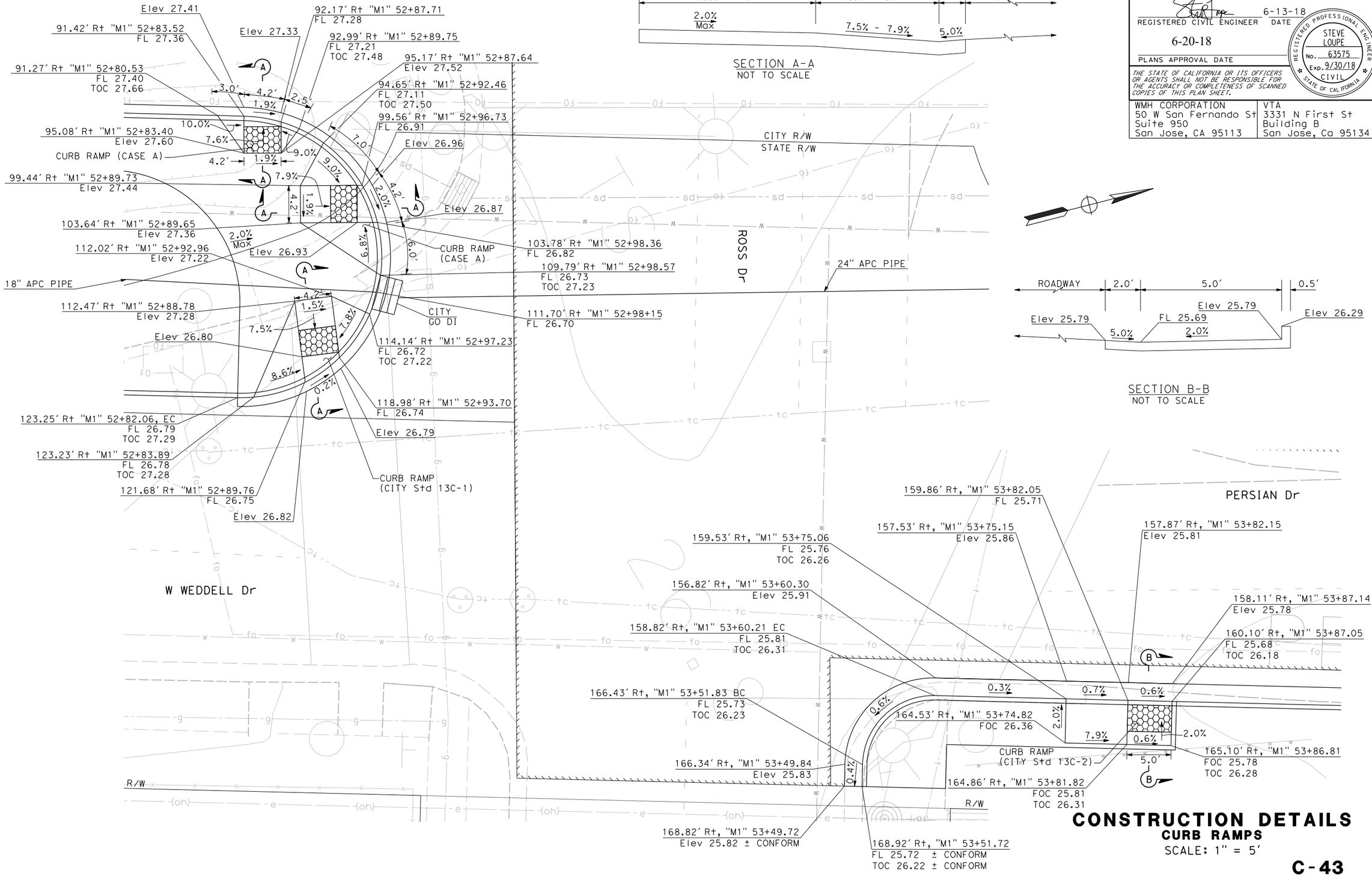

CONSTRUCTION DETAILS
CURB RAMPS
SCALE: 1" = 5'

C-43

REVISED BY	DATE REVISED
SCV	01/15/18

CALCULATED-DESIGNED BY: SHAWN VOGTMAN
CHECKED BY: STEVE LOUPE
CONSULTANT FUNCTIONAL SUPERVISOR: TIMOTHY J. LEE

STATE OF CALIFORNIA - DEPARTMENT OF TRANSPORTATION

Gb Galtars

X:\237_101_Mathilda\000_CAD\Sheets\GA-Const Details\0413000204ga043.dgn

LAST REVISION: 01-15-18
DATE PLOTTED => 6/20/2018
TIME PLOTTED => 11:04:52 AM

BORDER LAST REVISED 7/2/2010 | USERNAME => Eilif | DGN FILE => 0413000204ga043.dgn | RELATIVE BORDER SCALE IS IN INCHES 0 1 2 3 | UNIT 0000 | PROJECT NUMBER & PHASE 0413000204

NOTE: FOR ACCURATE RIGHT OF WAY DATA, CONTACT RIGHT OF WAY ENGINEERING AT THE DISTRICT OFFICE.

Dist	COUNTY	ROUTE	POST MILES TOTAL PROJECT	SHEET No.	TOTAL SHEETS
04	SCL	101,237	45.2/45.8, 2.7/3.3	74	736

REGISTERED CIVIL ENGINEER 6-13-18 DATE

6-20-18
PLANS APPROVAL DATE

REGISTERED PROFESSIONAL ENGINEER STEVE LOUPE No. 63575 Exp. 9/30/20 CIVIL STATE OF CALIFORNIA

THE STATE OF CALIFORNIA OR ITS OFFICERS OR AGENTS SHALL NOT BE RESPONSIBLE FOR THE ACCURACY OR COMPLETENESS OF SCANNED COPIES OF THIS PLAN SHEET.

WMH CORPORATION
50 W San Fernando St
Suite 950
San Jose, CA 95113

VTA
3331 N First St
Building B
San Jose, Ca 95134

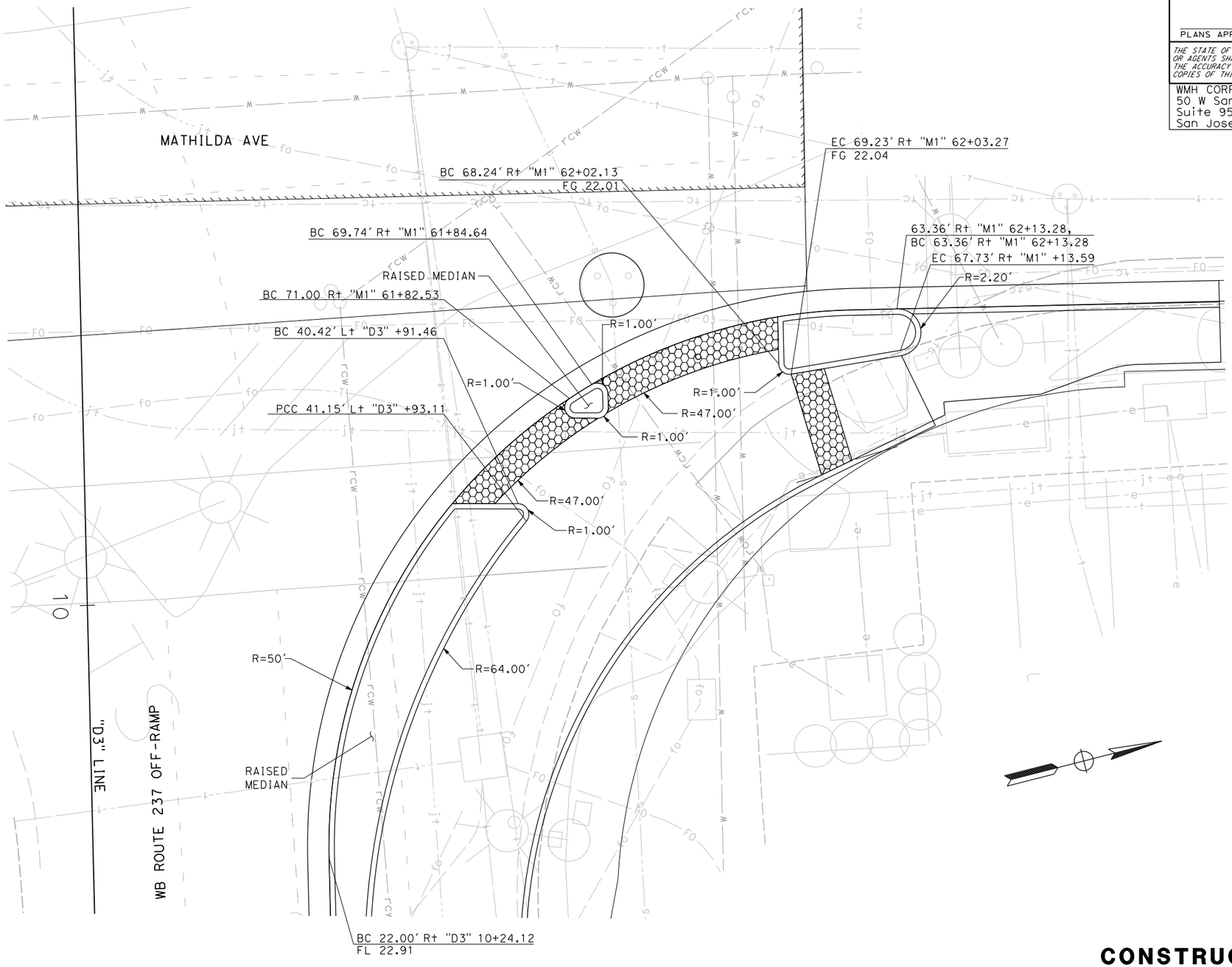

CONSTRUCTION DETAILS
RAISED MEDIAN DETAILS
SCALE: 1" = 5'

C-44

STATE OF CALIFORNIA - DEPARTMENT OF TRANSPORTATION
Caltrans
CONSULTANT FUNCTIONAL SUPERVISOR: TIMOTHY J. LEE
CALCULATED-DESIGNED BY: SHAWN VOGTMAN
CHECKED BY: STEVE LOUPE
REVISED BY: SCV
DATE REVISED: 01/15/18

X:\237_101_Mathilda\000_CAD\Sheets\000_Submittals\Conformed Plans\0413000204ga044.dgn

LAST REVISION 01-15-18
DATE PLOTTED => 12/3/2018
TIME PLOTTED => 12:21:08 PM

NOTE: FOR ACCURATE RIGHT OF WAY DATA, CONTACT
RIGHT OF WAY ENGINEERING AT THE DISTRICT OFFICE.

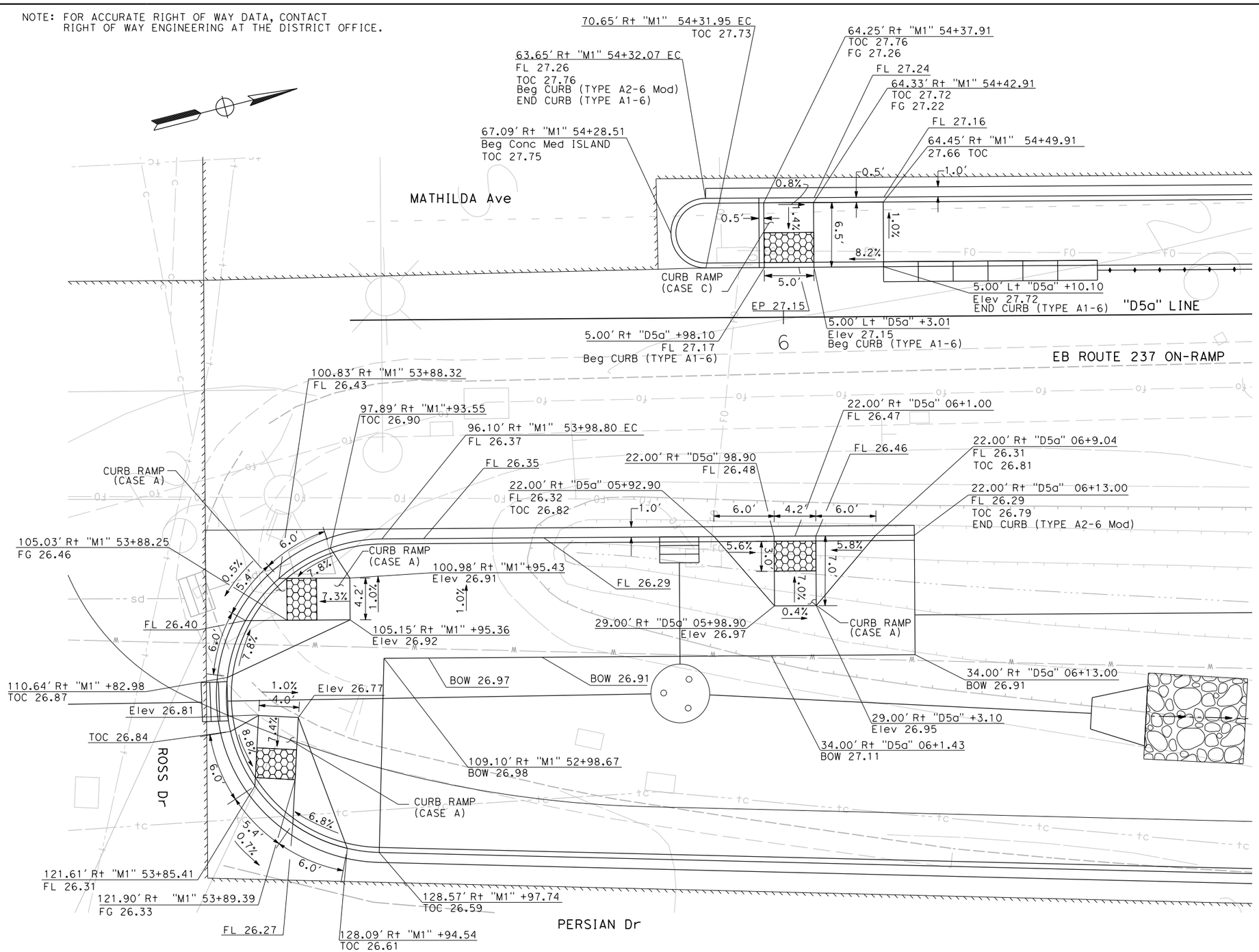

Dist	COUNTY	ROUTE	POST MILES TOTAL PROJECT	SHEET No.	TOTAL SHEETS
04	SCL	101,237	45.2/45.8, 2.7/3.3	75	736

6-13-18
REGISTERED CIVIL ENGINEER DATE

STEVE LOUPE No. 63575 Exp. 9/30/20 CIVIL — REGISTERED PROFESSIONAL ENGINEER — STATE OF CALIFORNIA

6-20-18
PLANS APPROVAL DATE

THE STATE OF CALIFORNIA OR ITS OFFICERS OR AGENTS SHALL NOT BE RESPONSIBLE FOR THE ACCURACY OR COMPLETENESS OF SCANNED COPIES OF THIS PLAN SHEET.

WMH CORPORATION
50 W San Fernando St
Suite 950
San Jose, CA 95113

VTA
3331 N First St
Building B
San Jose, Ca 95134

CALCULATED-DESIGNED BY	SHAWN VOGTMAN	REVISED BY	SCV
CHECKED BY	STEVE LOUPE	DATE REVISED	01/15/18
			EF 09/21/18

STATE OF CALIFORNIA - DEPARTMENT OF TRANSPORTATION
CONSULTANT FUNCTIONAL SUPERVISOR: TIMOTHY J. LEE

CONSTRUCTION DETAILS
CURB RAMPS
SCALE: 1" = 5'

C-45

LAST REVISION 01-15-18 DATE PLOTTED => 12/3/2018 TIME PLOTTED => 12:21:09 PM

X:\237_101_Mathilda\000_CAD\Sheets\000_Submittals\Conformed Plans\0413000204ga045.dgn

BORDER LAST REVISED 7/2/2010	USERNAME => eilif DGN FILE => 0413000204ga045.dgn	RELATIVE BORDER SCALE IS IN INCHES 0 1 2 3	UNIT 0000	PROJECT NUMBER & PHASE 0413000204

NOTE: FOR ACCURATE RIGHT OF WAY DATA, CONTACT RIGHT OF WAY ENGINEERING AT THE DISTRICT OFFICE.

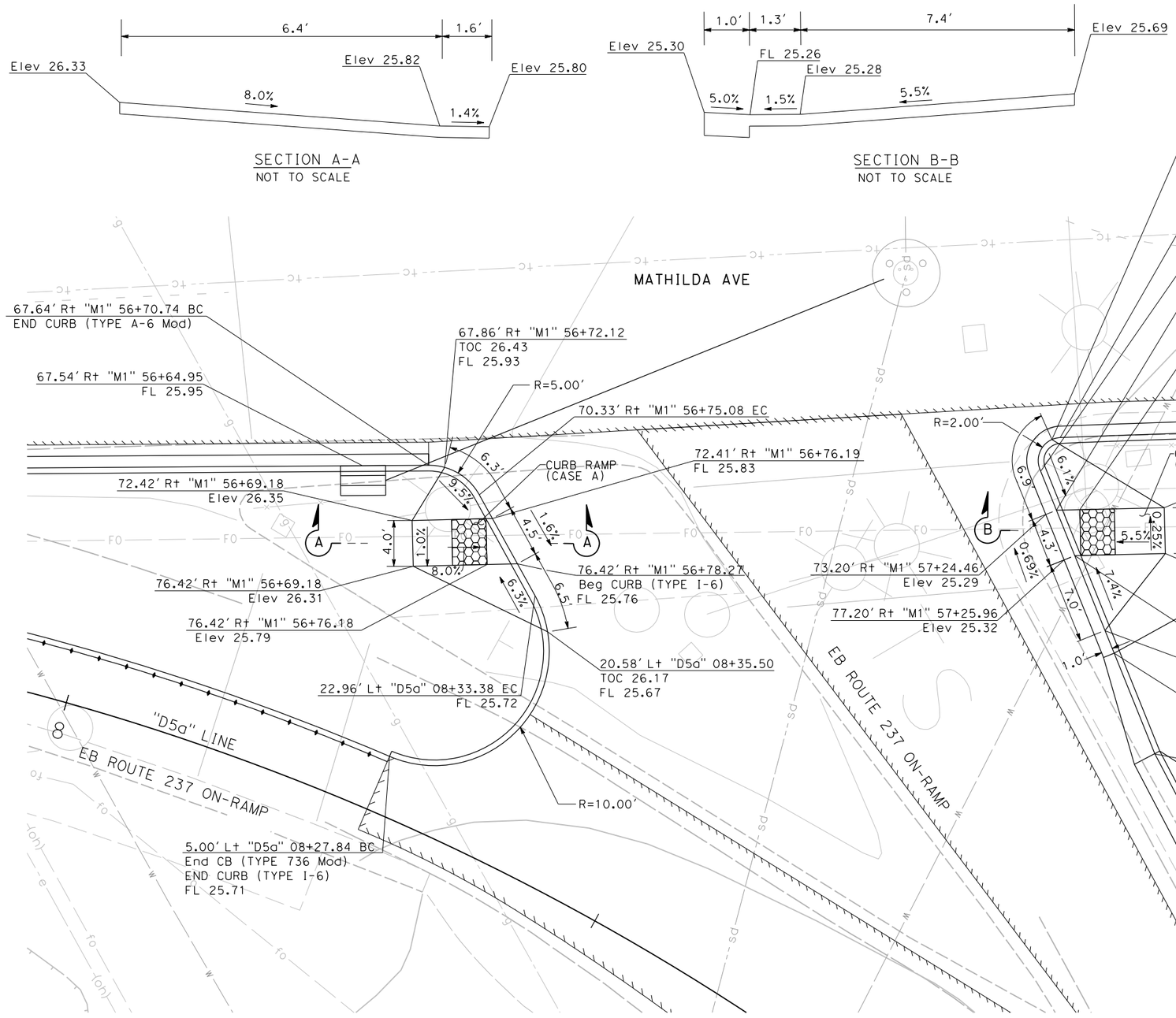

Dist	COUNTY	ROUTE	POST MILES TOTAL PROJECT	SHEET No.	TOTAL SHEETS
04	SCL	101,237	45.2/45.8, 2.7/3.3	76	736

REGISTERED CIVIL ENGINEER 6-13-18 DATE

PLANS APPROVAL DATE 6-20-18

REGISTERED PROFESSIONAL ENGINEER STEVE LOUPE No. 63575 Exp. 9/30/20 CIVIL STATE OF CALIFORNIA

THE STATE OF CALIFORNIA OR ITS OFFICERS OR AGENTS SHALL NOT BE RESPONSIBLE FOR THE ACCURACY OR COMPLETENESS OF SCANNED COPIES OF THIS PLAN SHEET.

WMH CORPORATION
50 W San Fernando St
Suite 950
San Jose, CA 95113

VTA
3331 N First St
Building B
San Jose, Ca 95134

CONSTRUCTION DETAILS
CURB RAMPS
SCALE: 1" = 5'

C-46

STATE OF CALIFORNIA - DEPARTMENT OF TRANSPORTATION

Caltrans

CONSULTANT FUNCTIONAL SUPERVISOR: TIMOTHY J. LEE

CALCULATED-DESIGNED BY: SHAWN VOGTMAN | CHECKED BY: STEVE LOUPE

REVISED BY: SCV | DATE REVISED: 01/15/18 | EF: 09/21/18

X:\237_101_Mathilda\000_CAD\Sheets\000_Submittals\Conformed Plans\0413000204ga046.dgn

LAST REVISION 01-15-18 | DATE PLOTTED => 12/3/2018 | TIME PLOTTED => 12:21:11 PM

BORDER LAST REVISED 7/2/2010 | USERNAME => eilif | DGN FILE => 0413000204ga046.dgn | RELATIVE BORDER SCALE IS IN INCHES 0 1 2 3 | UNIT 0000 | PROJECT NUMBER & PHASE 0413000204

NOTE: FOR ACCURATE RIGHT OF WAY DATA, CONTACT
RIGHT OF WAY ENGINEERING AT THE DISTRICT OFFICE.

Dist	COUNTY	ROUTE	POST MILES TOTAL PROJECT	SHEET No.	TOTAL SHEETS
04	SCL	101,237	45.2/45.8, 2.7/3.3	77	736

6-13-18
REGISTERED CIVIL ENGINEER DATE

STEVE LOUPE No. 63575 Exp. 9/30/20 CIVIL — REGISTERED PROFESSIONAL ENGINEER — STATE OF CALIFORNIA

6-20-18
PLANS APPROVAL DATE

THE STATE OF CALIFORNIA OR ITS OFFICERS OR AGENTS SHALL NOT BE RESPONSIBLE FOR THE ACCURACY OR COMPLETENESS OF SCANNED COPIES OF THIS PLAN SHEET.

WMH CORPORATION
50 W San Fernando St
Suite 950
San Jose, CA 95113

VTA
3331 N First St
Building B
San Jose, Ca 95134

MATHILDA AVE

66.42′ Rt "M1" 61+07.03 BC
FL 22.54
TOC 23.04

35.00′ Rt "D3" +83.56
FG 23.20

R=2.00′

28.00′ Rt "D3" 09+79.18
FL 22.58
TOC 23.08

CURB RAMP
(CASE A)

EC 28.00′ Rt "D3" 09+79.18
FL 22.60

73.48′ Lt "M1" 29+94.76
FL 22.68

Elev 22.73

6.8%
5.8′
1.9%
4.2
8.0%
7.0′
0.7%

28.00′ Rt "D3" 09+85.66
RAMP CASE A
Elev 22.81

R=5.50′

9.4%
6.4′

28.00′ Lt "M1" 09+87.76
FL 22.76

35.00′ Rt
"D3"+87.76
FG 23.28

28.00′ Rt "D3" +93.76
FL 22.86
TOC 23.36

28.00′ Rt "D3" 09+94.19
FL 22.87
END CURB (TYPE A2-6)

28.00′ Rt "D3" 10+00.00
FL 22.97

"D3" LINE

WB ROUTE 237 OFF-RAMP

BC 68.24′ Rt "M1" 62+02.13
FG 22.01

BC 69.74′ Rt "M1" 61+84.64
FL 22.09

FOR RAISED MEDIAN
DETAILS SEE C-43, Typ

BC 71.00 Rt "M1" 61+82.53
FL 22.13

BC 40.42′ Lt "D3" +91.46
FG 22.44

PCC 41.15′ Lt "D3" +93.11
FG 22.49

38.24′ Lt "D3" +91.40
FG 22.41

80.54′ Rt "M1" 61+71.37
FL 22.35

BIKE PATH

R=50′

RAISED
MEDIAN

BC 22.00′ Rt "D3" 10+24.12
FL 22.91

65.03′ Lt "D3" +74.60
FL 21.94

66.88′ Rt "M1" +2.13
FG 21.99

2.0′
0.80%
3.0′
1.5%
R=47.00′
1.50%
1.5%
R=47.00′
4.0′

EC 69.23′ Rt "M1" 62+03.27
FG 22.04

68.77′ Rt "M1" +6.37
FG 22.01

63.42′ Rt "M1" 62+43.37
Beg CURB (TYPE A2-6)
FL 21.59
CONFORM

EC 63.36′ Rt "M1" 62+09.18
FL 21.86

63.36′ Rt "M1" 62+13.28, FL 21.81
BC 63.36′ Rt "M1" 62+13.28, R=2.2′

EC 67.73′ Rt "M1" +13.59

69.06′ Rt "M1" 62+43.38
CONFORM

EC 69.07′ Rt "M1" 62+35.71

BC 69.60′ Rt "M1" 62+32.50
R=10.00′

3.1′
3.3%
8.9′
9.8′

71.64′ Rt "M1" 62+26.51

72.15′ Rt "M1" 62+17.45

73.87′ Rt "M1" 62+16.40
FG 22.47

CURB RAMP
(CASE F)

77.38′ Rt "M1" 62+8.75
FG 22.19

BC 78.69′ Rt "M1" 62+05.89
FG 22.24, R=50.0′

EC 70.62′ Rt "M1" 61+86.13
FG 22.19

EC 71.90′ Rt "M1" 61+86.13
FG 22.22

BC 72.90′ Rt "M1" 61+85.10
FG 22.24

EC 72.85′ Rt "M1" 61+83.03
FG 22.25

CONSTRUCTION DETAILS
CURB RAMPS
SCALE: 1" = 5′

C-47

REVISED BY	DATE REVISED
SCV	01/15/18

CALCULATED-DESIGNED BY: SHAWN VOGTMAN
CHECKED BY: STEVE LOUPE
SUPERVISOR: TIMOTHY J. LEE
CONSULTANT FUNCTIONAL SUPERVISOR

STATE OF CALIFORNIA - DEPARTMENT OF TRANSPORTATION
Caltrans

X:\237_101_Mathilda\000_CAD\Sheets\000_Submittals\Conformed Plans\0413000204ga047.dgn

LAST REVISION 01-15-18
DATE PLOTTED => 12/3/2018
TIME PLOTTED => 12:21:12 PM

BORDER LAST REVISED 7/2/2010 | USERNAME => eilif | DGN FILE => 0413000204ga047.dgn | RELATIVE BORDER SCALE IS IN INCHES 0 1 2 3 | UNIT 0000 | PROJECT NUMBER & PHASE 0413000204

NOTE: FOR ACCURATE RIGHT OF WAY DATA, CONTACT RIGHT OF WAY ENGINEERING AT THE DISTRICT OFFICE.

66.70' Lt "L6" 161+02.6
EP 23.91 (TOC 25.40)
BEGIN RAMP

70.83' Lt "L6" 161+13.8
EP 23.40, TOC 23.90 (TOC 25.33)
END RAMP

EC 44.59' Lt "M1" 62+39.35
FG 22.47
END RAMP
END CURB (A1-6)

EC 47.21' Lt "M1" 62+09.29
FG 22.98
BEGIN CURB (A1-6)

46.00' Lt "M1" 62+33.51
FG 22.69
BEGIN RAMP

BC 47.46' Lt "M1" 62+07.75
FG 23.00, R=5.00'

EC 47.02' Lt "M1" 62+29.51
FG 22.71, R=5.00'

BC 47.18' Lt "M1" 62+28.28
FG 22.74

4.1%

PCC 51.07' Lt "L6" +20.80
TOC 23.52, FG 23.10
END RAMP

EC 37.11' Lt "M1" +87.40
FG 22.90

EC 40.15' Lt "M1" +85.07
FG 22.96

42.21' Lt "M1" 62+09.29
FG 22.93
HIGH POINT

RAISED MEDIAN

RAISED MEDIAN

15.00'

1.5%

45.95' Lt "L6" +09.90
FG 23.59
BEGIN RAMP

R=1.00'

3.00'

R=2.00'

R=46.60'

45.95' Lt "L6" +09.90
FL 23.09

1.00'

BC 42.18' Lt "M1" 62+28.03
FG 22.66, R=5.00'

PCC 51.07' Lt "L6" +20.80
FL 23.02

BC 38.11' Lt "M1" +85.11
FL 22.88

BC 38.11' Lt "M1" 62+03.17
FL 22.61
A2-6 Mod CURB

EC 42.12' Lt "M1" 62+28.52
FG 22.64

EC 41.16' Lt "M1" 62+32.27
FG 22.61
BEGIN RAMP

EC 39.70' Lt "M1" 62+38.29
FG 22.39
END RAMP

38.11' Lt "M1" 62+48.49
FL 21.78, TOC 22.28

MATHILDA AVE

"L6" LINE

"M1" LINE

"D.3" LINE

161

2

EC 0.39' Rt "M1" 61+95.13
FG 23.26

BC 0.39' Rt "M1" 61+94.13
FG 23.26, R=0.5'

EC 0.11' Lt "M1" 62+03.13
FG 23.26

BC 0.11' Lt "M1" 62+86.13
FG 23.27

R=0.50'

0.11' Lt "M1" 62+05.45
FG 23.28

3.00'

R=1.50'

12.05' Rt "M1" +86.13
FG 23.38
TOC 23.88

BC 1.89' Rt "M1" 62+01.13
FG 23.27, R=2.0'

0.8%

0.6%

12.15' Rt "M1" +01.13
FG 23.24
TOC 23.74

R=12.25'

24.52'

EC 22.41' Rt "M1" +01.13
FL 23.09

1.5%

1.5%

12.15' Rt "M1" +94.13
FG 23.36
TOC 23.86

6.00'

EC 24.40' Rt "M1" +86.13
FG 23.20
TOC 23.74

3.00'

R=1.50'

24.41' Rt "M1" +3.13
FG 23.01, R=2.0'
TOC 23.51

BC 23.91' Rt "M1" 61+94.13
FG 23.13, R=0.5'

24.40' Rt "M1" +94.63
FG 23.14
TOC 23.64

R=0.50'

EC 23.91' Rt "M1" 61+95.13
FG 23.12

CONSTRUCTION DETAILS

SCALE: 1" = 5'

C-48

Dist	COUNTY	ROUTE	POST MILES TOTAL PROJECT	SHEET No.	TOTAL SHEETS
04	SCL	101,237	45.2/45.8, 2.7/3.3	78	736

6-13-18
REGISTERED CIVIL ENGINEER — DATE

STEVE LOUPE No. 63575 Exp. 9/30/20 CIVIL — REGISTERED PROFESSIONAL ENGINEER — STATE OF CALIFORNIA

6-20-18
PLANS APPROVAL DATE

THE STATE OF CALIFORNIA OR ITS OFFICERS OR AGENTS SHALL NOT BE RESPONSIBLE FOR THE ACCURACY OR COMPLETENESS OF SCANNED COPIES OF THIS PLAN SHEET.

WMH CORPORATION
50 W San Fernando St
Suite 950
San Jose, CA 95113

VTA
3331 N First St
Building B
San Jose, Ca 95134

REVISED BY	DATE REVISED
SCV	01/15/18

CALCULATED-DESIGNED BY: SHAWN VOGTMAN
CHECKED BY: STEVE LOUPE
CONSULTANT FUNCTIONAL SUPERVISOR: TIMOTHY J. LEE

STATE OF CALIFORNIA - DEPARTMENT OF TRANSPORTATION
Caltrans

x:\237_101_Mathilda\000_CAD\Sheets\000_Submittals\Conformed Plans\0413000204ga048.dgn

LAST REVISION 01-15-18
DATE PLOTTED => 12/3/2018
TIME PLOTTED => 12:21:13 PM

BORDER LAST REVISED 7/2/2010 | USERNAME => eilif | DGN FILE => 0413000204ga048.dgn | RELATIVE BORDER SCALE IS IN INCHES 0 1 2 3 | UNIT 0000 | PROJECT NUMBER & PHASE 0413000204

NOTE: FOR ACCURATE RIGHT OF WAY DATA, CONTACT RIGHT OF WAY ENGINEERING AT THE DISTRICT OFFICE.

Dist	COUNTY	ROUTE	POST MILES TOTAL PROJECT	SHEET No.	TOTAL SHEETS
04	SCL	101,237	45.2/45.8, 2.7/3.3	79	736

REGISTERED CIVIL ENGINEER 6-13-18 DATE

6-20-18
PLANS APPROVAL DATE

REGISTERED PROFESSIONAL ENGINEER STEVE LOUPE No. 63575 Exp. 9/30/18 CIVIL STATE OF CALIFORNIA

THE STATE OF CALIFORNIA OR ITS OFFICERS OR AGENTS SHALL NOT BE RESPONSIBLE FOR THE ACCURACY OR COMPLETENESS OF SCANNED COPIES OF THIS PLAN SHEET.

WMH CORPORATION
50 W San Fernando St
Suite 950
San Jose, CA 95113

VTA
3331 N First St
Building B
San Jose, Ca 95134

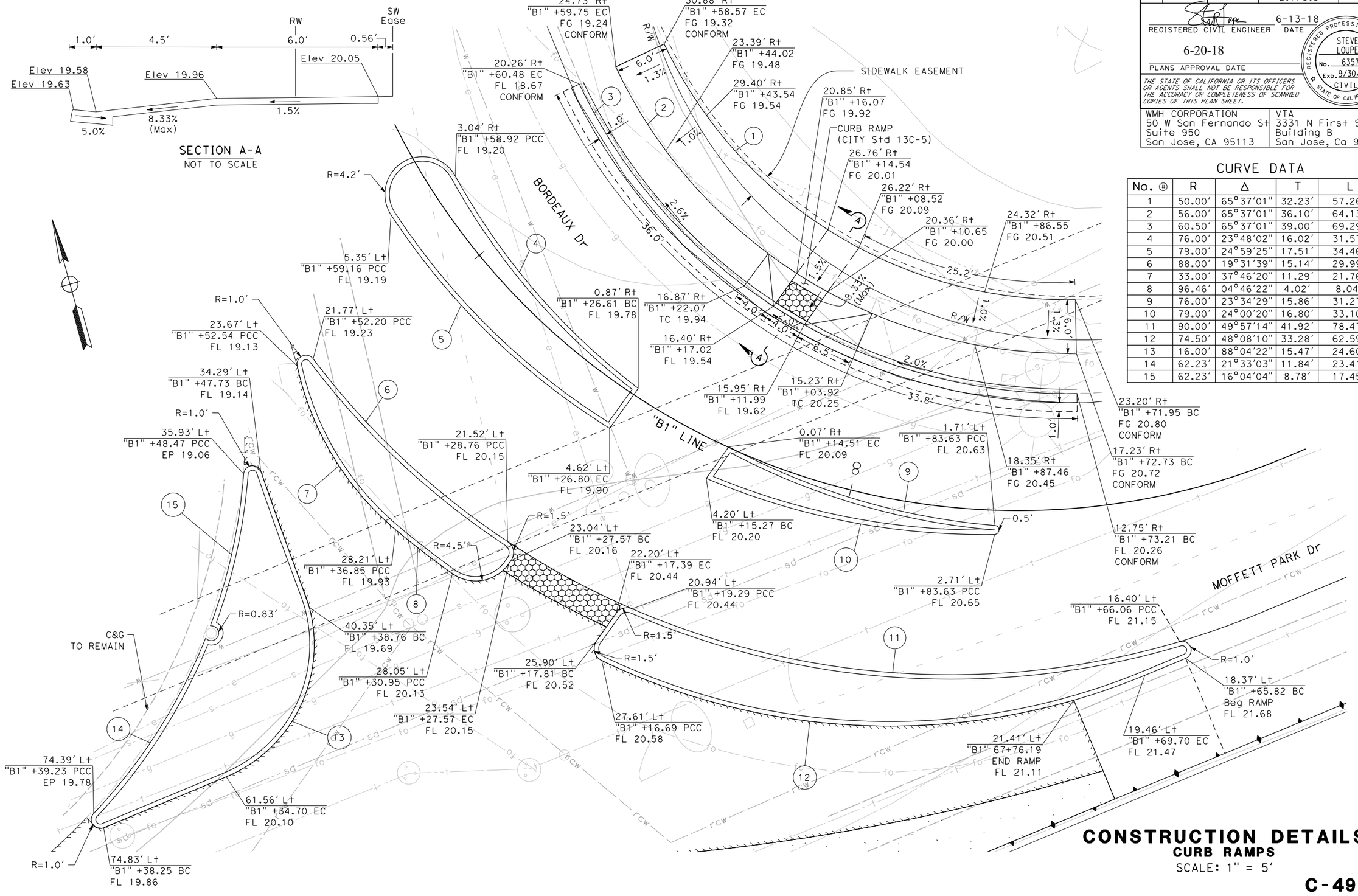

CURVE DATA

No.	R	Δ	T	L
1	50.00'	65°37'01"	32.23'	57.26'
2	56.00'	65°37'01"	36.10'	64.13'
3	60.50'	65°37'01"	39.00'	69.29'
4	76.00'	23°48'02"	16.02'	31.57'
5	79.00'	24°59'25"	17.51'	34.46'
6	88.00'	19°31'39"	15.14'	29.99'
7	33.00'	37°46'20"	11.29'	21.76'
8	96.46'	04°46'22"	4.02'	8.04'
9	76.00'	23°34'29"	15.86'	31.27'
10	79.00'	24°00'20"	16.80'	33.10'
11	90.00'	49°57'14"	41.92'	78.47'
12	74.50'	48°08'10"	33.28'	62.59'
13	16.00'	88°04'22"	15.47'	24.60'
14	62.23'	21°33'03"	11.84'	23.41'
15	62.23'	16°04'04"	8.78'	17.45'

CONSTRUCTION DETAILS
CURB RAMPS
SCALE: 1" = 5'

C-49

STATE OF CALIFORNIA - DEPARTMENT OF TRANSPORTATION
Caltrans

CONSULTANT FUNCTIONAL SUPERVISOR: TIMOTHY J. LEE
CALCULATED-DESIGNED BY: SHAWN VOGTMAN
CHECKED BY: STEVE LOUPE
REVISED BY: SCV
DATE REVISED: 01/15/18

X:\237_101_Mathilda\000_CAD\Sheets\GA-Const_Details\0413000204ga049.dgn

LAST REVISION 01-15-18
DATE PLOTTED => 6/20/2018
TIME PLOTTED => 11:05:03 AM

NOTE: FOR ACCURATE RIGHT OF WAY DATA, CONTACT
RIGHT OF WAY ENGINEERING AT THE DISTRICT OFFICE.

Dist	COUNTY	ROUTE	POST MILES TOTAL PROJECT	SHEET No.	TOTAL SHEETS
04	SCL	101,237	45.2/45.8, 2.7/3.3	80	736

REGISTERED CIVIL ENGINEER — 6-13-18 DATE

STEVE LOUPE No. 63575 Exp. 9/30/18 CIVIL — REGISTERED PROFESSIONAL ENGINEER — STATE OF CALIFORNIA

6-20-18
PLANS APPROVAL DATE

THE STATE OF CALIFORNIA OR ITS OFFICERS OR AGENTS SHALL NOT BE RESPONSIBLE FOR THE ACCURACY OR COMPLETENESS OF SCANNED COPIES OF THIS PLAN SHEET.

WMH CORPORATION
50 W San Fernando St
Suite 950
San Jose, CA 95113

VTA
3331 N First St
Building B
San Jose, Ca 95134

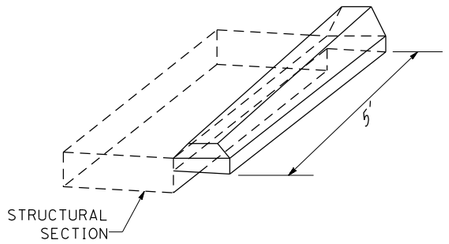

HMA DIKE TRANSITION
TYPE C TO TYPE F

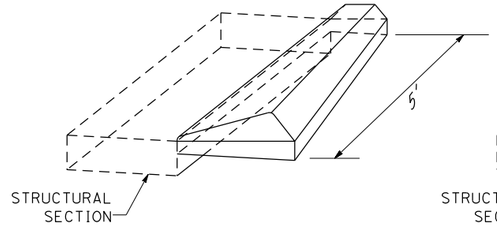

HMA DIKE TRANSITION
TYPE E TO TYPE C

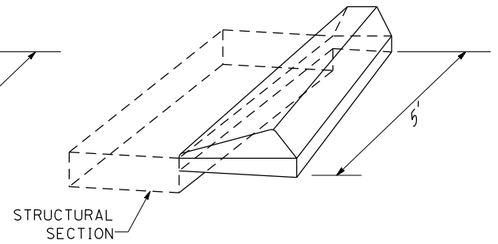

HMA DIKE TRANSITION
TYPE E TO TYPE F

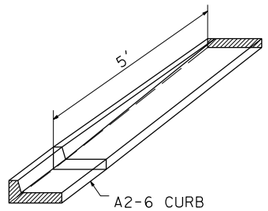

TRANSITION FROM A2-6 CURB TO ZERO HEIGHT

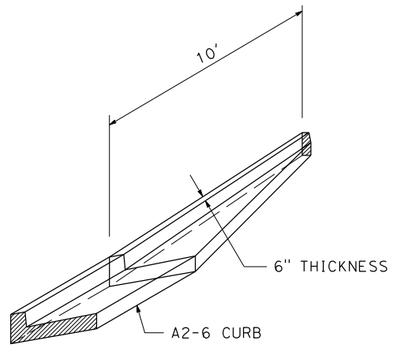

TRANSITION FROM A2-6 CURB TO A1-6 CURB

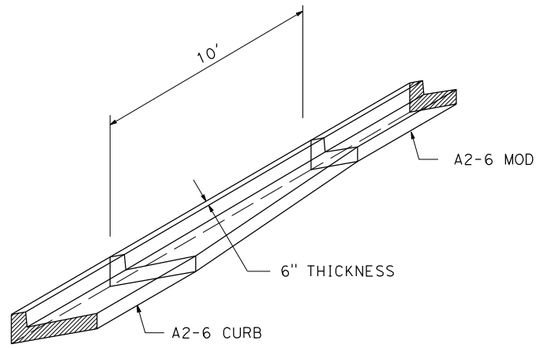

TRANSITION FROM A2-6 CURB TO A2-6 MOD CURB

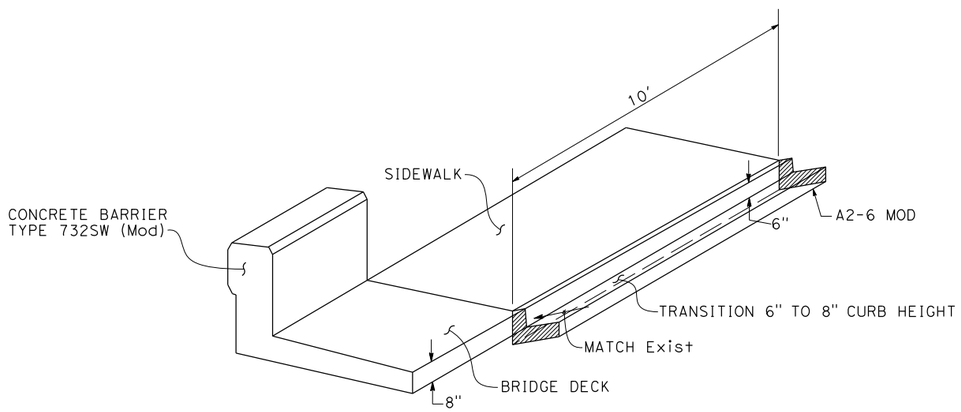

TRANSITION FROM A2-6 Mod CURB TO BRIDGE WALKWAY

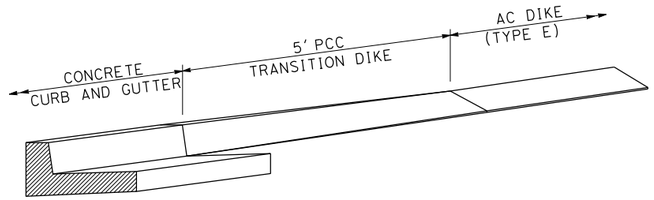

CURB TRANSITION
A2-6 CURB TO TYPE E DIKE

CONSTRUCTION DETAILS
NO SCALE

C-50

CALCULATED-DESIGNED BY	SHAWN VOGTMAN	REVISED BY	SCV
CHECKED BY	STEVE LOUPE	DATE REVISED	01/15/18

STATE OF CALIFORNIA - DEPARTMENT OF TRANSPORTATION
Caltrans
CONSULTANT FUNCTIONAL SUPERVISOR: TIMOTHY J. LEE

LAST REVISION 01-15-18
DATE PLOTTED => 6/20/2018
TIME PLOTTED => 11:05:05 AM

X:\237_101_Mathilda\000_CAD\Sheets\GA-Const_Details\0413000204ga050.dgn

BORDER LAST REVISED 7/2/2010 | USERNAME => Eilif | DGN FILE => 0413000204ga050.dgn | RELATIVE BORDER SCALE IS IN INCHES 0 1 2 3 | UNIT 0000 | PROJECT NUMBER & PHASE 0413000204

NOTES:

1. FOR CONCRETE BARRIER DETAILS NOT SHOWN SEE STANDARD PLAN A76A.
2. FOR CURB DETAILS NOT SHOWN SEE STANDARD PLAN A87A.
3. CONCRETE BARRIER TRANSITION PAID AS CONCRETE BARRIER (TYPE 60MC).

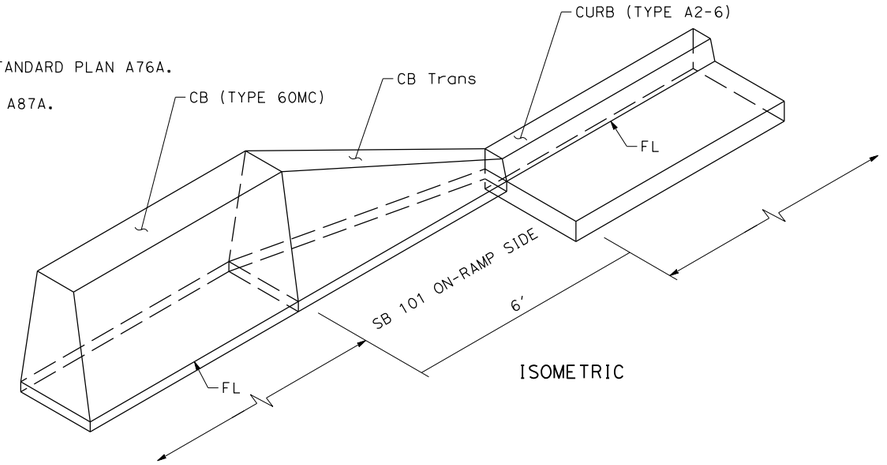

ISOMETRIC

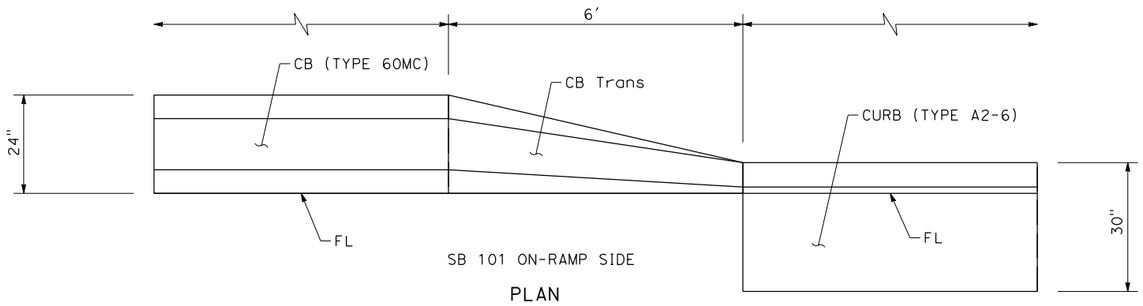

PLAN

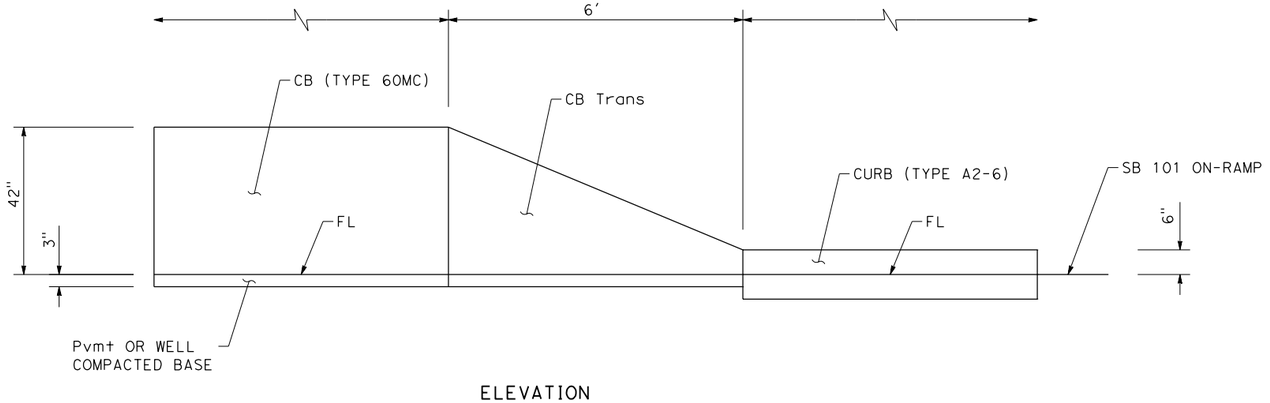

ELEVATION

CONCRETE BARRIER TRANSITION (CB TYPE 60MC TO CURB TYPE A2-6)

Dist	COUNTY	ROUTE	POST MILES TOTAL PROJECT	SHEET No.	TOTAL SHEETS
04	SCL	101,237	45.2/45.8, 2.7/3.3	81	736

6-13-18
REGISTERED CIVIL ENGINEER DATE

STEVE LOUPE No. 63575 Exp. 9/30/20 CIVIL — REGISTERED PROFESSIONAL ENGINEER — STATE OF CALIFORNIA

6-20-18
PLANS APPROVAL DATE

THE STATE OF CALIFORNIA OR ITS OFFICERS OR AGENTS SHALL NOT BE RESPONSIBLE FOR THE ACCURACY OR COMPLETENESS OF SCANNED COPIES OF THIS PLAN SHEET.

WMH CORPORATION
50 W San Fernando St
Suite 950
San Jose, CA 95113

VTA
3331 N First St
Building B
San Jose, Ca 95134

CONSTRUCTION DETAILS

NO SCALE

C-51

REVISED BY	DATE REVISED
SCV	01/15/18

CALCULATED-DESIGNED BY: SHAWN VOGTMAN
CHECKED BY: STEVE LOUPE

STATE OF CALIFORNIA - DEPARTMENT OF TRANSPORTATION
CONSULTANT FUNCTIONAL SUPERVISOR - TIMOTHY J. LEE

LAST REVISION 01-15-18
DATE PLOTTED => 12/3/2018
TIME PLOTTED => 12:21:14 PM

X:\237_101_Mathilda\000_CAD\Sheets\000_Submittals\Conformed Plans\0413000204ga051.dgn

BORDER LAST REVISED 7/2/2010
USERNAME => eilif
DGN FILE => 0413000204ga051.dgn
RELATIVE BORDER SCALE IS IN INCHES 0 1 2 3
UNIT 0000
PROJECT NUMBER & PHASE 0413000204

Dist	COUNTY	ROUTE	POST MILES TOTAL PROJECT	SHEET No.	TOTAL SHEETS
04	SCL	101,237	45.2/45.8, 2.7/3.3	82	736

REGISTERED CIVIL ENGINEER — 6-13-18 DATE

6-20-18
PLANS APPROVAL DATE

REGISTERED PROFESSIONAL ENGINEER — STEVE LOUPE — No. 63575 — Exp. 9/30/18 — CIVIL — STATE OF CALIFORNIA

THE STATE OF CALIFORNIA OR ITS OFFICERS OR AGENTS SHALL NOT BE RESPONSIBLE FOR THE ACCURACY OR COMPLETENESS OF SCANNED COPIES OF THIS PLAN SHEET.

WMH CORPORATION
50 W San Fernando St
Suite 950
San Jose, CA 95113

VTA
3331 N First St
Building B
San Jose, Ca 95134

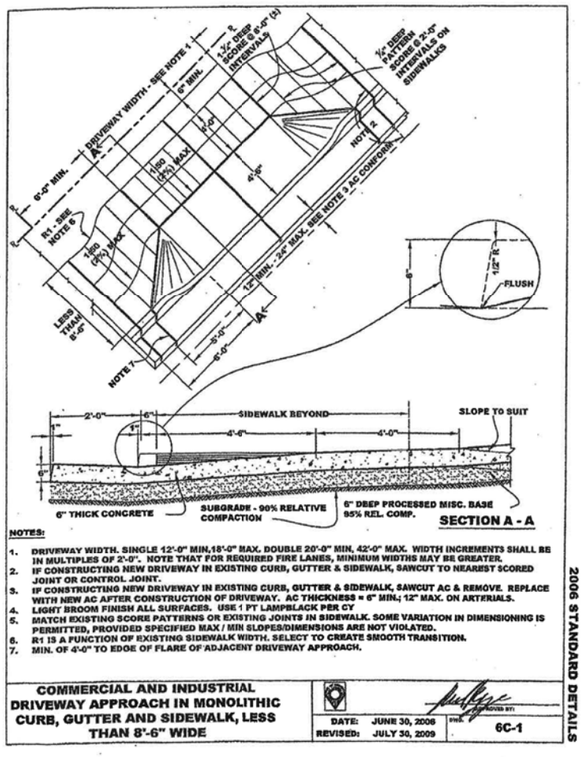

NOTES:

1. DRIVEWAY WIDTH. SINGLE 12'-0" MIN,18'-0" MAX. DOUBLE 20'-0" MIN, 42'-0" MAX. WIDTH INCREMENTS SHALL BE IN MULTIPLES OF 2'-0". NOTE THAT FOR REQUIRED FIRE LANES, MINIMUM WIDTHS MAY BE GREATER.
2. IF CONSTRUCTING NEW DRIVEWAY IN EXISTING CURB, GUTTER & SIDEWALK, SAWCUT TO NEAREST SCORED JOINT OR CONTROL JOINT.
3. IF CONSTRUCTING NEW DRIVEWAY IN EXISTING CURB, GUTTER & SIDEWALK, SAWCUT AC & REMOVE. REPLACE WITH NEW AC AFTER CONSTRUCTION OF DRIVEWAY. AC THICKNESS = 6" MIN.; 12" MAX. ON ARTERIALS.
4. LIGHT BROOM FINISH ALL SURFACES. USE 1 PT LAMPBLACK PER CY
5. MATCH EXISTING SCORE PATTERNS OR EXISTING JOINTS IN SIDEWALK. SOME VARIATION IN DIMENSIONING IS PERMITTED, PROVIDED SPECIFIED MAX / MIN SLOPES/DIMENSIONS ARE NOT VIOLATED.
6. R1 IS A FUNCTION OF EXISTING SIDEWALK WIDTH. SELECT TO CREATE SMOOTH TRANSITION.
7. MIN. OF 4'-0" TO EDGE OF FLARE OF ADJACENT DRIVEWAY APPROACH.

COMMERCIAL AND INDUSTRIAL DRIVEWAY APPROACH IN MONOLITHIC CURB, GUTTER AND SIDEWALK, LESS THAN 8'-6" WIDE

APPROVED BY: — DATE: JUNE 30, 2006 — REVISED: JULY 30, 2009 — DWG. 6C-1

2006 STANDARD DETAILS

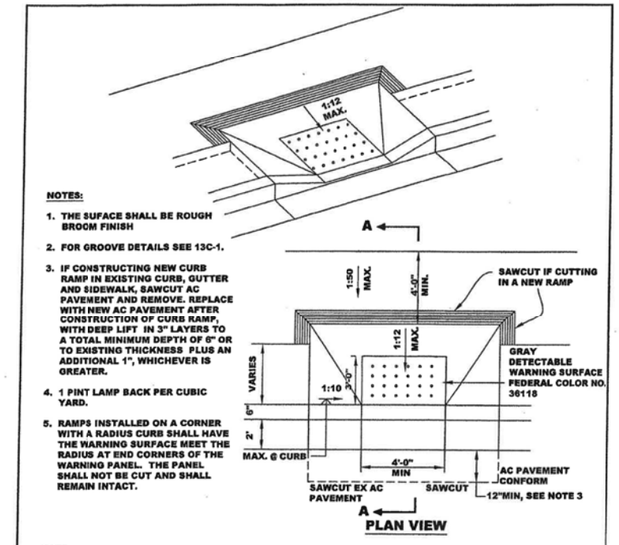

NOTES:

1. THE SUFACE SHALL BE ROUGH BROOM FINISH
2. FOR GROOVE DETAILS SEE 13C-1.
3. IF CONSTRUCTING NEW CURB RAMP IN EXISTING CURB, GUTTER AND SIDEWALK, SAWCUT AC PAVEMENT AND REMOVE. REPLACE WITH NEW AC PAVEMENT AFTER CONSTRUCTION OF CURB RAMP, WITH DEEP LIFT IN 3" LAYERS TO A TOTAL MINIMUM DEPTH OF 6" OR TO EXISTING THICKNESS PLUS AN ADDITIONAL 1", WHICHEVER IS GREATER.
4. 1 PINT LAMP BACK PER CUBIC YARD.
5. RAMPS INSTALLED ON A CORNER WITH A RADIUS CURB SHALL HAVE THE WARNING SURFACE MEET THE RADIUS AT END CORNERS OF THE WARNING PANEL. THE PANEL SHALL NOT BE CUT AND SHALL REMAIN INTACT.

NOTE

IF THE MAX. SLOPES AND MIN. DIMENSIONS CANNOT BE ACHIEVED, THE SIDEWALK SHALL BE DEPRESSED AS DETAILED IN STD DWG 13C-5

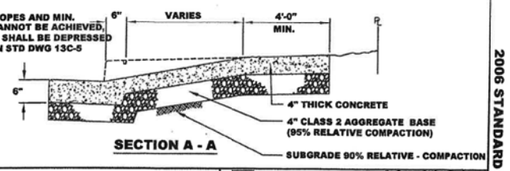

PERPENDICULAR CURB RAMP SEPARATED SIDEWALK

APPROVED BY: — DATE : JUNE 30, 2006 — REVISED : APRIL 15, 2014 — DWG. 13C-4

2006 STANDARD DETAILS

NOTES:

1. THE SURFACE SHALL BE ROUGH BROOM FINISH.
2. THERE SHALL BE A 12" WIDE BORDER OF 1/4" GROOVES SPACED AT APPROX. 3/4" O.C. AS SHOWN.
3. FOR GROOVE DETAILS SEE 13C-1.
4. 1 PINT LAMP BACK PER CUBIC YARD
5. IF CONSTRUCTING NEW CURB RAMP IN EXISTING CURB, GUTTER AND SIDEWALK, SAWCUT AC PAVEMENT AND REMOVE. REPLACE WITH NEW AC PAVEMENT AFTER CONSTRUCTION OF CURB RAMP, WITH DEEP LIFT IN 3" LAYERS TO A TOTAL MINIMUM DEPTH OF 6" OR TO EXISTING THICKNESS PLUS AN ADDITIONAL 1", WHICHEVER IS GREATER.
6. RAMPS INSTALLED ON A CORNER WITH A RADIUS CURB SHALL HAVE THE WARNING SURFACE MEET THE RADIUS AT END CORNERS OF THE WARNING PANEL. THE PANEL SHALL NOT BE CUT AND SHALL REMAIN INTACT.

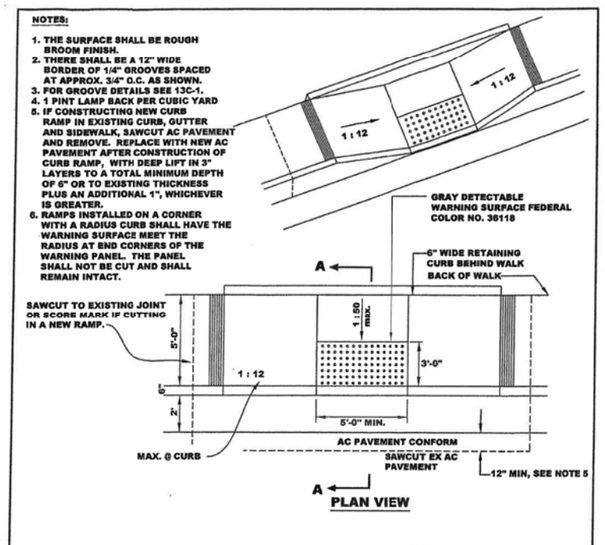

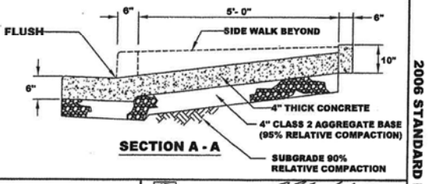

PARALLEL CURB RAMP MONOLITHIC SIDEWALK

APPROVED BY: — DATE : JUNE 30, 2006 — REVISED : APRIL 15, 2014 — DWG. 13C-2

2006 STANDARD DETAILS

CONSTRUCTION DETAILS

NOT TO SCALE

C-52

LAST REVISION: DATE PLOTTED => 6/20/2018; TIME PLOTTED => 11:05:09 AM

BORDER LAST REVISED 7/2/2010	USERNAME => Eiiif DGN FILE => 0413000204ga052.dgn	RELATIVE BORDER SCALE IS IN INCHES 0 1 2 3	UNIT 0000	PROJECT NUMBER & PHASE 0413000204

	REVISED BY	SCV			
	DATE REVISED	01/15/18			
CALCULATED-DESIGNED BY	SHAWN VOGTMAN				
CHECKED BY	STEVE LOUPE				
SUPERVISOR	TIMOTHY J. LEE				

STATE OF CALIFORNIA - DEPARTMENT OF TRANSPORTATION | CONSULTANT FUNCTIONAL SUPERVISOR

Caltrans

X:\237_101_Mathilda\000_CAD\Sheets\VGA-Const_Details\0413000204ga052.dgn

Dist	COUNTY	ROUTE	POST MILES TOTAL PROJECT	SHEET No.	TOTAL SHEETS
04	SCL	101,237	45.2/45.8, 2.7/3.3	83	736

6-13-18
REGISTERED CIVIL ENGINEER DATE

STEVE LOUPE No. 63575 Exp. 9/30/20 CIVIL — REGISTERED PROFESSIONAL ENGINEER — STATE OF CALIFORNIA

6-20-18
PLANS APPROVAL DATE

THE STATE OF CALIFORNIA OR ITS OFFICERS OR AGENTS SHALL NOT BE RESPONSIBLE FOR THE ACCURACY OR COMPLETENESS OF SCANNED COPIES OF THIS PLAN SHEET.

WMH CORPORATION 50 W San Fernando St Suite 950 San Jose, CA 95113	VTA 3331 N First St Building B San Jose, Ca 95134

NOTES:

1. THE SUFACE SHALL BE ROUGH BROOM FINISH.
2. THERE SHALL BE A 12" WIDE BORDER OF 1/4" GROOVES SPACE AT APPROX. 3/4" O.C. (SEE GROOVE DETAIL).
3. IF THE MAXIMUM SLOPES AND MINIMUM DIMENSION CANNOT BE ACHIEVED, THE SIDEWALK SHALL BE DEPRESSED AS DETAILED IN 13C-3.
4. IF CONSTRUCTING NEW CURB RAMP IN EXISTING CURB, GUTTER, AND SIDEWALK, SAWCUT AC PAVEMENT AND REMOVE. REPLACE WITH NEW AC PAVEMENT AFTER CONSTRUCTION OF CURB RAMP, WITH DEEP LIFT IN 3" LAYERS TO A TOTAL MINIMUM DEPTH OF 6" OR TO EXISTING THICKNESS PLUS AN ADDITIONAL 1", WHICHEVER IS GREATER.
5. 1 PINT LAMP BACK PER CUBIC YARD.
6. RAMPS INSTALLED ON A CORNER WITH A RADIUS CURB SHALL HAVE THE WARNING SURFACE MEET THE RADIUS AT END CORNERS OF THE WARNING PANEL. THE PANEL SHALL NOT BE CUT AND SHALL REMAIN INTACT.

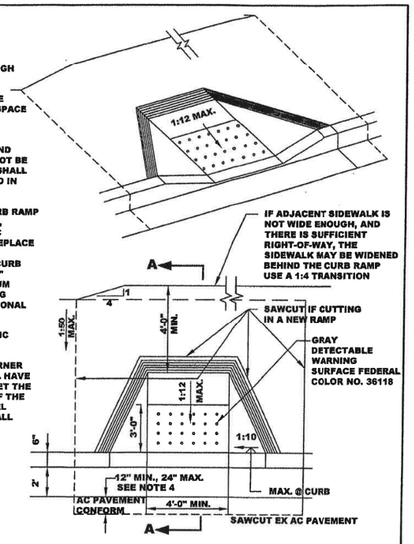

PERPENDICULAR CURB RAMP EXTRA WIDE SIDEWALK

APPROVED BY:
DATE REVISED : JUNE 30, 2006 : APRIL 15, 2014
DWG. 13C-1

2006 STANDARD DETAILS

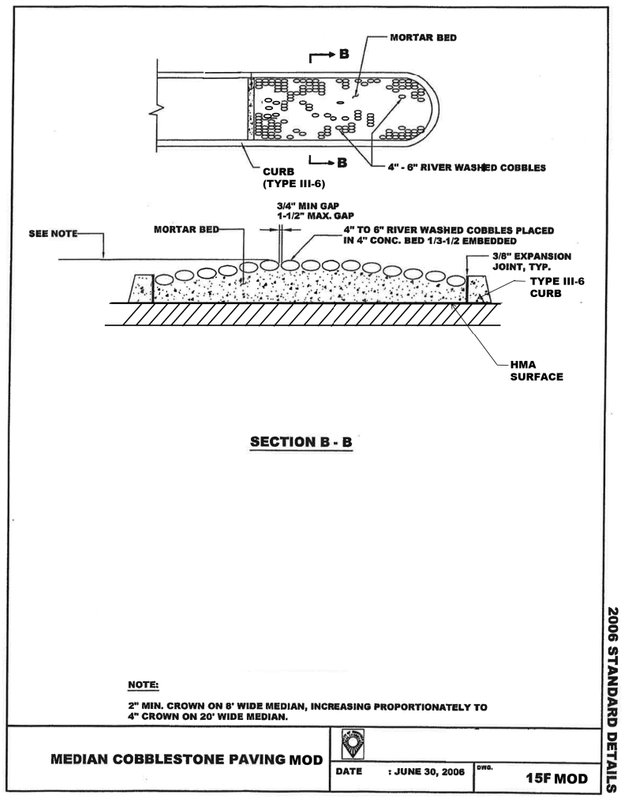

NOTE:

2" MIN. CROWN ON 8' WIDE MEDIAN, INCREASING PROPORTIONATELY TO 4" CROWN ON 20' WIDE MEDIAN.

MEDIAN COBBLESTONE PAVING MOD

DATE : JUNE 30, 2006
DWG. 15F MOD

2006 STANDARD DETAILS

A 3" HIGH LETTER "S" OR "W" IS TO BE PLACED ON TOP OF CURB AT PROPER LOCATIONS OVER LATERALS.

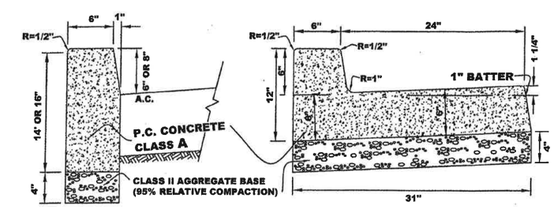

NOTE: PROVIDE 1 PINT LAMPBLACK / CUBIC YARD IN PCC

TYPE I-6 AND I-8 CURB **TYPE II CURB (24" GUTTER PAN)**

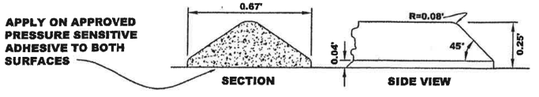

STD. RAISED TRAFFIC BARS

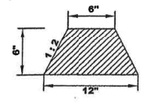

A.C. DIKE

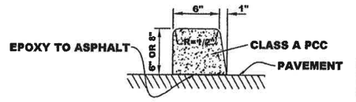

TYPE III-6 AND III-8 CURB

CURBS: TYPES I-6, I-8, II (24" GUTTER PAN) III-6, III-8, AC DIKE, AND TRAFFIC BARS

APPROVED BY:
DATE : JUNE 30, 2006
REVISED : APRIL 8, 2014
DWG. 15C

2006 STANDARD DETAILS

CONSTRUCTION DETAILS

NOT TO SCALE

C-53

CALCULATED-DESIGNED BY	CHECKED BY	REVISED BY	DATE REVISED
SHAWN VOGTMAN	STEVE LOUPE	SCV	01/15/18

STATE OF CALIFORNIA - DEPARTMENT OF TRANSPORTATION
Caltrans®
CONSULTANT FUNCTIONAL SUPERVISOR: TIMOTHY J. LEE

X:\237_101_Mathilda\000_CAD\Sheets\000_Submittals\Conformed Plans\0413000204ga053.dgn

LAST REVISION: 01-15-18
DATE PLOTTED => 12/3/2018
TIME PLOTTED => 12:21:15 PM

BORDER LAST REVISED 7/2/2010 | USERNAME => eilif | DGN FILE => 0413000204ga053.dgn | RELATIVE BORDER SCALE IS IN INCHES 0 1 2 3 | UNIT 0000 | PROJECT NUMBER & PHASE 0413000204

Dist	COUNTY	ROUTE	POST MILES TOTAL PROJECT	SHEET No.	TOTAL SHEETS
04	SCL	101,237	45.2/45.8, 2.7/3.3	84	736

REGISTERED CIVIL ENGINEER — 6-13-18 DATE

6-20-18
PLANS APPROVAL DATE

REGISTERED PROFESSIONAL ENGINEER — STEVE LOUPE — No. 63575 — Exp. 9/30/18 — CIVIL — STATE OF CALIFORNIA

THE STATE OF CALIFORNIA OR ITS OFFICERS OR AGENTS SHALL NOT BE RESPONSIBLE FOR THE ACCURACY OR COMPLETENESS OF SCANNED COPIES OF THIS PLAN SHEET.

WMH CORPORATION
50 W San Fernando St
Suite 950
San Jose, CA 95113

VTA
3331 N First St
Building B
San Jose, Ca 95134

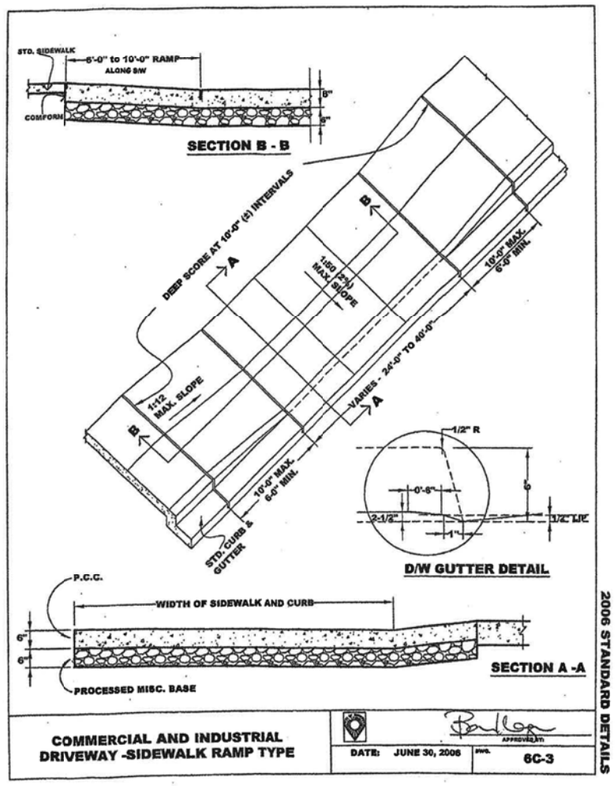

CONSTRUCTION DETAILS

NOT TO SCALE

C-54

STATE OF CALIFORNIA - DEPARTMENT OF TRANSPORTATION	CONSULTANT FUNCTIONAL SUPERVISOR	CALCULATED-DESIGNED BY	SHAWN VOGTMAN	REVISED BY SCV
Caltrans	TIMOTHY J. LEE	CHECKED BY	STEVE LOUPE	DATE REVISED 01/15/18

X:\237_101_Mathilda\000_CAD\Sheets\VGA-Const Details\0413000204ga054.dgn

LAST REVISION 01-15-18 | DATE PLOTTED => 6/20/2018 | TIME PLOTTED => 11:06:15 AM

BORDER LAST REVISED 7/2/2010 | USERNAME => Eilif | DGN FILE => 0413000204ga054.dgn | RELATIVE BORDER SCALE IS IN INCHES 0 1 2 3 | UNIT 0000 | PROJECT NUMBER & PHASE 0413000204

NOTE: FOR DETAILS NOT SHOWN SEE CITY STANDARD DETAIL 6C-3.

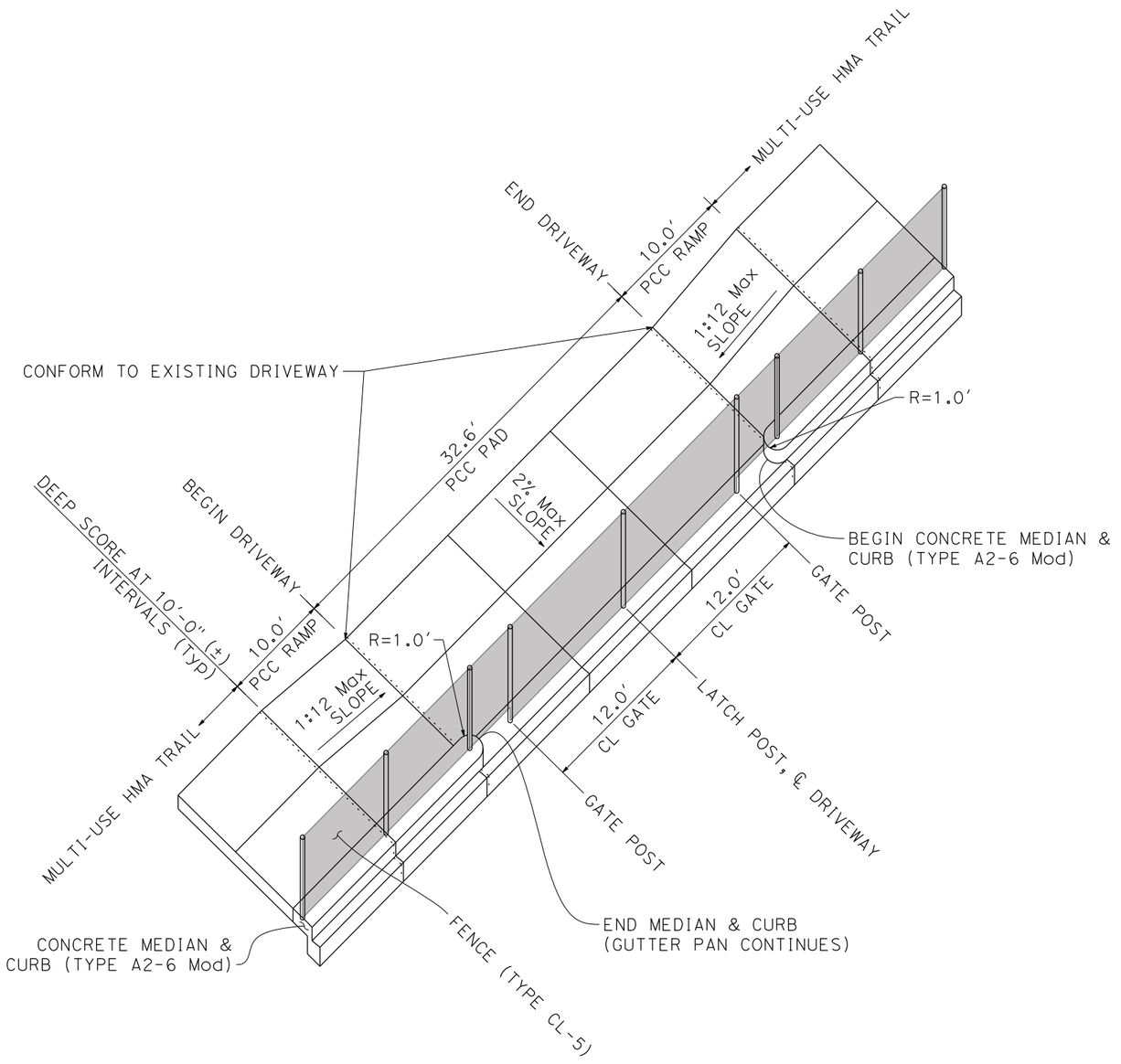

COMMERCIAL AND INDUSTRIAL DRIVEWAY
-SIDEWALK RAMP TYPE 6C-3 MODIFIED

Dist	COUNTY	ROUTE	POST MILES TOTAL PROJECT	SHEET No.	TOTAL SHEETS
04	SCL	101,237	45.2/45.8, 2.7/3.3	85	736

REGISTERED CIVIL ENGINEER — 6-13-18 DATE

6-20-18
PLANS APPROVAL DATE

STEVE LOUPE No. 63575 Exp. 9/30/18 CIVIL — REGISTERED PROFESSIONAL ENGINEER — STATE OF CALIFORNIA

THE STATE OF CALIFORNIA OR ITS OFFICERS OR AGENTS SHALL NOT BE RESPONSIBLE FOR THE ACCURACY OR COMPLETENESS OF SCANNED COPIES OF THIS PLAN SHEET.

WMH CORPORATION
50 W San Fernando St
Suite 950
San Jose, CA 95113

VTA
3331 N First St
Building B
San Jose, Ca 95134

CONSTRUCTION DETAILS

NO SCALE

C-55

	REVISED BY	DATE REVISED
	SCV	01/15/18

CALCULATED-DESIGNED BY: SHAWN VOGTMAN
CHECKED BY: STEVE LOUPE
CONSULTANT FUNCTIONAL SUPERVISOR: TIMOTHY J. LEE

STATE OF CALIFORNIA - DEPARTMENT OF TRANSPORTATION
Caltrans

X:\237_101_Mathilde\000_CAD\Sheets\GA-Const Details\0413000204ga055.dgn

LAST REVISION 01-15-18 TIME PLOTTED => 11:06:28 AM
DATE PLOTTED => 6/20/2018

BORDER LAST REVISED 7/2/2010 | USERNAME => Eilif | DGN FILE => 0413000204ga055.dgn | RELATIVE BORDER SCALE IS IN INCHES 0 1 2 3 | UNIT 0000 | PROJECT NUMBER & PHASE 0413000204

Dist	COUNTY	ROUTE	POST MILES TOTAL PROJECT	SHEET No.	TOTAL SHEETS
04	SCL	101,237	45.2/45.8, 2.7/3.3	86	736

REGISTERED CIVIL ENGINEER 6-13-18 DATE

6-20-18
PLANS APPROVAL DATE

REGISTERED PROFESSIONAL ENGINEER STEVE LOUPE No. 63575 Exp. 9/30/18 CIVIL STATE OF CALIFORNIA

THE STATE OF CALIFORNIA OR ITS OFFICERS OR AGENTS SHALL NOT BE RESPONSIBLE FOR THE ACCURACY OR COMPLETENESS OF SCANNED COPIES OF THIS PLAN SHEET.

WMH CORPORATION
50 W San Fernando St
Suite 950
San Jose, CA 95113

VTA
3331 N First St
Building B
San Jose, Ca 95134

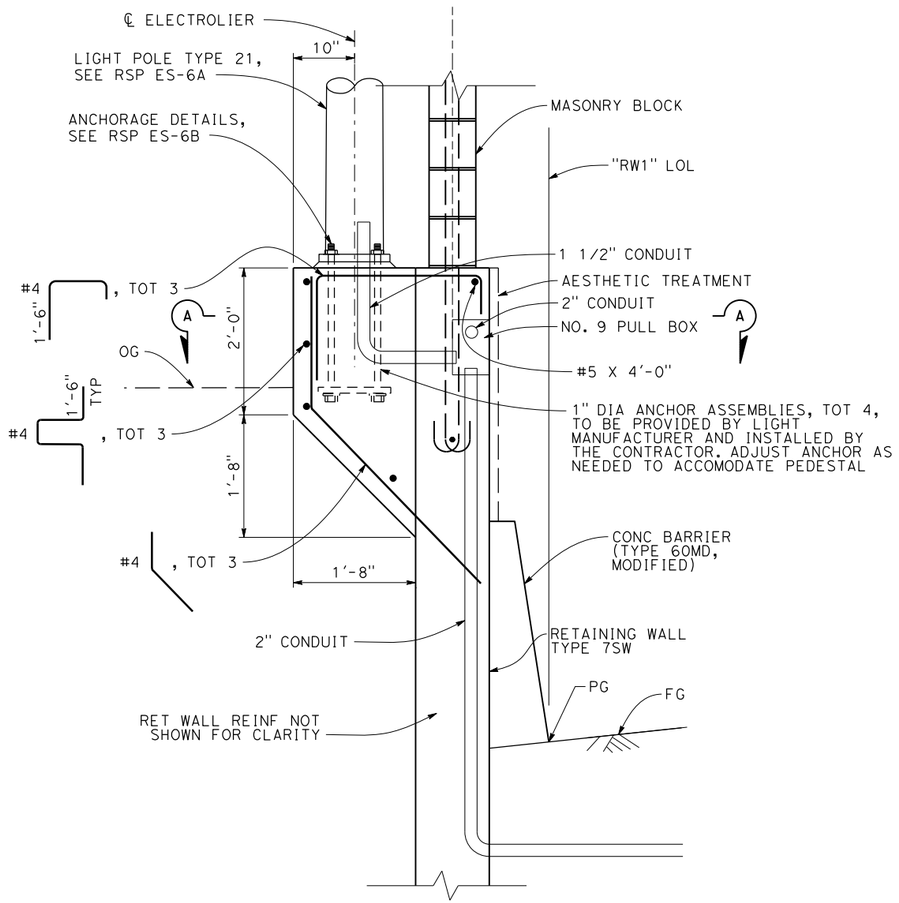

ELECTROLIER PEDESTAL DETAIL
1" = 1'-0"

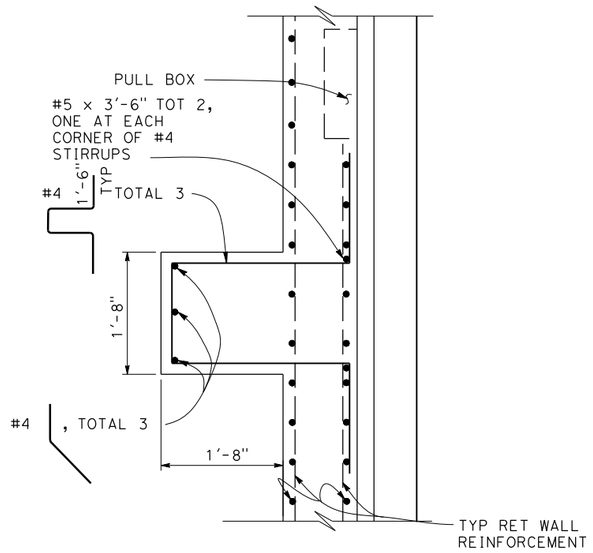

SECTION A-A
1" = 1'-0"

THE CONTRACTOR SHALL VERIFY ALL CONTROLLING FIELD DIMENSIONS BEFORE ORDERING OR FABRICATING ANY MATERIAL

ELECTROLIER PEDESTAL AT RW1

CONSTRUCTION DETAILS

SCALE AS SHOWN

C-56

STATE OF CALIFORNIA - DEPARTMENT OF TRANSPORTATION
Caltrans®

CONSULTANT FUNCTIONAL SUPERVISOR: TIMOTHY J. LEE
CALCULATED-DESIGNED BY: SHAWN VOGTMAN
CHECKED BY: STEVE LOUPE
REVISED BY: SCV
DATE REVISED: 01/15/18

X:\237_101_Mathilda\000_CAD\Sheets\GA-Const_Details\0413000204ga056.dgn

LAST REVISION 01-15-18
DATE PLOTTED => 6/20/2018
TIME PLOTTED => 11:06:30 AM

Dist	COUNTY	ROUTE	POST MILES TOTAL PROJECT	SHEET No.	TOTAL SHEETS
04	SCL	101,237	45.2/45.8, 2.7/3.3	87	736

REGISTERED CIVIL ENGINEER — DATE: 6-13-18

PLANS APPROVAL DATE: 6-20-18

REGISTERED PROFESSIONAL ENGINEER — STEVE LOUPE — No. 63575 — Exp. 9/30/18 — CIVIL — STATE OF CALIFORNIA

THE STATE OF CALIFORNIA OR ITS OFFICERS OR AGENTS SHALL NOT BE RESPONSIBLE FOR THE ACCURACY OR COMPLETENESS OF SCANNED COPIES OF THIS PLAN SHEET.

WMH CORPORATION
50 W San Fernando St
Suite 950
San Jose, CA 95113

VTA
3331 N First St
Building B
San Jose, Ca 95134

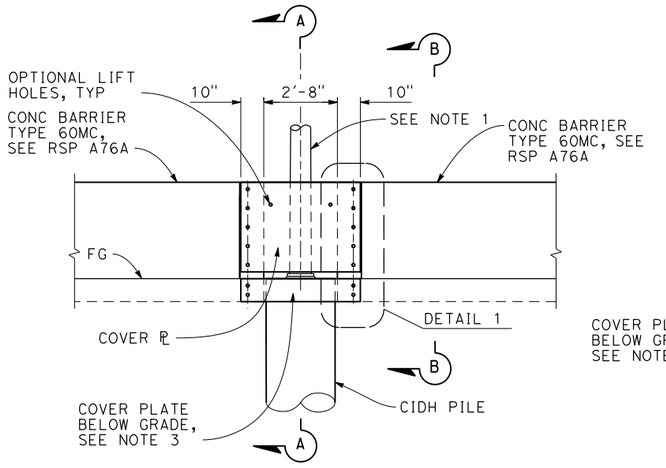

ELEVATION
3/8" = 1'-0"

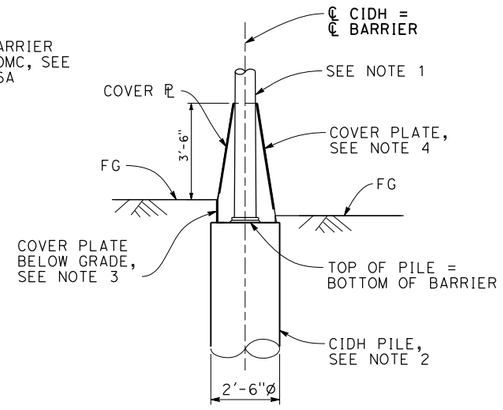

SECTION A-A
3/8" = 1'-0"

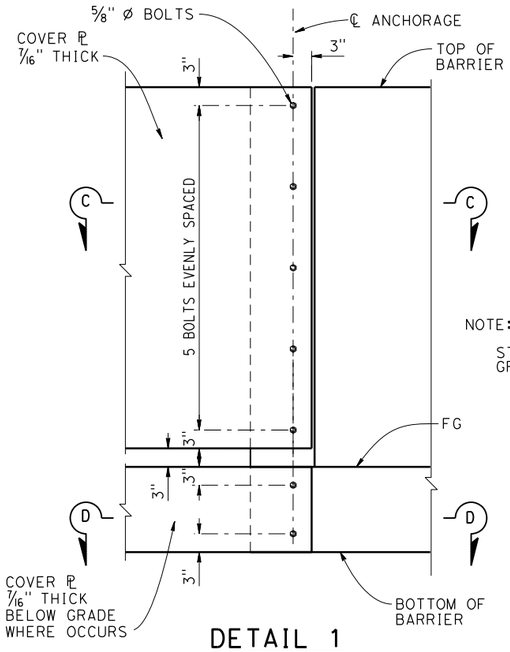

DETAIL 1
1" = 1'-0"

NOTE:

STRUCTURAL STEEL SHALL BE ASTM A709/A709M GRADE 50 UNLESS OTHERWISE NOTED.

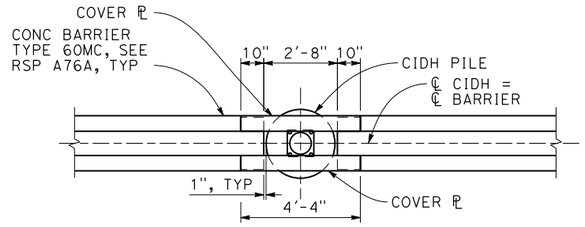

PLAN
3/8" = 1'-0"

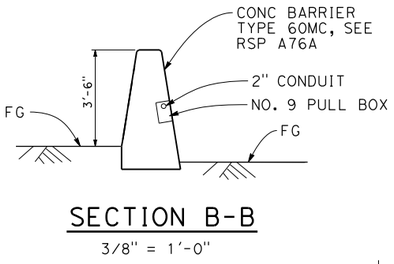

SECTION B-B
3/8" = 1'-0"

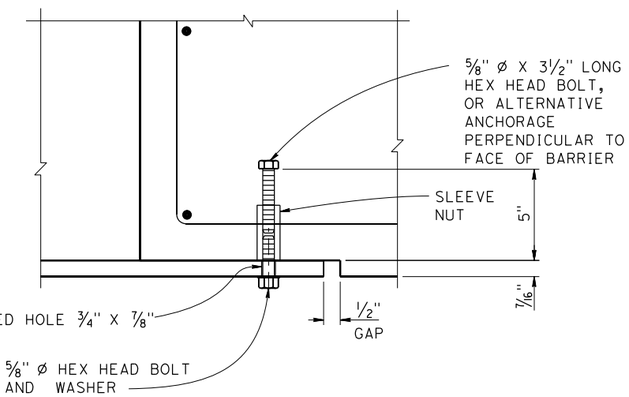

DETAIL 2
3" = 1'-0"

NOTES:
1. FOR POLE TYPE 21, SEE RSP ES-6A.
   FOR POLE TYPE 15-FBS, SEE RSP ES-7J.
2. FOR PILE DETAIL, SEE RSP ES-7N, DETAIL A.
3. DEPTH OF COVER PLATE TO MATCH DEPTH OF UPPER ROADBED STRUCTURE SECTION.
4. COVER PLATE AT LOWER ROADBED SIDE TO BE 7/16" THICK AND OF ONE PIECE WITH THE SAME SECTION AS SECTION C-C IN DETAIL 1.
5. ALL STEEL PLATE, NUTS, BOLTS AND WASHERS MUST BE GALVANIZED.

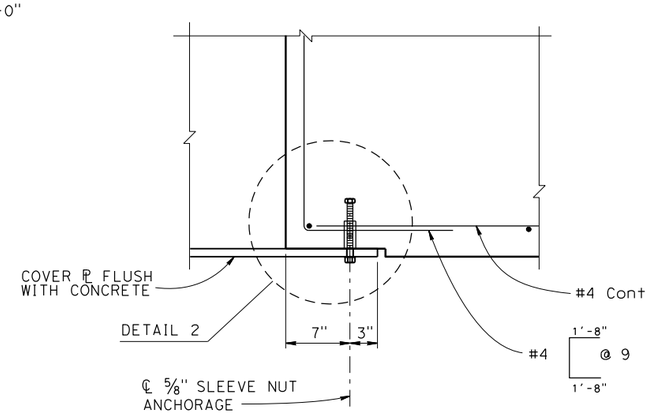

SECTION C-C
1½" = 1'-0"

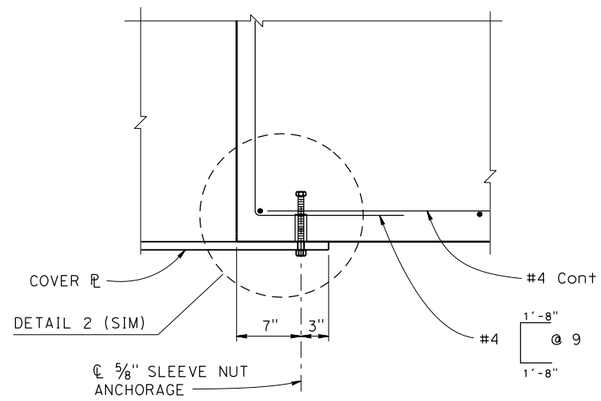

SECTION D-D
1½" = 1'-0"

LIGHT AND FLASHING BEACON POLE SUPPORT DETAILS AT CONCRETE BARRIER TYPE 60MC

CONSTRUCTION DETAILS

SCALE AS SHOWN

C-57

THE CONTRACTOR SHALL VERIFY ALL CONTROLLING FIELD DIMENSIONS BEFORE ORDERING OR FABRICATING ANY MATERIAL

CALCULATED-DESIGNED BY	CHECKED BY	REVISED BY	DATE REVISED
SHAWN VOGTMAN	STEVE LOUPE	SCV	01/15/18

CONSULTANT FUNCTIONAL SUPERVISOR: TIMOTHY J. LEE

STATE OF CALIFORNIA - DEPARTMENT OF TRANSPORTATION

Caltrans

LAST REVISION 01-15-18 | DATE PLOTTED => 6/20/2018 | TIME PLOTTED => 11:06:31 AM

X:\237_101_Morhilde\000_CAD\Sheets\GA-Const_Details\0413000204ga057.dgn

BORDER LAST REVISED 7/2/2010 | USERNAME => Eiiif | DGN FILE => 0413000204ga057.dgn | RELATIVE BORDER SCALE IS IN INCHES 0 1 2 3 | UNIT 0000 | PROJECT NUMBER & PHASE 0413000204

Dist	COUNTY	ROUTE	POST MILES TOTAL PROJECT	SHEET No.	TOTAL SHEETS
04	SCL	101,237	45.2/45.8, 2.7/3.3	88	736

REGISTERED CIVIL ENGINEER — 6-13-18 DATE

6-20-18
PLANS APPROVAL DATE

STEVE LOUPE No. 63575 Exp. 9/30/18 CIVIL — REGISTERED PROFESSIONAL ENGINEER — STATE OF CALIFORNIA

THE STATE OF CALIFORNIA OR ITS OFFICERS OR AGENTS SHALL NOT BE RESPONSIBLE FOR THE ACCURACY OR COMPLETENESS OF SCANNED COPIES OF THIS PLAN SHEET.

WMH CORPORATION
50 W San Fernando St
Suite 950
San Jose, CA 95113

VTA
3331 N First St
Building B
San Jose, Ca 95134

ABBREVIATIONS:

FL FLOWLINE

TOB TOP OF BANK

TOC TOP OF CURB

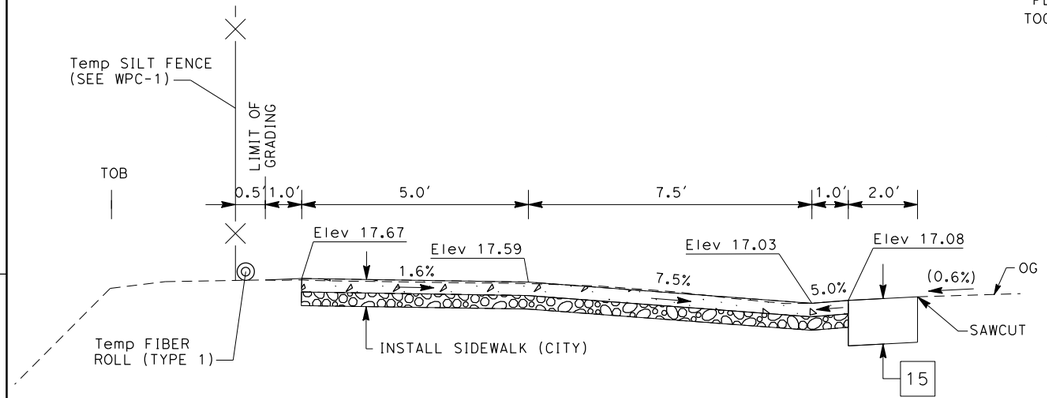

SECTION A-A
NOT TO SCALE

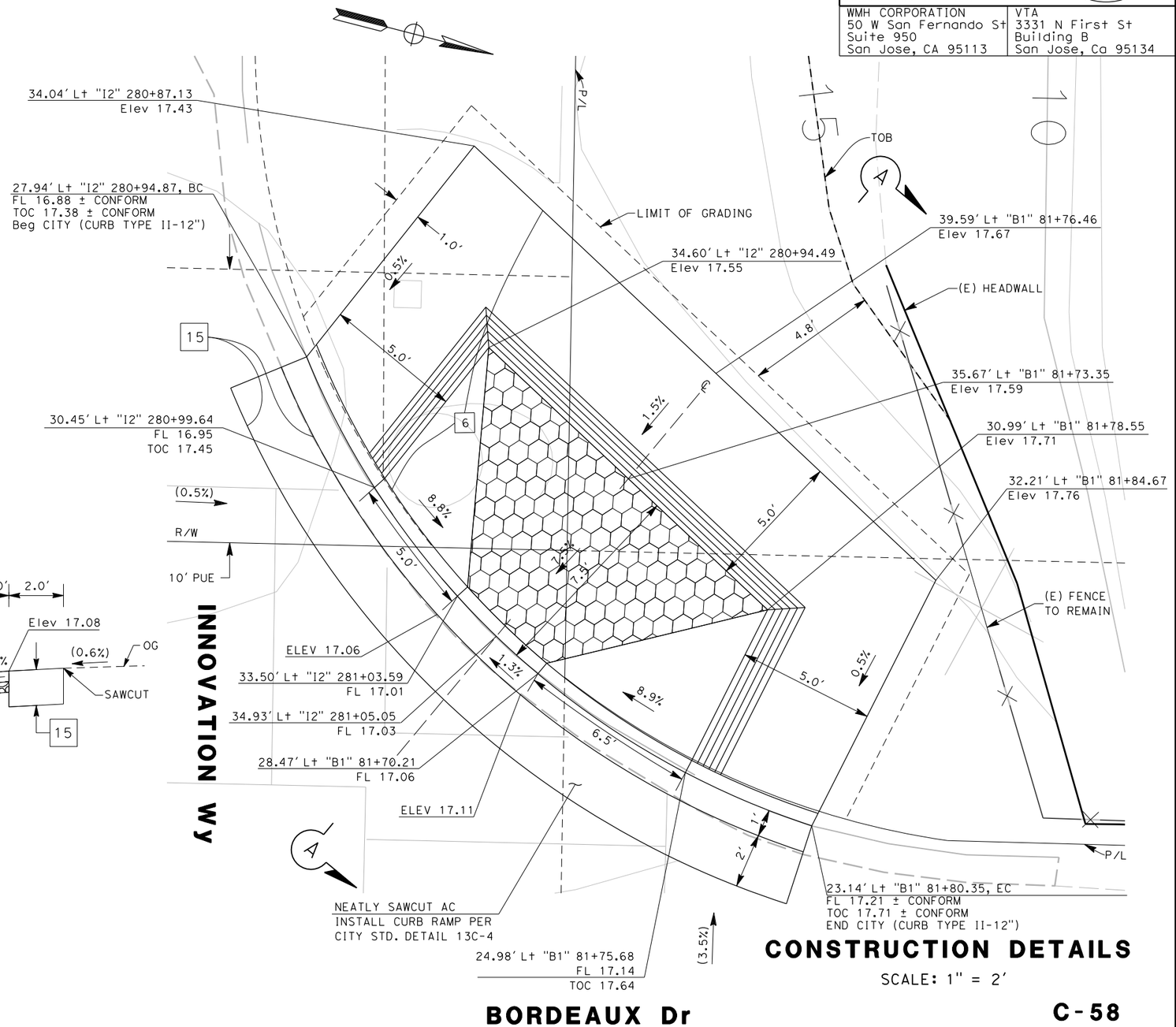

CONSTRUCTION DETAILS

SCALE: 1" = 2'

C-58

STATE OF CALIFORNIA - DEPARTMENT OF TRANSPORTATION	CONSULTANT FUNCTIONAL SUPERVISOR	CALCULATED-DESIGNED BY	REVISED BY	SCV
Caltrans	TIMOTHY J. LEE	CHECKED BY	DATE REVISED	01/15/18
		SHAWN VOGTMAN		
		STEVE LOUPE		

X:\237_101_Marhilda\000_CAD\Sheets\GA-Const_Details\0413000204ga058.dgn

LAST REVISION 01-15-18
DATE PLOTTED => 6/20/2018
TIME PLOTTED => 11:06:35 AM

BORDER LAST REVISED 7/2/2010 | USERNAME => Eilif | DGN FILE => 0413000204ga058.dgn | RELATIVE BORDER SCALE IS IN INCHES 0 1 2 3 | UNIT 0000 | PROJECT NUMBER & PHASE 0413000204

NOTE: FOR ACCURATE RIGHT OF WAY DATA, CONTACT
RIGHT OF WAY ENGINEERING AT THE DISTRICT OFFICE.

Dist	COUNTY	ROUTE	POST MILES TOTAL PROJECT	SHEET No.	TOTAL SHEETS
04	SCL	101,237	45.2/45.8, 2.7/3.3	89	736

6-13-18
REGISTERED CIVIL ENGINEER — DATE

6-20-18
PLANS APPROVAL DATE

REGISTERED PROFESSIONAL ENGINEER — STEVE LOUPE — No. 63575 — Exp. 9/30/18 — CIVIL — STATE OF CALIFORNIA

THE STATE OF CALIFORNIA OR ITS OFFICERS OR AGENTS SHALL NOT BE RESPONSIBLE FOR THE ACCURACY OR COMPLETENESS OF SCANNED COPIES OF THIS PLAN SHEET.

WMH CORPORATION
50 W San Fernando St
Suite 950
San Jose, CA 95113

VTA
3331 N First St
Building B
San Jose, Ca 95134

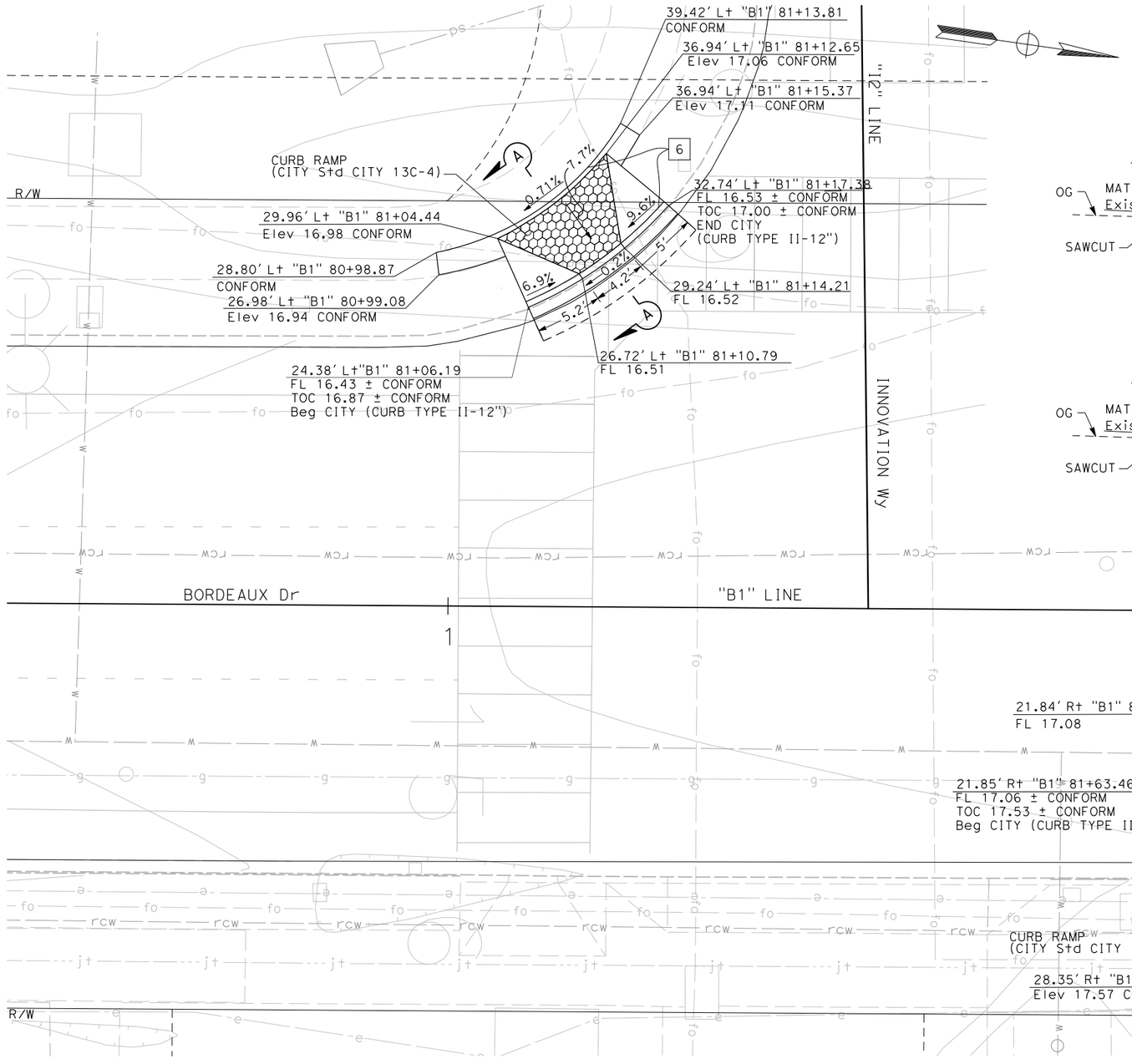

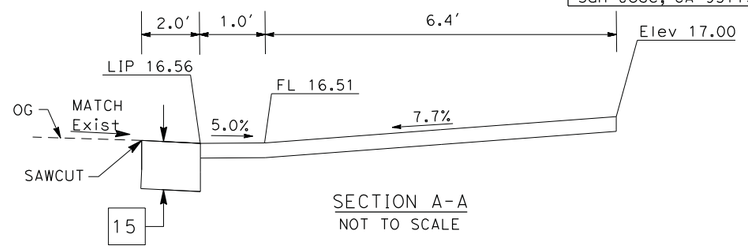

SECTION A-A
NOT TO SCALE

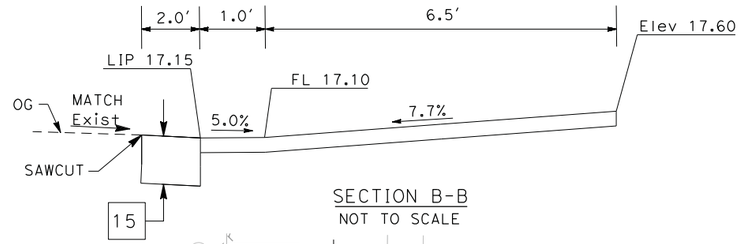

SECTION B-B
NOT TO SCALE

CONSTRUCTION DETAILS

CURB RAMPS

SCALE: 1" = 5'

C-59

REVISED BY	DATE REVISED
SCV	01/15/18

SHAWN VOGTMAN — CALCULATED-DESIGNED BY
STEVE LOUPE — CHECKED BY
TIMOTHY J. LEE — CONSULTANT FUNCTIONAL SUPERVISOR

STATE OF CALIFORNIA - DEPARTMENT OF TRANSPORTATION
Caltrans

X:\237_101_Mathilde\000_CAD\Sheets\GA-Const Details\0413000204ga059.dgn

LAST REVISION: 01-15-18 — DATE PLOTTED => 6/20/2018 — TIME PLOTTED => 11:06:38 AM

BORDER LAST REVISED 7/2/2010 | USERNAME => Eilif | DGN FILE => 0413000204ga059.dgn | RELATIVE BORDER SCALE IS IN INCHES 0 1 2 3 | UNIT 0000 | PROJECT NUMBER & PHASE 0413000204

NOTE: FOR ACCURATE RIGHT OF WAY DATA, CONTACT RIGHT OF WAY ENGINEERING AT THE DISTRICT OFFICE.

Dist	COUNTY	ROUTE	POST MILES TOTAL PROJECT	SHEET No.	TOTAL SHEETS
04	SCL	101,237	45.2/45.8, 2.7/3.3	90	736

REGISTERED CIVIL ENGINEER 6-13-18 DATE

6-20-18

PLANS APPROVAL DATE

REGISTERED PROFESSIONAL ENGINEER STEVE LOUPE No. 63575 Exp. 9/30/18 CIVIL STATE OF CALIFORNIA

THE STATE OF CALIFORNIA OR ITS OFFICERS OR AGENTS SHALL NOT BE RESPONSIBLE FOR THE ACCURACY OR COMPLETENESS OF SCANNED COPIES OF THIS PLAN SHEET.

WMH CORPORATION
50 W San Fernando St
Suite 950
San Jose, CA 95113

VTA
3331 N First St
Building B
San Jose, Ca 95134

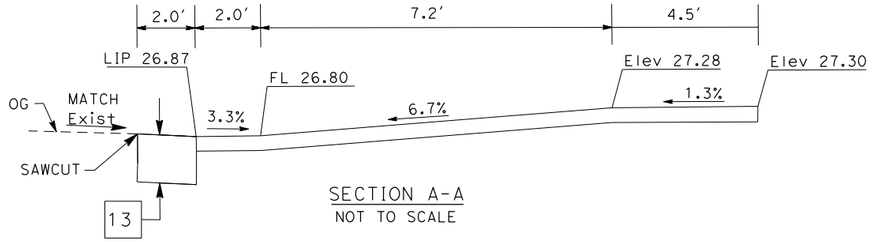

SECTION A-A
NOT TO SCALE

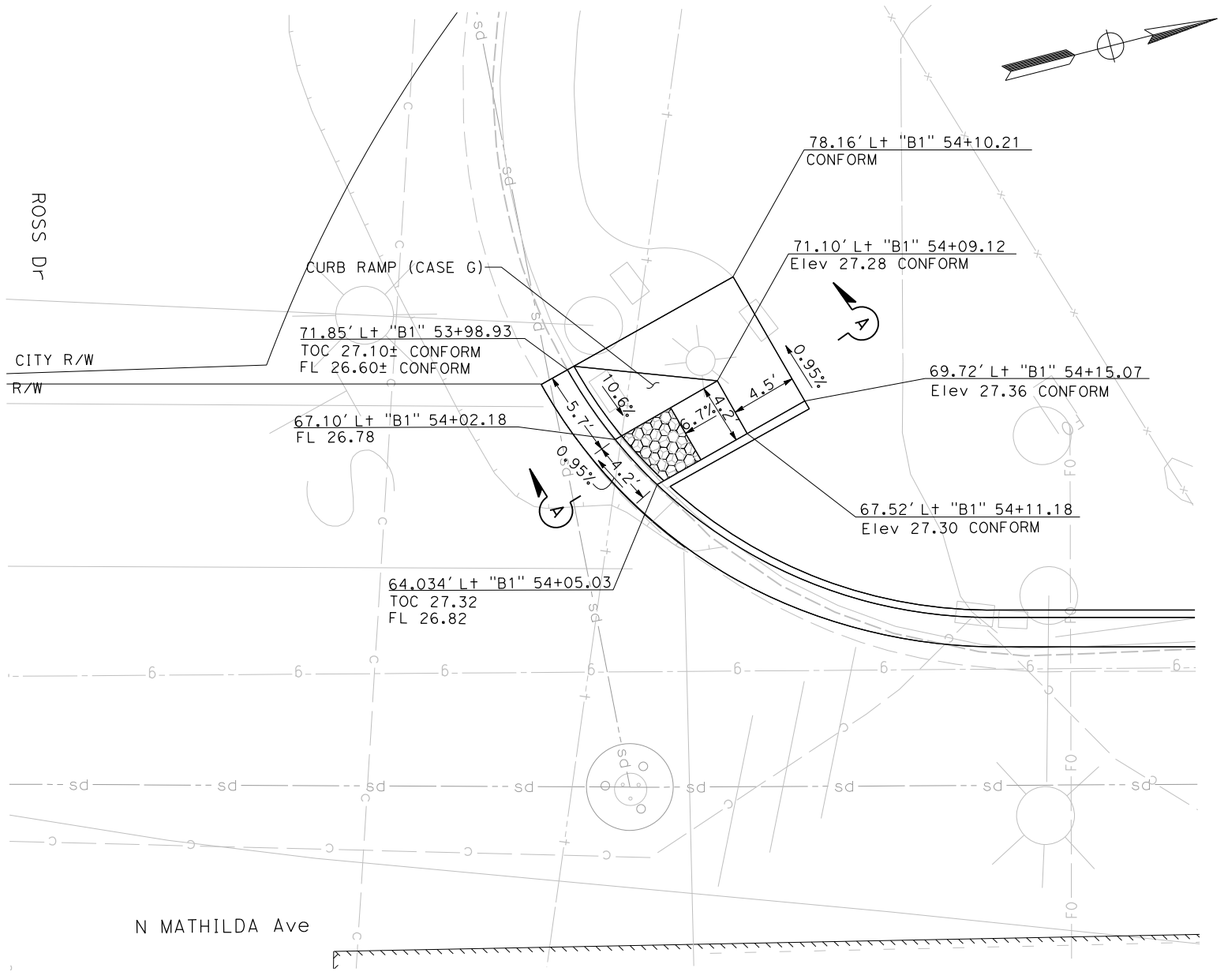

CONSTRUCTION DETAILS

CURB RAMPS

SCALE: 1" = 5'

C-60

STATE OF CALIFORNIA - DEPARTMENT OF TRANSPORTATION
Caltrans

CONSULTANT FUNCTIONAL SUPERVISOR: TIMOTHY J. LEE
CALCULATED-DESIGNED BY: SHAWN VOGTMAN
CHECKED BY: STEVE LOUPE
REVISED BY: SCV
DATE REVISED: 01/15/18

X:\237_101_Mathilda\000_CAD\Sheets\GA-Const_Details\0413000204ga060.dgn

LAST REVISION 01-15-18
DATE PLOTTED => 6/20/2018
TIME PLOTTED => 11:06:40 AM

NOTE: FOR ACCURATE RIGHT OF WAY DATA, CONTACT
RIGHT OF WAY ENGINEERING AT THE DISTRICT OFFICE.

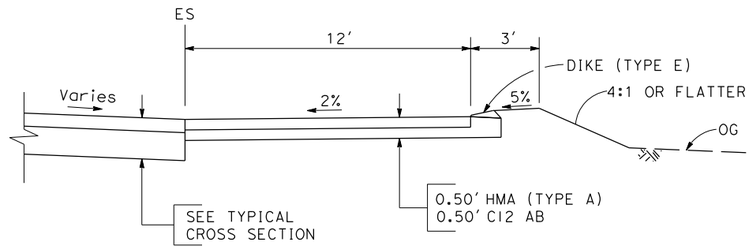

SECTION A-A

"M5" 71+92 (Rt)
"M6" 65+32 (Rt)
"M2" 70+39 (Rt)

MAINTENANCE VEHICLE PULLOUT WITH DIKE

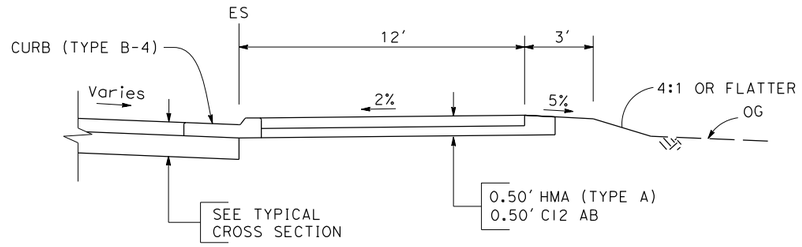

SECTION A-A

"D5a" 08+80 (Lt)
"D3" 10+80 (Rt)

MAINTENANCE VEHICLE PULLOUT WITH CURB

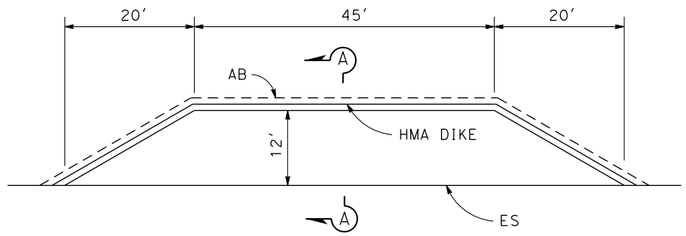

PLAN
(FOR DETAILS NOT SHOWN, SEE STANDARD PLAN H9)

MAINTENANCE VEHICLE PULLOUT

FOR NOTES AND ABBREVIATIONS AND
LEGEND, SEE SHEET C-13 AND L-1

Dist	COUNTY	ROUTE	POST MILES TOTAL PROJECT	SHEET No.	TOTAL SHEETS
04	SCL	101,237	45.2/45.8, 2.7/3.3	91	736

REGISTERED CIVIL ENGINEER — 6-13-18 DATE

6-20-18
PLANS APPROVAL DATE

REGISTERED PROFESSIONAL ENGINEER
STEVE LOUPE
No. 63575
Exp. 9/30/18
CIVIL
STATE OF CALIFORNIA

THE STATE OF CALIFORNIA OR ITS OFFICERS OR AGENTS SHALL NOT BE RESPONSIBLE FOR THE ACCURACY OR COMPLETENESS OF SCANNED COPIES OF THIS PLAN SHEET.

WMH CORPORATION 50 W San Fernando St Suite 950 San Jose, CA 95113	VTA 3331 N First St Building B San Jose, Ca 95134

CONSTRUCTION DETAILS

NO SCALE

C-61

REVISED BY	DATE REVISED
SCV	01/15/18

CALCULATED-DESIGNED BY: SHAWN VOGTMAN
CHECKED BY: STEVE LOUPE
CONSULTANT FUNCTIONAL SUPERVISOR: TIMOTHY J. LEE
STATE OF CALIFORNIA - DEPARTMENT OF TRANSPORTATION

LAST REVISION 01-15-18
DATE PLOTTED => 6/20/2018
TIME PLOTTED => 11:06:41 AM

X:\237_101_Mathilda\000_CAD\Sheets\GA-Const_Details\0413000204ga061.dgn

BORDER LAST REVISED 7/2/2010 | USERNAME => Eilif | DGN FILE => 0413000204ga061.dgn | RELATIVE BORDER SCALE IS IN INCHES 0 1 2 3 | UNIT 0000 | PROJECT NUMBER & PHASE 0413000204

NOTE: FOR ACCURATE RIGHT OF WAY DATA, CONTACT RIGHT OF WAY ENGINEERING AT THE DISTRICT OFFICE.

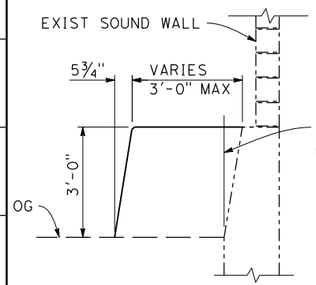

SECTION A-A

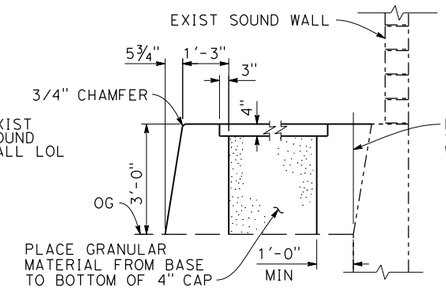

SECTION B-B

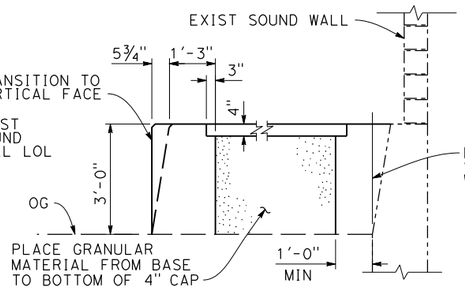

SECTION C-C

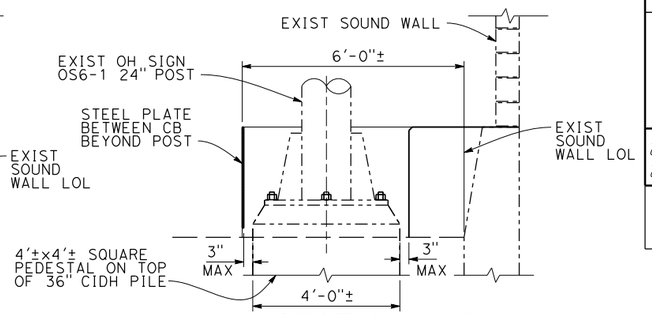

SECTION D-D

Dist	COUNTY	ROUTE	POST MILES TOTAL PROJECT	SHEET No.	TOTAL SHEETS
04	SCL	101,237	45.2/45.8, 2.7/3.3	92	736

REGISTERED CIVIL ENGINEER — 6-13-18 DATE

6-20-18
PLANS APPROVAL DATE

REGISTERED PROFESSIONAL ENGINEER — STEVE LOUPE — No. 63575 — Exp. 9/30/18 — CIVIL — STATE OF CALIFORNIA

THE STATE OF CALIFORNIA OR ITS OFFICERS OR AGENTS SHALL NOT BE RESPONSIBLE FOR THE ACCURACY OR COMPLETENESS OF SCANNED COPIES OF THIS PLAN SHEET.

WMH CORPORATION 50 W San Fernando St Suite 950 San Jose, CA 95113	VTA 3331 N First St Building B San Jose, Ca 95134

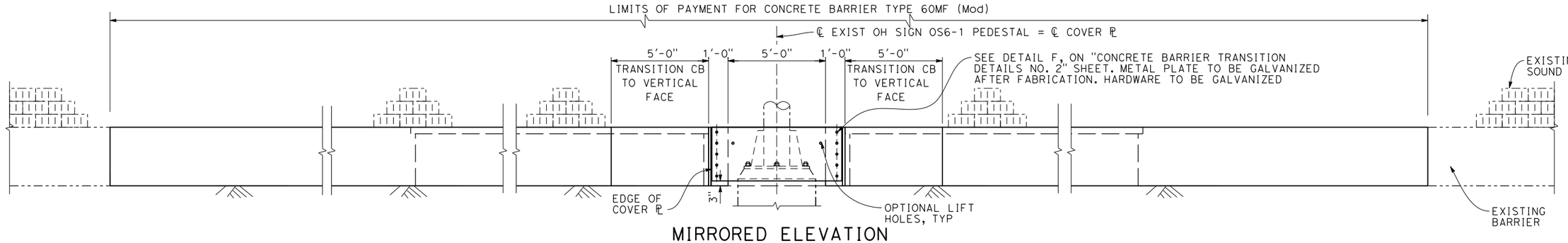

MIRRORED ELEVATION

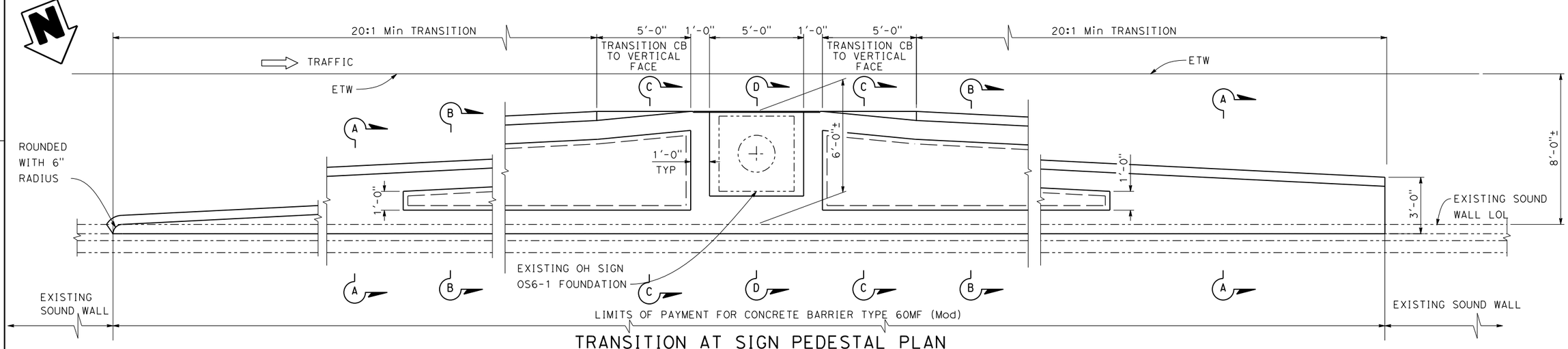

TRANSITION AT SIGN PEDESTAL PLAN

Concrete Barrier Type 60MF

NOTE:
FOR DETAILS NOT SHOWN, SEE REVISED STANDARD PLAN RSP A76C.

THE CONTRACTOR SHALL VERIFY ALL CONTROLLING FIELD DIMENSIONS BEFORE ORDERING OR FABRICATING ANY MATERIAL

CONCRETE BARRIER TRANSITION DETAILS NO. 1

SCALE AS SHOWN **C-62**

REVISED BY	DATE REVISED
SCV	01/15/18

CALCULATED-DESIGNED BY: SHAWN VOGTMAN
CHECKED BY: STEVE LOUPE
SUPERVISOR: TIMOTHY J. LEE
CONSULTANT FUNCTIONAL SUPERV

STATE OF CALIFORNIA - DEPARTMENT OF TRANSPORTATION
Caltrans

LAST REVISION: DATE PLOTTED => 6/20/2018 01-15-18 TIME PLOTTED => 11:06:44 AM

X:\237_101_Mathilde\000_CAD\Sheets\VGA-Const_Details\0413000204ga062.dgn

BORDER LAST REVISED 7/2/2010 | USERNAME => Eilif | DGN FILE => 0413000204ga062.dgn | RELATIVE BORDER SCALE IS IN INCHES 0 1 2 3 | UNIT 0000 | PROJECT NUMBER & PHASE 0413000204

NOTE: FOR ACCURATE RIGHT OF WAY DATA, CONTACT RIGHT OF WAY ENGINEERING AT THE DISTRICT OFFICE.

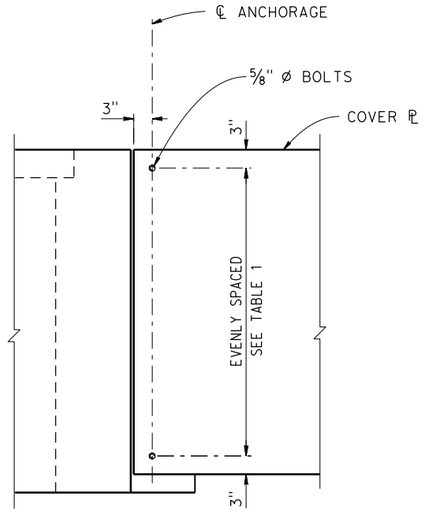

DETAIL F

TABLE 1		
L (ft)	PLATE THICKNESS (in)	TOTAL No. OF BOLTS
8'-6" Max	⅞	10
6'-6" Max	11/16	7
4'-6" Max	¾	5

NOTE:

Structural steel shall be ASTM A709/A709M Grade 50 unless otherwise noted.

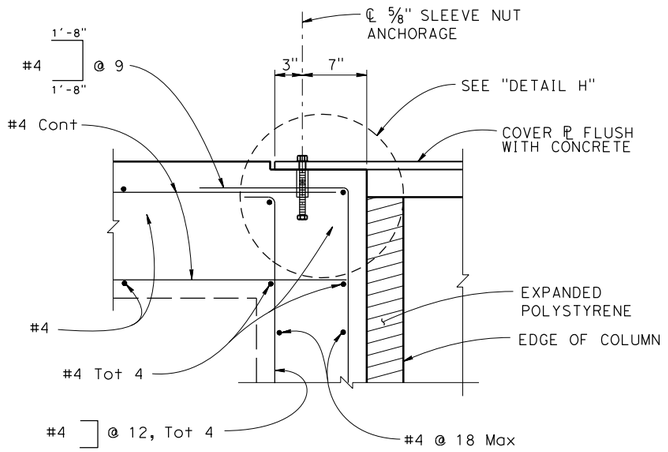

DETAIL G

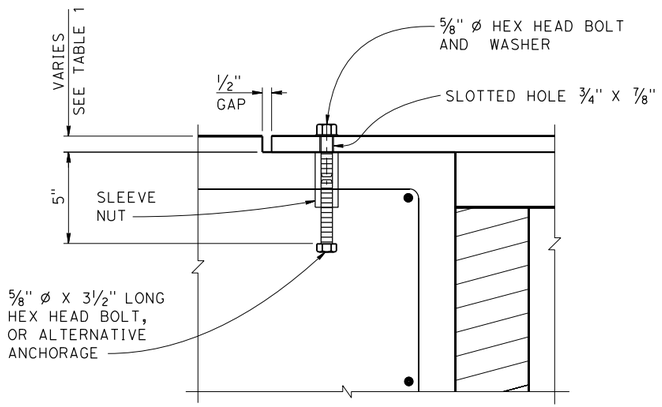

DETAIL H

THE CONTRACTOR SHALL VERIFY ALL CONTROLLING FIELD DIMENSIONS BEFORE ORDERING OR FABRICATING ANY MATERIAL

Dist	COUNTY	ROUTE	POST MILES TOTAL PROJECT	SHEET No.	TOTAL SHEETS
04	SCL	101,237	45.2/45.8, 2.7/3.3	93	736

REGISTERED CIVIL ENGINEER — 6-13-18 DATE

6-20-18
PLANS APPROVAL DATE

STEVE LOUPE No. 63575 Exp. 9/30/18 CIVIL — REGISTERED PROFESSIONAL ENGINEER — STATE OF CALIFORNIA

THE STATE OF CALIFORNIA OR ITS OFFICERS OR AGENTS SHALL NOT BE RESPONSIBLE FOR THE ACCURACY OR COMPLETENESS OF SCANNED COPIES OF THIS PLAN SHEET.

WMH CORPORATION
50 W San Fernando St
Suite 950
San Jose, CA 95113

VTA
3331 N First St
Building B
San Jose, Ca 95134

CONCRETE BARRIER TRANSITION DETAILS NO. 2

SCALE AS SHOWN

C-63

CALCULATED-DESIGNED BY	SHAWN VOGTMAN	
CHECKED BY	STEVE LOUPE	
CONSULTANT FUNCTIONAL SUPERVISOR	TIMOTHY J. LEE	
REVISED BY	SCV	
DATE REVISED	01/15/18	

STATE OF CALIFORNIA - DEPARTMENT OF TRANSPORTATION

LAST REVISION 01-15-18
DATE PLOTTED => 6/20/2018
TIME PLOTTED => 11:06:45 AM

X:\237_101_Mathilda\000_CAD\Sheets\GA-Const_Details\0413000204ga063.dgn

BORDER LAST REVISED 7/2/2010 | USERNAME => Eilif | DGN FILE => 0413000204ga063.dgn | RELATIVE BORDER SCALE IS IN INCHES 0 1 2 3 | UNIT 0000 | PROJECT NUMBER & PHASE 0413000204

Dist	COUNTY	ROUTE	POST MILES TOTAL PROJECT	SHEET No.	TOTAL SHEETS
04	SCL	101,237	45.2/45.8, 2.7/3.3	94	736

6-13-18
REGISTERED CIVIL ENGINEER — DATE

6-20-18
PLANS APPROVAL DATE

REGISTERED PROFESSIONAL ENGINEER — STEVE LOUPE — No. 63575 — Exp. 9/30/18 — CIVIL — STATE OF CALIFORNIA

THE STATE OF CALIFORNIA OR ITS OFFICERS OR AGENTS SHALL NOT BE RESPONSIBLE FOR THE ACCURACY OR COMPLETENESS OF SCANNED COPIES OF THIS PLAN SHEET.

WMH CORPORATION 50 W San Fernando St Suite 950 San Jose, CA 95113	VTA 3331 N First St Building B San Jose, Ca 95134

NOTE:

THESE PLANS PROVIDE MINIMUM LEVELS OF TEMPORARY WATER POLLUTION CONTROL DURING THE CONTRUCTION OF THE PROJECT. ADJUSTMENTS/MODIFICATIONS SHALL BE MADE TO ADDRESS ACTUAL SITE CONDITIONS AS DIRECTED BY THE ENGINEER.

LEGEND:

WASH — CONCRETE WASHOUT

Temp DRAINAGE INLET PROTECTION (TYPE 6A) PER CALTRANS STD PLAN T64

// TFR // — Temp FIBER ROLL (TYPE 1) PER CALTRANS STD PLAN T56

Temp REINFORCED SILT FENCE (TYPE 1) PER CALTRANS STD PLAN T60

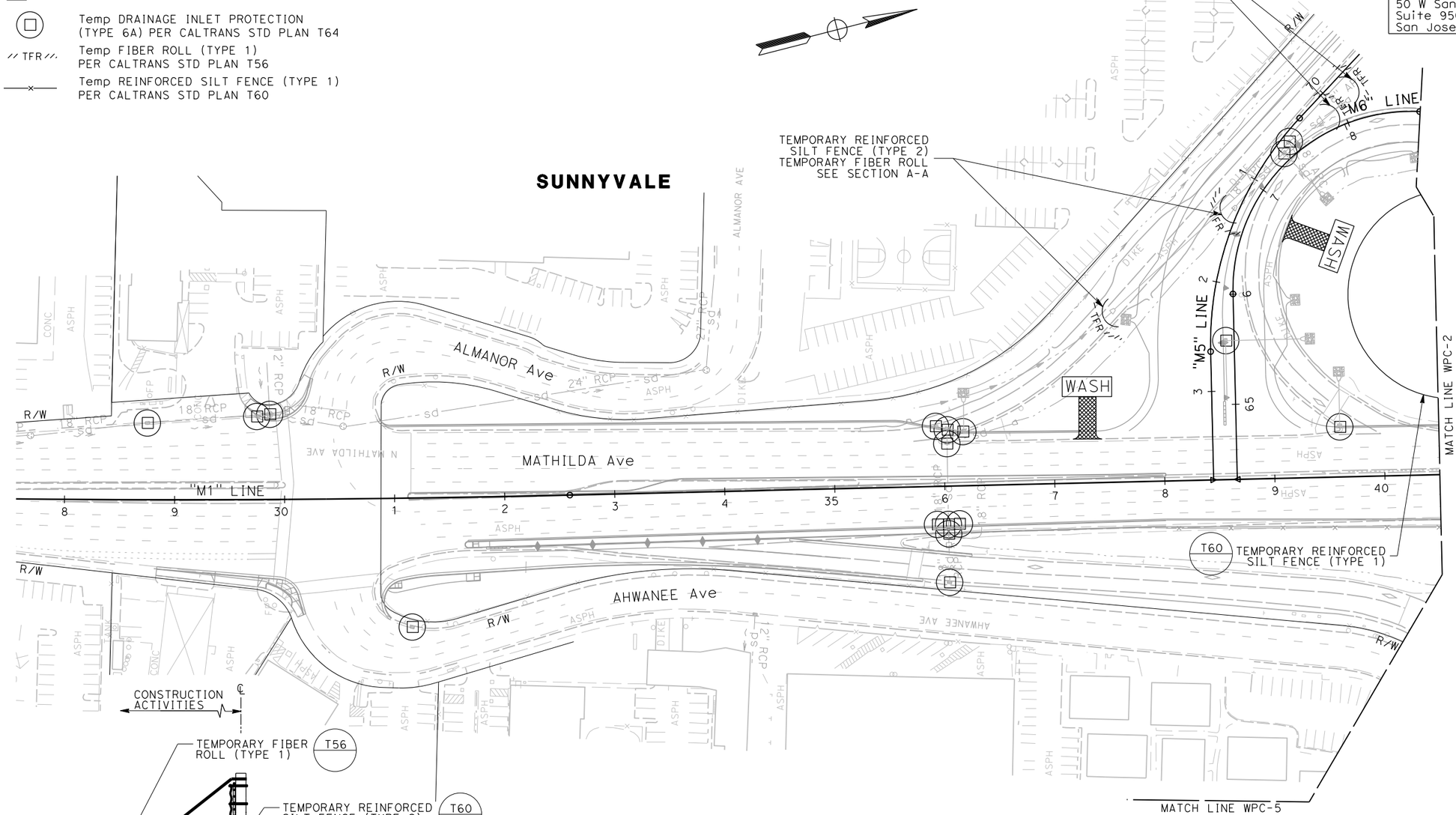

SECTION A-A

APPROVED FOR WATER POLLUTION CONTROL WORK ONLY

TEMPORARY WATER POLLUTION CONTROL PLAN

SCALE: 1" = 50'

WPC-1

STATE OF CALIFORNIA - DEPARTMENT OF TRANSPORTATION	CONSULTANT FUNCTIONAL SUPERVISOR	TIMOTHY J. LEE	
	CALCULATED-DESIGNED BY	CARLOS RODRIGUEZ	
	CHECKED BY	STEVE LOUPE	
	REVISED BY	DATE REVISED	

LAST REVISION 01-15-18 — DATE PLOTTED => 6/20/2018 — TIME PLOTTED => 11:07:47 AM

X:\Y237_101_Mathilda\000_CAD\Sheets\GB-Water_Pollution_Control\GB-Plans\0413000204gb001.dgn

BORDER LAST REVISED 7/2/2010 | USERNAME => Eilif | DGN FILE => 0413000204gb001.dgn | RELATIVE BORDER SCALE IS IN INCHES 0 1 2 3 | UNIT 0000 | PROJECT NUMBER & PHASE 0413000204

Dist	COUNTY	ROUTE	POST MILES TOTAL PROJECT	SHEET No.	TOTAL SHEETS
04	SCL	101,237	45.2/45.8, 2.7/3.3	95	736

6-13-18
REGISTERED CIVIL ENGINEER — DATE

6-20-18
PLANS APPROVAL DATE

REGISTERED PROFESSIONAL ENGINEER — STEVE LOUPE — No. 63575 — Exp. 9/30/18 — CIVIL — STATE OF CALIFORNIA

THE STATE OF CALIFORNIA OR ITS OFFICERS OR AGENTS SHALL NOT BE RESPONSIBLE FOR THE ACCURACY OR COMPLETENESS OF SCANNED COPIES OF THIS PLAN SHEET.

WMH CORPORATION
50 W San Fernando St
Suite 950
San Jose, CA 95113

VTA
3331 N First St
Building B
San Jose, Ca 95134

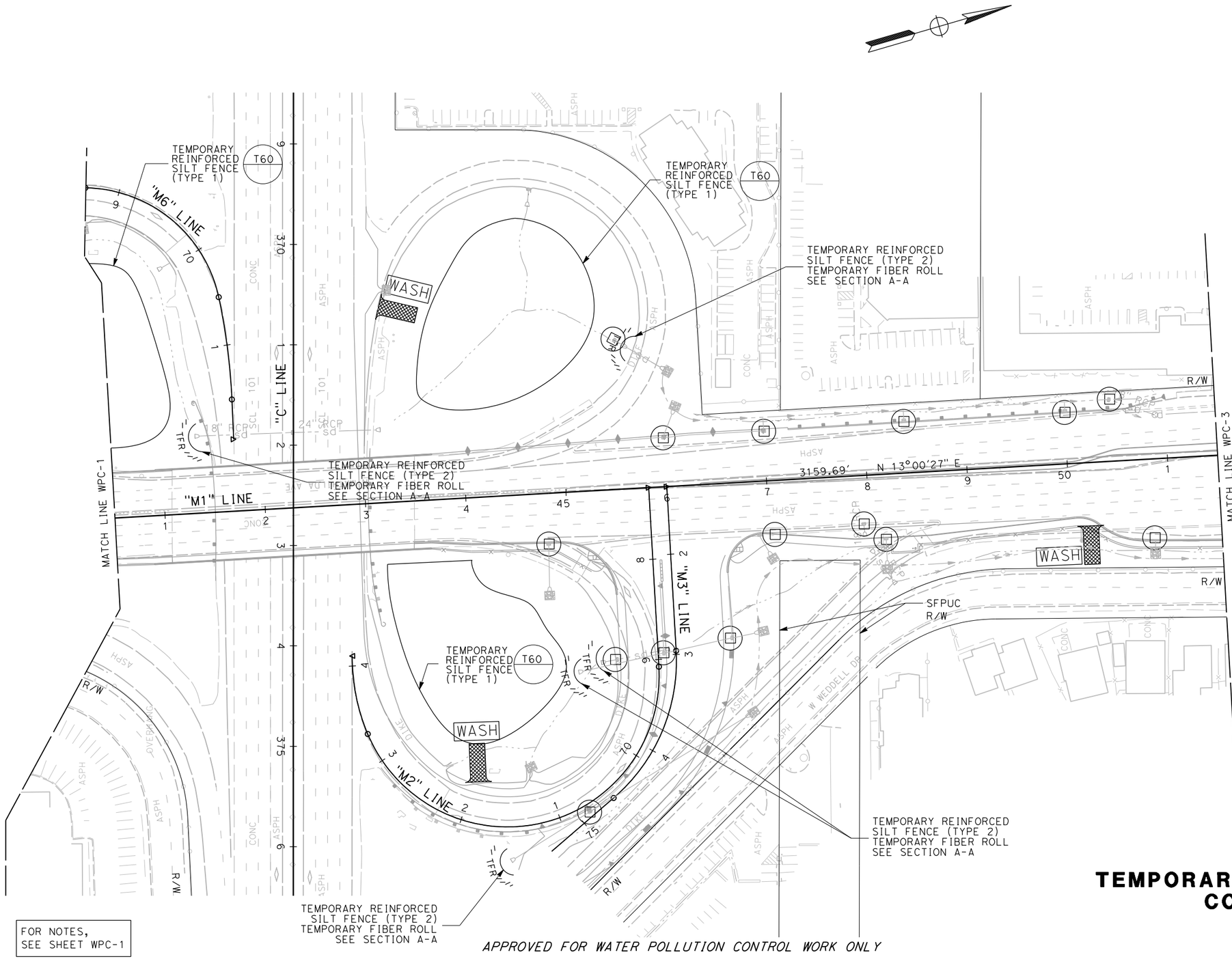

FOR NOTES, SEE SHEET WPC-1

APPROVED FOR WATER POLLUTION CONTROL WORK ONLY

TEMPORARY WATER POLLUTION CONTROL PLAN

SCALE: 1" = 50'

WPC-2

CALCULATED-DESIGNED BY	CHECKED BY	REVISED BY	DATE REVISED
CARLOS RODRIGUEZ	STEVE LOUPE		

STATE OF CALIFORNIA - DEPARTMENT OF TRANSPORTATION
Caltrans®
CONSULTANT FUNCTIONAL SUPERVISOR: TIMOTHY J. LEE

LAST REVISION: DATE PLOTTED => 6/20/2018; TIME PLOTTED => 11:07:49 AM
01-15-18

X:\237_101_Mathilda\000_CAD\Sheets\VGB-Water_Pollution_Control\VGB-Plans\0413000204gb002.dgn

BORDER LAST REVISED 7/2/2010 | USERNAME => Eilif; DGN FILE => 0413000204gb002.dgn | RELATIVE BORDER SCALE IS IN INCHES 0 1 2 3 | UNIT 0000 | PROJECT NUMBER & PHASE 0413000204

Dist	COUNTY	ROUTE	POST MILES TOTAL PROJECT	SHEET No.	TOTAL SHEETS
04	SCL	101,237	45.2/45.8, 2.7/3.3	96	736

REGISTERED CIVIL ENGINEER 6-13-18 DATE

6-20-18
PLANS APPROVAL DATE

REGISTERED PROFESSIONAL ENGINEER STEVE LOUPE No. 63575 Exp. 9/30/18 CIVIL STATE OF CALIFORNIA

THE STATE OF CALIFORNIA OR ITS OFFICERS OR AGENTS SHALL NOT BE RESPONSIBLE FOR THE ACCURACY OR COMPLETENESS OF SCANNED COPIES OF THIS PLAN SHEET.

WMH CORPORATION
50 W San Fernando St
Suite 950
San Jose, CA 95113

VTA
3331 N First St
Building B
San Jose, Ca 95134

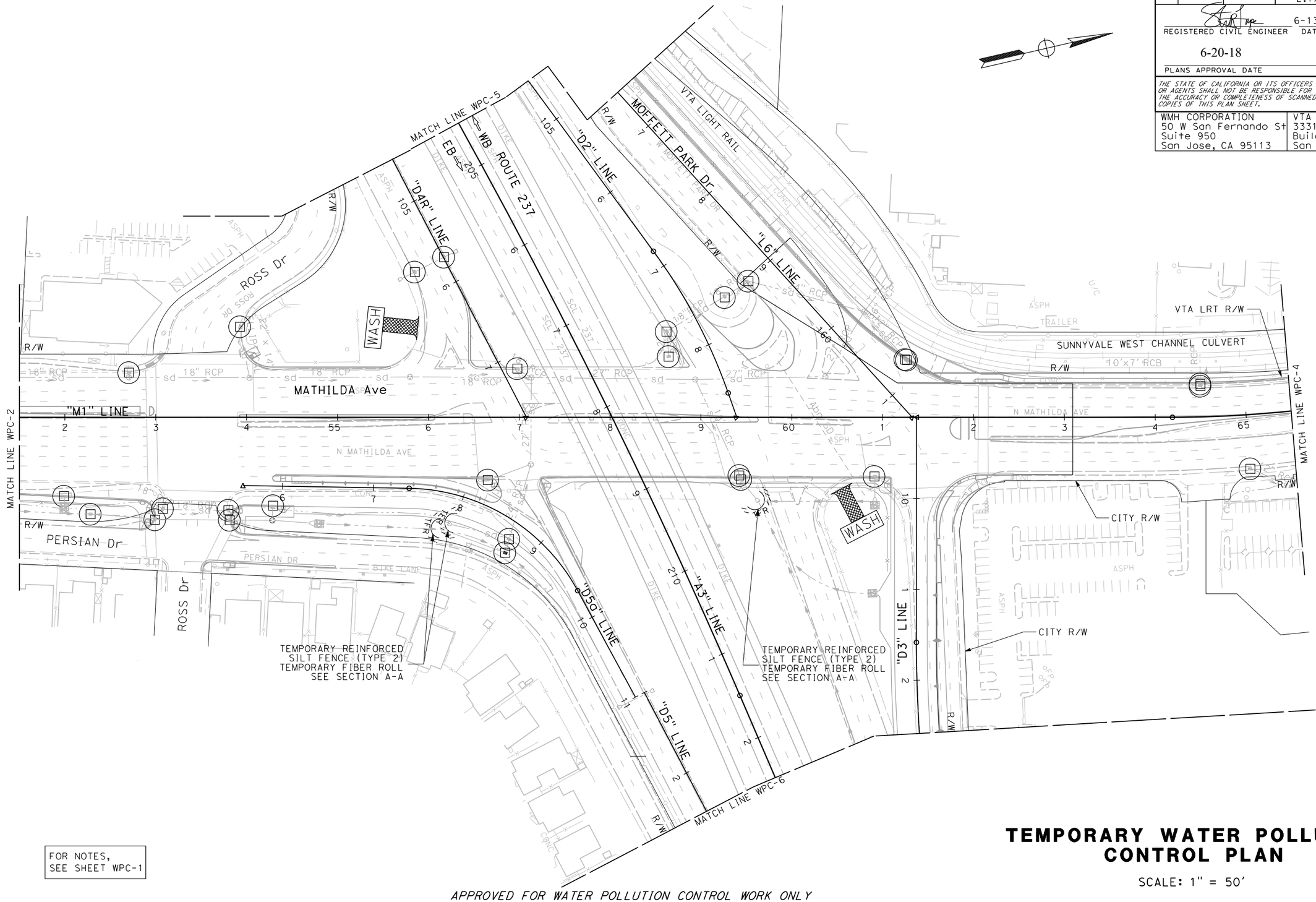

FOR NOTES, SEE SHEET WPC-1

APPROVED FOR WATER POLLUTION CONTROL WORK ONLY

TEMPORARY WATER POLLUTION CONTROL PLAN

SCALE: 1" = 50'

WPC-3

STATE OF CALIFORNIA - DEPARTMENT OF TRANSPORTATION
Caltrans

CONSULTANT FUNCTIONAL SUPERVISOR: TIMOTHY J. LEE
CALCULATED-DESIGNED BY: CARLOS RODRIGUEZ
CHECKED BY: STEVE LOUPE
REVISED BY
DATE REVISED

X:\237_101_Mathilda\000_CAD\Sheets\GB-Water_Pollution_Control\GB-Plans\0413000204gb003.dgn

LAST REVISION 01-15-18
DATE PLOTTED => 6/20/2018
TIME PLOTTED => 11:07:53 AM

BORDER LAST REVISED 7/2/2010
USERNAME => Eilif
DGN FILE => 0413000204gb003.dgn
RELATIVE BORDER SCALE IS IN INCHES 0 1 2 3
UNIT 0000
PROJECT NUMBER & PHASE 0413000204

Dist	COUNTY	ROUTE	POST MILES TOTAL PROJECT	SHEET No.	TOTAL SHEETS
04	SCL	101,237	45.2/45.8, 2.7/3.3	97	736

REGISTERED CIVIL ENGINEER — DATE: 6-13-18

STEVE LOUPE No. 63575 Exp. 9/30/18 CIVIL — REGISTERED PROFESSIONAL ENGINEER — STATE OF CALIFORNIA

6-20-18
PLANS APPROVAL DATE

THE STATE OF CALIFORNIA OR ITS OFFICERS OR AGENTS SHALL NOT BE RESPONSIBLE FOR THE ACCURACY OR COMPLETENESS OF SCANNED COPIES OF THIS PLAN SHEET.

WMH CORPORATION 50 W San Fernando St Suite 950 San Jose, CA 95113	VTA 3331 N First St Building B San Jose, Ca 95134

P/L
TEMPORARY REINFORCED SILT FENCE TYPE I
TEMPORARY FIBER ROLL TYPE I
TOB
0.5'
SUNNYVALE WEST CHANNEL

SECTION A-A
NOT TO SCALE

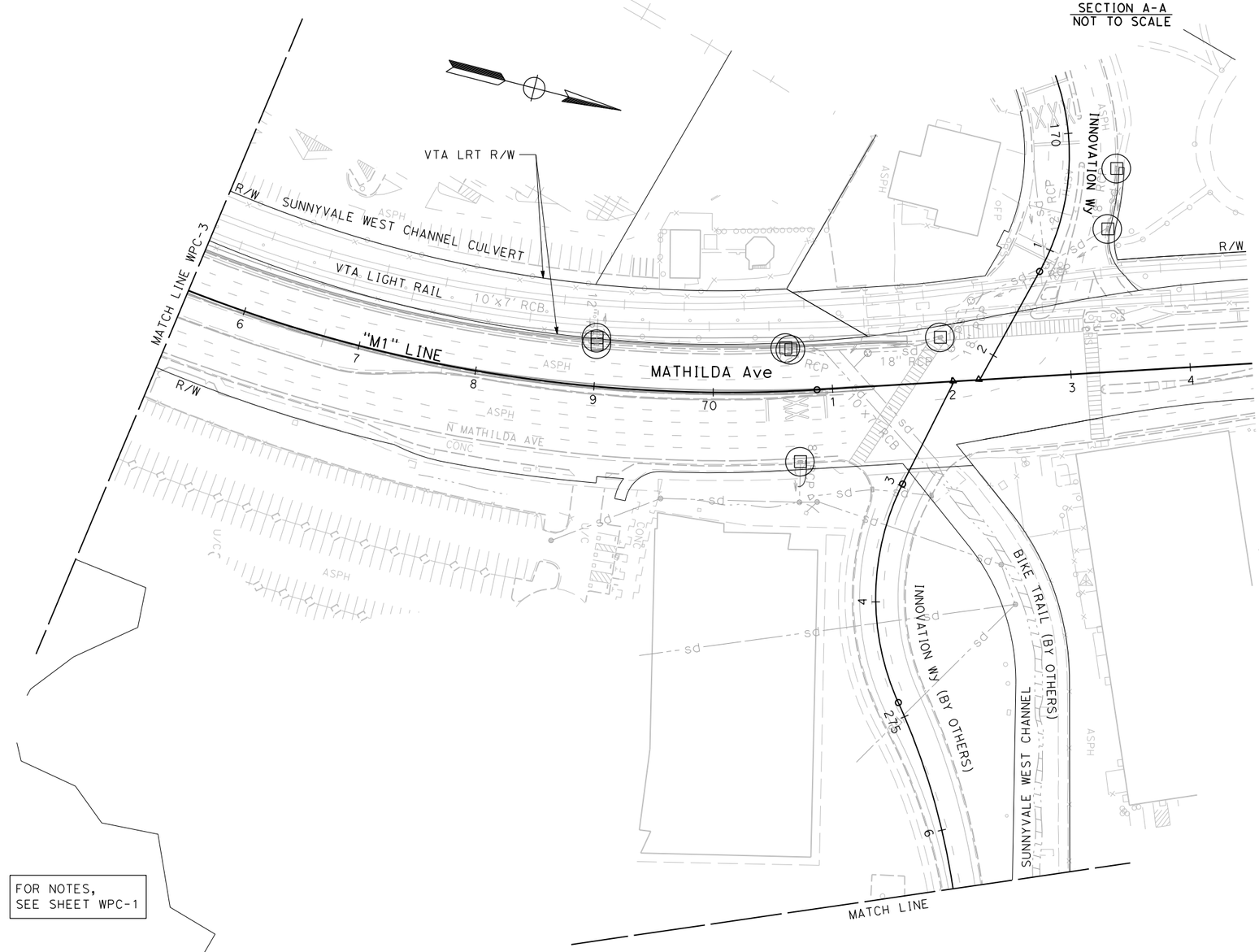

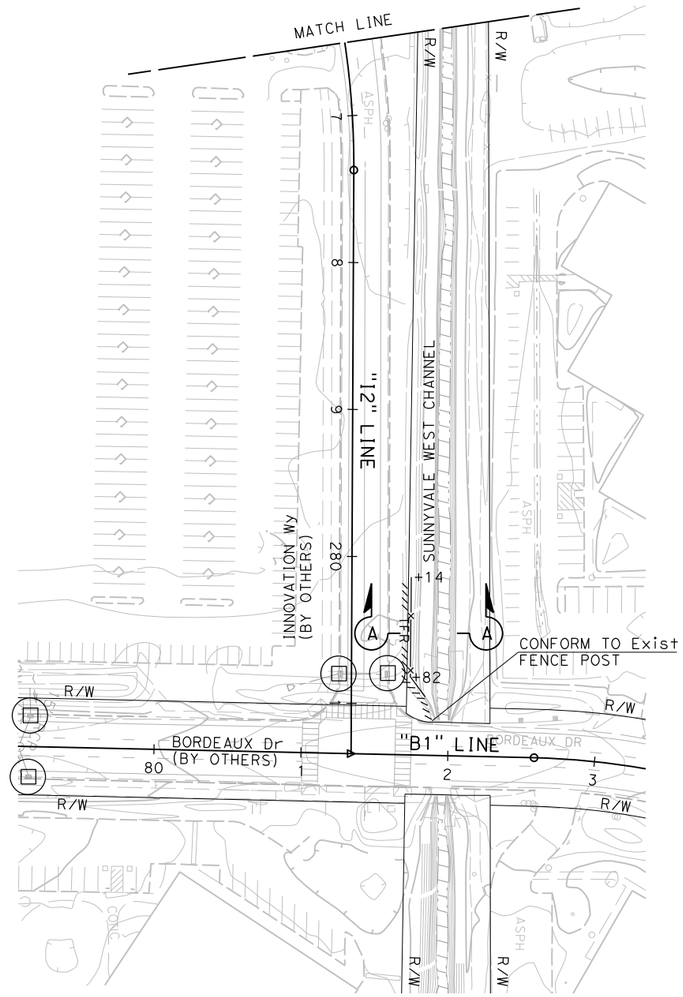

TEMPORARY WATER POLLUTION CONTROL PLAN

SCALE: 1" = 50'

APPROVED FOR WATER POLLUTION CONTROL WORK ONLY

WPC-4

STATE OF CALIFORNIA - DEPARTMENT OF TRANSPORTATION	CONSULTANT FUNCTIONAL SUPERVISOR: TIMOTHY J. LEE	CALCULATED-DESIGNED BY: CARLOS RODRIGUEZ	REVISED BY
Caltrans		CHECKED BY: STEVE LOUPE	DATE REVISED

X:\237_101_Mathilda\000_CAD\Sheets\GB-Water_Pollution_Control\GB-Plans\0413000204gb004.dgn

LAST REVISION: 01-15-18
DATE PLOTTED => 6/20/2018
TIME PLOTTED => 11:07:55 AM

BORDER LAST REVISED 7/2/2010 | USERNAME => Eilif | DGN FILE => 0413000204gb004.dgn | RELATIVE BORDER SCALE IS IN INCHES 0 1 2 3 | UNIT 0000 | PROJECT NUMBER & PHASE 0413000204

Dist	COUNTY	ROUTE	POST MILES TOTAL PROJECT	SHEET No.	TOTAL SHEETS
04	SCL	101,237	45.2/45.8, 2.7/3.3	98	736

6-13-18
REGISTERED CIVIL ENGINEER — DATE

6-20-18
PLANS APPROVAL DATE

REGISTERED PROFESSIONAL ENGINEER — STEVE LOUPE — No. 63575 — Exp. 9/30/18 — CIVIL — STATE OF CALIFORNIA

THE STATE OF CALIFORNIA OR ITS OFFICERS OR AGENTS SHALL NOT BE RESPONSIBLE FOR THE ACCURACY OR COMPLETENESS OF SCANNED COPIES OF THIS PLAN SHEET.

WMH CORPORATION
50 W San Fernando St
Suite 950
San Jose, CA 95113

VTA
3331 N First St
Building B
San Jose, Ca 95134

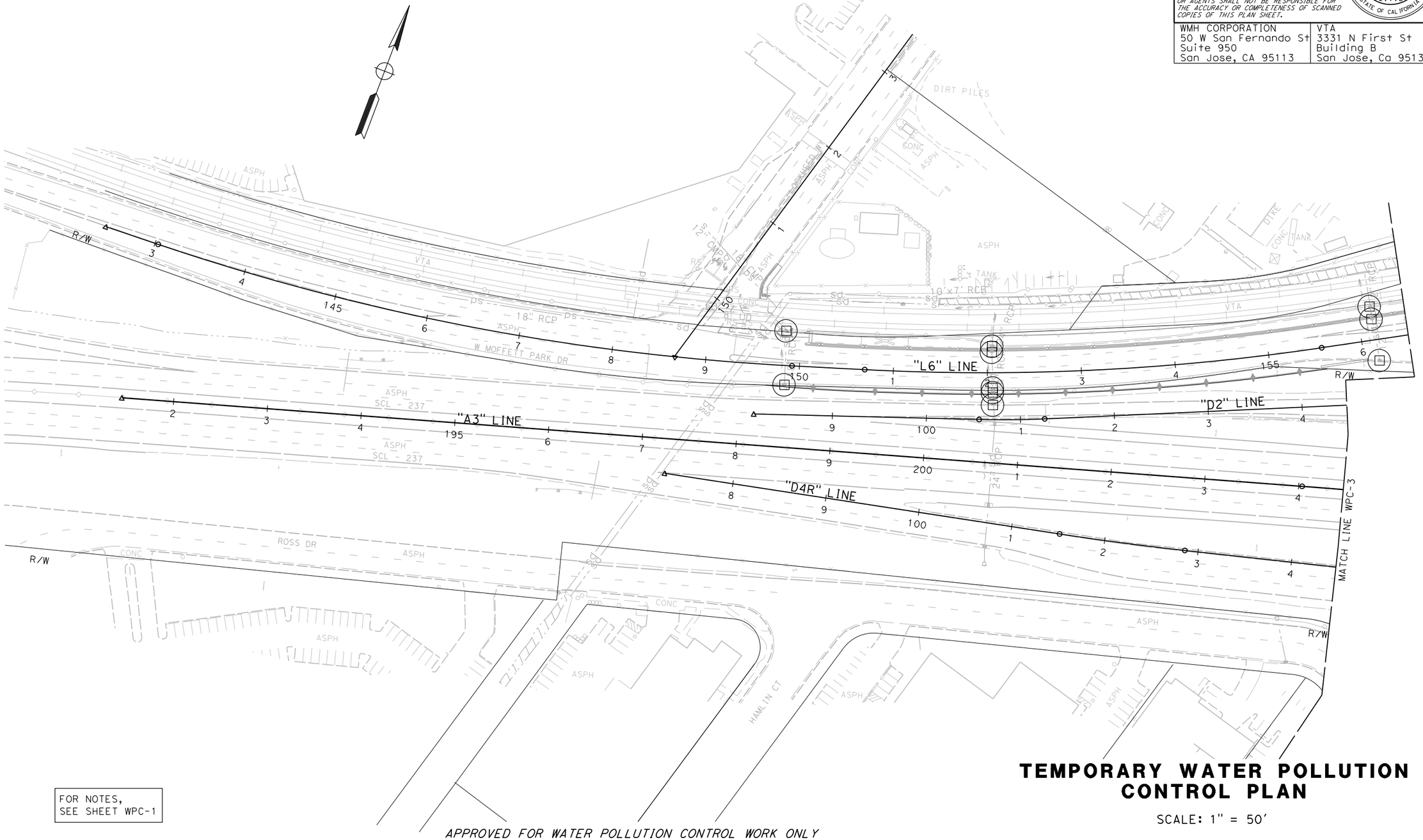

FOR NOTES, SEE SHEET WPC-1

APPROVED FOR WATER POLLUTION CONTROL WORK ONLY

TEMPORARY WATER POLLUTION CONTROL PLAN

SCALE: 1" = 50'

WPC-5

STATE OF CALIFORNIA - DEPARTMENT OF TRANSPORTATION
Caltrans®

CONSULTANT FUNCTIONAL SUPERVISOR: TIMOTHY J. LEE
CALCULATED-DESIGNED BY: CARLOS RODRIGUEZ
CHECKED BY: STEVE LOUPE
REVISED BY | DATE REVISED

LAST REVISION: DATE PLOTTED => 6/20/2018, TIME PLOTTED => 11:07:57 AM

X:\237_101_Mathilda\000_CAD\Sheets\GB-Water Pollution Control\GB-Plans\0413000204gb005.dgn

BORDER LAST REVISED 7/2/2010 | USERNAME => Eilif | DGN FILE => 0413000204gb005.dgn | RELATIVE BORDER SCALE IS IN INCHES 0 1 2 3 | UNIT 0000 | PROJECT NUMBER & PHASE 0413000204

Dist	COUNTY	ROUTE	POST MILES TOTAL PROJECT	SHEET No.	TOTAL SHEETS
04	SCL	101,237	45.2/45.8, 2.7/3.3	99	736

6-13-18
REGISTERED CIVIL ENGINEER DATE

6-20-18
PLANS APPROVAL DATE

REGISTERED PROFESSIONAL ENGINEER
STEVE LOUPE
No. 63575
Exp. 9/30/18
CIVIL
STATE OF CALIFORNIA

THE STATE OF CALIFORNIA OR ITS OFFICERS OR AGENTS SHALL NOT BE RESPONSIBLE FOR THE ACCURACY OR COMPLETENESS OF SCANNED COPIES OF THIS PLAN SHEET.

WMH CORPORATION
50 W San Fernando St
Suite 950
San Jose, CA 95113

VTA
3331 N First St
Building B
San Jose, Ca 95134

CALCULATED-DESIGNED BY: CARLOS RODRIGUEZ
CHECKED BY: STEVE LOUPE
CONSULTANT FUNCTIONAL SUPERVISOR: TIMOTHY J. LEE
REVISED BY | DATE REVISED

STATE OF CALIFORNIA - DEPARTMENT OF TRANSPORTATION
Caltrans

X:\237_101_Mathilda\000_CAD\Sheets\GB-Water_Pollution_Control\GB-Plans\04130002O4gb006.dgn

CITY R/W
CITY R/W
STORAGE
MOFFETT PARK Dr
WASH
MATCH LINE WPC-3
"D3" LINE
"D5" LINE
"A3" LINE
WB
EB
ROUTE 237
PERSIAN Dr
BRADFORD Dr
PLAZA Dr
BORREGAS Ave
R/W
ASPH
CONC
DIKE
BIKE LANE
SCL - 237
18" RCP
8" RCP
SD

FOR NOTES, SEE SHEET WPC-1

TEMPORARY WATER POLLUTION CONTROL PLAN

SCALE: 1" = 50'

APPROVED FOR WATER POLLUTION CONTROL WORK ONLY

WPC-6

LAST REVISION: DATE PLOTTED => 6/20/2018
01-15-18 TIME PLOTTED => 11:08:00 AM

BORDER LAST REVISED 7/2/2010 | USERNAME => Eilif | DGN FILE => 0413000204gb006.dgn | RELATIVE BORDER SCALE IS IN INCHES 0 1 2 3 | UNIT 0000 | PROJECT NUMBER & PHASE 0413000204

Dist	COUNTY	ROUTE	POST MILES TOTAL PROJECT	SHEET No.	TOTAL SHEETS
04	SCL	101,237	45.2/45.8, 2.7/3.3	100	736

REGISTERED CIVIL ENGINEER — DATE: 6-13-18

6-20-18
PLANS APPROVAL DATE

REGISTERED PROFESSIONAL ENGINEER — STEVE LOUPE — No. 63575 — Exp. 9/30/18 — CIVIL — STATE OF CALIFORNIA

THE STATE OF CALIFORNIA OR ITS OFFICERS OR AGENTS SHALL NOT BE RESPONSIBLE FOR THE ACCURACY OR COMPLETENESS OF SCANNED COPIES OF THIS PLAN SHEET.

WMH CORPORATION
50 W San Fernando St
Suite 950
San Jose, CA 95113

VTA
3331 N First St
Building B
San Jose, Ca 95134

WATER POLLUTION CONTROL

SHEET No.	TEMPORARY DRAINAGE INLET PROTECTION	TEMPORARY FIBER ROLL	TEMPORARY REINFORCED SILT FENCE		TEMPORARY CONSTRUCTION ENTRANCE	MOVE-IN / MOVE OUT (TEMPORARY EROSION CONTROL)
			(TYPE 1)	(TYPE 2)		
	EA	LF			EA	
WPC-1	17	240	260	160	2	2
WPC-2	15	300	1420	200	3	3
WPC-3	27	180		120	2	2
WPC-4	12	104	86			
WPC-5	10					
WPC-6	7				1	1
TOTAL	88	824	2246		8	8

APPROVED FOR WATER POLLUTION CONTROL WORK ONLY

TEMPORARY WATER POLLUTION CONTROL QUANTITIES

NO SCALE

WPCQ-1

CALCULATED-DESIGNED BY	CARLOS RODRIGUEZ	REVISED BY			
CHECKED BY	STEVE LOUPE	DATE REVISED			
CONSULTANT FUNCTIONAL SUPERVISOR	TIMOTHY J. LEE				
STATE OF CALIFORNIA - DEPARTMENT OF TRANSPORTATION					

LAST REVISION 01-15-18 — DATE PLOTTED => 6/20/2018 — TIME PLOTTED => 11:08:26 AM

X:\237_101_Mathilda\000_CAD\Sheets\GB-Water_Pollution_Control\GD-Quantities\0413000204gd001.dgn

BORDER LAST REVISED 7/2/2010 | USERNAME => Eilif | DGN FILE => 0413000204gd001.dgn | RELATIVE BORDER SCALE IS IN INCHES 0 1 2 3 | UNIT 0000 | PROJECT NUMBER & PHASE 0413000204

Dist	COUNTY	ROUTE	POST MILES TOTAL PROJECT	SHEET No.	TOTAL SHEETS
04	SCL	101,237	45.2/45.8, 2.7/3.3	101	736

REGISTERED CIVIL ENGINEER — 6-13-18 DATE

PLANS APPROVAL DATE — 6-20-18

REGISTERED PROFESSIONAL ENGINEER — STEVE LOUPE — No. 63575 — Exp. 9/30/18 — CIVIL — STATE OF CALIFORNIA

THE STATE OF CALIFORNIA OR ITS OFFICERS OR AGENTS SHALL NOT BE RESPONSIBLE FOR THE ACCURACY OR COMPLETENESS OF SCANNED COPIES OF THIS PLAN SHEET.

WMH CORPORATION 50 W San Fernando St Suite 950 San Jose, CA 95113	VTA 3331 N First St Building B San Jose, Ca 95134

NOTES:

1. FOR ACCURATE RIGHT OF WAY DATA, CONTACT RIGHT OF WAY ENGINEERING AT THE DISTRICT OFFICE.
2. CONTRACTOR IS RESPONSIBLE FOR PROVIDING POSITIVE DRAINAGE FROM ALL ROADWAY AREAS AT ALL TIMES TO PREVENT FLOODING.
3. LOCATIONS OF EXISTING DRAINAGE FACILITIES ARE APPROXIMATE. VERIFY LOCATION AND ELAVATION OF EXISTING DRAINAGE FACILITIES PRIOR TO MODIFYING.
4. STATION AND OFFSET TIES FOR DRAINAGE STRUCTURES ARE MEASURED PER DRAINAGE DETAILS ON SHEET DD-1.

LEGEND:

- (No.) DRAINAGE SYSTEM NUMBER
- (XX) DRAINAGE ITEM
- ROCK SLOPE PROTECTION
- BIOSWALE
- DITCH FLOW LINE

ABBREVIATIONS:

SGD	STANDARD GUTTER DEPRESSION
DA	DEPRESSED APRON
LMCB	LIMITS OF MINOR CONCRETE BACKFILL
Rem	REMOVE
GLD	GRATED LINE DRAIN

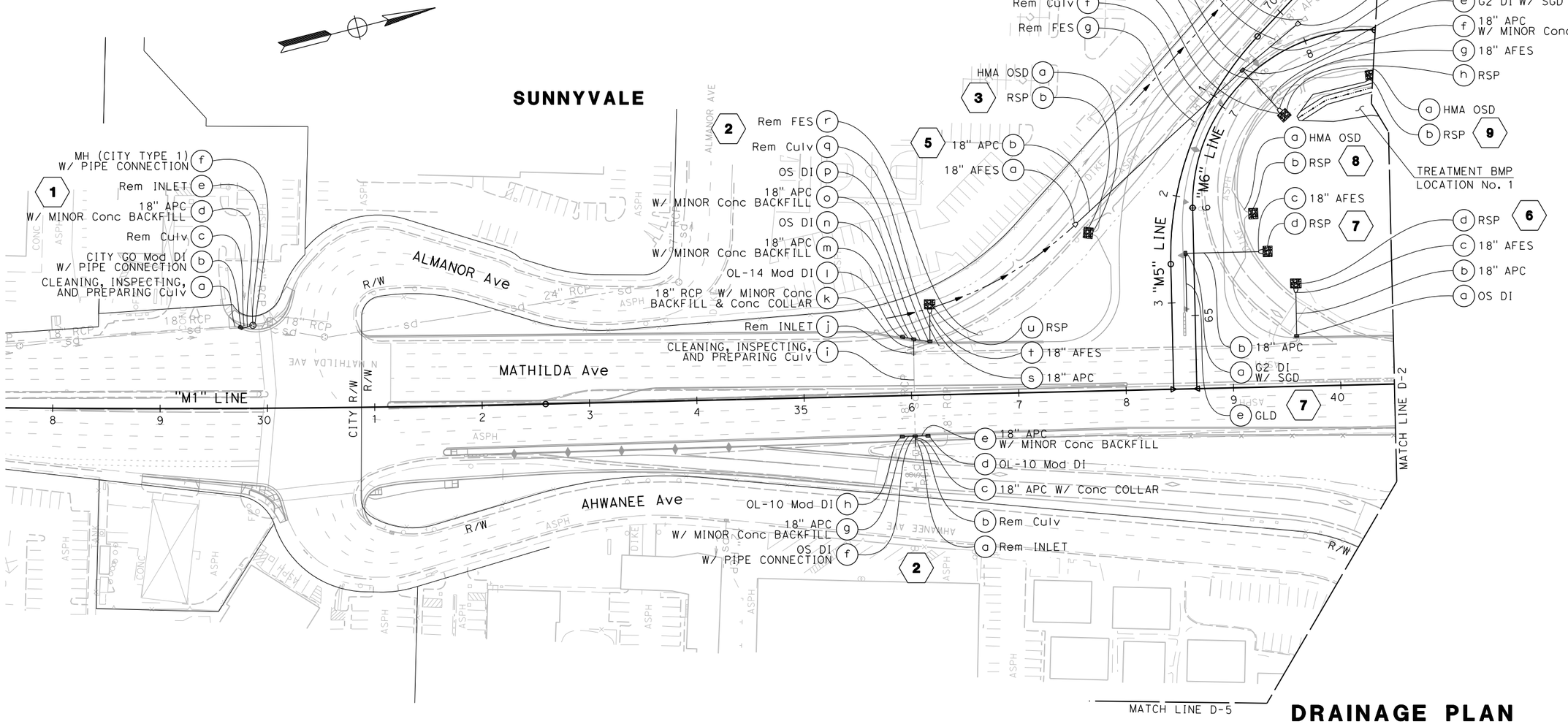

APPROVED FOR DRAINAGE WORK ONLY

DRAINAGE PLAN

SCALE: 1" = 50'

D-1

CALCULATED-DESIGNED BY	CARLOS RODRIGUEZ SCOTT DWYER	REVISED BY	SMD
CHECKED BY	STEVE LOUPE	DATE REVISED	05/03/18
CONSULTANT FUNCTIONAL SUPERVISOR	TIMOTHY J. LEE		
STATE OF CALIFORNIA - DEPARTMENT OF TRANSPORTATION	Caltrans		

LAST REVISION: DATE PLOTTED => 6/20/2018
01-15-18 TIME PLOTTED => 11:09:00 AM

X:\237_101_Mathilda\000_CAD\Sheets\1A-Drainage\1A-Plans\0413000204ia001.dgn

BORDER LAST REVISED 7/2/2010 | USERNAME => Eilif | DGN FILE => 0413000204ia001.dgn | RELATIVE BORDER SCALE IS IN INCHES 0 1 2 3 | UNIT 0000 | PROJECT NUMBER & PHASE 0413000204

Dist	COUNTY	ROUTE	POST MILES TOTAL PROJECT	SHEET No.	TOTAL SHEETS
04	SCL	101,237	45.2/45.8, 2.7/3.3	102	736

6-13-18
REGISTERED CIVIL ENGINEER — DATE

STEVE LOUPE No. 63575 Exp. 9/30/18 CIVIL — REGISTERED PROFESSIONAL ENGINEER — STATE OF CALIFORNIA

6-20-18
PLANS APPROVAL DATE

THE STATE OF CALIFORNIA OR ITS OFFICERS OR AGENTS SHALL NOT BE RESPONSIBLE FOR THE ACCURACY OR COMPLETENESS OF SCANNED COPIES OF THIS PLAN SHEET.

WMH CORPORATION 50 W San Fernando St Suite 950 San Jose, CA 95113	VTA 3331 N First St Building B San Jose, Ca 95134

FOR BASIN GRADING SEE DRAINAGE DETAILS

TREATMENT BMP LOCATION No. 1

TREATMENT BMP LOCATION No. 2

TREATMENT BMP LOCATION No. 3

"M1" LINE — MATHILDA Ave

"M2" LINE

"M3" LINE

"M4" LINE

"M5" LINE

"M6" LINE

"C" LINE

MATCH LINE D-1

MATCH LINE D-3

MATCH LINE D-5

63.88' Lt, "M1" +40.22
Beg Conc LINED DITCH
FL 27.60

61.49' Lt, "M1" +42.56
END Conc LINED DITCH
FL 26.12

10: Rem INLET (a), Rem Culv (b), Rem FES (c)

11: HMA OSD (a), RSP (b)

12: G2 Mod DI W/ 7" LOW FLOW ORIFICE (a), Rem FES (b), Rem Culv (c), 18" APC (d), Rem FES (e), 18" AFES (f), RSP (g)

13: RSP (e), 18" AFES (d), 18" APC (c), G1 DI (b), GLD (a)

14: GLD (a), G1 DI (b), 18" APC (c), Conc LINED DITCH (d)

15: Rem INLET (a), Rem Culv (b), Rem FES (c)

16: Conc LINED DITCH (c), 18" APC (b), OS DI (a)

17: Conc LINED DITCH (c), 18" APC (b), OS DI (a)

18: OS DI (a), 18" APC (b), 18" AFES (c), RSP (d)

19: RSP (b), HMA OSD (a)

20: 18" AFES (a), 18" APC (b), G2 DI W/ SGD (c), GLD (g)

21: G2 DI W/ SGD (j), 18" APC (k), 18" AFES (l), RSP (m), GLD (n), GLD (o)

21: 18" APC (i), Rem FES (h), G2 DI W/ SGD (g), Rem Culv (f), Rem INLET (e), Rem Culv (d), 18" APC (c), Rem FES (b), 18" AFES (a)

22: 18" APC (d), 18" AFES (e), RSP (f)

23: Rem FES (a), Rem Culv (b), Rem FES (c)

24: OS DI (a), 12" APC (b), 12" AFES (c), RSP (d)

25: RSP (b), 12" SW DRAIN (a)

FOR NOTES AND LEGEND, SEE SHEET D-1

APPROVED FOR DRAINAGE WORK ONLY

DRAINAGE PLAN

SCALE: 1" = 50'

D-2

CALCULATED-DESIGNED BY	CARLOS RODRIGUEZ SCOTT DWYER		
CHECKED BY	STEVE LOUPE		
CONSULTANT FUNCTIONAL SUPERVISOR	TIMOTHY J. LEE		
STATE OF CALIFORNIA - DEPARTMENT OF TRANSPORTATION		REVISED BY	SMD
Caltrans		DATE REVISED	05/03/18
		DAG	09/19/18

LAST REVISION 01-15-18
DATE PLOTTED => 9/20/2018
TIME PLOTTED => 12:02:50 PM

X:\237_101_Mathilda\000_CAD\Sheets\1A-Drainage\1A-Plans\0413000204ia002.dgn

BORDER LAST REVISED 7/2/2010 | USERNAME => Dianneg | DGN FILE => 0413000204ia002.dgn | RELATIVE BORDER SCALE IS IN INCHES 0 1 2 3 | UNIT 0000 | PROJECT NUMBER & PHASE 0413000204

Dist	COUNTY	ROUTE	POST MILES TOTAL PROJECT	SHEET No.	TOTAL SHEETS
04	SCL	101,237	45.2/45.8, 2.7/3.3	103	736

REGISTERED CIVIL ENGINEER — 6-13-18 DATE

6-20-18
PLANS APPROVAL DATE

REGISTERED PROFESSIONAL ENGINEER — STEVE LOUPE — No. 63575 — Exp. 9/30/18 — CIVIL — STATE OF CALIFORNIA

THE STATE OF CALIFORNIA OR ITS OFFICERS OR AGENTS SHALL NOT BE RESPONSIBLE FOR THE ACCURACY OR COMPLETENESS OF SCANNED COPIES OF THIS PLAN SHEET.

WMH CORPORATION 50 W San Fernando St Suite 950 San Jose, CA 95113	VTA 3331 N First St Building B San Jose, Ca 95134

REVISED BY	DATE REVISED
SMD	05/03/18

CALCULATED-DESIGNED BY: CARLOS RODRIGUEZ, SCOTT DWYER
CHECKED BY: STEVE LOUPE
DRAFTSUPERVISOR: TIMOTHY J. LEE
CONSULTANT FUNCTIONAL SUPERVISOR

STATE OF CALIFORNIA - DEPARTMENT OF TRANSPORTATION
Caltrans

X:\237_101_Mathilda\000_CAD\Sheets\1A-Drainage\1A-Plans\0413000204ia003.dgn

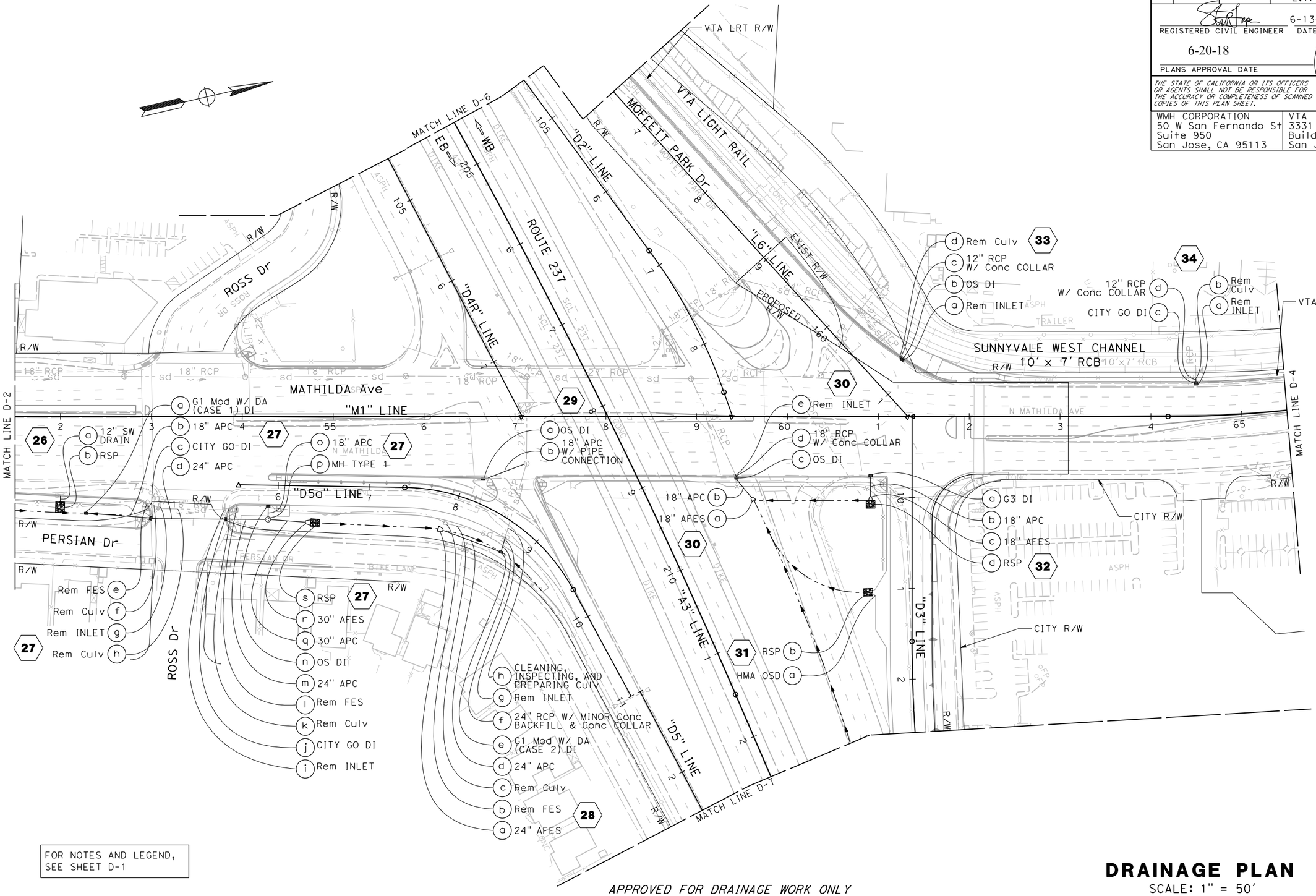

FOR NOTES AND LEGEND, SEE SHEET D-1

APPROVED FOR DRAINAGE WORK ONLY

DRAINAGE PLAN

SCALE: 1" = 50'

D-3

LAST REVISION	DATE PLOTTED => 6/20/2018 TIME PLOTTED => 11:09:04 AM
01-15-18	

BORDER LAST REVISED 7/2/2010 | USERNAME => Eilif, DGN FILE => 0413000204ia003.dgn | RELATIVE BORDER SCALE IS IN INCHES 0 1 2 3 | UNIT 0000 | PROJECT NUMBER & PHASE 0413000204

Dist	COUNTY	ROUTE	POST MILES TOTAL PROJECT	SHEET No.	TOTAL SHEETS
04	SCL	101,237	45.2/45.8, 2.7/3.3	104	736

REGISTERED CIVIL ENGINEER — 6-13-18 DATE

6-20-18
PLANS APPROVAL DATE

STEVE LOUPE No. 63575 Exp. 9/30/18 CIVIL — REGISTERED PROFESSIONAL ENGINEER — STATE OF CALIFORNIA

THE STATE OF CALIFORNIA OR ITS OFFICERS OR AGENTS SHALL NOT BE RESPONSIBLE FOR THE ACCURACY OR COMPLETENESS OF SCANNED COPIES OF THIS PLAN SHEET.

WMH CORPORATION
50 W San Fernando St
Suite 950
San Jose, CA 95113

VTA
3331 N First St
Building B
San Jose, Ca 95134

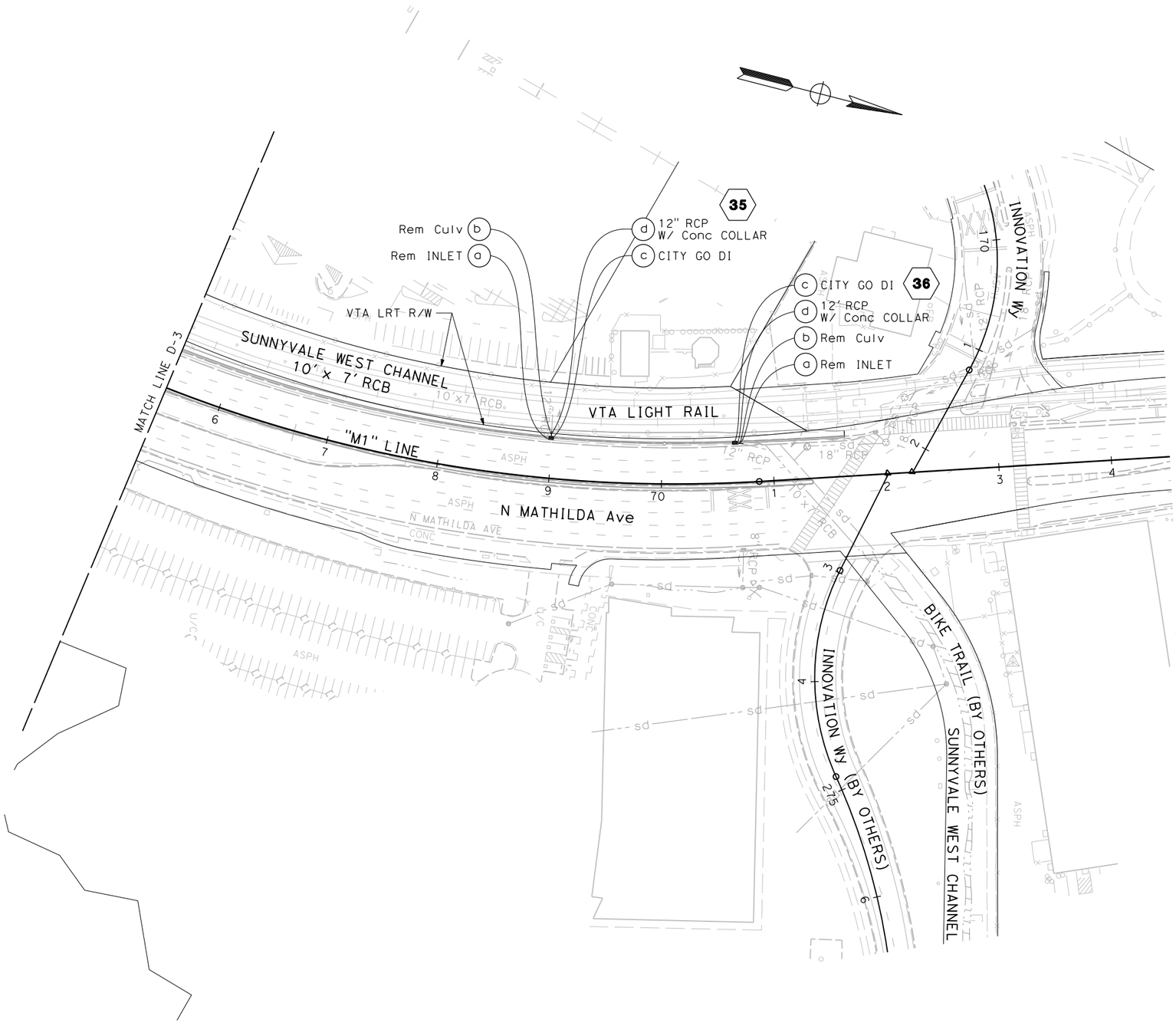

FOR NOTES AND LEGEND, SEE SHEET D-1

APPROVED FOR DRAINAGE WORK ONLY

DRAINAGE PLAN

SCALE: 1" = 50'

D-4

LAST REVISION	01-15-18
DATE PLOTTED =>	9/21/2018
TIME PLOTTED =>	12:27:32 PM

STATE OF CALIFORNIA - DEPARTMENT OF TRANSPORTATION	CONSULTANT FUNCTIONAL SUPERVISOR	TIMOTHY J. LEE	
	CALCULATED-DESIGNED BY	CARLOS RODRIGUEZ SCOTT DWYER	
	CHECKED BY	STEVE LOUPE	
	REVISED BY	SMD	
	DATE REVISED	05/03/18	

X:\237_101_Mathilda\000_CAD\Sheets\IA-Drainage\IA-Plans\04130002041a004.dgn

BORDER LAST REVISED 7/2/2010	USERNAME => rsagastume DGN FILE => 0413000204ia004.dgn	RELATIVE BORDER SCALE IS IN INCHES 0 1 2 3	UNIT 0000	PROJECT NUMBER & PHASE	0413000204

Dist	COUNTY	ROUTE	POST MILES TOTAL PROJECT	SHEET No.	TOTAL SHEETS
04	SCL	101,237	45.2/45.8, 2.7/3.3	105	736

REGISTERED CIVIL ENGINEER 6-13-18 DATE

6-20-18
PLANS APPROVAL DATE

REGISTERED PROFESSIONAL ENGINEER STEVE LOUPE No. 63575 Exp. 9/30/18 CIVIL STATE OF CALIFORNIA

THE STATE OF CALIFORNIA OR ITS OFFICERS OR AGENTS SHALL NOT BE RESPONSIBLE FOR THE ACCURACY OR COMPLETENESS OF SCANNED COPIES OF THIS PLAN SHEET.

WMH CORPORATION
50 W San Fernando St
Suite 950
San Jose, CA 95113

VTA
3331 N First St
Building B
San Jose, Ca 95134

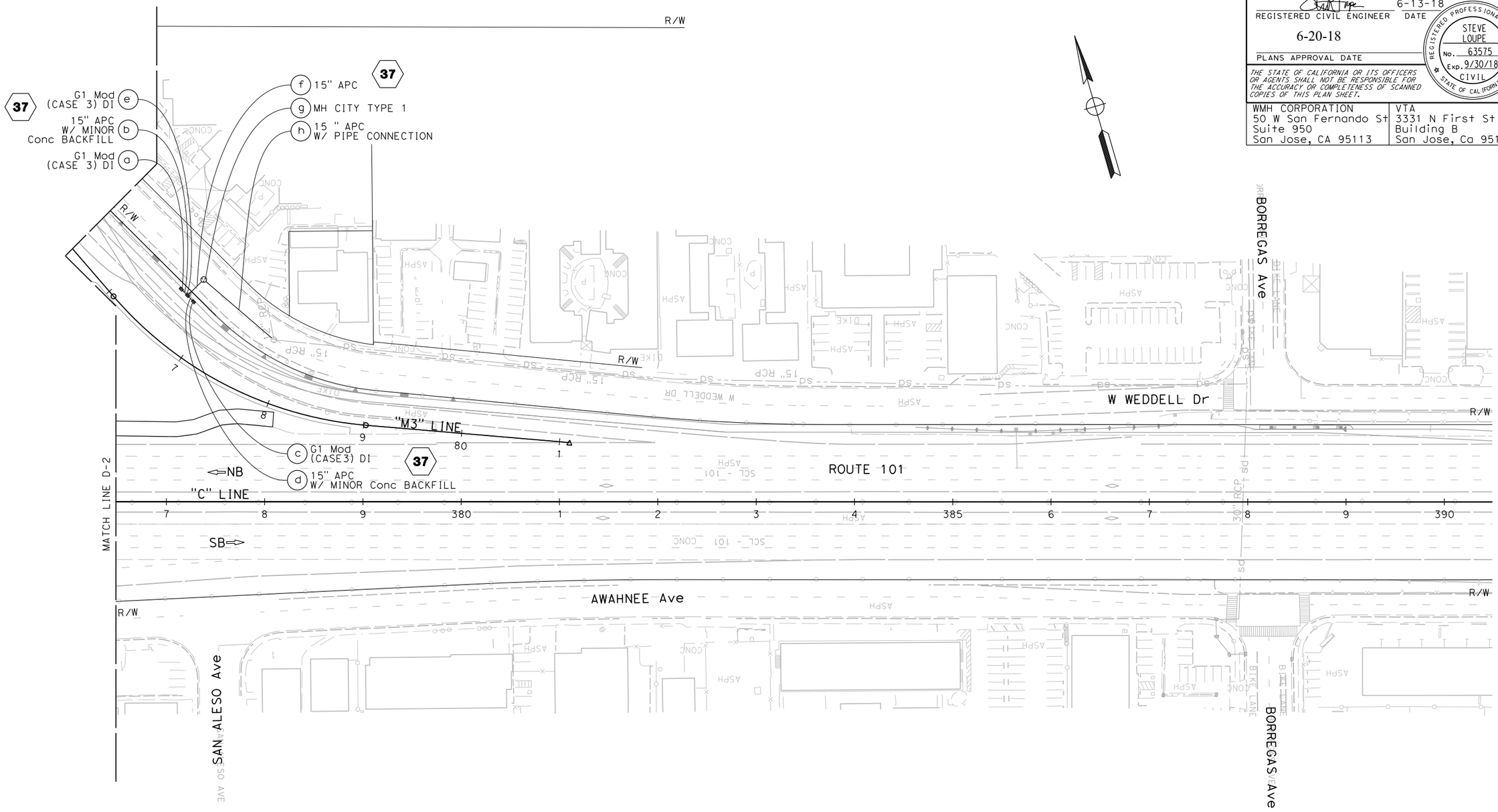

FOR NOTES AND LEGEND, SEE SHEET D-1

APPROVED FOR DRAINAGE WORK ONLY

DRAINAGE PLAN

SCALE: 1" = 50'

D-5

STATE OF CALIFORNIA - DEPARTMENT OF TRANSPORTATION
Caltrans

CONSULTANT FUNCTIONAL SUPERVISOR: TIMOTHY J. LEE
CALCULATED-DESIGNED BY: CARLOS RODRIGUEZ, SCOTT DWYER
CHECKED BY: STEVE LOUPE
REVISED BY: SMD
DATE REVISED: 05/03/18

X:\237_101_Mathilda\000_CAD\Sheets\IA-Drainage\IA-Plans\0413000204ia005.dgn

LAST REVISION 01-15-18
DATE PLOTTED => 6/20/2018
TIME PLOTTED => 11:09:10 AM

Dist	COUNTY	ROUTE	POST MILES TOTAL PROJECT	SHEET No.	TOTAL SHEETS
04	SCL	101,237	45.2/45.8, 2.7/3.3	105	736

REGISTERED CIVIL ENGINEER 6-13-18 DATE

6-20-18
PLANS APPROVAL DATE

REGISTERED PROFESSIONAL ENGINEER STEVE LOUPE No. 63575 Exp. 9/30/18 CIVIL STATE OF CALIFORNIA

THE STATE OF CALIFORNIA OR ITS OFFICERS OR AGENTS SHALL NOT BE RESPONSIBLE FOR THE ACCURACY OR COMPLETENESS OF SCANNED COPIES OF THIS PLAN SHEET.

WMH CORPORATION
50 W San Fernando St
Suite 950
San Jose, CA 95113

VTA
3331 N First St
Building B
San Jose, Ca 95134

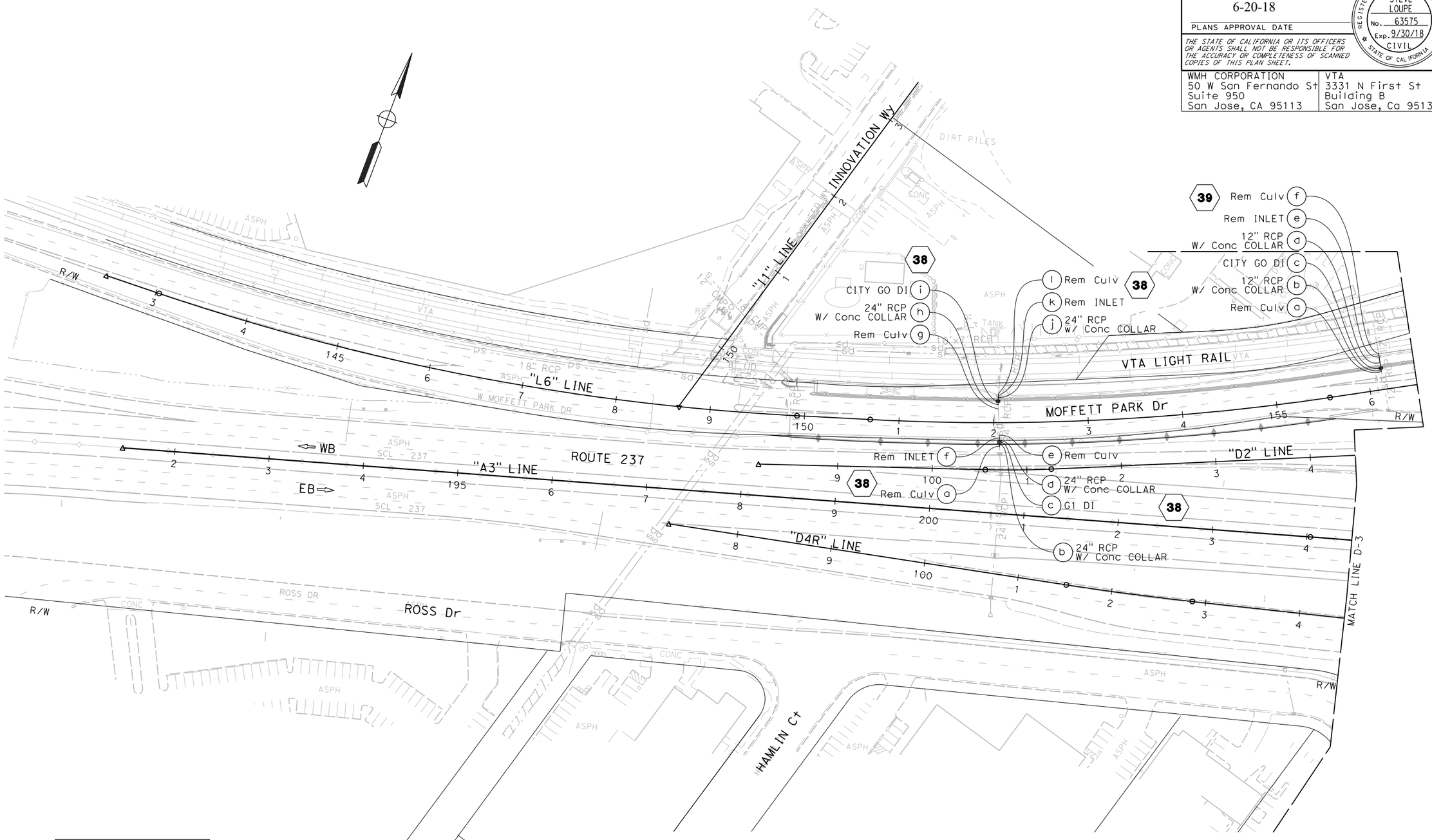

FOR NOTES AND LEGEND, SEE SHEET D-1

APPROVED FOR DRAINAGE WORK ONLY

DRAINAGE PLAN

SCALE: 1" = 50'

D-6

STATE OF CALIFORNIA - DEPARTMENT OF TRANSPORTATION
Caltrans

CONSULTANT FUNCTIONAL SUPERVISOR: TIMOTHY J. LEE
CALCULATED-DESIGNED BY: CARLOS RODRIGUEZ, SCOTT DWYER
CHECKED BY: STEVE LOUPE
REVISED BY: SMD
DATE REVISED: 05/03/18

X:\237_101_Mathilda\000_CAD\Sheets\IA-Drainage\IA-Plans\0413000204ia006.dgn

LAST REVISION 01-15-18
DATE PLOTTED => 6/20/2018
TIME PLOTTED => 11:09:12 AM

Dist	COUNTY	ROUTE	POST MILES TOTAL PROJECT	SHEET No.	TOTAL SHEETS
04	SCL	101,237	45.2/45.8, 2.7/3.3	107	736

REGISTERED CIVIL ENGINEER — 6-13-18 DATE

6-20-18
PLANS APPROVAL DATE

STEVE LOUPE No. 63575 Exp. 9/30/18 CIVIL — REGISTERED PROFESSIONAL ENGINEER — STATE OF CALIFORNIA

THE STATE OF CALIFORNIA OR ITS OFFICERS OR AGENTS SHALL NOT BE RESPONSIBLE FOR THE ACCURACY OR COMPLETENESS OF SCANNED COPIES OF THIS PLAN SHEET.

WMH CORPORATION
50 W San Fernando St
Suite 950
San Jose, CA 95113

VTA
3331 N First St
Building B
San Jose, Ca 95134

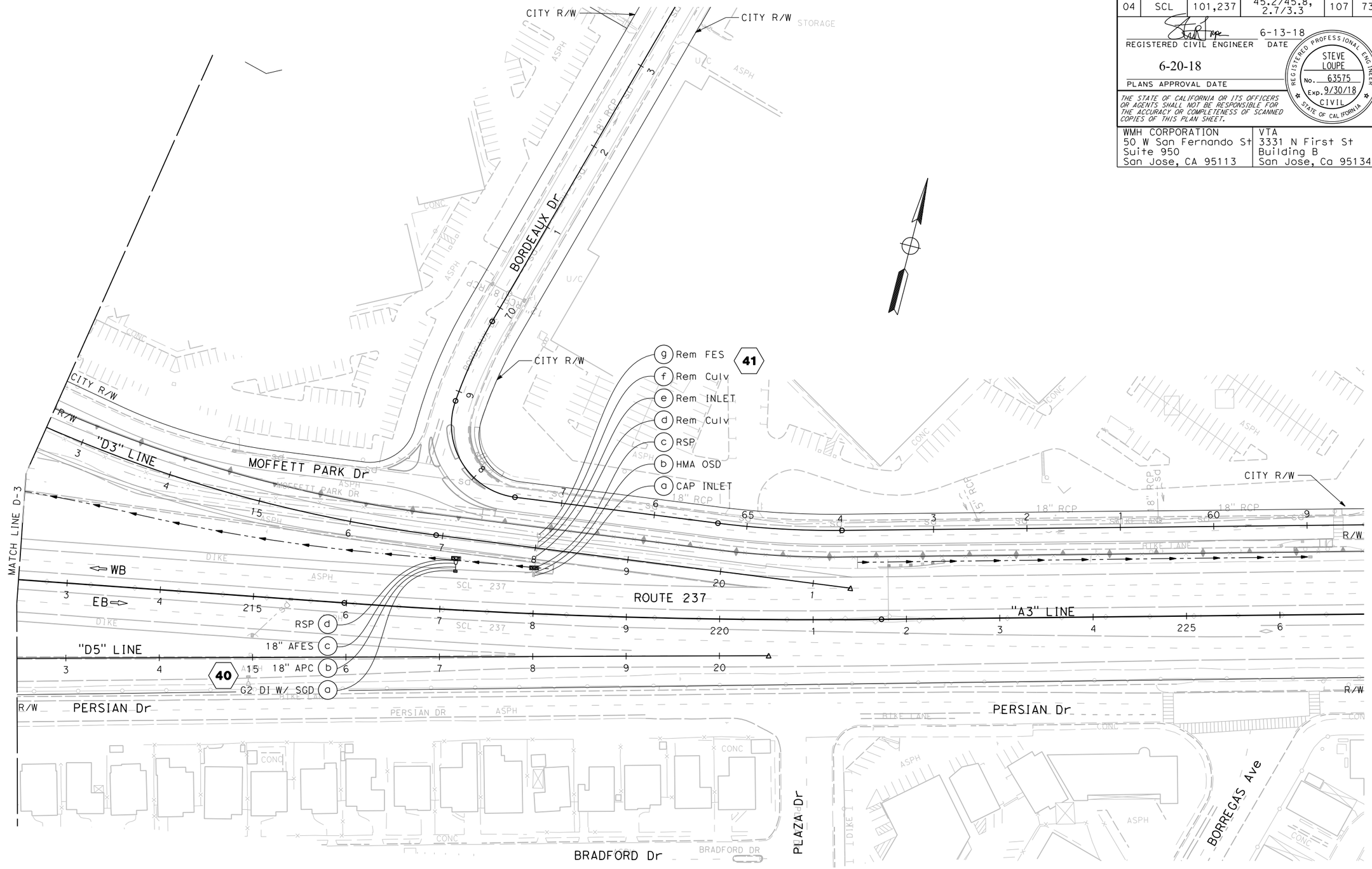

FOR NOTES AND LEGEND, SEE SHEET D-1

APPROVED FOR DRAINAGE WORK ONLY

DRAINAGE PLAN

SCALE: 1" = 50'

D-7

CALCULATED-DESIGNED BY	CARLOS RODRIGUEZ SCOTT DWYER	REVISED BY	SMD
CHECKED BY	STEVE LOUPE	DATE REVISED	05/03/18

CONSULTANT FUNCTIONAL SUPERVISOR: TIMOTHY J. LEE

STATE OF CALIFORNIA - DEPARTMENT OF TRANSPORTATION

Caltrans

X:\237_101_Mathilda\000_CAD\Sheets\1A-Drainage\1A-Plans\0413000204ia007.dgn

LAST REVISION 01-15-18
DATE PLOTTED => 6/20/2018
TIME PLOTTED => 11:09:14 AM

BORDER LAST REVISED 7/2/2010 | USERNAME => Eilif | DGN FILE => 0413000204ia007.dgn | RELATIVE BORDER SCALE IS IN INCHES 0 1 2 3 | UNIT 0000 | PROJECT NUMBER & PHASE 0413000204

Dist	COUNTY	ROUTE	POST MILES TOTAL PROJECT	SHEET No.	TOTAL SHEETS
04	SCL	101,237	45.2/45.8, 2.7/3.3	108	736

REGISTERED CIVIL ENGINEER — 6-13-18 DATE

PLANS APPROVAL DATE — 6-20-18

REGISTERED PROFESSIONAL ENGINEER — STEVE LOUPE — No. 63575 — Exp. 9/30/18 — CIVIL — STATE OF CALIFORNIA

THE STATE OF CALIFORNIA OR ITS OFFICERS OR AGENTS SHALL NOT BE RESPONSIBLE FOR THE ACCURACY OR COMPLETENESS OF SCANNED COPIES OF THIS PLAN SHEET.

WMH CORPORATION
50 W San Fernando St
Suite 950
San Jose, CA 95113

VTA
3331 N First St
Building B
San Jose, Ca 95134

REVISED BY	DATE REVISED
RS	5/3/18

CALCULATED-DESIGNED BY: RICHARD SAGASTUME, SCOTT DWYER
CHECKED BY: STEVE LOUPE
SUPERVISOR: TIMOTHY J. LEE
CONSULTANT FUNCTIONAL SUPERVISOR

STATE OF CALIFORNIA - DEPARTMENT OF TRANSPORTATION
Caltrans

X:\237_101_Mathilde\000_CADSheets\1A-Drainage\1B-Profiles\0413000204ib001.dgn

DRAINAGE SYSTEM No. 1

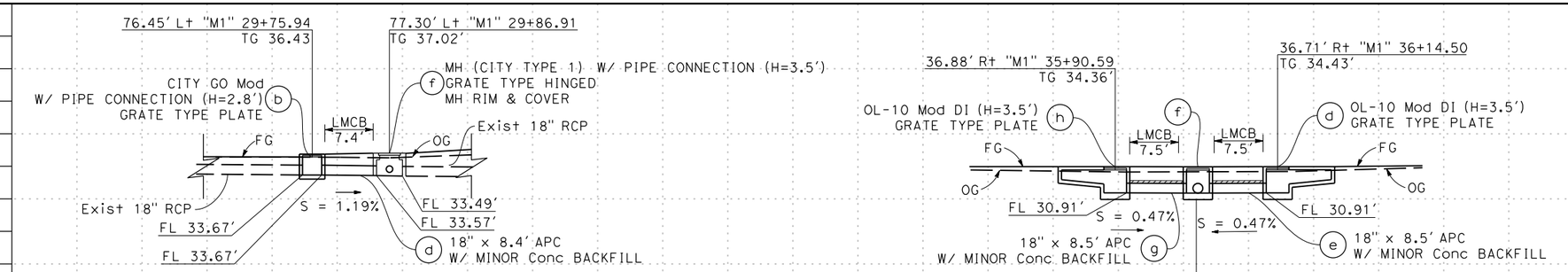

DRAINAGE SYSTEM No. 2

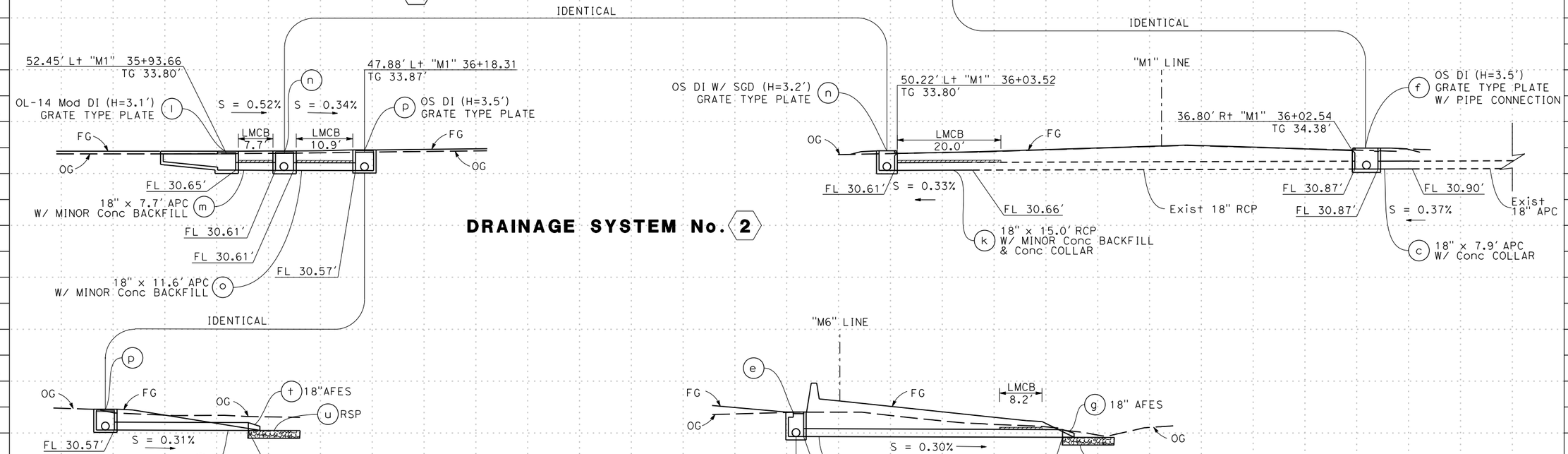

DRAINAGE SYSTEM No. 2

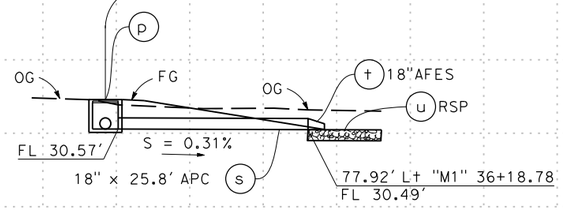

DRAINAGE SYSTEM No. 5

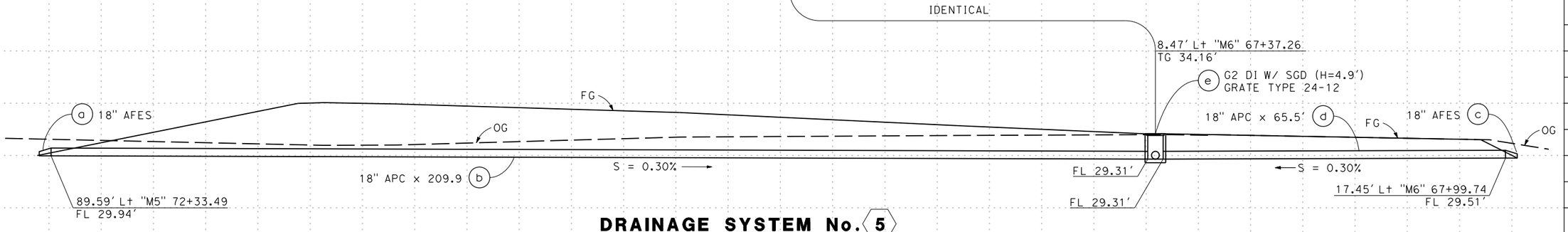

DRAINAGE PROFILES

SCALE: Horiz 1" = 10'
Vert 1" = 10'

DP-1

LAST REVISION: DATE PLOTTED => 6/20/2018 TIME PLOTTED => 11:09:09 AM
01-15-18

BORDER LAST REVISED 7/2/2010 | USERNAME => Eilif | DGN FILE => 0413000204ib001.dgn | RELATIVE BORDER SCALE IS IN INCHES 0 1 2 3 | UNIT 0000 | PROJECT NUMBER & PHASE 0413000204

Dist	COUNTY	ROUTE	POST MILES TOTAL PROJECT	SHEET No.	TOTAL SHEETS
04	SCL	101,237	45.2/45.8, 2.7/3.3	109	736

REGISTERED CIVIL ENGINEER — 6-13-18 DATE

PLANS APPROVAL DATE — 6-20-18

REGISTERED PROFESSIONAL ENGINEER — STEVE LOUPE — No. 63575 — Exp. 9/30/18 — CIVIL — STATE OF CALIFORNIA

THE STATE OF CALIFORNIA OR ITS OFFICERS OR AGENTS SHALL NOT BE RESPONSIBLE FOR THE ACCURACY OR COMPLETENESS OF SCANNED COPIES OF THIS PLAN SHEET.

WMH CORPORATION
50 W San Fernando St
Suite 950
San Jose, CA 95113

VTA
3331 N First St
Building B
San Jose, Ca 95134

DRAINAGE SYSTEM No. 6

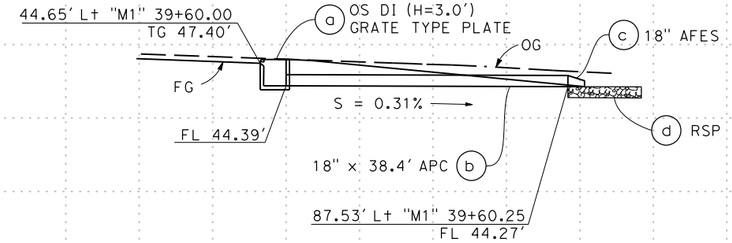

DRAINAGE SYSTEM No. 13

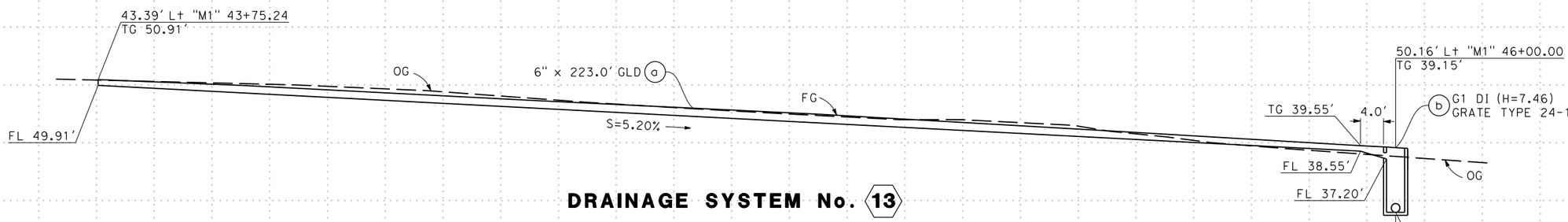

DRAINAGE SYSTEM No. 14

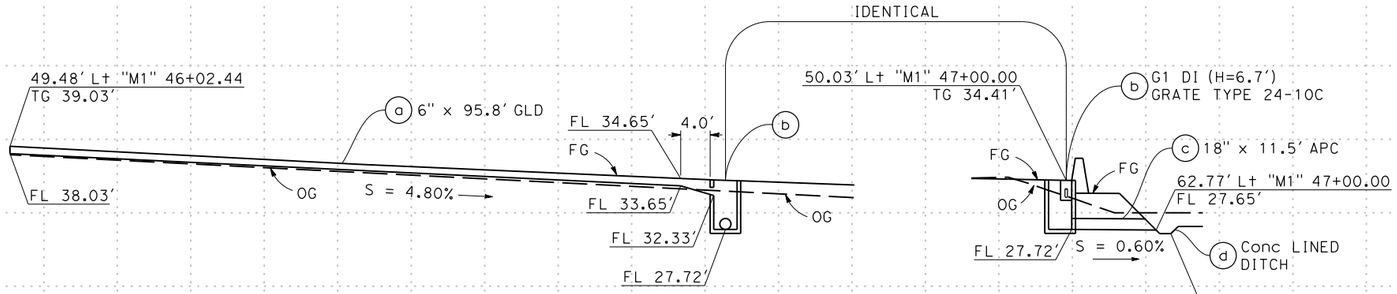

DRAINAGE SYSTEM No. 13

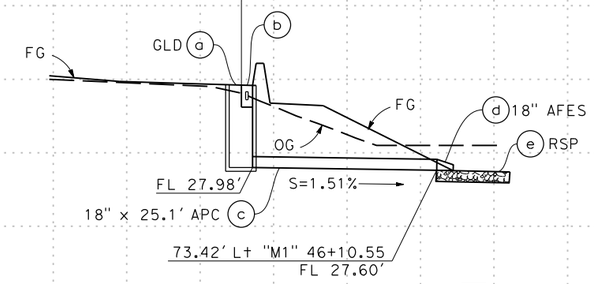

DRAINAGE SYSTEM No. 12

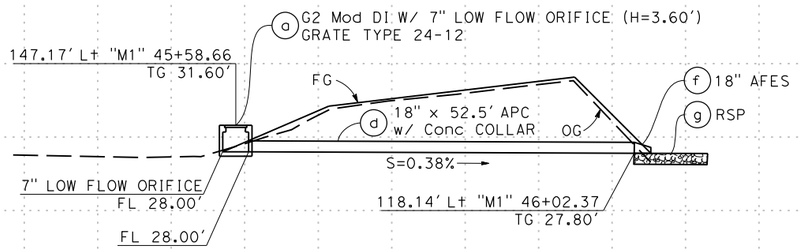

DRAINAGE SYSTEM No. 16

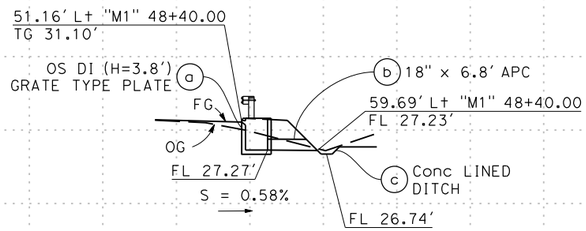

DRAINAGE PROFILES

SCALE: Horiz 1" = 10'
Vert 1" = 10'

DP-2

REVISED BY	RS	5/3/18
DATE REVISED		
CALCULATED-DESIGNED BY	RICHARD SAGASTUME SCOTT DWYER	
CHECKED BY	STEVE LOUPE	
CONSULTANT FUNCTIONAL SUPERVISOR	TIMOTHY J. LEE	

STATE OF CALIFORNIA - DEPARTMENT OF TRANSPORTATION

Caltrans

X:\237_101_Mathilda\000_CAD\Sheets\VIA-Drainage\VB-Profiles\0413000204ib002.dgn

LAST REVISION — DATE PLOTTED => 6/20/2018
01-15-18 — TIME PLOTTED => 11:09:13 AM

BORDER LAST REVISED 7/2/2010 | USERNAME => Eilif | DGN FILE => 0413000204ib002.dgn | RELATIVE BORDER SCALE IS IN INCHES 0 1 2 3 | UNIT 0000 | PROJECT NUMBER & PHASE 0413000204

Dist	COUNTY	ROUTE	POST MILES TOTAL PROJECT	SHEET No.	TOTAL SHEETS
04	SCL	101,237	45.2/45.8, 2.7/3.3	110	736

REGISTERED CIVIL ENGINEER 6-13-18 DATE

6-20-18
PLANS APPROVAL DATE

REGISTERED PROFESSIONAL ENGINEER STEVE LOUPE No. 63575 Exp. 9/30/18 CIVIL STATE OF CALIFORNIA

THE STATE OF CALIFORNIA OR ITS OFFICERS OR AGENTS SHALL NOT BE RESPONSIBLE FOR THE ACCURACY OR COMPLETENESS OF SCANNED COPIES OF THIS PLAN SHEET.

WMH CORPORATION
50 W San Fernando St
Suite 950
San Jose, CA 95113

VTA
3331 N First St
Building B
San Jose, Ca 95134

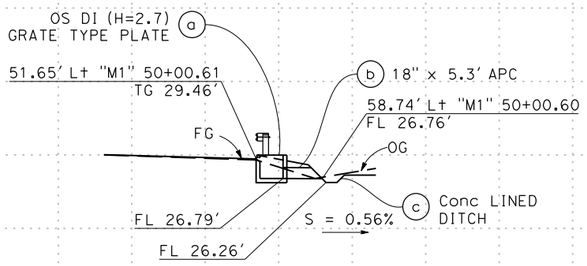

DRAINAGE SYSTEM No. 17

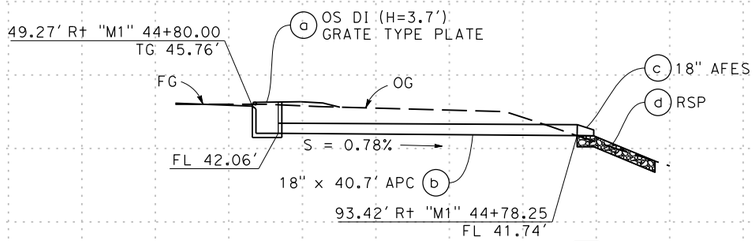

DRAINAGE SYSTEM No. 18

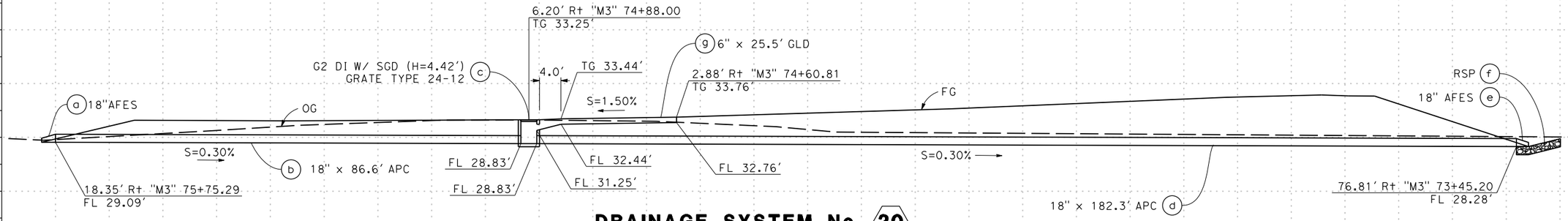

DRAINAGE SYSTEM No. 20

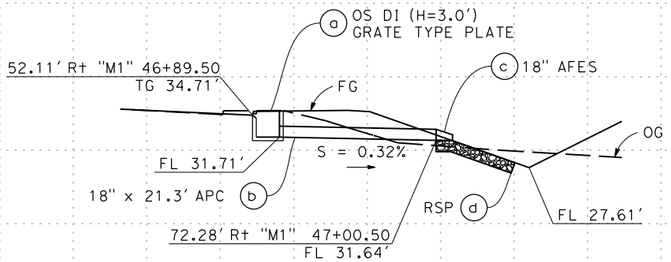

DRAINAGE SYSTEM No. 22

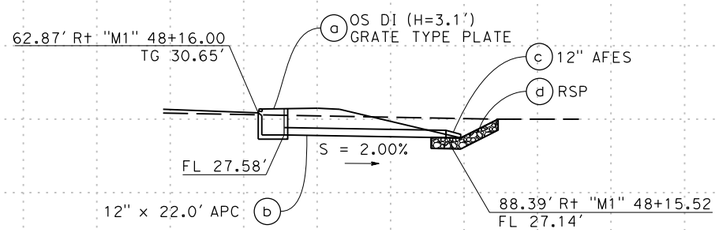

DRAINAGE SYSTEM No. 24

DRAINAGE PROFILES

SCALE: Horiz 1" = 10'
Vert 1" = 10'

DP-3

STATE OF CALIFORNIA - DEPARTMENT OF TRANSPORTATION
Caltrans

CONSULTANT FUNCTIONAL SUPERVISOR: TIMOTHY J. LEE
CALCULATED-DESIGNED BY: RICHARD SAGASTUME, SCOTT DWYER
CHECKED BY: STEVE LOUPE
REVISED BY: RS
DATE REVISED: 5/3/18

X:\237_101_Mathilda\000_CAD\Sheets\IA-Drainage\IB-Profiles\0413000204ib003.dgn

LAST REVISION 01-15-18
DATE PLOTTED => 6/20/2018
TIME PLOTTED => 11:09:15 AM

Dist	COUNTY	ROUTE	POST MILES TOTAL PROJECT	SHEET No.	TOTAL SHEETS
04	SCL	101,237	45.2/45.8, 2.7/3.3	111	736

REGISTERED CIVIL ENGINEER — 6-13-18 DATE

6-20-18
PLANS APPROVAL DATE

STEVE LOUPE No. 63575 Exp. 9/30/18 CIVIL — REGISTERED PROFESSIONAL ENGINEER — STATE OF CALIFORNIA

THE STATE OF CALIFORNIA OR ITS OFFICERS OR AGENTS SHALL NOT BE RESPONSIBLE FOR THE ACCURACY OR COMPLETENESS OF SCANNED COPIES OF THIS PLAN SHEET.

WMH CORPORATION
50 W San Fernando St
Suite 950
San Jose, CA 95113

VTA
3331 N First St
Building B
San Jose, Ca 95134

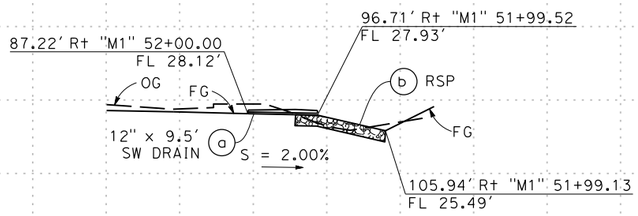

DRAINAGE SYSTEM No. 26

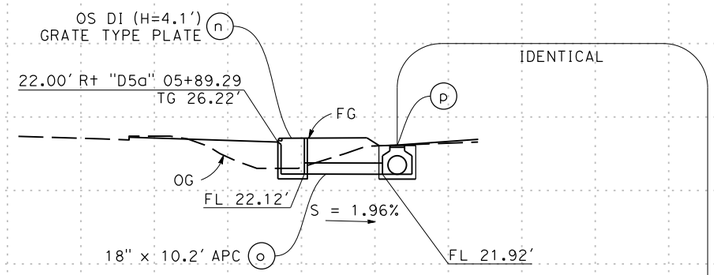

DRAINAGE SYSTEM No. 27

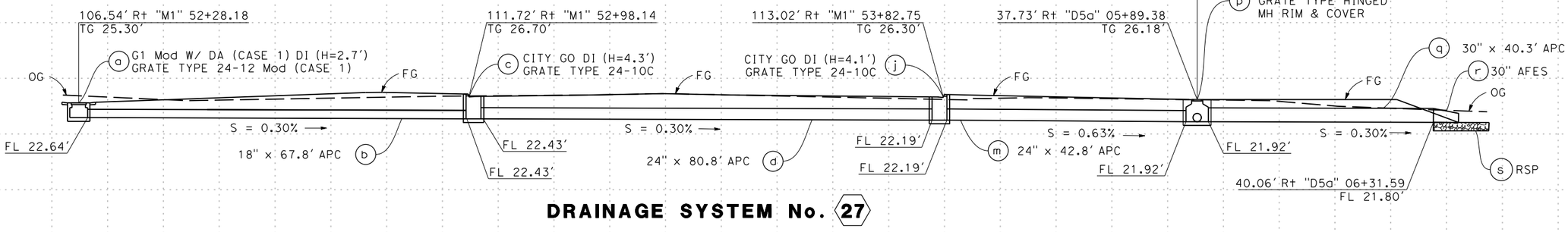

DRAINAGE SYSTEM No. 27

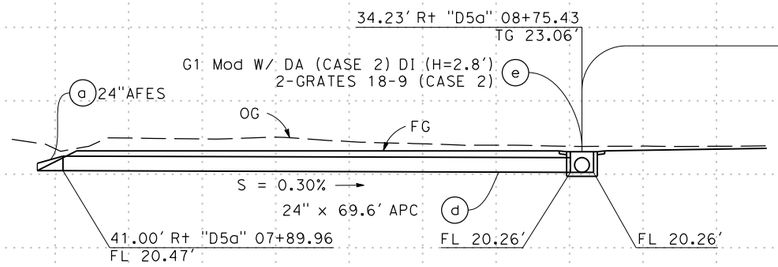

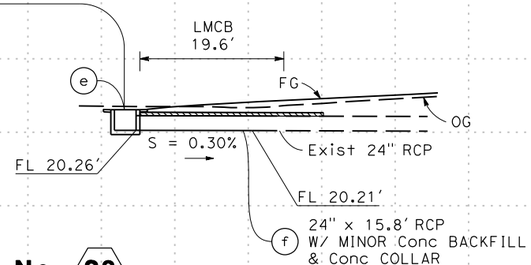

DRAINAGE SYSTEM No. 28

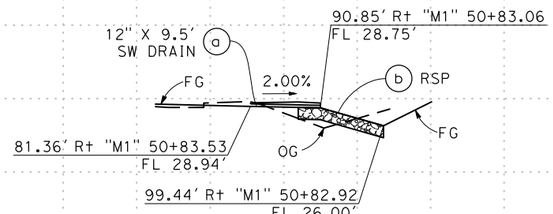

DRAINAGE SYSTEM No. 25

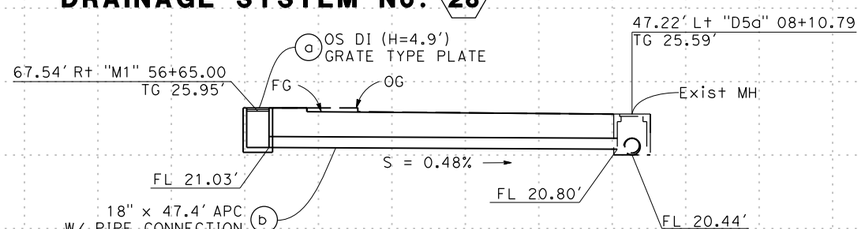

DRAINAGE SYSTEM No. 29

DRAINAGE PROFILES

SCALE: Horiz 1" = 10'
Vert 1" = 10'

DP-4

REVISED BY	RS		
DATE REVISED	5/3/18		
CALCULATED-DESIGNED BY	RICHARD SAGASTUME SCOTT DWYER		
CHECKED BY	STEVE LOUPE		
CONSULTANT FUNCTIONAL SUPERVISOR	TIMOTHY J. LEE		
STATE OF CALIFORNIA - DEPARTMENT OF TRANSPORTATION	Caltrans		

LAST REVISION 01-15-18 | DATE PLOTTED => 6/20/2018 | TIME PLOTTED => 11:09:18 AM

X:\237_101_Mathilda\000_CAD\Sheets\1A-Drainage\1B-Profiles\04130002041b004.dgn

BORDER LAST REVISED 7/2/2010 | USERNAME => Eilif | DGN FILE => 0413000204ib004.dgn | RELATIVE BORDER SCALE IS IN INCHES 0 1 2 3 | UNIT 0000 | PROJECT NUMBER & PHASE 0413000204

Dist	COUNTY	ROUTE	POST MILES TOTAL PROJECT	SHEET No.	TOTAL SHEETS
04	SCL	101,237	45.2/45.8, 2.7/3.3	112	736

REGISTERED CIVIL ENGINEER — 6-13-18 DATE

6-20-18
PLANS APPROVAL DATE

REGISTERED PROFESSIONAL ENGINEER — STEVE LOUPE — No. 63575 — Exp. 9/30/18 — CIVIL — STATE OF CALIFORNIA

THE STATE OF CALIFORNIA OR ITS OFFICERS OR AGENTS SHALL NOT BE RESPONSIBLE FOR THE ACCURACY OR COMPLETENESS OF SCANNED COPIES OF THIS PLAN SHEET.

WMH CORPORATION
50 W San Fernando St
Suite 950
San Jose, CA 95113

VTA
3331 N First St
Building B
San Jose, Ca 95134

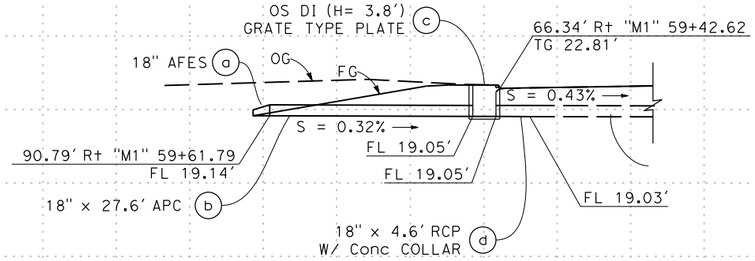

DRAINAGE SYSTEM No. 30

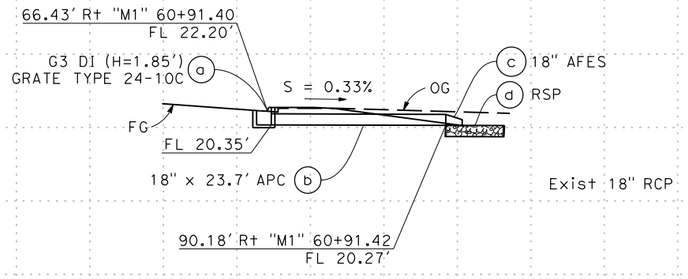

DRAINAGE SYSTEM No. 32

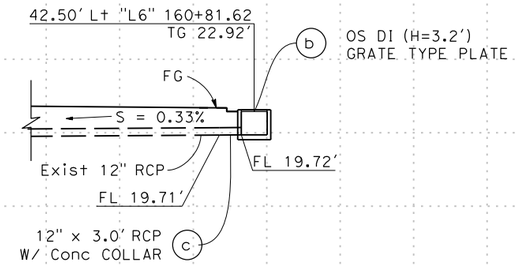

DRAINAGE SYSTEM No. 33

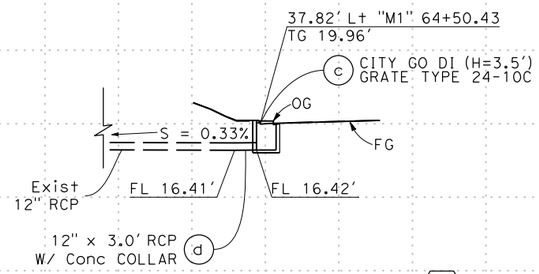

DRAINAGE SYSTEM No. 34

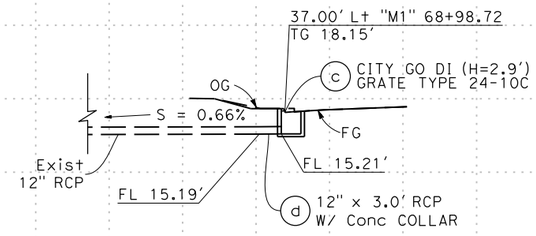

DRAINAGE SYSTEM No. 35

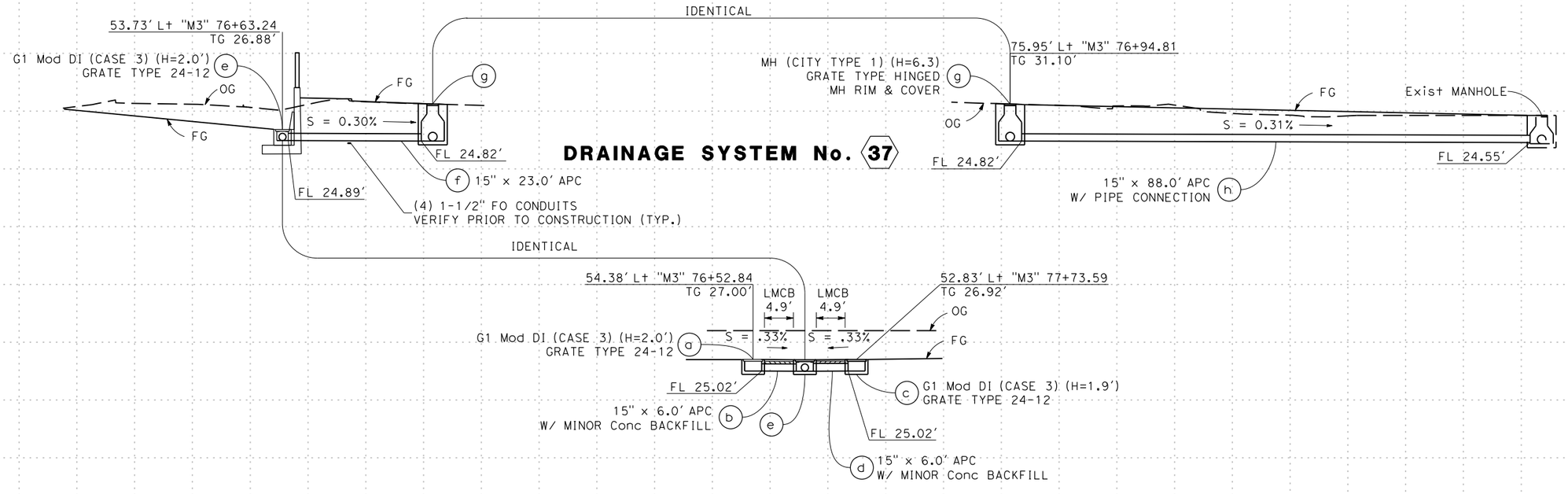

DRAINAGE SYSTEM No. 37

DRAINAGE SYSTEM No. 37

DRAINAGE PROFILES

SCALE: Horiz 1" = 10'
Vert 1" = 10'

DP-5

RICHARD SAGASTUME SCOTT DWYER	RS	5/3/18
STEVE LOUPE	REVISED BY	DATE REVISED
CALCULATED-DESIGNED BY		
CHECKED BY		
TIMOTHY J. LEE	CONSULTANT FUNCTIONAL SUPERVISOR	

STATE OF CALIFORNIA - DEPARTMENT OF TRANSPORTATION
Caltrans

LAST REVISION 01-15-18
DATE PLOTTED => 9/21/2018
TIME PLOTTED => 12:25:10 PM

X:\237_101_Mathilde\000_CAD\Sheets\1A-Drainage\1B-Profiles\0413000204ib005.dgn

BORDER LAST REVISED 7/2/2010 | USERNAME => rsagastume | DGN FILE => 0413000204ib005.dgn | RELATIVE BORDER SCALE IS IN INCHES 0 1 2 3 | UNIT 0000 | PROJECT NUMBER & PHASE 0413000204

Dist	COUNTY	ROUTE	POST MILES TOTAL PROJECT	SHEET No.	TOTAL SHEETS
04	SCL	101,237	45.2/45.8, 2.7/3.3	113	736

REGISTERED CIVIL ENGINEER — 6-13-18 DATE

PLANS APPROVAL DATE — 6-20-18

REGISTERED PROFESSIONAL ENGINEER — STEVE LOUPE — No. 63575 — Exp. 9/30/18 — CIVIL — STATE OF CALIFORNIA

THE STATE OF CALIFORNIA OR ITS OFFICERS OR AGENTS SHALL NOT BE RESPONSIBLE FOR THE ACCURACY OR COMPLETENESS OF SCANNED COPIES OF THIS PLAN SHEET.

WMH CORPORATION
50 W San Fernando St
Suite 950
San Jose, CA 95113

VTA
3331 N First St
Building B
San Jose, Ca 95134

IDENTICAL

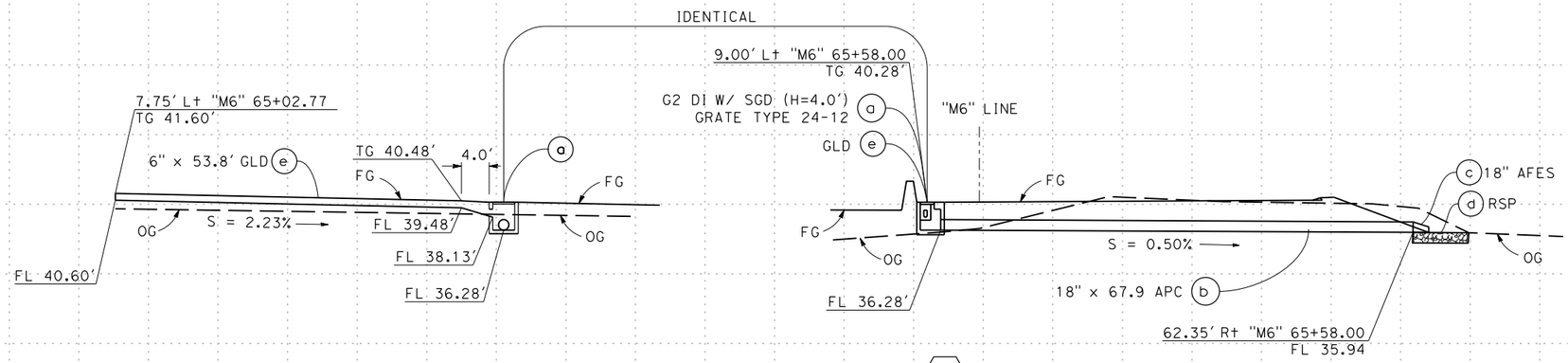

DRAINAGE SYSTEM No. 7

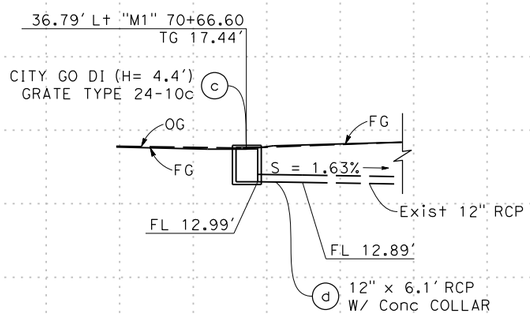

DRAINAGE SYSTEM No. 36

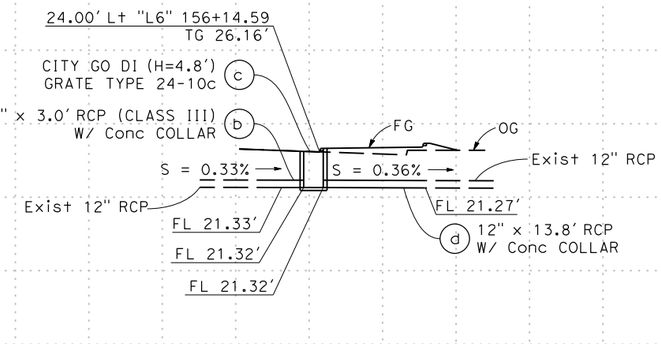

DRAINAGE SYSTEM No. 39

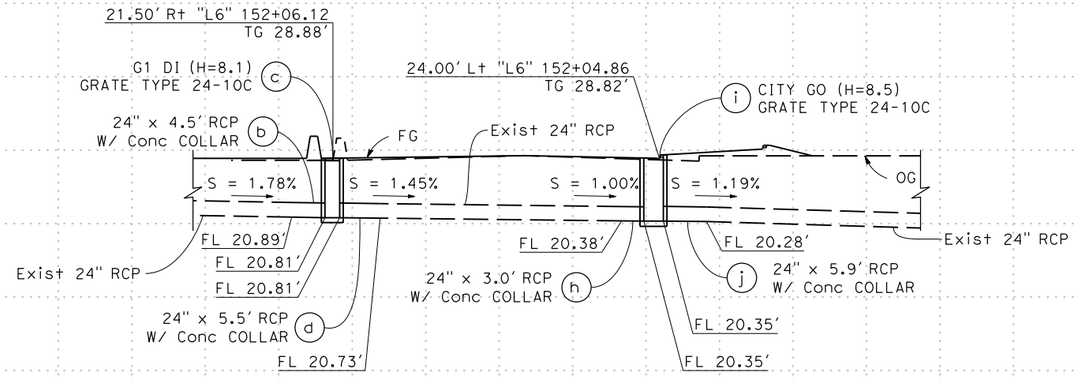

DRAINAGE SYSTEM No. 38

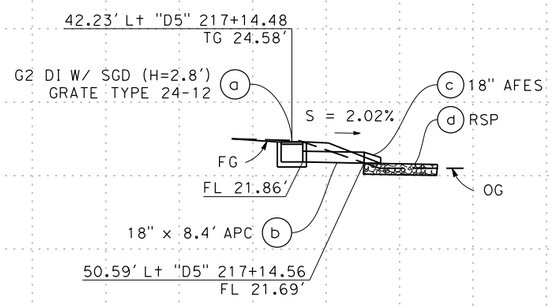

DRAINAGE SYSTEM No. 40

DRAINAGE PROFILES

SCALE: Horiz 1" = 10'
Vert 1" = 10'

DP-6

RICHARD SAGASTUME
SCOTT DWYER
REVISED BY

STEVE LOUPE
CHECKED BY

5/3/18
DATE REVISED

TIMOTHY J. LEE
CONSULTANT FUNCTIONAL SUPERVISOR
CALCULATED-DESIGNED BY

STATE OF CALIFORNIA - DEPARTMENT OF TRANSPORTATION
Caltrans

LAST REVISION
01-15-18 TIME PLOTTED => 12:24:15 PM
DATE PLOTTED => 9/21/2018

X:\237_101_Mothilde\000_CAD\Sheets\1A-Drainage\1B-Profiles\0413000204ib006.dgn

BORDER LAST REVISED 7/2/2010 | USERNAME => rsagastume | DGN FILE => 0413000204ib006.dgn | RELATIVE BORDER SCALE IS IN INCHES 0 1 2 3 | UNIT 0000 | PROJECT NUMBER & PHASE 0413000204

Dist	COUNTY	ROUTE	POST MILES TOTAL PROJECT	SHEET No.	TOTAL SHEETS
04	SCL	101,237	45.2/45.8, 2.7/3.3	114	736

REGISTERED CIVIL ENGINEER 6-13-18 DATE

6-20-18
PLANS APPROVAL DATE

REGISTERED PROFESSIONAL ENGINEER STEVE LOUPE No. 63575 Exp. 9/30/18 CIVIL STATE OF CALIFORNIA

THE STATE OF CALIFORNIA OR ITS OFFICERS OR AGENTS SHALL NOT BE RESPONSIBLE FOR THE ACCURACY OR COMPLETENESS OF SCANNED COPIES OF THIS PLAN SHEET.

WMH CORPORATION
50 W San Fernando St
Suite 950
San Jose, CA 95113

VTA
3331 N First St
Building B
San Jose, Ca 95134

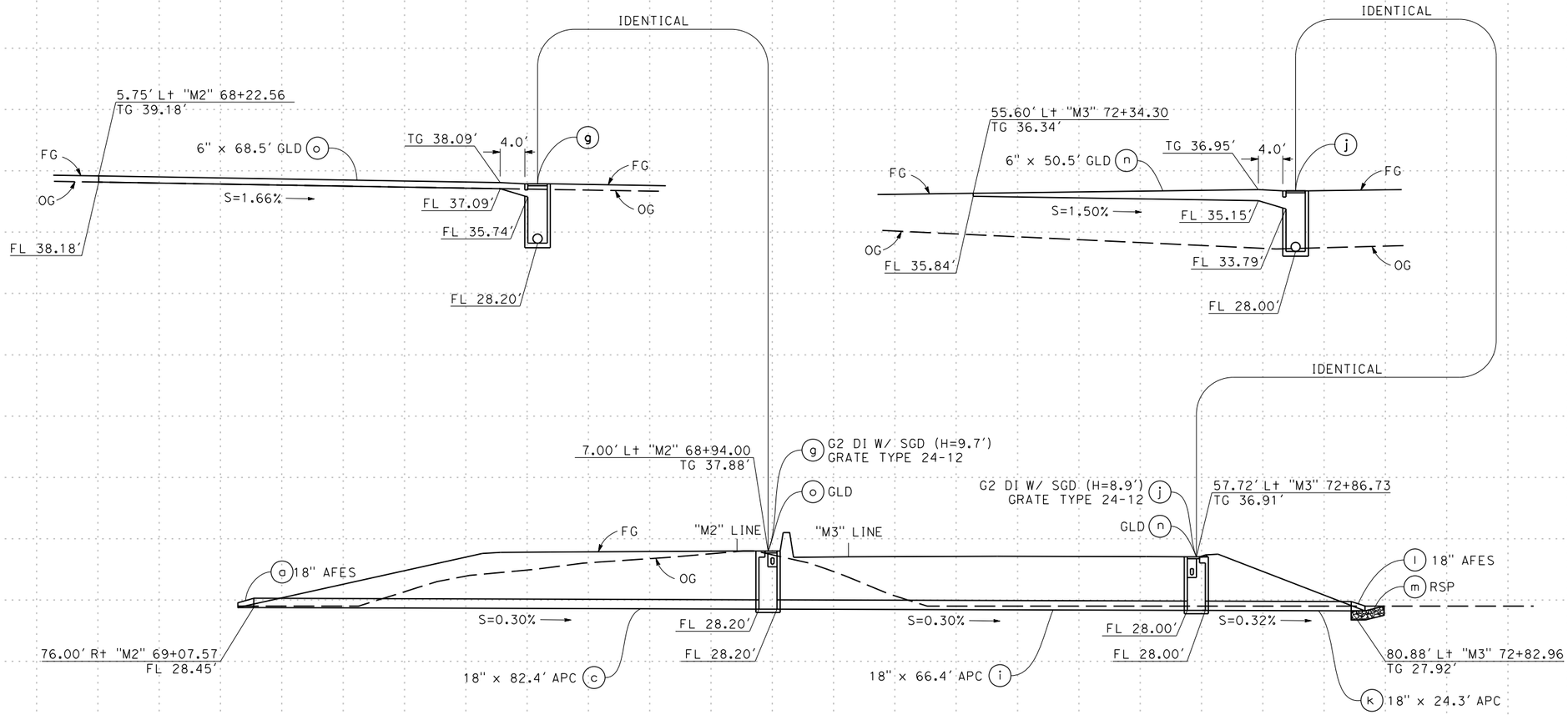

DRAINAGE SYSTEM No. 21

DRAINAGE PROFILES

SCALE: Horiz 1" = 10'
Vert 1" = 10'

DP-7

STATE OF CALIFORNIA - DEPARTMENT OF TRANSPORTATION
Caltrans

CONSULTANT FUNCTIONAL SUPERVISOR: TIMOTHY J. LEE
CALCULATED-DESIGNED BY: RICHARD SAGASTUME, SCOTT DWYER
CHECKED BY: STEVE LOUPE
REVISED BY: RS
DATE REVISED: 5/3/18

X:\237_101_Mathilda\000_CAD\Sheets\IA-Drainage\IB-Profiles\0413000204ib007.dgn

LAST REVISION 01-15-18
DATE PLOTTED => 6/20/2018
TIME PLOTTED => 11:09:24 AM

Dist	COUNTY	ROUTE	POST MILES TOTAL PROJECT	SHEET No.	TOTAL SHEETS
04	SCL	101,237	45.2/45.8, 2.7/3.3	115	736

REGISTERED CIVIL ENGINEER — DATE: 6-13-18

PLANS APPROVAL DATE: 6-20-18

REGISTERED PROFESSIONAL ENGINEER — STEVE LOUPE — No. 63575 — Exp. 9/30/18 — CIVIL — STATE OF CALIFORNIA

THE STATE OF CALIFORNIA OR ITS OFFICERS OR AGENTS SHALL NOT BE RESPONSIBLE FOR THE ACCURACY OR COMPLETENESS OF SCANNED COPIES OF THIS PLAN SHEET.

WMH CORPORATION
50 W San Fernando St
Suite 950
San Jose, CA 95113

VTA
3331 N First St
Building B
San Jose, Ca 95134

FLOW FACE

OFFSET TO STATION LINE

CONCRETE BARRIER AT MEDIAN

TG

ELEVATION

FLOW FACE

OFFSET TO STATION LINE

AC DIKE

TG

ELEVATION

STATION PER DRAINAGE PROFILE

PLAN

CITY MH

FLOW FACE

OFFSET TO STATION LINE

CONCRETE BARRIER AT OUTSIDE SHOULDER

TG

FG

ELEVATION

PLAN

INLET ADJACENT TO CONCRETE BARRIER

FLOW FACE

OFFSET TO STATION LINE

AC DIKE

TG

FG

ELEVATION

PLAN

INLET ADJACENT TO AC DIKE

FLOW FACE

OFFSET TO STATION LINE

TG

FG

ELEVATION

PLAN

INLET ADJACENT TO CURB OR BARRIER

FLOW FACE

OFFSET TO STATION LINE

TG

FG

ELEVATION

PLAN

INLET ADJACENT TO RETAINING WALL

FLOW FACE

OFFSET TO STATION LINE

TG

FG

ELEVATION

PLAN

INLET ADJACENT TO RETAINING WALL OR SOUNDWALL

℄ BOX

OFFSET TO STATION LINE

TG

FG

ELEVATION

PLAN

FIELD INLET

DRAINAGE DETAILS

NO SCALE

DD-1

REVISED BY	RS		
DATE REVISED	5/3/18		
CALCULATED-DESIGNED BY	RICHARD SAGASTUME SCOTT DWYER		
CHECKED BY	STEVE LOUPE		
CONSULTANT FUNCTIONAL SUPERVISOR	TIMOTHY J. LEE		
STATE OF CALIFORNIA - DEPARTMENT OF TRANSPORTATION	Caltrans		

LAST REVISION 01-15-18 — DATE PLOTTED => 6/20/2018 — TIME PLOTTED => 11:09:37 AM

X:\237_101_Mathilda\000_CAD\Sheets\1A-Drainage\IC-Details\0413000204ic001.dgn

BORDER LAST REVISED 7/2/2010 | USERNAME => Eilif | DGN FILE => 0413000204ic001.dgn | RELATIVE BORDER SCALE IS IN INCHES 0 1 2 3 | UNIT 0000 | PROJECT NUMBER & PHASE 0413000204

Dist	COUNTY	ROUTE	POST MILES TOTAL PROJECT	SHEET No.	TOTAL SHEETS
04	SCL	101,237	45.2/45.8, 2.7/3.3	116	736

REGISTERED CIVIL ENGINEER 6-13-18 DATE

6-20-18
PLANS APPROVAL DATE

REGISTERED PROFESSIONAL ENGINEER STEVE LOUPE No. 63575 Exp. 9/30/18 CIVIL STATE OF CALIFORNIA

THE STATE OF CALIFORNIA OR ITS OFFICERS OR AGENTS SHALL NOT BE RESPONSIBLE FOR THE ACCURACY OR COMPLETENESS OF SCANNED COPIES OF THIS PLAN SHEET.

WMH CORPORATION
50 W San Fernando St
Suite 950
San Jose, CA 95113

VTA
3331 N First St
Building B
San Jose, Ca 95134

NOTES:

1. FOR DETAILS NOT SHOWN, SEE RSP D72B & RSP D72C.
2. FOR TABLES NOT SHOWN, SEE TABLES ON RSP D72C & RSP D72G.

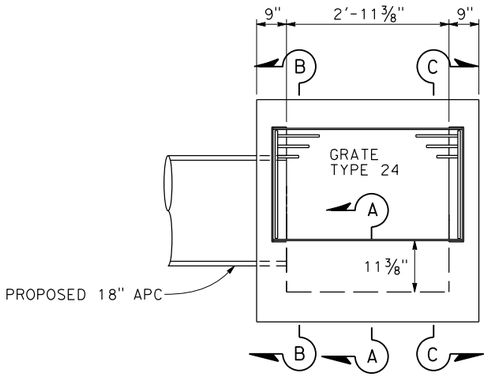

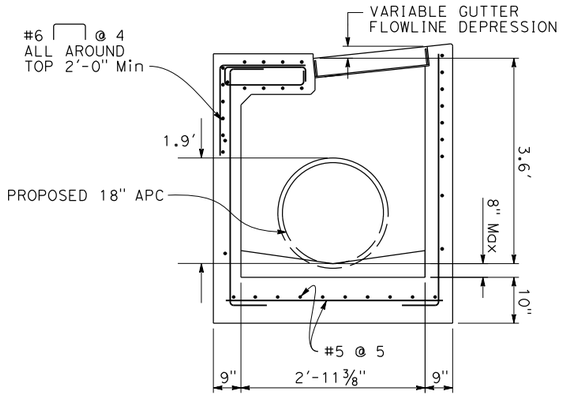

SECTION B-B

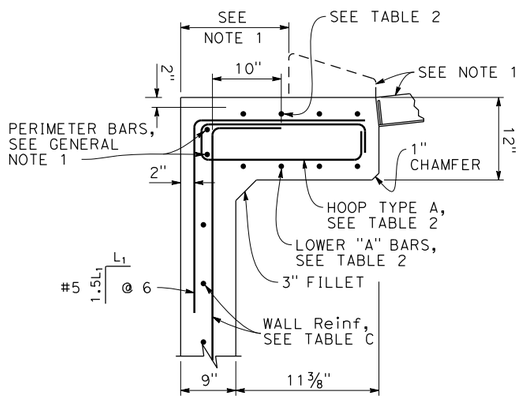

SECTION A-A

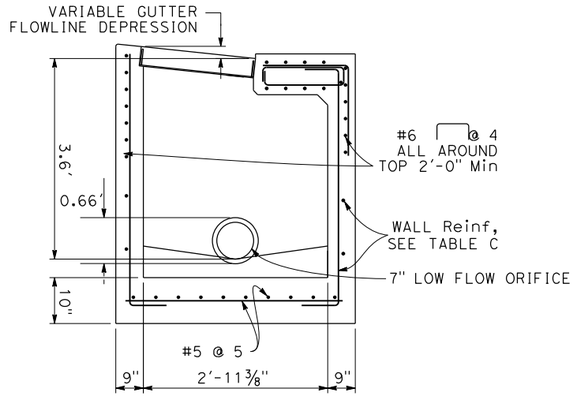

SECTION C-C

DRAINAGE SYSTEM NO. 12
G2 MOD DI

DRAINAGE DETAILS

NO SCALE

DD-2

STATE OF CALIFORNIA - DEPARTMENT OF TRANSPORTATION
Caltrans

CONSULTANT FUNCTIONAL SUPERVISOR: TIMOTHY J. LEE
CALCULATED-DESIGNED BY: RICHARD SAGASTUME, SCOTT DWYER
CHECKED BY: STEVE LOUPE
REVISED BY: RS
DATE REVISED: 5/3/18

X:\237_101_Mathilda\000_CAD\Sheets\1A-Drainage\1C-Details\0413000204ic002.dgn

LAST REVISION 01-15-18
DATE PLOTTED => 6/20/2018
TIME PLOTTED => 11:09:40 AM

NOTES:

SEE CSV STD DETAILS 13A
FOR DETAILS NOT SHOWN

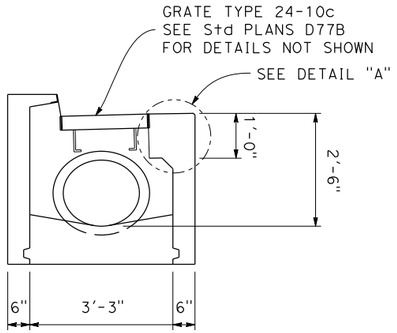

SECTION A-A

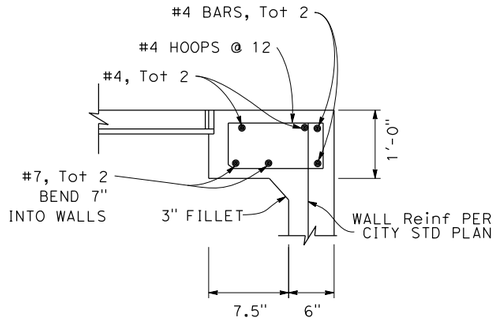

DETAIL "A"

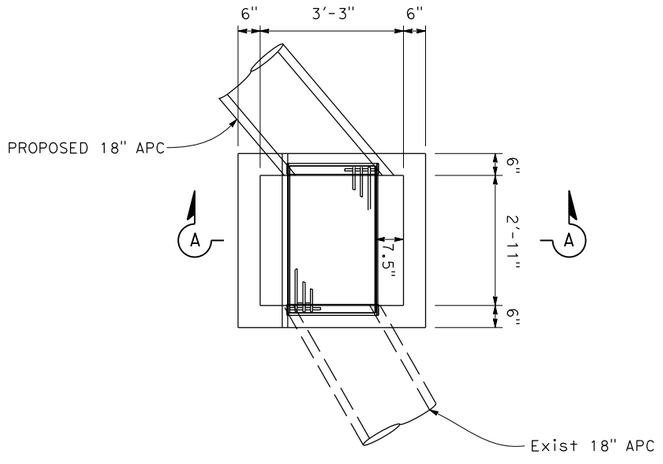

PLAN

CITY GO Mod

DRAINAGE SYSTEM NO. 1 (b)

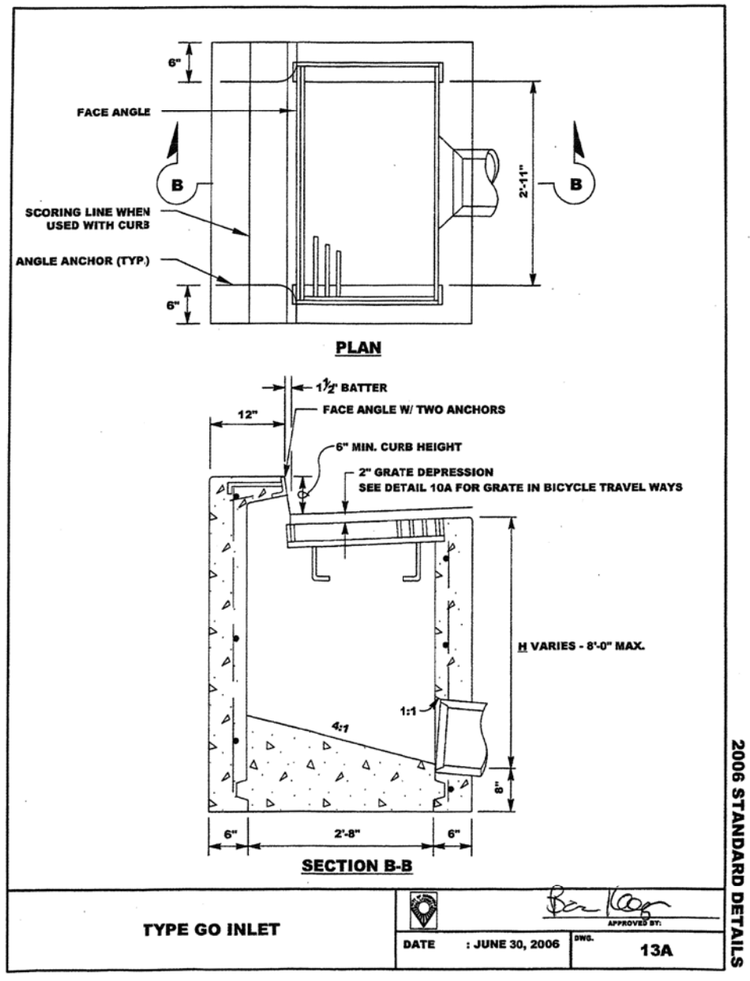

DETAIL 10A

DRAINAGE DETAILS

NO SCALE

DD-3

Dist	COUNTY	ROUTE	POST MILES TOTAL PROJECT	SHEET No.	TOTAL SHEETS
04	SCL	101,237	45.2/45.8, 2.7/3.3	117	736

REGISTERED CIVIL ENGINEER — 6-13-18 DATE

6-20-18
PLANS APPROVAL DATE

STEVE LOUPE No. 63575 Exp. 9/30/18 CIVIL — REGISTERED PROFESSIONAL ENGINEER — STATE OF CALIFORNIA

THE STATE OF CALIFORNIA OR ITS OFFICERS OR AGENTS SHALL NOT BE RESPONSIBLE FOR THE ACCURACY OR COMPLETENESS OF SCANNED COPIES OF THIS PLAN SHEET.

WMH CORPORATION 50 W San Fernando St Suite 950 San Jose, CA 95113	VTA 3331 N First St Building B San Jose, Ca 95134

CALCULATED-DESIGNED BY	RICHARD SAGASTUME SCOTT DWYER	REVISED BY	RS
CHECKED BY	STEVE LOUPE	DATE REVISED	5/3/18
CONSULTANT FUNCTIONAL SUPERVISOR	TIMOTHY J. LEE		

STATE OF CALIFORNIA - DEPARTMENT OF TRANSPORTATION

Caltrans

X:\237_101_Mathilda\000_CAD\Sheets\1A-Drainage\1C-Details\04130002041c003.dgn

LAST REVISION: 01-15-18 | DATE PLOTTED => 6/20/2018 | TIME PLOTTED => 11:09:42 AM

BORDER LAST REVISED 7/2/2010 | USERNAME => Eilif | DGN FILE => 0413000204ic003.dgn | RELATIVE BORDER SCALE IS IN INCHES 0 1 2 3 | UNIT 0000 | PROJECT NUMBER & PHASE 0413000204

NOTES:

1. SEE Std PLANS D72B & D77A FOR DETAILS NOT SHOWN
2. GRATE FRAME FOR DETAILS NOT SHOWN SEE Std PLANS D77A

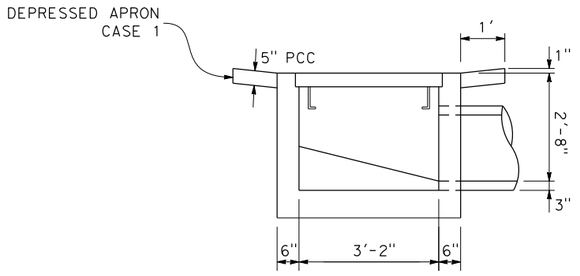

SECTION B-B

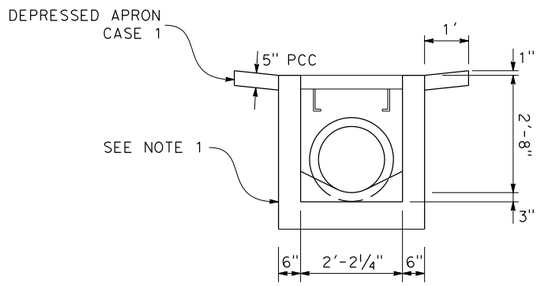

SECTION A-A

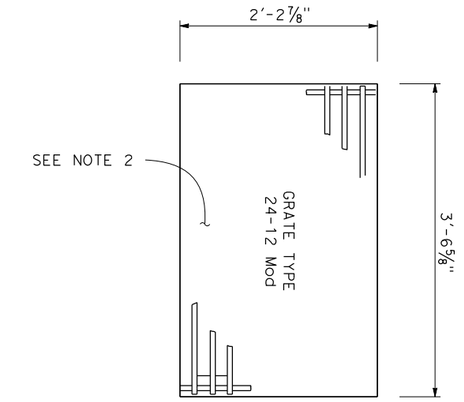

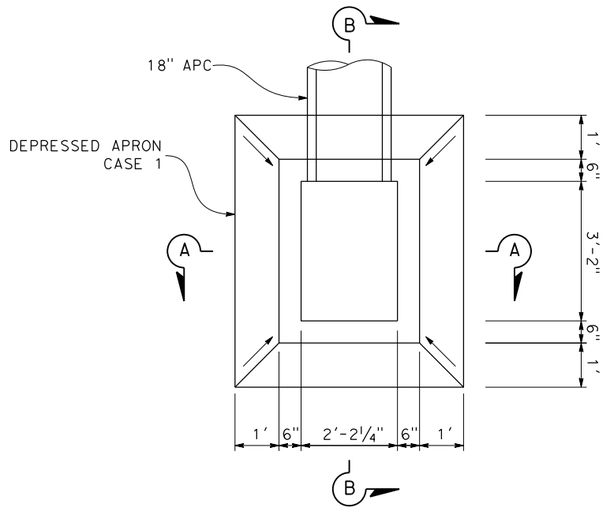

PLAN

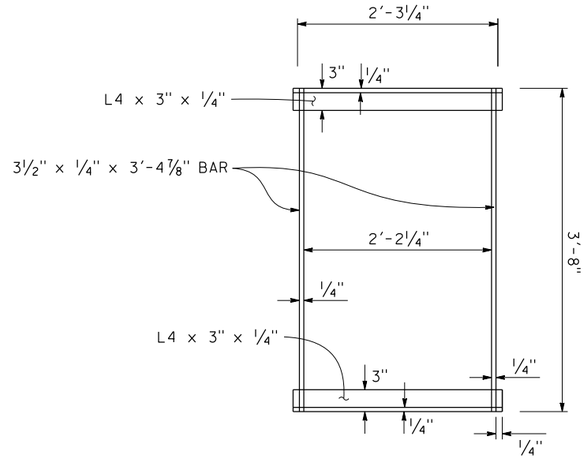

G1 Mod INLET (CASE 1)

DRAINAGE SYSTEM NO. 27 a

DRAINAGE DETAILS

NO SCALE

DD-4

Dist	COUNTY	ROUTE	POST MILES TOTAL PROJECT	SHEET No.	TOTAL SHEETS
04	SCL	101,237	45.2/45.8, 2.7/3.3	118	736

6-13-18
REGISTERED CIVIL ENGINEER — DATE

6-20-18
PLANS APPROVAL DATE

REGISTERED PROFESSIONAL ENGINEER — STEVE LOUPE — No. 63575 — Exp. 9/30/18 — CIVIL — STATE OF CALIFORNIA

THE STATE OF CALIFORNIA OR ITS OFFICERS OR AGENTS SHALL NOT BE RESPONSIBLE FOR THE ACCURACY OR COMPLETENESS OF SCANNED COPIES OF THIS PLAN SHEET.

WMH CORPORATION
50 W San Fernando St
Suite 950
San Jose, CA 95113

VTA
3331 N First St
Building B
San Jose, Ca 95134

REVISED BY	DATE REVISED
RS	5/3/18

CALCULATED-DESIGNED BY: RICHARD SAGASTUME, SCOTT DWYER
CHECKED BY: STEVE LOUPE
CONSULTANT FUNCTIONAL SUPERVISOR: TIMOTHY J. LEE
STATE OF CALIFORNIA - DEPARTMENT OF TRANSPORTATION
Caltrans

X:\237_101_Mathilda\000_CAD\Sheets\1A-Drainage\IC-Details\0413000204ic004.dgn

LAST REVISION 01-15-18
DATE PLOTTED => 6/20/2018
TIME PLOTTED => 11:09:56 AM

BORDER LAST REVISED 7/2/2010 | USERNAME => Eilif | DGN FILE => 0413000204ic004.dgn | RELATIVE BORDER SCALE IS IN INCHES 0 1 2 3 | UNIT 0000 | PROJECT NUMBER & PHASE 0413000204

NOTES:

1. SEE Std PLANS D72B FOR DETAILS NOT SHOWN
2. SEE Std PLANS D72B D77A FOR DETAILS NOT SHOWN

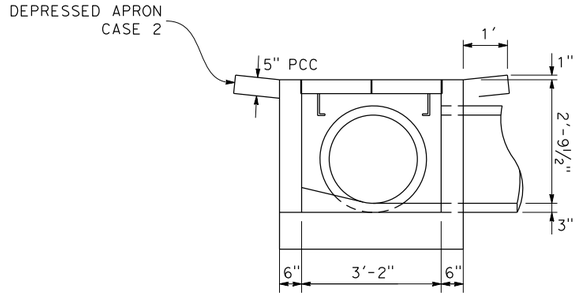

SECTION B-B

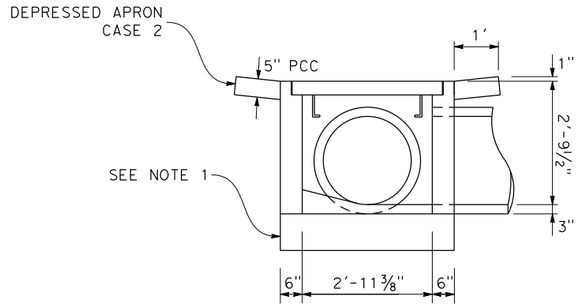

SECTION A-A

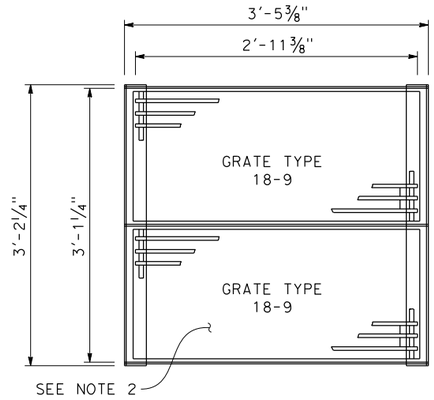

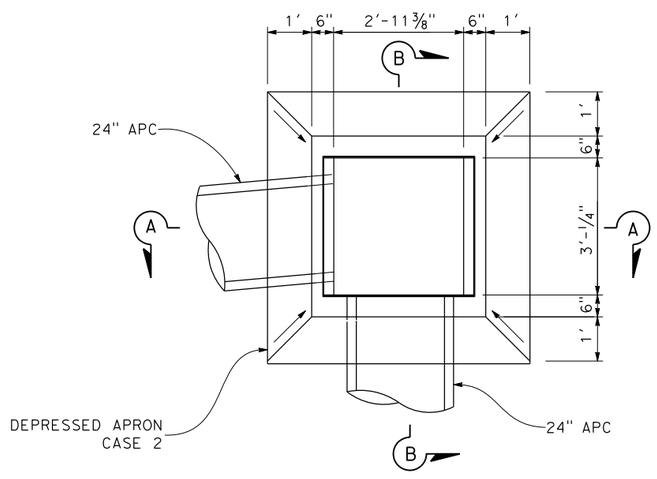

PLAN

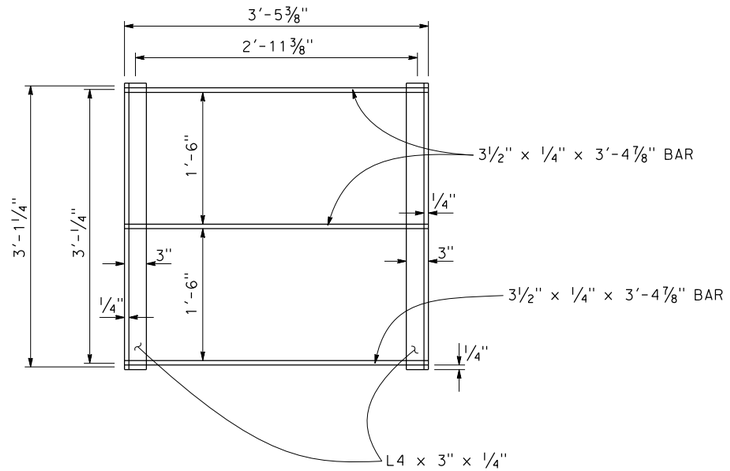

MODIFIED FRAME
PLAN VIEW

G1 Mod INLET (CASE 2)

DRAINAGE SYSTEM NO. 28 (e)

DRAINAGE DETAILS

NO SCALE

DD-5

Dist	COUNTY	ROUTE	POST MILES TOTAL PROJECT	SHEET No.	TOTAL SHEETS
04	SCL	101,237	45.2/45.8, 2.7/3.3	119	736

6-13-18
REGISTERED CIVIL ENGINEER — DATE

6-20-18
PLANS APPROVAL DATE

REGISTERED PROFESSIONAL ENGINEER
STEVE LOUPE
No. 63575
Exp. 9/30/18
CIVIL
STATE OF CALIFORNIA

THE STATE OF CALIFORNIA OR ITS OFFICERS OR AGENTS SHALL NOT BE RESPONSIBLE FOR THE ACCURACY OR COMPLETENESS OF SCANNED COPIES OF THIS PLAN SHEET.

WMH CORPORATION
50 W San Fernando St
Suite 950
San Jose, CA 95113

VTA
3331 N First St
Building B
San Jose, Ca 95134

REVISED BY	DATE REVISED
RS	5/3/18

CALCULATED-DESIGNED BY: RICHARD SAGASTUME, SCOTT DWYER
CHECKED BY: STEVE LOUPE
DESIGN OVERSIGHT: CONSULTANT FUNCTIONAL SUPERVISOR: TIMOTHY J. LEE

STATE OF CALIFORNIA - DEPARTMENT OF TRANSPORTATION
Caltrans

X:\237_101_Mathilda\000_CAD\Sheets\1A-Drainage\1C-Details\0413000204ic005.dgn

LAST REVISION 01-15-18
DATE PLOTTED => 6/20/2018
TIME PLOTTED => 11:09:58 AM

BORDER LAST REVISED 7/2/2010 | USERNAME => Eilif | DGN FILE => 0413000204ic005.dgn | RELATIVE BORDER SCALE IS IN INCHES 0 1 2 3 | UNIT 0000 | PROJECT NUMBER & PHASE 0413000204

NOTES:

FOR DETAILS NOT SHOWN
SEE Std PLANS D72A, D73B, D77A

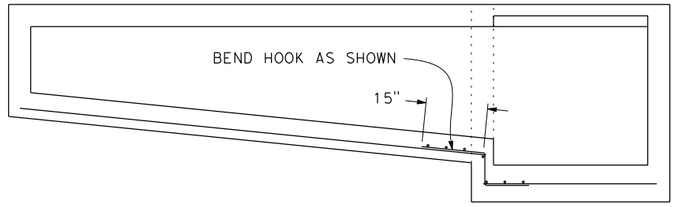

OL-10 & OL-14 Mod INLET

DRAINAGE SYSTEM NO. 2 (d) (h) (l)

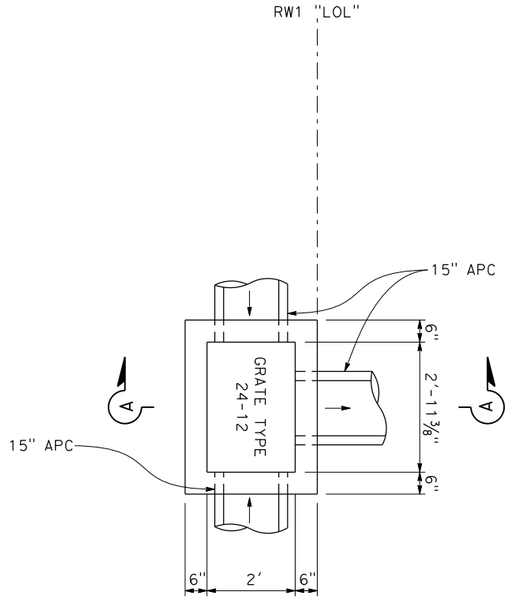

PLAN

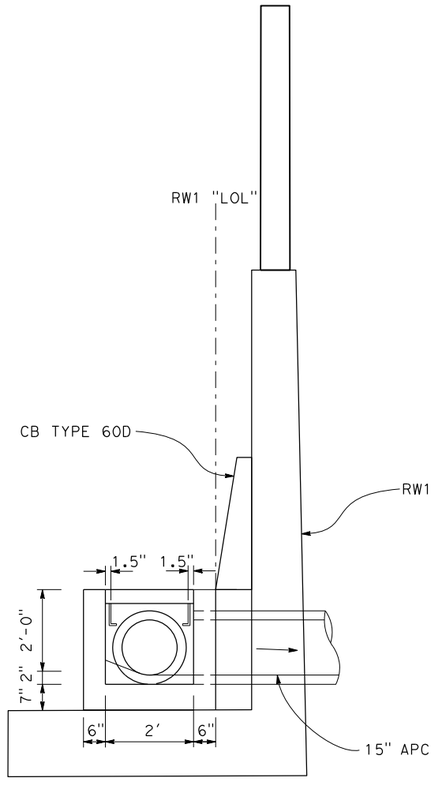

SECTION A-A

G1 Mod INLET (CASE 3)

DRAINAGE SYSTEM NO. 37 (e)

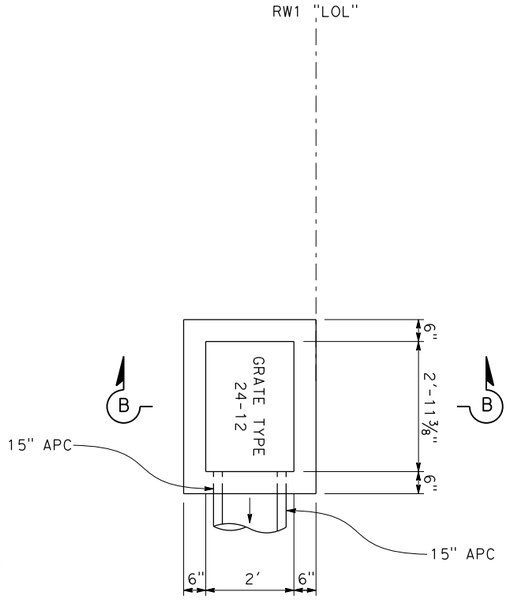

PLAN

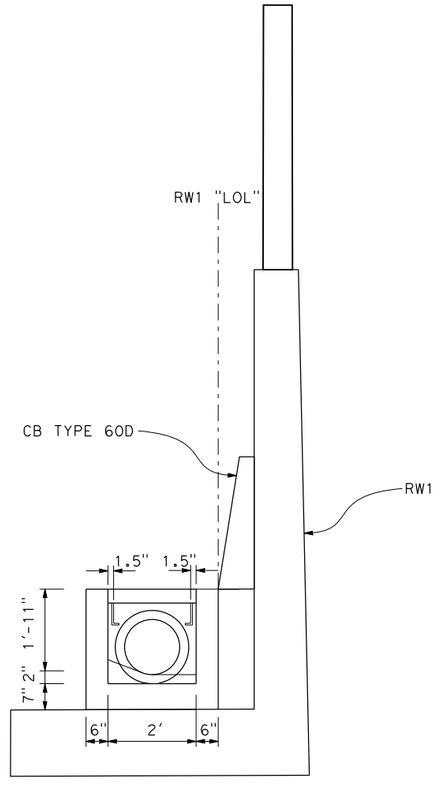

SECTION B-B

G1 Mod INLET (CASE 3)

DRAINAGE SYSTEM NO. 37 (a) (c)

DRAINAGE DETAILS

NO SCALE

DD-6

Dist	COUNTY	ROUTE	POST MILES TOTAL PROJECT	SHEET No.	TOTAL SHEETS
04	SCL	101,237	45.2/45.8, 2.7/3.3	120	736

REGISTERED CIVIL ENGINEER — DATE 6-13-18

6-20-18
PLANS APPROVAL DATE

REGISTERED PROFESSIONAL ENGINEER — STEVE LOUPE — No. 63575 — Exp. 9/30/18 — CIVIL — STATE OF CALIFORNIA

THE STATE OF CALIFORNIA OR ITS OFFICERS OR AGENTS SHALL NOT BE RESPONSIBLE FOR THE ACCURACY OR COMPLETENESS OF SCANNED COPIES OF THIS PLAN SHEET.

WMH CORPORATION
50 W San Fernando St
Suite 950
San Jose, CA 95113

VTA
3331 N First St
Building B
San Jose, Ca 95134

REVISED BY	DATE REVISED
RS	5/3/18

CALCULATED-DESIGNED BY: RICHARD SAGASTUME, SCOTT DWYER
CHECKED BY: STEVE LOUPE
CONSULTANT FUNCTIONAL SUPERVISOR: TIMOTHY J. LEE
STATE OF CALIFORNIA - DEPARTMENT OF TRANSPORTATION
Caltrans

X:\237_101_Mathilda\000_CAD\Sheets\1A-Drainage\1C-Details\0413000204ic006.dgn

LAST REVISION 01-15-18
DATE PLOTTED => 6/20/2018
TIME PLOTTED => 11:10:00 AM

BORDER LAST REVISED 7/2/2010 | USERNAME => Eilif | DGN FILE => 0413000204ic006.dgn | RELATIVE BORDER SCALE IS IN INCHES 0 1 2 3 | UNIT 0000 | PROJECT NUMBER & PHASE 0413000204

Dist	COUNTY	ROUTE	POST MILES TOTAL PROJECT	SHEET No.	TOTAL SHEETS
04	SCL	101,237	45.2/45.8, 2.7/3.3	121	736

REGISTERED CIVIL ENGINEER 6-13-18 DATE

6-20-18
PLANS APPROVAL DATE

REGISTERED PROFESSIONAL ENGINEER STEVE LOUPE No. 63575 Exp. 9/30/18 CIVIL STATE OF CALIFORNIA

THE STATE OF CALIFORNIA OR ITS OFFICERS OR AGENTS SHALL NOT BE RESPONSIBLE FOR THE ACCURACY OR COMPLETENESS OF SCANNED COPIES OF THIS PLAN SHEET.

WMH CORPORATION
50 W San Fernando St
Suite 950
San Jose, CA 95113

VTA
3331 N First St
Building B
San Jose, Ca 95134

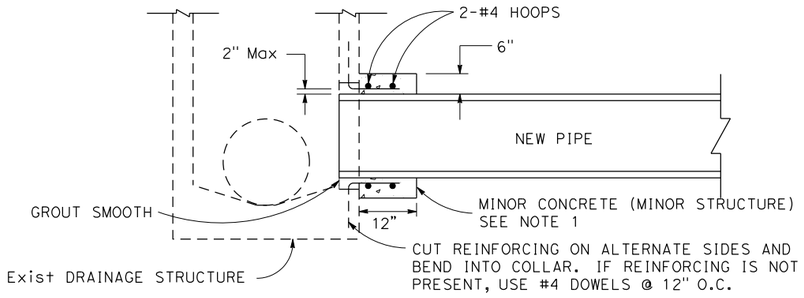

PIPE CONNECTION TO EXISTING DRAINAGE STRUCTURE

37 h 29 b

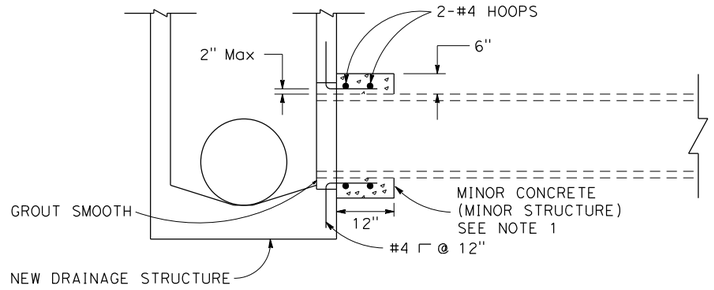

CONNECT EXISTING PIPE TO NEW DRAINAGE STRUCTURE

1 f 2 d

PIPE INNER DIAMETER (D)	B	W
UP TO 24"	2-#5 HOOPS	18"
OVER 24"	3-#5 HOOPS	24"

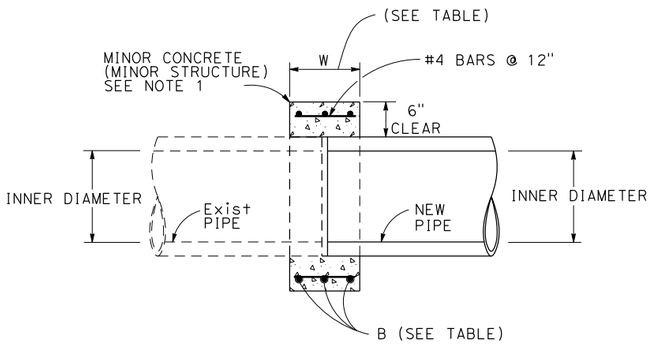

CONCRETE COLLAR

2 c 2 k 28 f 34 d
30 d 36 d 35 d 38 b 38 d
38 h 38 j 39 b 39 d

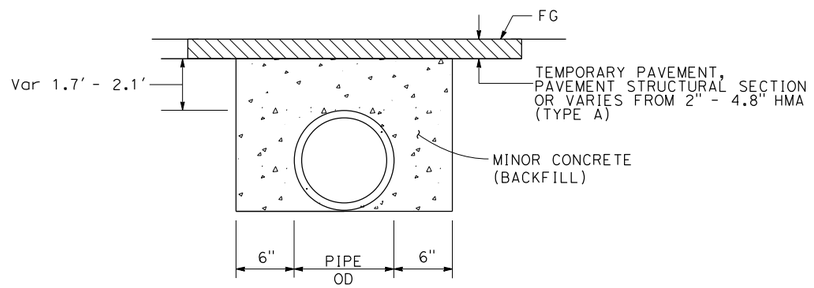

NON-REINFORCED
(SINGLE PIPE SHOWN)

MINOR CONCRETE (BACKFILL)

LESS THAN 2' COVER

2 c 2 e 2 g 2 k 2 o
2 m 5 f 18 b 37 b 37 c

DRAINAGE DETAILS

NO SCALE

DD-7

STATE OF CALIFORNIA - DEPARTMENT OF TRANSPORTATION
Caltrans
CONSULTANT FUNCTIONAL SUPERVISOR: TIMOTHY J. LEE
CALCULATED-DESIGNED BY: RICHARD SAGASTUME, SCOTT DWYER
CHECKED BY: STEVE LOUPE
REVISED BY: RS
DATE REVISED: 5/3/18

X:\237_101_Mathilda\000_CAD\Sheets\IA-Drainage\IC-Details\0413000204ic007.dgn

LAST REVISION 01-15-18
DATE PLOTTED => 6/20/2018
TIME PLOTTED => 11:10:03 AM

Dist	COUNTY	ROUTE	POST MILES TOTAL PROJECT	SHEET No.	TOTAL SHEETS
04	SCL	101,237	45.2/45.8, 2.7/3.3	122	736

REGISTERED CIVIL ENGINEER — 6-13-18 DATE

6-20-18
PLANS APPROVAL DATE

STEVE LOUPE No. 63575 Exp. 9/30/18 CIVIL — REGISTERED PROFESSIONAL ENGINEER — STATE OF CALIFORNIA

THE STATE OF CALIFORNIA OR ITS OFFICERS OR AGENTS SHALL NOT BE RESPONSIBLE FOR THE ACCURACY OR COMPLETENESS OF SCANNED COPIES OF THIS PLAN SHEET.

WMH CORPORATION
50 W San Fernando St
Suite 950
San Jose, CA 95113

VTA
3331 N First St
Building B
San Jose, Ca 95134

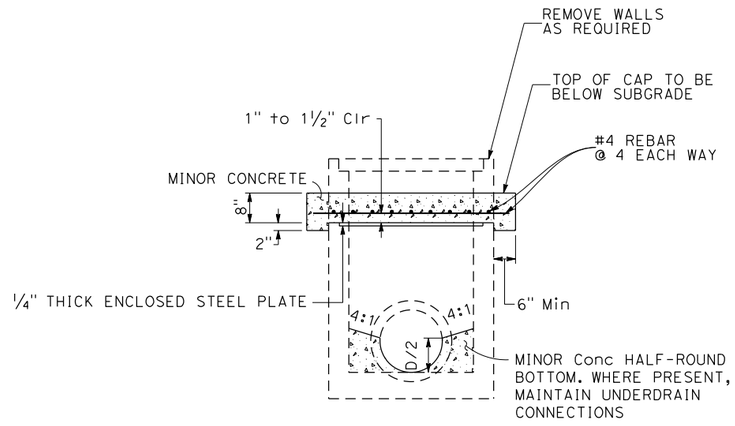

CAP INLET

DRAINAGE SYSTEM NO. 40 (a)

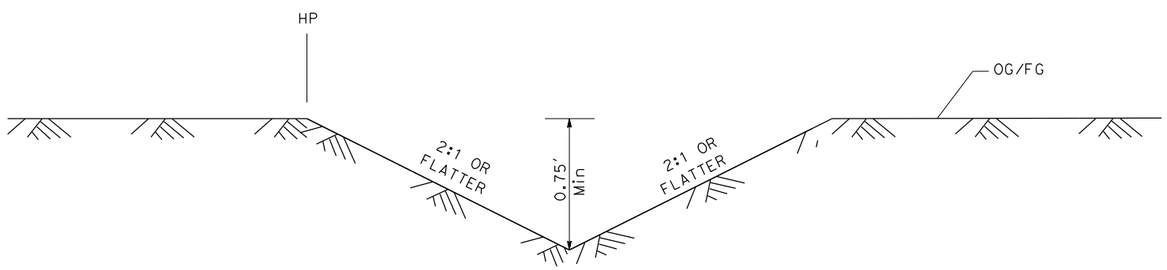

UNLINED V-DITCH

DRAINAGE DETAILS

NO SCALE

DD-8

REVISED BY	RS		
DATE REVISED	5/3/18		
CALCULATED-DESIGNED BY	RICHARD SAGASTUME SCOTT DWYER		
CHECKED BY	STEVE LOUPE		
CONSULTANT FUNCTIONAL SUPERVISOR	TIMOTHY J. LEE		
STATE OF CALIFORNIA - DEPARTMENT OF TRANSPORTATION	Caltrans		

LAST REVISION 01-15-18
DATE PLOTTED => 6/20/2018
TIME PLOTTED => 11:10:05 AM

X:\237_101_Mathilda\000_CAD\Sheets\1A-Drainage\IC-Details\0413000204ic008.dgn

BORDER LAST REVISED 7/2/2010 | USERNAME => Eilif DGN FILE => 0413000204ic008.dgn | RELATIVE BORDER SCALE IS IN INCHES 0 1 2 3 | UNIT 0000 | PROJECT NUMBER & PHASE 0413000204

Dist	COUNTY	ROUTE	POST MILES TOTAL PROJECT	SHEET No.	TOTAL SHEETS
04	SCL	101,237	45.2/45.8, 2.7/3.3	123	736

REGISTERED CIVIL ENGINEER 6-13-18 DATE

6-20-18
PLANS APPROVAL DATE

REGISTERED PROFESSIONAL ENGINEER STEVE LOUPE No. 63575 Exp. 9/30/18 CIVIL STATE OF CALIFORNIA

THE STATE OF CALIFORNIA OR ITS OFFICERS OR AGENTS SHALL NOT BE RESPONSIBLE FOR THE ACCURACY OR COMPLETENESS OF SCANNED COPIES OF THIS PLAN SHEET.

WMH CORPORATION
50 W San Fernando St
Suite 950
San Jose, CA 95113

VTA
3331 N First St
Building B
San Jose, Ca 95134

DRAINAGE SYSTEM No. 14 16 17

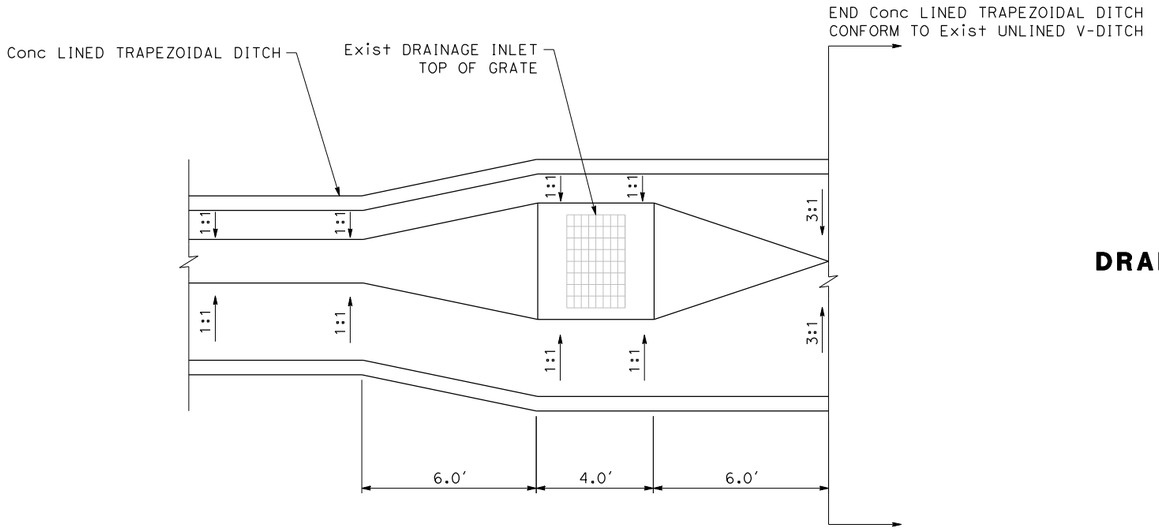

CONCRETE LINED TRAPEZOIDAL DITCH TO Exist INLET/DITCH TRANSITION

"M1" 50+38 TO 50+54

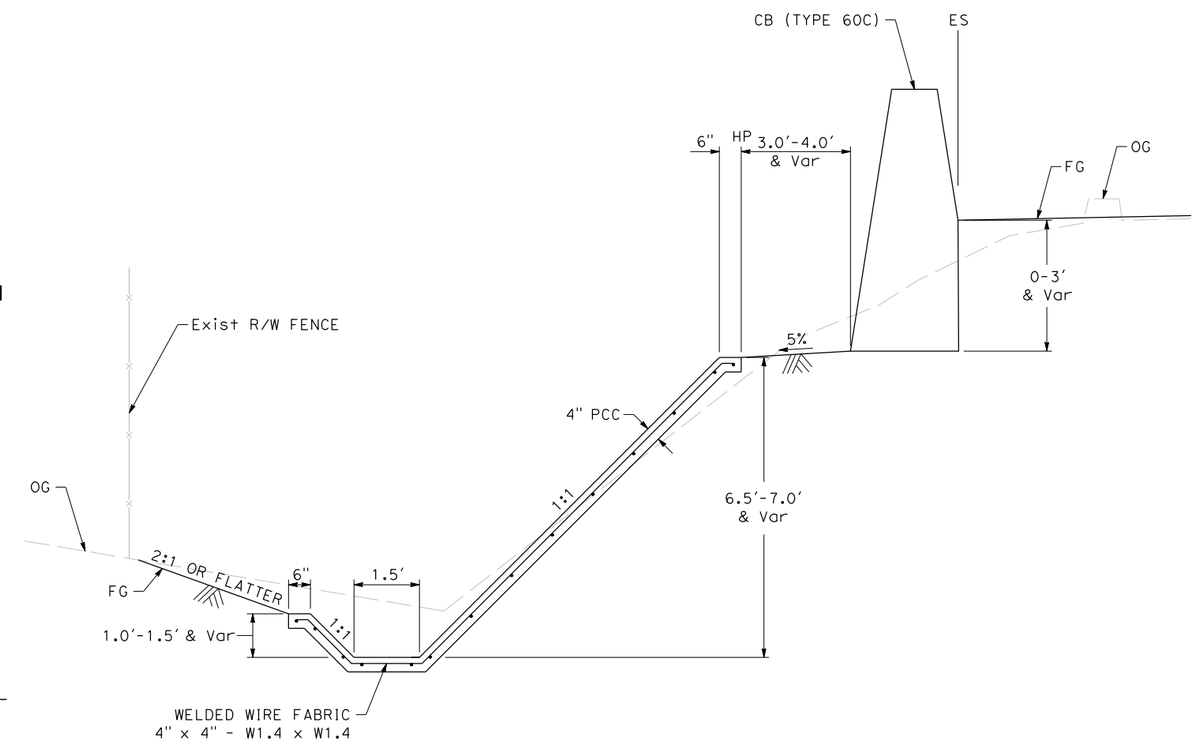

CONCRETE LINED TRAPEZOIDAL DITCH WITH TYPE 60C CONC BARRIER

"M1" 46+40 TO 47+24

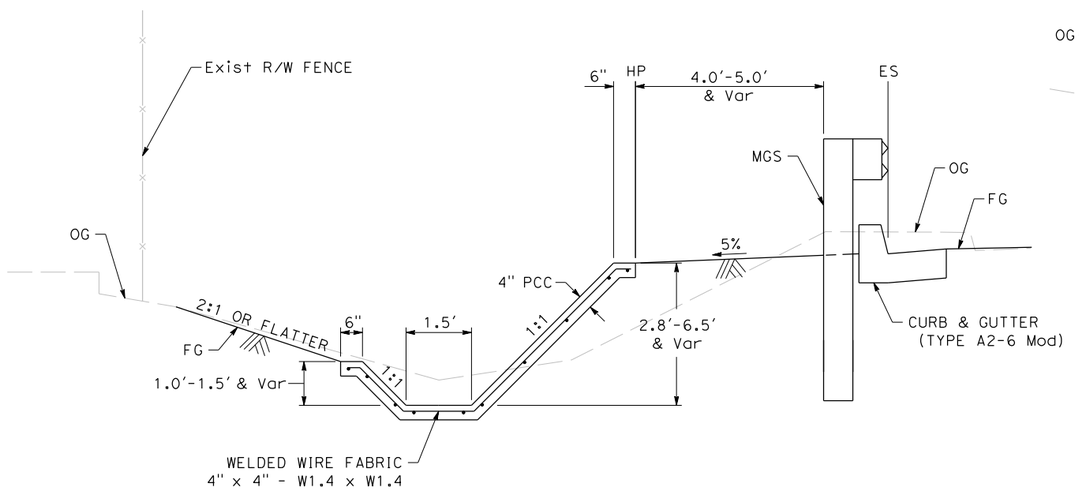

CONCRETE LINED TRAPEZOIDAL DITCH WITH MGS

"M1" 47+24 TO 50+38

DRAINAGE DETAILS

NO SCALE

DD-9

STATE OF CALIFORNIA - DEPARTMENT OF TRANSPORTATION
Caltrans

CONSULTANT FUNCTIONAL SUPERVISOR: TIMOTHY J. LEE
CALCULATED-DESIGNED BY: RICHARD SAGASTUME
CHECKED BY: SCOTT DWYER
REVISED BY: RS
DATE REVISED: 5/3/18
DAG: 09/19/18

X:\237_101_Mathilda\000_CAD\Sheets\IA-Drainage\IC-Details\0413000204ic009.dgn

LAST REVISION 01-15-18
DATE PLOTTED => 9/20/2018
TIME PLOTTED => 12:04:57 PM

BORDER LAST REVISED 7/2/2010
USERNAME => Dianneg
DGN FILE => 0413000204ic009.dgn
RELATIVE BORDER SCALE IS IN INCHES 0 1 2 3
UNIT 0000
PROJECT NUMBER & PHASE 0413000204

Dist	COUNTY	ROUTE	POST MILES TOTAL PROJECT	SHEET No.	TOTAL SHEETS
04	SCL	101,237	45.2/45.8, 2.7/3.3	124	736

REGISTERED CIVIL ENGINEER 6-13-18 DATE

6-20-18
PLANS APPROVAL DATE

REGISTERED PROFESSIONAL ENGINEER STEVE LOUPE No. 63575 Exp. 9/30/18 CIVIL STATE OF CALIFORNIA

THE STATE OF CALIFORNIA OR ITS OFFICERS OR AGENTS SHALL NOT BE RESPONSIBLE FOR THE ACCURACY OR COMPLETENESS OF SCANNED COPIES OF THIS PLAN SHEET.

WMH CORPORATION
50 W San Fernando St
Suite 950
San Jose, CA 95113

VTA
3331 N First St
Building B
San Jose, Ca 95134

NOTES:

1. SIDEWALK DRAIN INCLUDES HSS A500 GRADE B GALVANIZED STEEL RECTANGULAR HSS 12" x 4" X 3/8", CURB HELMET, AND WELDED FABRIC REINFORCEMENT.
2. 3/8" Galv STEEL ANGLE PLATE FORMED TO MATCH A1-6 CURB. CURB HELMET SHALL BE HORIZONTALLY AND VERTICALLY IN LINE WITH ADJACENT CURB OR CURB AND GUTTER.
3. SEE DRAINAGE PROFILES FOR LOCATIONS, GRADES, AND LENGTHS.

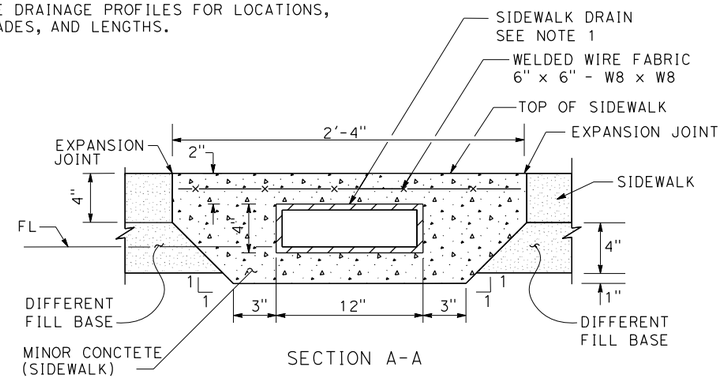

SECTION A-A

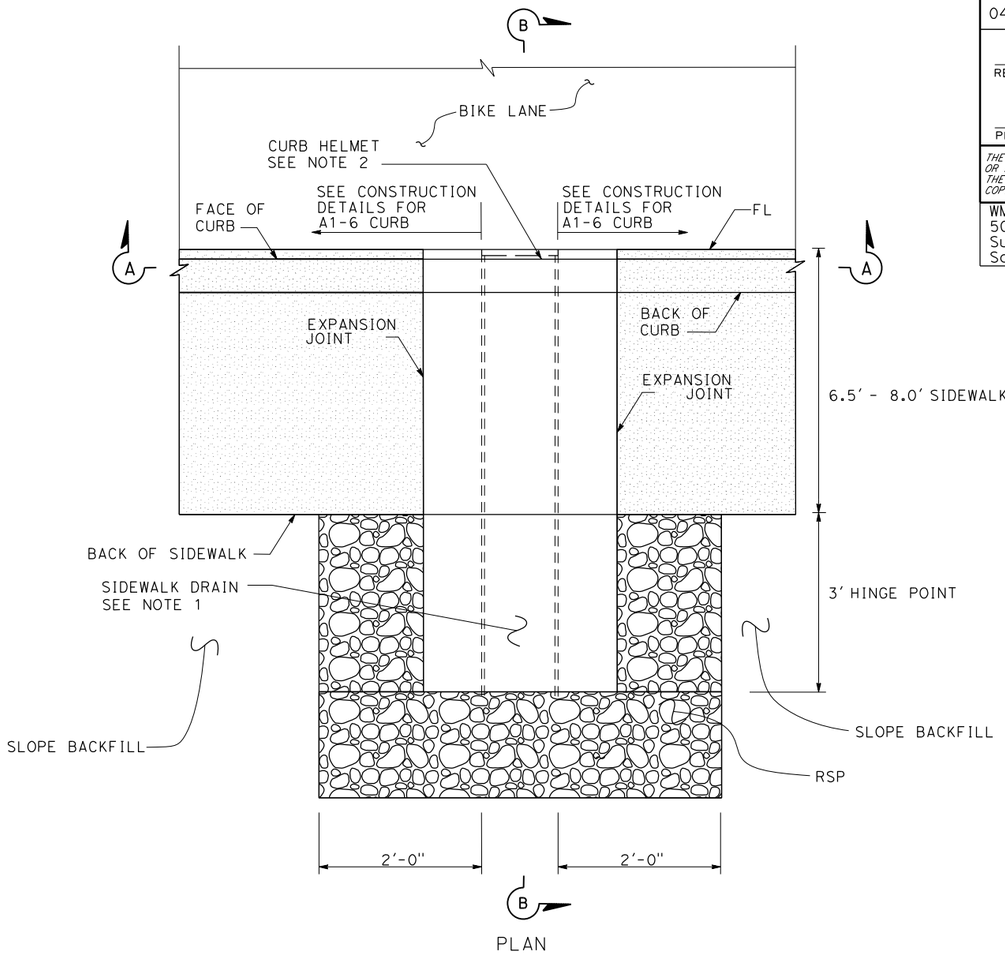

PLAN

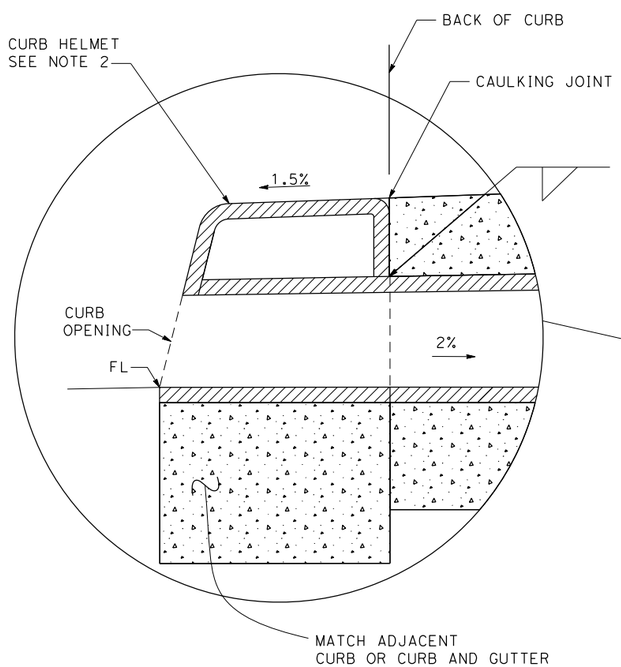

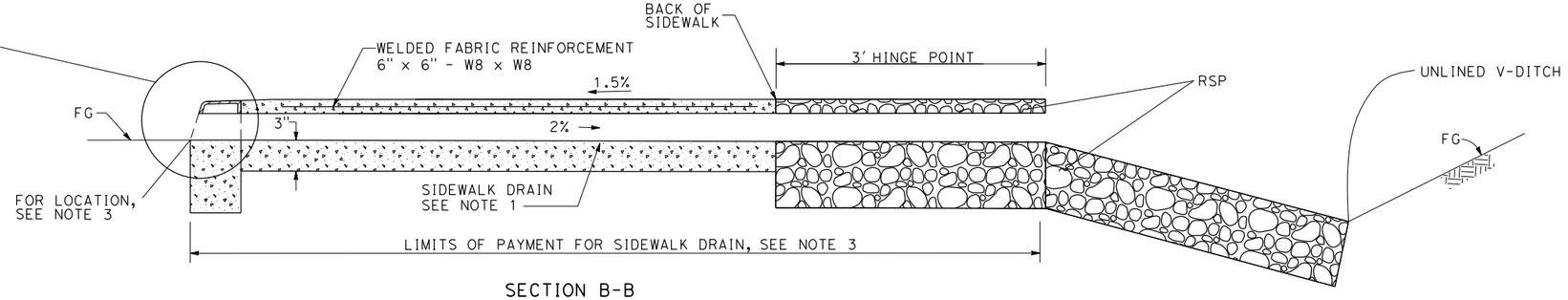

SECTION B-B

DRAINAGE SYSTEM NO. 24 a 26 a

SIDEWALK DRAIN DETAILS

DRAINAGE DETAILS

NO SCALE

DD-10

STATE OF CALIFORNIA - DEPARTMENT OF TRANSPORTATION
Caltrans
CONSULTANT FUNCTIONAL SUPERVISOR: TIMOTHY J. LEE
CALCULATED-DESIGNED BY: RICHARD SAGASTUME, SCOTT DWYER
CHECKED BY: STEVE LOUPE
REVISED BY: RS
DATE REVISED: 5/3/18

X:\237_101_Mathilda\000_CAD\Sheets\IA-Drainage\IC-Details\0413000204ic010.dgn

LAST REVISION 01-15-18
DATE PLOTTED => 6/20/2018
TIME PLOTTED => 11:10:09 AM

Dist	COUNTY	ROUTE	POST MILES TOTAL PROJECT	SHEET No.	TOTAL SHEETS
04	SCL	101,237	45.2/45.8, 2.7/3.3	125	736

REGISTERED CIVIL ENGINEER 6-13-18 DATE

6-20-18
PLANS APPROVAL DATE

REGISTERED PROFESSIONAL ENGINEER STEVE LOUPE No. 63575 Exp. 9/30/18 CIVIL STATE OF CALIFORNIA

THE STATE OF CALIFORNIA OR ITS OFFICERS OR AGENTS SHALL NOT BE RESPONSIBLE FOR THE ACCURACY OR COMPLETENESS OF SCANNED COPIES OF THIS PLAN SHEET.

WMH CORPORATION
50 W San Fernando St
Suite 950
San Jose, CA 95113

VTA
3331 N First St
Building B
San Jose, Ca 95134

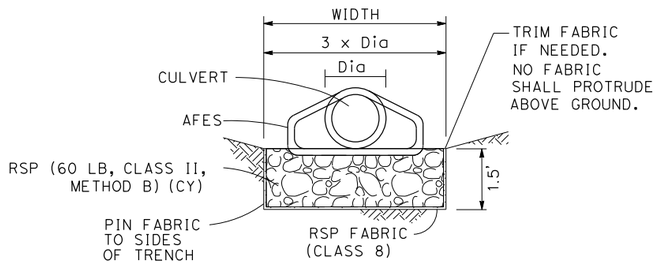

SECTION A-A

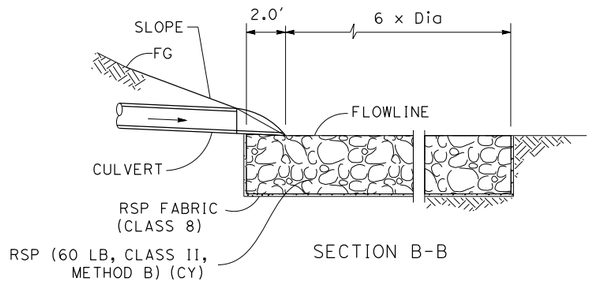

SECTION B-B

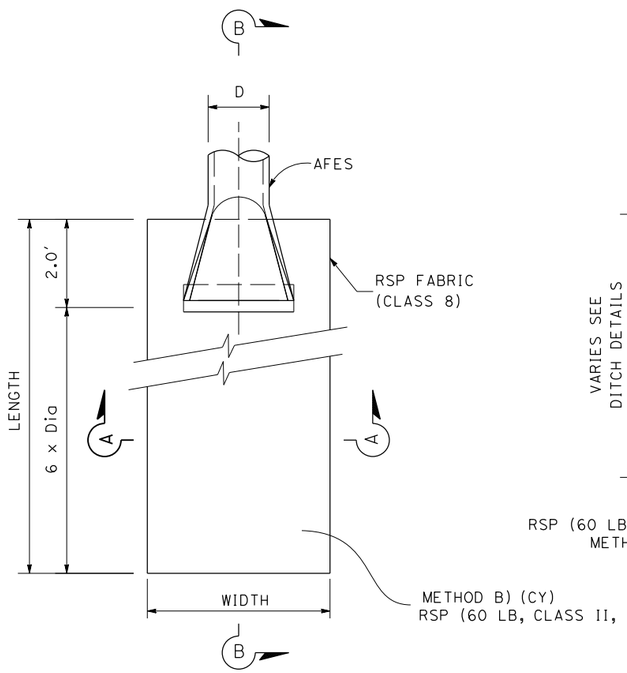

PLAN

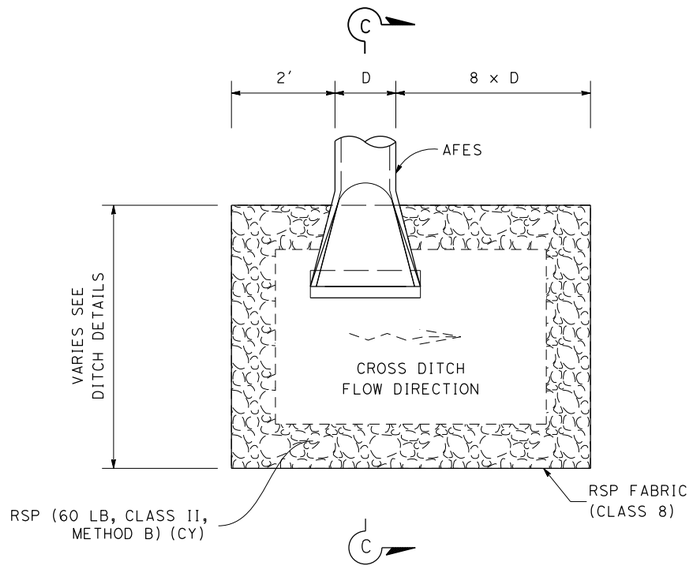

PLAN VIEW

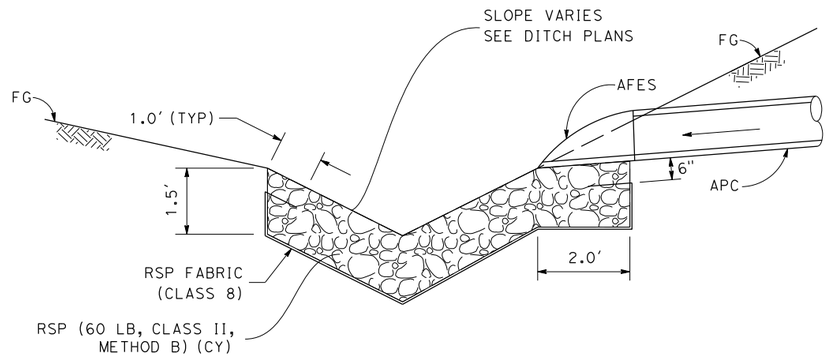

SECTION C-C

ROCK SLOPE PROTECTION AT CULVERT DRAINAGE SYSTEM NO.

5 h 6 d
7 d 18 d
27 s

ROCK SLOPE PROTECTION AT CULVERT DRAINAGE SYSTEM NO.

2 u 12 g 13 e
20 f 21 m 22 d
24 d 25 b 26 b
32 d 40 d

DRAINAGE DETAILS

NO SCALE

DD-11

STATE OF CALIFORNIA - DEPARTMENT OF TRANSPORTATION
Caltrans

CONSULTANT FUNCTIONAL SUPERVISOR: TIMOTHY J. LEE
CALCULATED-DESIGNED BY: RICHARD SAGASTUME, SCOTT DWYER
CHECKED BY: STEVE LOUPE
REVISED BY: RS
DATE REVISED: 5/3/18

X:\237_101_Mathilda\000_CAD\Sheets\IA-Drainage\IC-Details\0413000204ic011.dgn

LAST REVISION 01-15-18
DATE PLOTTED => 6/20/2018
TIME PLOTTED => 11:10:12 AM

BORDER LAST REVISED 7/2/2010
USERNAME => Eilif
DGN FILE => 0413000204ic011.dgn
RELATIVE BORDER SCALE IS IN INCHES 0 1 2 3
UNIT 0000
PROJECT NUMBER & PHASE 0413000204

NOTES:

FOR DETAILS NOT SHOWN
SEE Std PLANS D87D

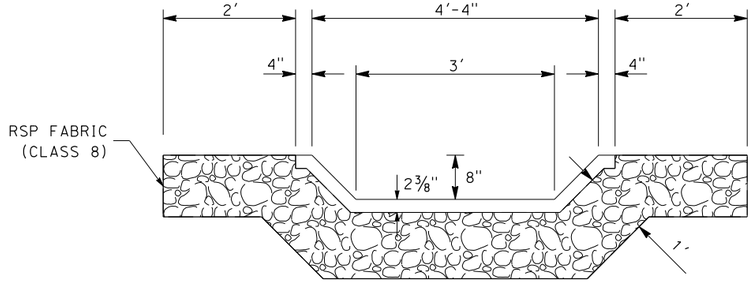

SECTION A-A

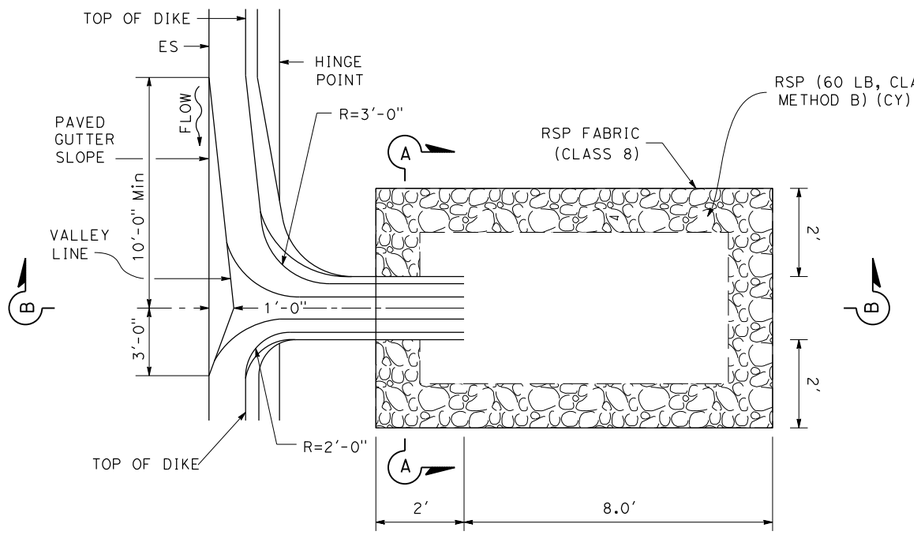

PLAN VIEW

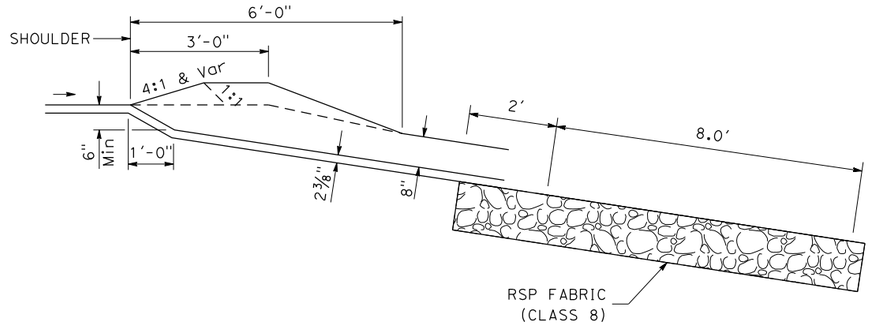

SECTION B-B

ROCK SLOPE PROTECTION AT HMA OVERSIDE DRAIN

DRAINAGE SYSTEM NO.

3 b 8 b 9 b
11 b 19 b 31 b

DRAINAGE DETAILS

NO SCALE

DD-12

Dist	COUNTY	ROUTE	POST MILES TOTAL PROJECT	SHEET No.	TOTAL SHEETS
04	SCL	101,237	45.2/45.8, 2.7/3.3	126	736

REGISTERED CIVIL ENGINEER — DATE 6-13-18

6-20-18
PLANS APPROVAL DATE

STEVE LOUPE No. 63575 Exp. 9/30/18 CIVIL — REGISTERED PROFESSIONAL ENGINEER — STATE OF CALIFORNIA

THE STATE OF CALIFORNIA OR ITS OFFICERS OR AGENTS SHALL NOT BE RESPONSIBLE FOR THE ACCURACY OR COMPLETENESS OF SCANNED COPIES OF THIS PLAN SHEET.

WMH CORPORATION
50 W San Fernando St
Suite 950
San Jose, CA 95113

VTA
3331 N First St
Building B
San Jose, Ca 95134

DATE	REVISED BY	DESCRIPTION
5/3/18	RS	

CALCULATED-DESIGNED BY: RICHARD SAGASTUME, SCOTT DWYER
CHECKED BY: STEVE LOUPE
CONSULTANT FUNCTIONAL SUPERVISOR: TIMOTHY J. LEE
STATE OF CALIFORNIA - DEPARTMENT OF TRANSPORTATION — Caltrans

LAST REVISION 01-15-18
DATE PLOTTED => 6/20/2018
TIME PLOTTED => 11:10:15 AM

X:\237_101_Mathilda\000_CAD\Sheets\IA-Drainage\IC-Details\0413000204ic012.dgn

BORDER LAST REVISED 7/2/2010 | USERNAME => Eilif | DGN FILE => 0413000204ic012.dgn | RELATIVE BORDER SCALE IS IN INCHES 0 1 2 3 | UNIT 0000 | PROJECT NUMBER & PHASE 0413000204

Dist	COUNTY	ROUTE	POST MILES TOTAL PROJECT	SHEET No.	TOTAL SHEETS
04	SCL	101,237	45.2/45.8, 2.7/3.3	127	736

REGISTERED CIVIL ENGINEER — 6-13-18 DATE

6-20-18
PLANS APPROVAL DATE

REGISTERED PROFESSIONAL ENGINEER — STEVE LOUPE — No. 63575 — Exp. 9/30/18 — CIVIL — STATE OF CALIFORNIA

THE STATE OF CALIFORNIA OR ITS OFFICERS OR AGENTS SHALL NOT BE RESPONSIBLE FOR THE ACCURACY OR COMPLETENESS OF SCANNED COPIES OF THIS PLAN SHEET.

WMH CORPORATION
50 W San Fernando St
Suite 950
San Jose, CA 95113

VTA
3331 N First St
Building B
San Jose, Ca 95134

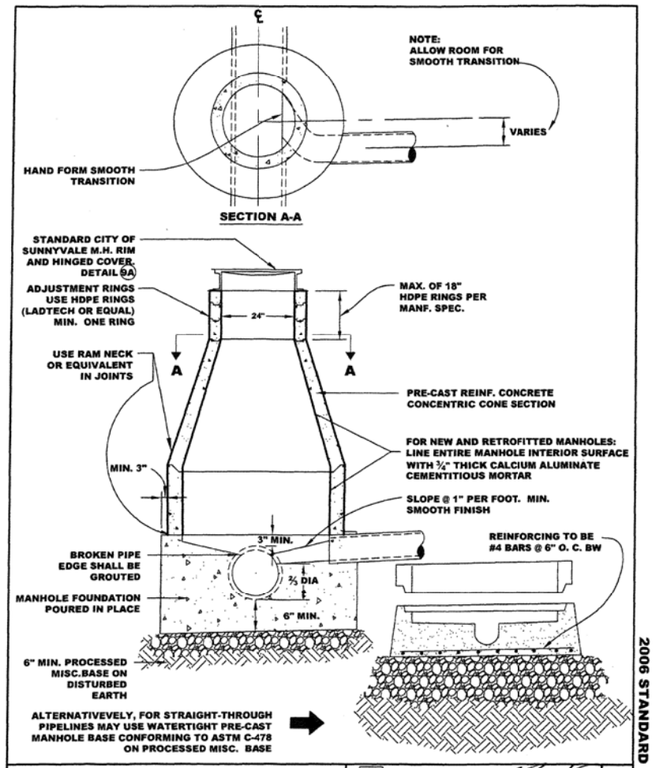

TYPE I - CONCENTRIC MANHOLE 8" TO 33" PIPE

APPROVED BY:

DATE : JUNE 30, 2006
REVISED : APRIL, 2013

DWG. 1A

2006 STANDARD DETAILS

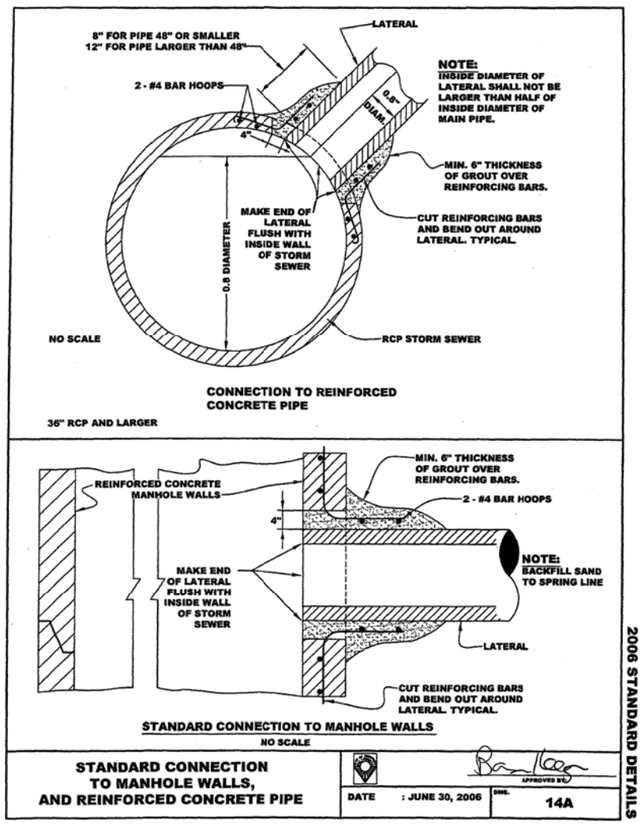

STANDARD CONNECTION TO MANHOLE WALLS, AND REINFORCED CONCRETE PIPE

APPROVED BY:

DATE : JUNE 30, 2006

DWG. 14A

2006 STANDARD DETAILS

MANHOLE FRAME SHALL BE INSTALLED WITH THE HINGE ORIENTED TO THE DIRECTION OF TRAFFIC SO THAT WERE IT TO BE HIT, IT WILL FALL INTO THE CLOSED POSITION.

ALL MATERIALS USED IN MANUFACTURING SHALL CONFORM TO ISO 1083.

COVER MARKINGS SHALL BE "SANITARY SEWER" FOR SANITARY SEWER MANHOLES OR "STORM DRAIN", "STORM SEWER", OR "STORM" FOR STORM DRAIN MANHOLES UNLESS OTHERWISE SPECIFIED. COVER MARKINGS SHALL BE EMBOSSED/CAST ONTO THE MANHOLE.

CASTINGS SHALL BE DIPPED IN BLACK BITUMINOUS PAINT. MANUFACTURER SHALL CERTIFY THAT FRAME AND COVER MEET ALL LOAD REQUIREMENTS FOR H-20 HIGHWAY LOADING.

ADJUSTMENT RINGS: USE HDPE RINGS (LADTECH OR EQUAL) MIN. ONE RING

OPTIONAL LOCKING MECHANISM

FRAME MARKING

DETAIL A: LIFTING HOLES

A-A

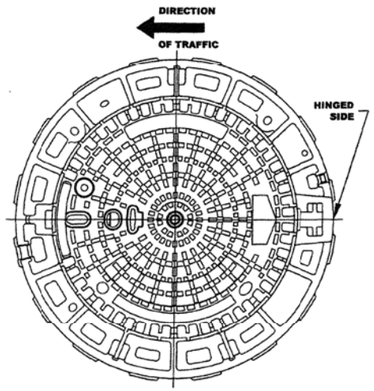

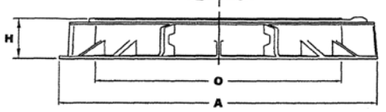

DIMENSIONS (INCHES)			WEIGHT (lbs)		REFERENCE
A	O	H	COVER AND FRAME	COVER ONLY	
33 1/2"	24	4	195	122	CDPA60EHSSE

FOR ALL NEW AND RETROFITTED MANHOLES

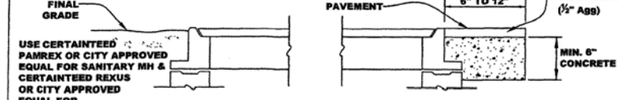

HINGED MANHOLE RIM & COVER

APPROVED BY:

DATE : JUNE 30, 2006
REVISED : APRIL 21, 2014

DWG. 9A

2006 STANDARD DETAILS

DRAINAGE DETAILS

NO SCALE

DD-13

RICHARD SAGASTUME SCOTT DWYER	RS		
STEVE LOUPE	5/3/18		
CALCULATED-DESIGNED BY	REVISED BY		
CHECKED BY	DATE REVISED		

TIMOTHY J. LEE
SUPERVISOR

CONSULTANT FUNCTIONAL SUPERVISOR

STATE OF CALIFORNIA - DEPARTMENT OF TRANSPORTATION

Caltrans

X:\237_101_Mathilda\000_CAD\Sheets\1A-Drainage\1C-Details\0413000204ic013.dgn

LAST REVISION: 01-15-18
DATE PLOTTED => 6/20/2018
TIME PLOTTED => 11:10:19 AM

BORDER LAST REVISED 7/2/2010 | USERNAME => Eilif | DGN FILE => 0413000204ic013.dgn | RELATIVE BORDER SCALE IS IN INCHES 0 1 2 3 | UNIT 0000 | PROJECT NUMBER & PHASE 0413000204

Dist	COUNTY	ROUTE	POST MILES TOTAL PROJECT	SHEET No.	TOTAL SHEETS
04	SCL	101,237	45.2/45.8, 2.7/3.3	128	736

6-13-18
REGISTERED CIVIL ENGINEER DATE

6-20-18
PLANS APPROVAL DATE

REGISTERED PROFESSIONAL ENGINEER
STEVE LOUPE
No. 63575
Exp. 9/30/18
CIVIL
STATE OF CALIFORNIA

THE STATE OF CALIFORNIA OR ITS OFFICERS OR AGENTS SHALL NOT BE RESPONSIBLE FOR THE ACCURACY OR COMPLETENESS OF SCANNED COPIES OF THIS PLAN SHEET.

WMH CORPORATION
50 W San Fernando St
Suite 950
San Jose, CA 95113

VTA
3331 N First St
Building B
San Jose, Ca 95134

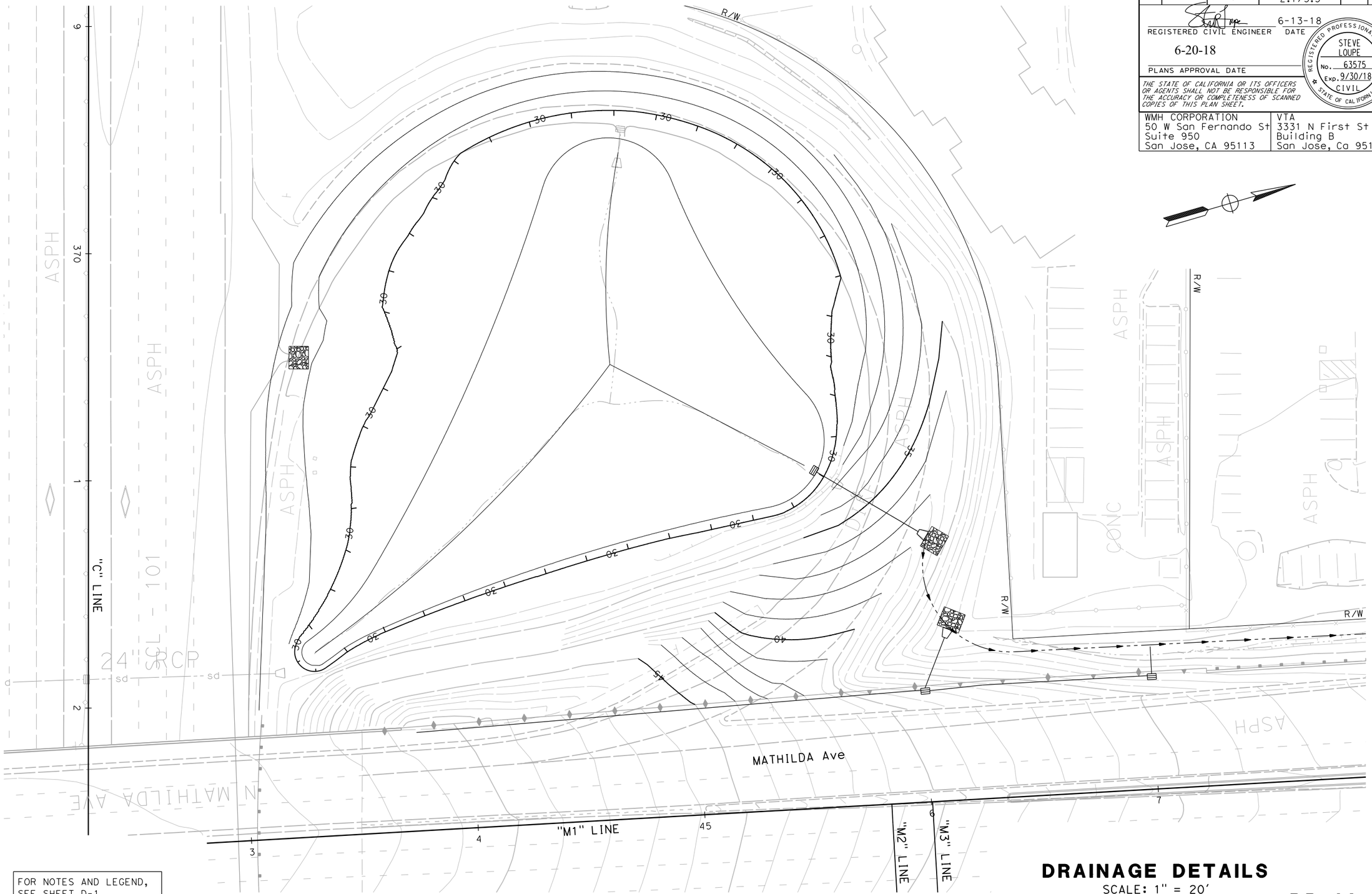

FOR NOTES AND LEGEND, SEE SHEET D-1

DRAINAGE DETAILS

SCALE: 1" = 20'

DD-14

STATE OF CALIFORNIA - DEPARTMENT OF TRANSPORTATION	CONSULTANT FUNCTIONAL SUPERVISOR: TIMOTHY J. LEE	CALCULATED-DESIGNED BY: SCOTT DWYER	REVISED BY: SMD (5/4/18)
Caltrans		CHECKED BY: STEVE LOUPE	DATE REVISED: SMD (9/21/18)

LAST REVISION: 01-15-18
DATE PLOTTED => 9/21/2018
TIME PLOTTED => 12:20:15 PM

X:\237_101_Mathilda\000_CAD\Sheets\IA-Drainage\IC-Details\0413000204ic014.dgn

BORDER LAST REVISED 7/2/2010 | USERNAME => sdwyer | DGN FILE => 0413000204ic014.dgn | RELATIVE BORDER SCALE IS IN INCHES 0 1 2 3 | UNIT 0000 | PROJECT NUMBER & PHASE 0413000204

APC ALLOWABLE PIPE MATERIAL AND PROTECTION

DESCRIPTION	RCP	PLASTIC PIPE		CSP	SSRP
		TYPE S	PVC	POLYMERIC SHEET COATING THICKNESS (Min)	
12" APC	YES	YES	YES	0.052"	NO
15" APC	YES	YES	YES	0.052"	NO
18" APC	YES	YES	YES	0.064"	NO
24" APC (TYPE A)	YES	YES	YES	0.064"	0.064"
24" APC (TYPE B)	YES	NO	YES	NO	NO
30" APC (TYPE A)	YES	YES	YES	0.064"	0.064"
30" APC (TYPE B)	YES	NO	YES	NO	NO

ABBREVIATIONS

(N) NOT A SEPARATE PAY ITEM
S STANDARD JOINT TYPE
OSD OVER SIDE DRAIN

Dist	COUNTY	ROUTE	POST MILES TOTAL PROJECT	SHEET No.	TOTAL SHEETS
04	SCL	101,237	45.2/45.8, 2.7/3.3	129	736

6-13-18
REGISTERED CIVIL ENGINEER DATE

6-20-18
PLANS APPROVAL DATE

REGISTERED PROFESSIONAL ENGINEER — STEVE LOUPE — No. 63575 — Exp. 9/30/18 — CIVIL — STATE OF CALIFORNIA

THE STATE OF CALIFORNIA OR ITS OFFICERS OR AGENTS SHALL NOT BE RESPONSIBLE FOR THE ACCURACY OR COMPLETENESS OF SCANNED COPIES OF THIS PLAN SHEET.

WMH CORPORATION
50 W San Fernando St
Suite 950
San Jose, CA 95113

VTA
3331 N First St
Building B
San Jose, Ca 95134

DRAINAGE QUANTITIES

DRAINAGE SHEET No.	DRAINAGE SYSTEM No.	DRAINAGE UNIT	REMOVE FLARED END SECTION	REMOVE INLET	CAP INLET	REMOVE CULVERT	CLEANING, INSPECTING, AND PREPARING CULVERT	ALTERNATIVE PIPE CULVERT 12"	15"	18"	24"	30"	REINFORCED CONCRETE PIPE 12" (CLASS V)	18" (CLASS III)	24" (CLASS III)	ALTERNATIVE FLARED END SECTION 12"	18"	24"	30"	DESCRIPTION	STATION	DRAINAGE SHEET No.	DRAINAGE SYSTEM No.	DRAINAGE UNIT
			EA			LF		LF								EA								
D-1	1	a					99.0													CLEANING, INSPECTING, AND PREPARING Culv		D-1	1	a
		b																		CITY GO Mod DI W/ PIPE CONNECTION (W/ PIPE SCREEN INSERT)	76.45' Lt "M1" 29+79.94			b
		c				11.1														Rem Culv				c
		d								8.4										18" APC W/ MINOR Conc BACKFILL				d
		e		1																Rem INLET				e
		f																		MH (CITY TYPE 1) W/ PIPE CONNECTION	77.30' Lt "M1" 29+86.91			f
D-2	2	a		1																Rem INLET		D-2	2	a
		b				10.3														Rem Culv				b
		c								7.9										18" APC W/ Conc Collar				c
		d																		OL-10 Mod	36.71' Rt "M1" 36+14.50			d
		e								8.5										18" APC w/ MINOR Conc BACKFILL				e
		f																		OS DI W/ PIPE CONNECTION	36.88' Rt "M1" 36+02.54			f
		g								8.5										18" APC W/ MINOR Conc BACKFILL				g
		h																		OL-10 Mod	36.80' Rt "M1" 35+90.59			h
		i					74.0													CLEANING, INSPECTING, AND PREPARING Culv				i
		j		1																Rem INLET				j
		k												15.0						18" RCP w/ MINOR Conc BACKFILL & Conc COLLAR				k
		l																		OL-14 Mod	52.45' Lt "M1" 35+93.66			l
		m								7.7										18" APC w/ MINOR Conc BACKFILL				m
		n																		OS DI	50.22' Lt "M1" 36+03.52			n
		o								11.6										18" APC w/ MINOR Conc BACKFILL				o
		p																		OS DI	47.88' Lt "M1" 36+18.31			p
		q				60.1														Rem Culv				q
		r	1																	Rem FES				r
		s								25.8										18"APC				s
		t															1			18" AFES	77.92' Lt "M1" 36+18.78			t
		u																		RSP				u
			1	3		81.5	173.0			78.4				15.0			1			SUBTOTAL (DQ-1)				

APPROVED FOR DRAINAGE WORK ONLY

DRAINAGE QUANTITIES
DQ-1

RICHARD SAGASTUME — REVISED BY — RS — 5/3/18
STEVE LOUPE — DATE REVISED
CALCULATED-DESIGNED BY
CHECKED BY
TIMOTHY J. LEE — CONSULTANT FUNCTIONAL SUPERVISOR
STATE OF CALIFORNIA - DEPARTMENT OF TRANSPORTATION — Caltrans

LAST REVISION 01-15-18
DATE PLOTTED => 9/17/2018
TIME PLOTTED => 7:43:22 PM

X:\237_101_Mathilda\000_CAD\Sheets\1A-Drainage\1D-Quantities\0413000204id001.dgn

BORDER LAST REVISED 7/2/2010 | USERNAME => rsagastume | DGN FILE => 0413000204id001.dgn | RELATIVE BORDER SCALE IS IN INCHES 0 1 2 3 | UNIT 0000 | PROJECT NUMBER & PHASE 0413000204

Dist	COUNTY	ROUTE	POST MILES TOTAL PROJECT	SHEET No.	TOTAL SHEETS
04	SCL	101,237	45.2/45.8, 2.7/3.3	130	736

REGISTERED CIVIL ENGINEER — DATE: 6-13-18

PLANS APPROVAL DATE: 6-20-18

REGISTERED PROFESSIONAL ENGINEER — STEVE LOUPE — No. 63575 — Exp. 9/30/18 — CIVIL — STATE OF CALIFORNIA

THE STATE OF CALIFORNIA OR ITS OFFICERS OR AGENTS SHALL NOT BE RESPONSIBLE FOR THE ACCURACY OR COMPLETENESS OF SCANNED COPIES OF THIS PLAN SHEET.

WMH CORPORATION
50 W San Fernando St
Suite 950
San Jose, CA 95113

VTA
3331 N First St
Building B
San Jose, Ca 95134

DRAINAGE QUANTITIES

DRAINAGE SHEET No.	DRAINAGE SYSTEM No.	DRAINAGE UNIT	PIPE JOINT CLASSIFICATION (N)	GRATE/COVER (N) EACH: TYPE 24-12 (N)	GRATE/COVER (N) EACH: TYPE 24-10C (N)	GRATE/COVER (N) EACH: PLATE (N)	GRATE/COVER (N) EACH: HINGED MH RIM & COVER (N)	ROCK SLOPE PROTECTION (60 LB, CLASS II, METHOD B) CY	ROCK SLOPE PROTECTION FABRIC (CI 8) SQYD	MAXIMUM COVER (N) FT	DRAINAGE: DESIGN HEIGHT "H" (N) LF	DRAINAGE: SIDEWALK DRAIN (N) LF	DRAINAGE: GRATED LINE DRAIN LF	DRAINAGE: MISCELLANEOUS IRON AND STEEL LB	DRAINAGE: STRUCTURAL CONCRETE, DRAINAGE INLET CY	MINOR Conc: MISCELLANEOUS CONSTRUCTION CY	MINOR Conc: BACKFILL CY	MINOR Conc: GUTTER DEPRESSION CY	CONCRETE (DITCH LINING) CY	HOT MIX ASPHALT (TYPE A) TON	PLACE HOT MIX ASPHALT (MISC AREA) SQYD	DESCRIPTION	STATION	DRAINAGE SHEET No.	DRAINAGE SYSTEM No.	DRAINAGE UNIT
D-1	1	a																					CLEANING, INSPECTING, AND PREPARING Culv		D-1	1	a
		b				1				1.0	2.8			174	1.3	0.1							CITY GO Mod DI W/ PIPE CONNECTION (W/ PIPE SCREEN INSERT)	76.45' Lt "M1" 29+79.94			b
		c																					Rem Culv				c
		d	S														1.2						18" APC W/ MINOR Conc BACKFILL				d
		e																					Rem INLET				e
		f					1			1.6	3.5			195	1.1								MH (CITY TYPE 1) W/ PIPE CONNECTION	77.30' Lt "M1" 29+86.91			f
D-2	2	a																					Rem INLET		D-2	2	a
		b																					Rem Culv				b
		c	S													0.2							18" APC W/ Conc Collar				c
		d				1				1.5	3.5			174	3.0								OL-10 Mod	36.71' Rt "M1" 36+14.50			d
		e	S														1.7						18" APC w/ MINOR Conc BACKFILL				e
		f				1				1.6	3.5			174	1.7	0.1							OS DI W/ PIPE CONNECTION	36.88' Rt "M1" 36+02.54			f
		g	S														1.7						18" APC W/ MINOR Conc BACKFILL				g
		h				1				1.7	3.5			174	3.0								OL-10 Mod	36.80' Rt "M1" 35+90.59			h
		i																					CLEANING, INSPECTING, AND PREPARING Culv				i
		j																					Rem INLET				j
		k	S													0.1	3.6						18" RCP w/ MINOR Conc BACKFILL & Conc COLLAR				k
		l				1				1.1	3.1			174	3.8								OL-14 Mod	52.45' Lt "M1" 35+93.66			l
		m	S														2.5						18" APC w/ MINOR Conc BACKFILL				m
		n				1				1.4	3.2			174	1.6								OS DI	50.22' Lt "M1" 36+03.52			n
		o	S														3.5						18" APC w/ MINOR Conc BACKFILL				o
		p				1				1.8	3.5			174	1.7								OS DI	47.88' Lt "M1" 36+18.31			p
		q																					Rem Culv				q
		r																					Rem FES				r
		s	S																				18"APC				s
		t																					18" AFES	77.92' Lt "M1" 36+18.78			t
		u						9.4	28.0														RSP				u
				7			1	9.4	28.0					1413	17.2	0.5	14.2						SUBTOTAL (DQ-2)				

APPROVED FOR DRAINAGE WORK ONLY

DRAINAGE QUANTITIES
DQ-2

CALCULATED-DESIGNED BY	RICHARD SAGASTUME	REVISED BY	RS
CHECKED BY	STEVE LOUPE	DATE REVISED	5/3/18

CONSULTANT FUNCTIONAL SUPERVISOR: TIMOTHY J. LEE

STATE OF CALIFORNIA - DEPARTMENT OF TRANSPORTATION

Caltrans

LAST REVISION | DATE PLOTTED => 9/17/2018 | TIME PLOTTED => 7:43:25 PM | 01-15-18

X:\237_101_Mathilda\000_CAD\Sheets\1A-Drainage\1D-Quantities\0413000204id002.dgn

BORDER LAST REVISED 7/2/2010 | USERNAME => rsagastume | DGN FILE => 0413000204id002.dgn | RELATIVE BORDER SCALE IS IN INCHES 0 1 2 3 | UNIT 0000 | PROJECT NUMBER & PHASE 0413000204

Dist	COUNTY	ROUTE	POST MILES TOTAL PROJECT	SHEET No.	TOTAL SHEETS
04	SCL	101,237	45.2/45.8, 2.7/3.3	131	736

6-13-18
REGISTERED CIVIL ENGINEER DATE

6-20-18
PLANS APPROVAL DATE

REGISTERED PROFESSIONAL ENGINEER
STEVE LOUPE
No. 63575
Exp. 9/30/18
CIVIL
STATE OF CALIFORNIA

THE STATE OF CALIFORNIA OR ITS OFFICERS OR AGENTS SHALL NOT BE RESPONSIBLE FOR THE ACCURACY OR COMPLETENESS OF SCANNED COPIES OF THIS PLAN SHEET.

WMH CORPORATION
50 W San Fernando St
Suite 950
San Jose, CA 95113

VTA
3331 N First St
Building B
San Jose, Ca 95134

DRAINAGE QUANTITIES

DRAINAGE SHEET No.	DRAINAGE SYSTEM No.	DRAINAGE UNIT	REMOVE FLARED END SECTION (EA)	REMOVE INLET (EA)	CAP INLET (EA)	REMOVE CULVERT (LF)	CLEANING, INSPECTING, AND PREPARING CULVERT (LF)	ALTERNATIVE PIPE CULVERT 12" (LF)	15" (LF)	18" (LF)	24" (LF)	30" (LF)	REINFORCED CONCRETE PIPE 12" (CLASS V) (LF)	18" (CLASS III) (LF)	24" (CLASS III) (LF)	ALTERNATIVE FLARED END SECTION 12" (EA)	18" (EA)	24" (EA)	30" (EA)	DESCRIPTION	STATION	DRAINAGE SHEET No.	DRAINAGE SYSTEM No.	DRAINAGE UNIT
D-1	3	a																		HMA OSD		D-1	3	a
		b																		RSP				b
D-1	4	a	1																	Rem FES		D-1	4	a
		b				61.8														Rem Culv				b
		c		1																Rem INLET				c
		d				56.0														Rem Culv				d
		e	1																	Rem FES				e
		f				73.1														Rem Culv				f
		g	1																	Rem FES				g
D-1	5	a															1			18 " AFES	89.59' Lt "M5" 72+33.49	D-1	5	a
		b								209.9										18" APC				b
		c															1			18" AFES	17.45' Lt "M6" 67+99.74			c
		d								65.5										18" APC				d
		e																		G2 DI W/ SGD	8.47' Lt "M6" 67+37.26			e
		g								50.0										18" APC W/ MINOR Conc BACKFILL				f
		h															1			18" AFES	42.95' Rt "M6" 67+37.26			g
																				RSP				h
D-1	6	a																		OS DI	44.65' Lt "M1" 39+60.00	D-1	6	a
		b								38.4										18" APC				b
		c															1			18" AFES	87.53' Lt "M1" 39+60.25			c
		d																		RSP				d
D-1	7	a																		G2 DI W/ SGD	9.00' Lt "M6" 65+58.00	D-1	7	a
		b								67.9										18" APC				b
		c															1			18" AFES	62.35' Lt "M6" 65+58.00			c
		d																		RSP				d
		e																		GLD	7.75' Lt "M6" 65+02.77			e
D-1	8	a																		HMA OSD		D-1	8	a
		b																		RSP				b
D-2	9	a																		HMA OSD		D-2	9	a
		b																		RSP				b
			3	1		191.0				431.6							5			SUBTOTAL (DQ-3)				

APPROVED FOR DRAINAGE WORK ONLY

DRAINAGE QUANTITIES
DQ-3

RICHARD SAGASTUME	REVISED BY	RS	CALCULATED-DESIGNED BY		
STEVE LOUPE	DATE REVISED	5/3/18	CHECKED BY		

CONSULTANT FUNCTIONAL SUPERVISOR: TIMOTHY J. LEE

STATE OF CALIFORNIA - DEPARTMENT OF TRANSPORTATION

LAST REVISION 01-15-18 | DATE PLOTTED => 9/17/2018 | TIME PLOTTED => 7:43:26 PM

X:\237_101_Mathilda\000_CAD\Sheets\1A-Drainage\1D-Quantities\04130002041d003.dgn

BORDER LAST REVISED 7/2/2010 | USERNAME => rsagastume | DGN FILE => 04130002041d003.dgn | RELATIVE BORDER SCALE IS IN INCHES 0 1 2 3 | UNIT 0000 | PROJECT NUMBER & PHASE 0413000204

Dist	COUNTY	ROUTE	POST MILES TOTAL PROJECT	SHEET No.	TOTAL SHEETS
04	SCL	101,237	45.2/45.8, 2.7/3.3	132	736

REGISTERED CIVIL ENGINEER — DATE: 6-13-18

6-20-18
PLANS APPROVAL DATE

REGISTERED PROFESSIONAL ENGINEER — STEVE LOUPE — No. 63575 — Exp. 9/30/18 — CIVIL — STATE OF CALIFORNIA

THE STATE OF CALIFORNIA OR ITS OFFICERS OR AGENTS SHALL NOT BE RESPONSIBLE FOR THE ACCURACY OR COMPLETENESS OF SCANNED COPIES OF THIS PLAN SHEET.

WMH CORPORATION
50 W San Fernando St
Suite 950
San Jose, CA 95113

VTA
3331 N First St
Building B
San Jose, Ca 95134

DRAINAGE QUANTITIES

DRAINAGE SHEET No.	DRAINAGE SYSTEM No.	DRAINAGE UNIT	PIPE JOINT CLASSIFICATION (N)	GRATE/COVER (N)				ROCK SLOPE PROTECTION (60 LB, CLASS II, METHOD B)	ROCK SLOPE PROTECTION FABRIC (CI 8)	MAXIMUM COVER (N)	DRAINAGE					MINOR Conc			CONCRETE (DITCH LINING)	HOT MIX ASPHALT (TYPE A)	PLACE HOT MIX ASPHALT (MISC AREA)	DESCRIPTION	STATION	DRAINAGE SHEET No.	DRAINAGE SYSTEM No.	DRAINAGE UNIT
				TYPE 24-12 (N)	TYPE 24-10C (N)	PLATE (N)	HINGED MH RIM & COVER (N)				DESIGN HEIGHT "H" (N)	SIDEWALK DRAIN (N)	GRATED LINE DRAIN	MISCELLANEOUS IRON AND STEEL	STRUCTURAL CONCRETE, DRAINAGE INLET	MISCELLANEOUS CONSTRUCTION	BACKFILL	GUTTER DEPRESSION								
				EACH				CY	SQYD	FT	LF			LB	CY	CY			CY	TON	SQYD					
D-1	3	a																		0.3	3.7	HMA OSD		D-1	3	a
		b						3.3	12.0													RSP				b
D-1	4	a																				Rem FES		D-1	4	a
		b																				Rem Culv				b
		c																				Rem INLET				c
		d																				Rem Culv				d
		e																				Rem FES				e
		f																				Rem Culv				f
		g																				Rem FES				g
D-1	5	a																				18 " AFES	89.59' Lt "M5" 72+33.49	D-1	5	a
		b	S																			18" APC				b
		c																				18" AFES	17.45' Lt "M6" 67+99.74			c
		d	S																			18" APC				d
		e		1						3.0	4.9			326	2.8			1.0				G2 DI W/ SGD	8.47' Lt "M6" 67+37.26			e
		g	S														1.8					18" APC W/ MINOR Conc BACKFILL				f
		h																				18" AFES	42.95' Rt "M6" 67+37.26			g
								2.8	10.7													RSP				h
D-1	6	a				1				1.2	3.0			174	1.6							OS DI	44.65' Lt "M1" 39+60.00	D-1	6	a
		b	S																			18" APC				b
		c																				18" AFES	87.53' Lt "M1" 39+60.25			c
		d						2.8	10.7													RSP				d
D-1	7	a		1						3.7	5.6			326	3.1			1.0				G2 DI W/ SGD	9.00' Lt "M6" 65+58.00	D-1	7	a
		b	S																			18" APC				b
		c																				18" AFES	62.35' Lt "M6" 65+58.00			c
		d						2.8	10.7													RSP				d
		e											53.8									GLD	7.75' Lt "M6" 65+02.77			e
D-1	8	a																		0.3	3.7	HMA OSD		D-1	8	a
		b						3.3	12.0													RSP				b
D-2	9	a																		0.3	3.7	HMA OSD		D-2	9	a
		b						3.3	12.0													RSP				b
				2		1		18.2	67.9				53.8	826	7.4		1.8	2.0		0.9	11.1	SUBTOTAL (DQ-4)				

APPROVED FOR DRAINAGE WORK ONLY

DRAINAGE QUANTITIES
DQ-4

RICHARD SAGASTUME	REVISED BY	RS	
STEVE LOUPE	DATE REVISED	5/3/18	
CALCULATED-DESIGNED BY			
CHECKED BY			
TIMOTHY J. LEE	CONSULTANT FUNCTIONAL SUPERVISOR		

STATE OF CALIFORNIA - DEPARTMENT OF TRANSPORTATION — Caltrans

X:\237_101_Mathilda\000_CAD\Sheets\1A-Drainage\1D-Quantities\04130002041d004.dgn

LAST REVISION | DATE PLOTTED => 9/17/2018
01-15-18 | TIME PLOTTED => 7:43:28 PM

BORDER LAST REVISED 7/2/2010 | USERNAME => rsagastume | DGN FILE => 04130002041d004.dgn | RELATIVE BORDER SCALE IS IN INCHES 0 1 2 3 | UNIT 0000 | PROJECT NUMBER & PHASE 0413000204

Dist	COUNTY	ROUTE	POST MILES TOTAL PROJECT	SHEET No.	TOTAL SHEETS
04	SCL	101,237	45.2/45.8, 2.7/3.3	133	736

REGISTERED CIVIL ENGINEER — DATE: 6-13-18

PLANS APPROVAL DATE: 6-20-18

REGISTERED PROFESSIONAL ENGINEER — STEVE LOUPE — No. 63575 — Exp. 9/30/18 — CIVIL — STATE OF CALIFORNIA

THE STATE OF CALIFORNIA OR ITS OFFICERS OR AGENTS SHALL NOT BE RESPONSIBLE FOR THE ACCURACY OR COMPLETENESS OF SCANNED COPIES OF THIS PLAN SHEET.

WMH CORPORATION
50 W San Fernando St
Suite 950
San Jose, CA 95113

VTA
3331 N First St
Building B
San Jose, Ca 95134

DRAINAGE QUANTITIES

DRAINAGE SHEET No.	DRAINAGE SYSTEM No.	DRAINAGE UNIT	REMOVE FLARED END SECTION (EA)	REMOVE INLET (EA)	CAP INLET (EA)	REMOVE CULVERT (LF)	CLEANING, INSPECTING, AND PREPARING CULVERT (LF)	ALTERNATIVE PIPE CULVERT (LF) 12"	15"	18"	24"	30"	REINFORCED CONCRETE PIPE (LF) 12" (CLASS V)	18" (CLASS III)	24" (CLASS III)	ALTERNATIVE FLARED END SECTION (EA) 12"	18"	24"	30"	DESCRIPTION	STATION	DRAINAGE SHEET No.	DRAINAGE SYSTEM No.	DRAINAGE UNIT
D-2	10	a		1																Rem INLET		D-2	10	a
		b				11.6														Rem Culv				b
		c	1																	Rem FES				c
D-2	11	a																		HMA OSD		D-2	11	a
		b																		RSP				b
D-2	12	a																		G2 Mod DI W/6" LOW FLOW ORIFICE	147.17' Lt "M1" 45+58.66	D-2	12	a
		b	1																	Rem FES				b
		c				39.0														Rem Culv				c
		d								52.5										18" APC				d
		e	1																	Rem FES				e
		f																		18" AFES	118.14' Lt "M1" 46+02.37			f
		g																		RSP				g
D-2	13	a																		GLD		D-2	13	a
		b																		G1 DI	50.16' Lt "M1" 46+00.00			b
		c								25.1										18" APC				c
		d																1		18" AFES	73.42' Lt "M1" 46+10.55			d
		e																		RSP				e
D-2	14	a																		GLD		D-2	14	a
		b																		G1 DI	50.03' Lt "M1" 47+00.00			b
		c								11.5										18" APC				c
		e																		Conc LINED DITCH				e
D-2	15	a		1																Rem INLET		D-2	15	a
		b				6.9														Rem Culv				b
		c	1																	Rem FES				c
D-2	16	a																		OS DI	51.16' Lt "M1" 48+40.00	D-2	16	a
		b								6.8										18" APC				b
		d																		Conc LINED DITCH				d
			4	2		57.5				95.9							1			SUBTOTAL (DQ-5)				

APPROVED FOR DRAINAGE WORK ONLY

DRAINAGE QUANTITIES
DQ-5

CALCULATED-DESIGNED BY	RICHARD SAGASTUME	REVISED BY	RS
CHECKED BY	STEVE LOUPE	DATE REVISED	5/3/18

CONSULTANT FUNCTIONAL SUPERVISOR: TIMOTHY J. LEE

STATE OF CALIFORNIA - DEPARTMENT OF TRANSPORTATION — Caltrans

X:\237_101_Mathilda\000_CAD\Sheets\1A-Drainage\ID-Quantities\04130002041d005.dgn

LAST REVISION | DATE PLOTTED => 9/17/2018
01-15-18 | TIME PLOTTED => 7:43:30 PM

BORDER LAST REVISED 7/2/2010 | USERNAME => rsagastume | DGN FILE => 04130002041d005.dgn | RELATIVE BORDER SCALE IS IN INCHES 0 1 2 3 | UNIT 0000 | PROJECT NUMBER & PHASE 0413000204

Dist	COUNTY	ROUTE	POST MILES TOTAL PROJECT	SHEET No.	TOTAL SHEETS
04	SCL	101,237	45.2/45.8, 2.7/3.3	134	736

REGISTERED CIVIL ENGINEER — DATE: 6-13-18

PLANS APPROVAL DATE: 6-20-18

REGISTERED PROFESSIONAL ENGINEER — STEVE LOUPE — No. 63575 — Exp. 9/30/18 — CIVIL — STATE OF CALIFORNIA

THE STATE OF CALIFORNIA OR ITS OFFICERS OR AGENTS SHALL NOT BE RESPONSIBLE FOR THE ACCURACY OR COMPLETENESS OF SCANNED COPIES OF THIS PLAN SHEET.

WMH CORPORATION
50 W San Fernando St
Suite 950
San Jose, CA 95113

VTA
3331 N First St
Building B
San Jose, Ca 95134

DRAINAGE QUANTITIES

DRAINAGE SHEET No.	DRAINAGE SYSTEM No.	DRAINAGE UNIT	PIPE JOINT CLASSIFICATION (N)	GRATE/COVER (N)				DRAINAGE					MINOR Conc			CONCRETE (DITCH LINING)	HOT MIX ASPHALT (TYPE A)	PLACE HOT MIX ASPHALT (MISC AREA)	DESCRIPTION	STATION	DRAINAGE SHEET No.	DRAINAGE SYSTEM No.	DRAINAGE UNIT
				TYPE 24-12 (N)	TYPE 24-10C (N)	PLATE (N)	HINGED MH RIM & COVER (N)	ROCK SLOPE PROTECTION (60 LB, CLASS II, METHOD B)	ROCK SLOPE PROTECTION FABRIC (CI 8)	MAXIMUM COVER (N)	DESIGN HEIGHT "H" (N)	SIDEWALK DRAIN (N)	GRATED LINE DRAIN	MISCELLANEOUS IRON AND STEEL	STRUCTURAL CONCRETE, DRAINAGE INLET	MISCELLANEOUS CONSTRUCTION	BACKFILL	GUTTER DEPRESSION							
				EACH				CY	SQYD	FT	LF			LB	CY	CY			CY	TON	SQYD					
D-2	10	a																				Rem INLET		D-2	10	a
		b																				Rem Culv				b
		c																				Rem FES				c
D-2	11	a																		0.3	3.7	HMA OSD		D-2	11	a
		b						3.3	12.0													RSP				b
D-2	12	a		1						1.7	3.6			326	2.5							G2 Mod DI W/6" LOW FLOW ORIFICE	147.17' Lt "M1" 45+58.66	D-2	12	a
		b																				Rem FES				b
		c																				Rem Culv				c
		d																				18" APC				d
		e																				Rem FES				e
		f																				18" AFES	118.14' Lt "M1" 46+02.37			f
		g						9.4	28.0													RSP				g
D-2	13	a											223.0									GLD		D-2	13	a
		b			1					5.6	7.5			202	1.9							G1 DI	50.16' Lt "M1" 46+00.00			b
		c	S																			18" APC				c
		d																				18" AFES	73.42' Lt "M1" 46+10.55			d
		e						9.4	28.0													RSP				e
D-2	14	a											95.8									GLD		D-2	14	a
		b			1					5.3	6.7			202	4.9							G1 DI	50.03' Lt "M1" 47+00.00			b
		c	S																			18" APC				c
		e																	62.0			Conc LINED DITCH				e
D-2	15	a																				Rem INLET		D-2	15	a
		b																				Rem Culv				b
		c																				Rem FES				c
D-2	16	a				1				2.4	3.8			174	1.8							OS DI	51.16' Lt "M1" 48+40.00	D-2	16	a
		b	S																			18" APC				b
		d																				Conc LINED DITCH				d
				1	2	1		22.2	68.0				318.8	904	11.1				62.0	0.3	3.7	SUBTOTAL (DQ-6)				

APPROVED FOR DRAINAGE WORK ONLY

DRAINAGE QUANTITIES
DQ-6

RICHARD SAGASTUME	REVISED BY	RS	
STEVE LOUPE	DATE REVISED	5/3/18	
CALCULATED-DESIGNED BY			
CHECKED BY			
TIMOTHY J. LEE	CONSULTANT FUNCTIONAL SUPERVISOR		

STATE OF CALIFORNIA - DEPARTMENT OF TRANSPORTATION — Caltrans

X:\237_101_Mathilda\000_CAD\Sheets\1A-Drainage\ID-Quantities\0413000204id006.dgn

LAST REVISION 01-15-18 | DATE PLOTTED => 9/17/2018 | TIME PLOTTED => 7:43:31 PM

BORDER LAST REVISED 7/2/2010 | USERNAME => rsagastume | DGN FILE => 0413000204id006.dgn | RELATIVE BORDER SCALE IS IN INCHES 0 1 2 3 | UNIT 0000 | PROJECT NUMBER & PHASE 0413000204

Dist	COUNTY	ROUTE	POST MILES TOTAL PROJECT	SHEET No.	TOTAL SHEETS
04	SCL	101,237	45.2/45.8, 2.7/3.3	135	736

6-13-18
REGISTERED CIVIL ENGINEER DATE

6-20-18
PLANS APPROVAL DATE

REGISTERED PROFESSIONAL ENGINEER
STEVE LOUPE
No. 63575
Exp. 9/30/18
CIVIL
STATE OF CALIFORNIA

THE STATE OF CALIFORNIA OR ITS OFFICERS OR AGENTS SHALL NOT BE RESPONSIBLE FOR THE ACCURACY OR COMPLETENESS OF SCANNED COPIES OF THIS PLAN SHEET.

WMH CORPORATION
50 W San Fernando St
Suite 950
San Jose, CA 95113

VTA
3331 N First St
Building B
San Jose, Ca 95134

DRAINAGE QUANTITIES

DRAINAGE SHEET No.	DRAINAGE SYSTEM No.	DRAINAGE UNIT	REMOVE FLARED END SECTION (EA)	REMOVE INLET (EA)	CAP INLET (EA)	REMOVE CULVERT (LF)	CLEANING, INSPECTING, AND PREPARING CULVERT (LF)	ALTERNATIVE PIPE CULVERT 12" (LF)	ALTERNATIVE PIPE CULVERT 15" (LF)	ALTERNATIVE PIPE CULVERT 18" (LF)	ALTERNATIVE PIPE CULVERT 24" (LF)	ALTERNATIVE PIPE CULVERT 30" (LF)	REINFORCED CONCRETE PIPE 12" (CLASS V) (LF)	REINFORCED CONCRETE PIPE 18" (CLASS III) (LF)	REINFORCED CONCRETE PIPE 24" (CLASS III) (LF)	ALTERNATIVE FLARED END SECTION 12" (EA)	ALTERNATIVE FLARED END SECTION 18" (EA)	ALTERNATIVE FLARED END SECTION 24" (EA)	ALTERNATIVE FLARED END SECTION 30" (EA)	DESCRIPTION	STATION	DRAINAGE SHEET No.	DRAINAGE SYSTEM No.	DRAINAGE UNIT
D-2	17	a																		OS DI	51.65' Lt "M1" 50+00.61	D-2	17	a
		b								5.3										18" APC				b
		d																		Conc LINED DITCH				d
D-2	18	a																		OS DI	49.27' Rt "M1" 44+80.00	D-2	18	a
		b								40.7										18" APC				b
		c															1			18" AFES	93.42' Rt "M1" 44+78.25			c
		d																		RSP				d
D-2	19	a																		HMA OSD		D-2	19	a
		b																		RSP				b
D-2	20	a															1			18" AFES	18.35' Rt "M3" 75+75.29	D-2	20	a
		b								86.6										18" APC				b
		c																		G2 DI W/ SGD	6.21' Rt "M3" 74+88.00			c
		d								182.3										18" APC				d
		e															1			18" AFES	76.81' Rt "M3" 73+45.20			e
		f																		RSP				f
		e																		GLD	2.68' Rt 74+60.81			e
D-2	21	a															1			18" AFES	76.00' Lt "M2" 69+07.57	D-2	21	a
		b	1																	Rem Fes				b
		c								82.4										18" APC				c
		d				10.6														Rem Culv				d
		e		1																Rem INLET				e
		f				47.7														Rem Culv				f
		g																		G2 DI W/ SGD	7.0' Rt "M2" 68+94.00			g
		h	1																	Rem Fes				h
		i								66.4										18" APC				i
		j																		G2 DI W/ SGD	55.47' Lt "M3" 72+87.00			j
		k								24.3										18" APC				k
		l															1			18" AFES	87.38' "M3" 72+81.85			l
		m																		RSP				m
		n																		GLD	55.6 Lt "M3" 72+34.30			n
		o																		GLD	5.75' Lt "M2" 68+22.56			o
D-2	22	a																		OS DI	53.13' Rt "M1" 47+05.89	D-2	22	a
		b								21.3										18" APC				b
		c															1			18" AFES	62.87' "M1" 47+10.93			c
		d																		RSP				d
			2	1		58.3				509.3							6			SUBTOTAL (DQ-7)				

APPROVED FOR DRAINAGE WORK ONLY

DRAINAGE QUANTITIES
DQ-7

RICHARD SAGASTUME	RS	CALCULATED-DESIGNED BY			
STEVE LOUPE	5/3/18	CHECKED BY			
TIMOTHY J. LEE		CONSULTANT FUNCTIONAL SUPERVISOR			
STATE OF CALIFORNIA - DEPARTMENT OF TRANSPORTATION					

LAST REVISION 01-15-18
DATE PLOTTED => 9/17/2018
TIME PLOTTED => 7:43:33 PM

X:\237_101_Mathilda\000_CAD\Sheets\1A-Drainage\1D-Quantities\04130002041d007.dgn

BORDER LAST REVISED 7/2/2010 | USERNAME => rsagastume | DGN FILE => 04130002041d007.dgn | RELATIVE BORDER SCALE IS IN INCHES 0 1 2 3 | UNIT 0000 | PROJECT NUMBER & PHASE 0413000204

Dist	COUNTY	ROUTE	POST MILES TOTAL PROJECT	SHEET No.	TOTAL SHEETS
04	SCL	101,237	45.2/45.8, 2.7/3.3	136	736

REGISTERED CIVIL ENGINEER — DATE: 6-13-18

6-20-18
PLANS APPROVAL DATE

REGISTERED PROFESSIONAL ENGINEER — STEVE LOUPE — No. 63575 — Exp. 9/30/18 — CIVIL — STATE OF CALIFORNIA

THE STATE OF CALIFORNIA OR ITS OFFICERS OR AGENTS SHALL NOT BE RESPONSIBLE FOR THE ACCURACY OR COMPLETENESS OF SCANNED COPIES OF THIS PLAN SHEET.

WMH CORPORATION
50 W San Fernando St
Suite 950
San Jose, CA 95113

VTA
3331 N First St
Building B
San Jose, Ca 95134

DRAINAGE QUANTITIES

DRAINAGE SHEET No.	DRAINAGE SYSTEM No.	DRAINAGE UNIT	PIPE JOINT CLASSIFICATION (N)	GRATE/COVER (N)				ROCK SLOPE PROTECTION (60 LB, CLASS II, METHOD B)	ROCK SLOPE PROTECTION FABRIC (CI 8)	MAXIMUM COVER (N)	DRAINAGE					MINOR Conc			CONCRETE (DITCH LINING)	HOT MIX ASPHALT (TYPE A)	PLACE HOT MIX ASPHALT (MISC AREA)	DESCRIPTION	STATION	DRAINAGE SHEET No.	DRAINAGE SYSTEM No.	DRAINAGE UNIT
				TYPE 24-12 (N)	TYPE 24-10C (N)	PLATE (N)	HINGED MH RIM & COVER (N)				DESIGN HEIGHT "H" (N)	SIDEWALK DRAIN (N)	GRATED LINE DRAIN	MISCELLANEOUS IRON AND STEEL	STRUCTURAL CONCRETE, DRAINAGE INLET	MISCELLANEOUS CONSTRUCTION	BACKFILL	GUTTER DEPRESSION								
				EACH				CY	SQYD	FT	LF			LB	CY	CY			CY	TON	SQYD					
D-2	17	a				1				1.3	2.7			174	1.5							OS DI	51.65' L+ "M1" 50+00.61	D-2	17	a
		b	S																			18" APC				b
		d																				Conc LINED DITCH				d
D-2	18	a				1				1.8	3.7			174	1.7							OS DI	49.27' R+ "M1" 44+80.00	D-2	18	a
		b	S																			18" APC				b
		c																				18" AFES	93.42' R+ "M1" 44+78.25			c
		d						2.8	10.7													RSP				d
D-2	19	a																		0.3	3.7	HMA OSD		D-2	19	a
		b						3.3	12.0													RSP				b
D-2	20	a																				18" AFES	18.35' R+ "M3" 75+75.29	D-2	20	a
		b	S																			18" APC				b
		c		1						1.9	4.4			326	2.6			1.0				G2 DI W/ SGD	6.21' R+ "M3" 74+88.00			c
		d	S																			18" APC				d
		e																				18" AFES	76.81' R+ "M3" 73+45.20			e
		f						9.4	28.0													RSP				f
		e											25.0									GLD	2.68' R+ 74+60.81			e
D-2	21	a																				18" AFES	76.00' L+ "M2" 69+07.57	D-2	21	a
		b																				Rem Fes				b
		c	S																			18" APC				c
		d																				Rem Culv				d
		e																				Rem INLET				e
		f																				Rem Culv				f
		g		1						7.8	9.7			326	4.8			1.0				G2 DI W/ SGD	7.0' R+ "M2" 68+94.00			g
		h	S																			Rem Fes				h
		i																				18" APC				i
		j		1						7.0	8.9			326	4.4			1.0				G2 DI W/ SGD	55.47' L+ "M3" 72+87.00			j
		k	S																			18" APC				k
		l																				18" AFES	87.38' "M3" 72+81.85			l
		m						9.4	28.0													RSP				m
		n											50.5									GLD	55.6 L+ "M3" 72+34.30			n
		o											68.5									GLD	5.75' L+ "M2" 68+22.56			o
D-2	22	a				1				4.4	6.3			174	2.4							OS DI	53.13' R+ "M1" 47+05.89	D-2	22	a
		b	S																			18" APC				b
		c																				18" AFES	62.87' "M1" 47+10.93			c
		d						9.4	28.0													RSP				d
				3		3		34.3	106.7				144.0	1500	17.4			3.0		0.3	3.7	SUBTOTAL (DQ-8)				

APPROVED FOR DRAINAGE WORK ONLY

DRAINAGE QUANTITIES
DQ-8

RICHARD SAGASTUME	REVISED BY	RS	
STEVE LOUPE	DATE REVISED	5/3/18	
CALCULATED-DESIGNED BY			
CHECKED BY			
TIMOTHY J. LEE	CONSULTANT FUNCTIONAL SUPERVISOR		
STATE OF CALIFORNIA - DEPARTMENT OF TRANSPORTATION			

X:\237_101_Mathilda\000_CAD\Sheets\1A-Drainage\ID-Quantities\0413000204id008.dgn

LAST REVISION => 01-15-18 | DATE PLOTTED => 9/17/2018 | TIME PLOTTED => 7:43:34 PM

BORDER LAST REVISED 7/2/2010 | USERNAME => rsagastume | DGN FILE => 0413000204id008.dgn | RELATIVE BORDER SCALE IS IN INCHES 0 1 2 3 | UNIT 0000 | PROJECT NUMBER & PHASE 0413000204

Dist	COUNTY	ROUTE	POST MILES TOTAL PROJECT	SHEET No.	TOTAL SHEETS
04	SCL	101,237	45.2/45.8, 2.7/3.3	137	736

REGISTERED CIVIL ENGINEER — DATE: 6-13-18

6-20-18
PLANS APPROVAL DATE

REGISTERED PROFESSIONAL ENGINEER — STEVE LOUPE — No. 63575 — Exp. 9/30/18 — CIVIL — STATE OF CALIFORNIA

THE STATE OF CALIFORNIA OR ITS OFFICERS OR AGENTS SHALL NOT BE RESPONSIBLE FOR THE ACCURACY OR COMPLETENESS OF SCANNED COPIES OF THIS PLAN SHEET.

WMH CORPORATION
50 W San Fernando St
Suite 950
San Jose, CA 95113

VTA
3331 N First St
Building B
San Jose, Ca 95134

DRAINAGE QUANTITIES

DRAINAGE SHEET No.	DRAINAGE SYSTEM No.	DRAINAGE UNIT	REMOVE FLARED END SECTION (EA)	REMOVE INLET (EA)	CAP INLET (EA)	REMOVE CULVERT (LF)	CLEANING, INSPECTING, AND PREPARING CULVERT (LF)	ALTERNATIVE PIPE CULVERT 12" (LF)	ALTERNATIVE PIPE CULVERT 15" (LF)	ALTERNATIVE PIPE CULVERT 18" (LF)	ALTERNATIVE PIPE CULVERT 24" (LF)	ALTERNATIVE PIPE CULVERT 30" (LF)	REINFORCED CONCRETE PIPE 12" (CLASS V) (LF)	REINFORCED CONCRETE PIPE 18" (CLASS III) (LF)	REINFORCED CONCRETE PIPE 24" (CLASS III) (LF)	ALTERNATIVE FLARED END SECTION 12" (EA)	ALTERNATIVE FLARED END SECTION 18" (EA)	ALTERNATIVE FLARED END SECTION 24" (EA)	ALTERNATIVE FLARED END SECTION 30" (EA)	DESCRIPTION	STATION	DRAINAGE SHEET No.	DRAINAGE SYSTEM No.	DRAINAGE UNIT
D-2	23	a	1																	Rem FES		D-2	23	a
		b				33.4														Rem Culv				b
		c	1																	Rem FES				c
D-2	24	a																		OS DI	62.87' R+ "M1" 48+16.00	D-2	24	a
		b						22.0												12" APC				b
		c														1				12" AFES	88.39' R+ "M1" 48+15.52			c
		d																		RSP				d
D-2	25	a																		12" SW DRAIN	81.36' R+ "M1" 50+83.53	D-2	25	a
		b																		RSP				b
D-3	26	a																		12" SW DRAIN	87.22' R+ "M1" 52+00.00	D-3	26	a
		b																		RSP				b
D-3	27	a																		G1 Mod W/ DA (CASE 1) DI	106.54 R+ "M1" 52+28.18	D-3	27	a
		b								67.8										18" APC				b
		c																		CITY GO DI (W/ PIPE SCREEN INSERT)	11.72' R+ "M1" 52+98.14			c
		d									80.8									24" APC				d
		e	1																	Rem FES				e
		f				10.2														Rem Culv				f
		g		1																Rem INLET				g
		h				69.8														Rem Culv				h
		i		1																Rem INLET				i
		j																		CITY GO DI (W/ PIPE SCREEN INSERT)	113.2' R+ "M1" 53+82.75			j
		k				8.7														Rem Culv				k
		l	1																	Rem FES				l
		m									42.8									24" APC				m
		n																		OS DI	22.00' R+ "D5" 05+89.29			n
		o								10.2										18" APC				o
		p																		MH CITY TYPE 1	37.73' R+ "D5" 05+89.38			p
		q										40.4								30" APC				q
		r																	1	30" AFES	40.06' R+ "D5" 06+31.59			r
		s																		RSP				s
			4	2		122.0		22.0		78.1	123.5	40.4				1			1	SUBTOTAL (DQ-9)				

APPROVED FOR DRAINAGE WORK ONLY

DRAINAGE QUANTITIES
DQ-9

REVISED BY	DATE REVISED
RS	5/3/18

CALCULATED-DESIGNED BY: RICHARD SAGASTUME
CHECKED BY: STEVE LOUPE
CONSULTANT FUNCTIONAL SUPERVISOR: TIMOTHY J. LEE
STATE OF CALIFORNIA - DEPARTMENT OF TRANSPORTATION

LAST REVISION 01-15-18 | DATE PLOTTED => 9/17/2018 | TIME PLOTTED => 7:43:36 PM

X:\237_101_Mathilda\000_CAD\Sheets\1A-Drainage\1D-Quantities\04130002041d009.dgn

BORDER LAST REVISED 7/2/2010 | USERNAME => rsagastume | DGN FILE => 04130002041d009.dgn | RELATIVE BORDER SCALE IS IN INCHES 0 1 2 3 | UNIT 0000 | PROJECT NUMBER & PHASE 0413000204

Dist	COUNTY	ROUTE	POST MILES TOTAL PROJECT	SHEET No.	TOTAL SHEETS
04	SCL	101,237	45.2/45.8, 2.7/3.3	138	736

REGISTERED CIVIL ENGINEER — DATE: 6-13-18

6-20-18
PLANS APPROVAL DATE

REGISTERED PROFESSIONAL ENGINEER — STEVE LOUPE — No. 63575 — Exp. 9/30/18 — CIVIL — STATE OF CALIFORNIA

THE STATE OF CALIFORNIA OR ITS OFFICERS OR AGENTS SHALL NOT BE RESPONSIBLE FOR THE ACCURACY OR COMPLETENESS OF SCANNED COPIES OF THIS PLAN SHEET.

WMH CORPORATION
50 W San Fernando St
Suite 950
San Jose, CA 95113

VTA
3331 N First St
Building B
San Jose, Ca 95134

DRAINAGE QUANTITIES

DRAINAGE SHEET No.	DRAINAGE SYSTEM No.	DRAINAGE UNIT	PIPE JOINT CLASSIFICATION (N)	GRATE/COVER (N)				ROCK SLOPE PROTECTION (60 LB, CLASS II, METHOD B)	ROCK SLOPE PROTECTION FABRIC (CI 8)	MAXIMUM COVER (N)	DRAINAGE					MINOR Conc			CONCRETE (DITCH LINING)	HOT MIX ASPHALT (TYPE A)	PLACE HOT MIX ASPHALT (MISC AREA)	DESCRIPTION	STATION	DRAINAGE SHEET No.	DRAINAGE SYSTEM No.	DRAINAGE UNIT
				TYPE 24-12 (N)	TYPE 24-10C (N)	PLATE (N)	HINGED MH RIM & COVER (N)				DESIGN HEIGHT "H" (N)	SIDEWALK DRAIN (N)	GRATED LINE DRAIN	MISCELLANEOUS IRON AND STEEL	STRUCTURAL CONCRETE, DRAINAGE INLET	MISCELLANEOUS CONSTRUCTION	BACKFILL	GUTTER DEPRESSION								
				EACH				CY	SQYD	FT	LF			LB	CY	CY			CY	TON	SQYD					
D-2	23	a																				Rem FES		D-2	23	a
		b																				Rem Culv				b
		c																				Rem FES				c
D-2	24	a				1				1.4	3.3			174	1.6							OS DI	62.87' Rt "M1" 48+16.00	D-2	24	a
		b	S																			12" APC				b
		c																				12" AFES	88.39' Rt "M1" 48+15.52			c
		d						9.4	28.0													RSP				d
D-2	25	a										9.5				0.4						12" SW DRAIN	81.36' Rt "M1" 50+83.53	D-2	25	a
		b						3.3	10.6													RSP				b
D-3	26	a										9.5				0.4						12" SW DRAIN	87.22' Rt "M1" 52+00.00	D-3	26	a
		b						3.3	10.6													RSP				b
D-3	27	a		1						0.8	2.7			326	1.0	0.3						G1 Mod W/ DA (CASE 1) DI	106.54 Rt "M1" 52+28.18	D-3	27	a
		b	S																			18" APC				b
		c			1					2.4	4.3			202	1.6							CITY GO DI (W/ PIPE SCREEN INSERT)	11.72' Rt "M1" 52+98.14			c
		d	S																			24" APC				d
		e																				Rem FES				e
		f																				Rem Culv				f
		g																				Rem INLET				g
		h																				Rem Culv				h
		i																				Rem INLET				i
		j			1					2.5	4.4			202	1.6							CITY GO DI (W/ PIPE SCREEN INSERT)	113.2' Rt "M1" 53+82.75			j
		k																				Rem Culv				k
		l																				Rem FES				l
		m	S																			24" APC				m
		n				1				2.2	4.1			174	1.8							OS DI	22.00' Rt "D5" 05+89.29			n
		o	S																			18" APC				o
		p					1			2.4	4.3			195	1.2							MH CITY TYPE 1	37.73' Rt "D5" 05+89.38			p
		q	S																			30" APC				q
		r																				30" AFES	40.06' Rt "D5" 06+31.59			r
		s						9.4	28.1													RSP				s
				1	2	2	1	25.4	77.3			19.0		1273	8.8	1.1						SUBTOTAL (DQ-10)				

APPROVED FOR DRAINAGE WORK ONLY

DRAINAGE QUANTITIES
DQ-10

RICHARD SAGASTUME				
STEVE LOUPE				
CALCULATED-DESIGNED BY				
CHECKED BY				
TIMOTHY J. LEE				
DEPARTMENT OF TRANSPORTATION				
STATE OF CALIFORNIA -				
Caltrans				
SUPERVISOR				
CONSULTANT FUNCTIONAL				
REVISED BY	RS			
DATE REVISED	5/3/18			

X:\237_101_Mathilda\000_CAD\Sheets\1A-Drainage\ID-Quantities\0413000204id010.dgn

LAST REVISION => 01-15-18
DATE PLOTTED => 9/17/2018
TIME PLOTTED => 7:43:38 PM

BORDER LAST REVISED 7/2/2010 | USERNAME => rsagastume | DGN FILE => 0413000204id010.dgn | RELATIVE BORDER SCALE IS IN INCHES 0 1 2 3 | UNIT 0000 | PROJECT NUMBER & PHASE 0413000204

Dist	COUNTY	ROUTE	POST MILES TOTAL PROJECT	SHEET No.	TOTAL SHEETS
04	SCL	101,237	45.2/45.8, 2.7/3.3	139	736

REGISTERED CIVIL ENGINEER — DATE: 6-13-18

6-20-18
PLANS APPROVAL DATE

REGISTERED PROFESSIONAL ENGINEER — STEVE LOUPE — No. 63575 — Exp. 9/30/18 — CIVIL — STATE OF CALIFORNIA

THE STATE OF CALIFORNIA OR ITS OFFICERS OR AGENTS SHALL NOT BE RESPONSIBLE FOR THE ACCURACY OR COMPLETENESS OF SCANNED COPIES OF THIS PLAN SHEET.

WMH CORPORATION
50 W San Fernando St
Suite 950
San Jose, CA 95113

VTA
3331 N First St
Building B
San Jose, Ca 95134

DRAINAGE QUANTITIES

DRAINAGE SHEET No.	DRAINAGE SYSTEM No.	DRAINAGE UNIT	REMOVE FLARED END SECTION (EA)	REMOVE INLET (EA)	CAP INLET (EA)	REMOVE CULVERT (LF)	CLEANING, INSPECTING, AND PREPARING CULVERT (LF)	ALTERNATIVE PIPE CULVERT (LF) 12"	15"	18"	24"	30"	REINFORCED CONCRETE PIPE (LF) 12" (CLASS V)	18" (CLASS III)	24" (CLASS III)	ALTERNATIVE FLARED END SECTION (EA) 12"	18"	24"	30"	DESCRIPTION	STATION	DRAINAGE SHEET No.	DRAINAGE SYSTEM No.	DRAINAGE UNIT
D-3	28	a																1		24" AFES	41.00' Rt "D5" 08+75.43	D-3	28	a
		b	1																	Rem FES				b
		c				63.4														Rem Culv				c
		d									69.7									24" APC				d
		e																		G1 Mod W/ DA (CASE 2) DI	34.23' Rt "D5" 08+75.43			e
		f																15.8		24" RCPW/ MINOR Conc BACKFILL & Conc COLLAR				f
		g		1																Rem INLET				g
		h					84.0													CLEANING, INSPECTING, AND PREPARING Culv				h
D-3	29	a																		OS DI	67.54' Rt "M1" 56+65.00	D-3	29	a
		b								47.4										18" APC W/ PIPE CONNECTION				b
D-3	30	a															1			18" AFES	90.79' Rt "M1" 59+61.79	D-3	30	a
		b								27.6										18" APC				b
		c																		OS DI	66.34' Rt "M1" 59+42.62			c
		d												4.6						18" RCP W/ Conc COLLAR				d
		e		1																Rem INLET				e
D-3	31	a																		HMA OSD		D-3	31	a
		b																		RSP				b
D-3	32	a																		G3 DI	66.43' Rt "M1" 60+91.40	D-3	32	a
		b								23.7										18" APC				b
		c															1			18" AFES	90.18' Rt "M1" 60+91.42			c
		d																		RSP				d
D-3	33	a		1																Rem INLET		D-3	33	a
		b																		OS DI	42.50' Lt "L6" 160+81.62			b
		c											3.0							12" RCP W/ CONC COLLAR				c
		d				1.8														Rem Culv				d
			1	3		65.2	84.0			98.7	69.7		3.0	4.6	15.8		2	1		SUBTOTAL (DQ-11)				

APPROVED FOR DRAINAGE WORK ONLY

DRAINAGE QUANTITIES
DQ-11

CALCULATED-DESIGNED BY	RICHARD SAGASTUME	REVISED BY	RS	LAST REVISION	DATE PLOTTED => 9/17/2018
CHECKED BY	STEVE LOUPE	DATE REVISED	5/3/18	01-15-18	TIME PLOTTED => 7:43:39 PM

CONSULTANT FUNCTIONAL SUPERVISOR: TIMOTHY J. LEE

STATE OF CALIFORNIA - DEPARTMENT OF TRANSPORTATION — Caltrans

X:\237_101_Mathilda\000_CAD\Sheets\1A-Drainage\1D-Quantities\0413000204id011.dgn

BORDER LAST REVISED 7/2/2010 | USERNAME => rsagastume | DGN FILE => 0413000204id011.dgn | RELATIVE BORDER SCALE IS IN INCHES 0 1 2 3 | UNIT 0000 | PROJECT NUMBER & PHASE 0413000204

Dist	COUNTY	ROUTE	POST MILES TOTAL PROJECT	SHEET No.	TOTAL SHEETS
04	SCL	101,237	45.2/45.8, 2.7/3.3	140	736

6-13-18
REGISTERED CIVIL ENGINEER DATE

6-20-18
PLANS APPROVAL DATE

REGISTERED PROFESSIONAL ENGINEER
STEVE LOUPE
No. 63575
Exp. 9/30/18
CIVIL
STATE OF CALIFORNIA

THE STATE OF CALIFORNIA OR ITS OFFICERS OR AGENTS SHALL NOT BE RESPONSIBLE FOR THE ACCURACY OR COMPLETENESS OF SCANNED COPIES OF THIS PLAN SHEET.

WMH CORPORATION
50 W San Fernando St
Suite 950
San Jose, CA 95113

VTA
3331 N First St
Building B
San Jose, Ca 95134

DRAINAGE QUANTITIES

DRAINAGE SHEET No.	DRAINAGE SYSTEM No.	DRAINAGE UNIT	PIPE JOINT CLASSIFICATION (N)	GRATE/COVER (N)				ROCK SLOPE PROTECTION (60 LB, CLASS II, METHOD B)	ROCK SLOPE PROTECTION FABRIC (CI 8)	MAXIMUM COVER (N)	DRAINAGE						MINOR Conc			CONCRETE (DITCH LINING)	HOT MIX ASPHALT (TYPE A)	PLACE HOT MIX ASPHALT (MISC AREA)	DESCRIPTION	STATION	DRAINAGE SHEET No.	DRAINAGE SYSTEM No.	DRAINAGE UNIT
				TYPE 24-12 (N)	TYPE 24-10C (N)	PLATE (N)	HINGED MH RIM & COVER (N)				DESIGN HEIGHT "H" (N)	SIDEWALK DRAIN (N)	GRATED LINE DRAIN	MISCELLANEOUS IRON AND STEEL	STRUCTURAL CONCRETE, DRAINAGE INLET	MISCELLANEOUS CONSTRUCTION	BACKFILL	GUTTER DEPRESSION								
				EACH				CY	SQYD	FT	LF			LB	CY	CY			CY	TON	SQYD					
D-3	28	a																				24" AFES	41.00' R+ "D5" 08+75.43	D-3	28	a
		b																				Rem FES				b
		c																				Rem Culv				c
		d	S																			24" APC				d
		e		1						0.4	2.8			326	1.0	0.3						G1 Mod W/ DA (CASE 2) DI	34.23' R+ "D5" 08+75.43			e
		f	S													0.3	4.8					24" RCPW/ MINOR Conc BACKFILL & Conc COLLAR				f
		g																				Rem INLET				g
		h																				CLEANING, INSPECTING, AND PREPARING Culv				h
D-3	29	a				1				3.0	4.9			174	2.1							OS DI	67.54' R+ "M1" 56+65.00	D-3	29	a
		b	S													0.1						18" APC W/ PIPE CONNECTION				b
D-3	30	a																				18" AFES	90.79' R+ "M1" 59+61.79	D-3	30	a
		b	S																			18" APC				b
		c				1				2.9	3.8			174	1.8							OS DI	66.34' R+ "M1" 59+42.62			c
		d	S													0.2						18" RCP W/ Conc COLLAR				d
		e																				Rem INLET				e
D-3	31	a																		0.3	3.7	HMA OSD		D-3	31	a
		b						3.3	12.0													RSP				b
D-3	32	a			1					0.2	1.9			202	1.0							G3 DI	66.43' R+ "M1" 60+91.40	D-3	32	a
		b	S																			18" APC				b
		c																				18" AFES	90.18' R+ "M1" 60+91.42			c
		d						9.4	28.0													RSP				d
D-3	33	a																				Rem INLET		D-3	33	a
		b				1				1.3	3.2			174	1.6							OS DI	42.50' L+ "L6" 160+81.62			b
		c	S													0.2						12" RCP W/ CONC COLLAR				c
		d																				Rem Culv				d
				1	1	3		12.7	40.0					1050	7.4	1.1	4.8			0.3	3.7	SUBTOTAL (DQ-12)				

APPROVED FOR DRAINAGE WORK ONLY

DRAINAGE QUANTITIES
DQ-12

RICHARD SAGASTUME — REVISED BY: RS
STEVE LOUPE — DATE REVISED: 5/3/18
CALCULATED-DESIGNED BY
CHECKED BY
TIMOTHY J. LEE — CONSULTANT FUNCTIONAL SUPERVISOR
STATE OF CALIFORNIA - DEPARTMENT OF TRANSPORTATION
Caltrans

X:\237_101_Mathilda\000_CAD\Sheets\1A-Drainage\1D-Quantities\04130002041d012.dgn

LAST REVISION 01-15-18
DATE PLOTTED => 9/17/2018
TIME PLOTTED => 7:43:41 PM

BORDER LAST REVISED 7/2/2010
USERNAME => rsagastume
DGN FILE => 04130002041d012.dgn
RELATIVE BORDER SCALE IS IN INCHES 0 1 2 3
UNIT 0000
PROJECT NUMBER & PHASE 0413000204

Dist	COUNTY	ROUTE	POST MILES TOTAL PROJECT	SHEET No.	TOTAL SHEETS
04	SCL	101,237	45.2/45.8, 2.7/3.3	141	736

6-13-18
REGISTERED CIVIL ENGINEER DATE

6-20-18
PLANS APPROVAL DATE

REGISTERED PROFESSIONAL ENGINEER
STEVE LOUPE
No. 63575
Exp. 9/30/18
CIVIL
STATE OF CALIFORNIA

THE STATE OF CALIFORNIA OR ITS OFFICERS OR AGENTS SHALL NOT BE RESPONSIBLE FOR THE ACCURACY OR COMPLETENESS OF SCANNED COPIES OF THIS PLAN SHEET.

WMH CORPORATION
50 W San Fernando St
Suite 950
San Jose, CA 95113

VTA
3331 N First St
Building B
San Jose, Ca 95134

DRAINAGE QUANTITIES

DRAINAGE SHEET No.	DRAINAGE SYSTEM No.	DRAINAGE UNIT	REMOVE FLARED END SECTION (EA)	REMOVE INLET (EA)	CAP INLET (EA)	REMOVE CULVERT (LF)	CLEANING, INSPECTING, AND PREPARING CULVERT (LF)	ALTERNATIVE PIPE CULVERT (LF) 12"	15"	18"	24"	30"	REINFORCED CONCRETE PIPE (LF) 12" (CLASS V)	18" (CLASS III)	24" (CLASS III)	ALTERNATIVE FLARED END SECTION (EA) 12"	18"	24"	30"	DESCRIPTION	STATION	DRAINAGE SHEET No.	DRAINAGE SYSTEM No.	DRAINAGE UNIT
D-3	34	a		1																Rem INLET		D-3	34	a
		b				4.6														Rem Culv				b
		c																		CITY GO DI (W/ PIPE SCREEN INSERT)	37.82' Lt "M1" 64+50.43			c
		d											3.0							12" RCP w/ Conc COLLAR				d
D-4	35	a		1																Rem INLET		D-4	35	a
		b				4.6														Rem Culv				b
		c																		CITY GO DI (W/ PIPE SCREEN INSERT)	40.62' Lt "M1" 68+98.62			c
		d											3.0							12" RCP W/ Conc COLLAR				d
D-4	36	a		1																Rem INLET		D-4	36	a
		b				2.5														Rem Culv				b
		c																		CITY GO DI (W/ PIPE SCREEN INSERT)	37.89' Lt "M1" 70+62.69			c
		d											6.1							12" RCP W/ Conc COLLAR				d
D-5	37	a																		G1 Mod (CASE 3) DI	54.38' Lt "M3" 76+52.84	D-5	37	a
		b							6.0											15" APC W/ MINOR Conc BACKFILL				b
		c																		G1 Mod (CASE 3) DI	52.83' Lt "M3" 77+73.59			c
		d							6.0											15" APC W/ MINOR Conc BACKFILL				d
		e																		G1 Mod (CASE 3) DI	53.73' Lt "M3" 76+63.24			e
		f							23.0											15" APC				f
		g																		MH CITY TYPE 1	75.95' Lt "M3" 76+94.81			g
		h							88.0											15" APC W/ PIPE CONNECTION				h
				3		12			123				12							SUBTOTAL (DQ-13)				

APPROVED FOR DRAINAGE WORK ONLY

DRAINAGE QUANTITIES
DQ-13

REVISED BY	RS			
DATE REVISED	5/3/18			
RICHARD SAGASTUME	STEVE LOUPE	TIMOTHY J. LEE		
CALCULATED-DESIGNED BY	CHECKED BY	CONSULTANT FUNCTIONAL SUPERVISOR		

STATE OF CALIFORNIA - DEPARTMENT OF TRANSPORTATION

X:\237_101_Mathilda\000_CAD\Sheets\1A-Drainage\1D-Quantities\04130002041d013.dgn

LAST REVISION 01-15-18
DATE PLOTTED => 9/17/2018
TIME PLOTTED => 7:43:42 PM

BORDER LAST REVISED 7/2/2010
USERNAME => rsagastume
DGN FILE => 04130002041d013.dgn
RELATIVE BORDER SCALE IS IN INCHES 0 1 2 3
UNIT 0000
PROJECT NUMBER & PHASE 0413000204

Dist	COUNTY	ROUTE	POST MILES TOTAL PROJECT	SHEET No.	TOTAL SHEETS
04	SCL	101,237	45.2/45.8, 2.7/3.3	142	736

REGISTERED CIVIL ENGINEER — DATE: 6-13-18

6-20-18
PLANS APPROVAL DATE

REGISTERED PROFESSIONAL ENGINEER — STEVE LOUPE — No. 63575 — Exp. 9/30/18 — CIVIL — STATE OF CALIFORNIA

THE STATE OF CALIFORNIA OR ITS OFFICERS OR AGENTS SHALL NOT BE RESPONSIBLE FOR THE ACCURACY OR COMPLETENESS OF SCANNED COPIES OF THIS PLAN SHEET.

WMH CORPORATION
50 W San Fernando St
Suite 950
San Jose, CA 95113

VTA
3331 N First St
Building B
San Jose, Ca 95134

DRAINAGE QUANTITIES

DRAINAGE SHEET No.	DRAINAGE SYSTEM No.	DRAINAGE UNIT	PIPE JOINT CLASSIFICATION (N)	GRATE/COVER (N)				ROCK SLOPE PROTECTION (60 LB, CLASS II, METHOD B)	ROCK SLOPE PROTECTION FABRIC (CI 8)	MAXIMUM COVER (N)	DRAINAGE					MINOR Conc			CONCRETE (DITCH LINING)	HOT MIX ASPHALT (TYPE A)	PLACE HOT MIX ASPHALT (MISC AREA)	DESCRIPTION	STATION	DRAINAGE SHEET No.	DRAINAGE SYSTEM No.	DRAINAGE UNIT
				TYPE 24-12 (N)	TYPE 24-10C (N)	PLATE (N)	HINGED MH RIM & COVER (N)				DESIGN HEIGHT "H" (N)	SIDEWALK DRAIN (N)	GRATED LINE DRAIN	MISCELLANEOUS IRON AND STEEL	STRUCTURAL CONCRETE, DRAINAGE INLET	MISCELLANEOUS CONSTRUCTION	BACKFILL	GUTTER DEPRESSION								
				EACH				CY	SQYD	FT	LF			LB	CY	CY			CY	TON	SQYD					
D-3	34	a																				Rem INLET		D-3	34	a
		b																				Rem Culv				b
		c			1					1.6	3.5			202	1.4							CITY GO DI (W/ PIPE SCREEN INSERT)	37.82' Lt "M1" 64+50.43			c
		d	S													0.2						12" RCP w/ Conc COLLAR				d
D-4	35	a																				Rem INLET		D-4	35	a
		b																				Rem Culv				b
		c			1					1.0	3.0			202	1.3							CITY GO DI (W/ PIPE SCREEN INSERT)	40.62' Lt "M1" 68+98.62			c
		d	S													0.2						12" RCP W/ Conc COLLAR				d
D-4	36	a																				Rem INLET		D-4	36	a
		b																				Rem Culv				b
		c			1					2.5	4.4			202	1.6							CITY GO DI (W/ PIPE SCREEN INSERT)	37.89' Lt "M1" 70+62.69			c
		d														0.2						12" RCP W/ Conc COLLAR				d
D-5	37	a		1						0.4	2.0			326	1.0							G1 Mod (CASE 3) DI	54.38' Lt "M3" 76+52.84	D-5	37	a
		b	S														0.8					15" APC W/ MINOR Conc BACKFILL				b
		c		1						0.4	2.0			326	1.0							G1 Mod (CASE 3) DI	52.83' Lt "M3" 77+73.59			c
		d	S														0.8					15" APC W/ MINOR Conc BACKFILL				d
		e		1						0.3	2.0			326	1.0							G1 Mod (CASE 3) DI	53.73' Lt "M3" 76+63.24			e
		f	S																			15" APC				f
		g					1			4.9	6.3			195	1.5							MH CITY TYPE 1	75.95' Lt "M3" 76+94.81			g
		h	S													0.1						15" APC W/ PIPE CONNECTION				h
				3	3		1							1779	9	1	2					SUBTOTAL (DQ-14)				

APPROVED FOR DRAINAGE WORK ONLY

DRAINAGE QUANTITIES
DQ-14

RICHARD SAGASTUME	REVISED BY	RS	
STEVE LOUPE	DATE REVISED	5/3/18	
CALCULATED-DESIGNED BY			
CHECKED BY			
TIMOTHY J. LEE	CONSULTANT FUNCTIONAL SUPERVISOR		

STATE OF CALIFORNIA - DEPARTMENT OF TRANSPORTATION

X:\237_101_Mathilda\000_CAD\Sheets\1A-Drainage\1D-Quantities\04130002041d014.dgn

LAST REVISION 01-15-18
DATE PLOTTED => 9/17/2018
TIME PLOTTED => 7:43:44 PM

BORDER LAST REVISED 7/2/2010 | USERNAME => rsagastume | DGN FILE => 04130002041d014.dgn | RELATIVE BORDER SCALE IS IN INCHES 0 1 2 3 | UNIT 0000 | PROJECT NUMBER & PHASE 0413000204

Dist	COUNTY	ROUTE	POST MILES TOTAL PROJECT	SHEET No.	TOTAL SHEETS
04	SCL	101,237	45.2/45.8, 2.7/3.3	143	736

6-13-18
REGISTERED CIVIL ENGINEER DATE

6-20-18
PLANS APPROVAL DATE

REGISTERED PROFESSIONAL ENGINEER
STEVE LOUPE
No. 63575
Exp. 9/30/18
CIVIL
STATE OF CALIFORNIA

THE STATE OF CALIFORNIA OR ITS OFFICERS OR AGENTS SHALL NOT BE RESPONSIBLE FOR THE ACCURACY OR COMPLETENESS OF SCANNED COPIES OF THIS PLAN SHEET.

WMH CORPORATION
50 W San Fernando St
Suite 950
San Jose, CA 95113

VTA
3331 N First St
Building B
San Jose, Ca 95134

DRAINAGE QUANTITIES

DRAINAGE SHEET No.	DRAINAGE SYSTEM No.	DRAINAGE UNIT	REMOVE FLARED END SECTION (EA)	REMOVE INLET (EA)	CAP INLET (EA)	REMOVE CULVERT (LF)	CLEANING, INSPECTING, AND PREPARING CULVERT (LF)	ALTERNATIVE PIPE CULVERT (LF) 12"	15"	18"	24"	30"	REINFORCED CONCRETE PIPE (LF) 12" (CLASS V)	18" (CLASS III)	24" (CLASS III)	ALTERNATIVE FLARED END SECTION (EA) 12"	18"	24"	30"	DESCRIPTION	STATION	DRAINAGE SHEET No.	DRAINAGE SYSTEM No.	DRAINAGE UNIT
D-6	38	a				7.9														Rem Culv		D-6	38	a
		b													4.5					24" RCP W/ Conc COLLAR				b
		c																		G1 DI	21.50' Rt "L6" 152+06.12			c
		d													5.5					24" RCP W/ Conc COLLAR				d
		e				2.5														Rem Culv				e
		f		1																Rem INLET				f
		g				8.8														Rem Culv				g
		h													3.0					24" RCP W/ Conc COLLAR				h
		i																		CITY GO DI (W/ PIPE SCREEN INSERT)	24.0' Lt "L6" 152+04.86			i
		j													5.9					24" RCP W/ Conc COLLAR				j
		k		1																Rem INLET				k
		l				1.5														Rem Culv				l
D-6	39	a				15.1														Rem Culv		D-6	39	a
		b											3.0							12" RCP W/ Conc COLLAR				b
		c																		CITY GO DI (W/ PIPE SCREEN INSERT)	24.0' Lt "L6" 156+14.59			c
		d											13.8							12" RCP W/ Conc COLLAR				d
		e		1																Rem INLET				e
		f				1.7														Rem Culv				f
D-7	40	a																		G2 DI W/ SGD	42.23' Lt "D5" 217+14.48	D-7	40	a
		b								8.4										18" APC				b
		c														1				18" AFES	50.59' Lt "D5" 217+14.56			c
		d																		RSP				d
D-7	41	a			1															Cap INLET		D-7	41	a
		b																		HMA OSD				b
		c				26.5														Rem Culv				c
		d		1																Rem INLET				d
		e				9.7														Rem Culv				e
		f	1																	Rem FES				f
			1	4	1	72.8				8.4			16.8		18.9		1			SUBTOTAL (DQ-15)				
			16	19	1	661	257	22.0	123.0	1300.4	193.4	40.4	31.9	19.6	34.7	1	16	1	1	GRAND TOTAL				

APPROVED FOR DRAINAGE WORK ONLY

DRAINAGE QUANTITIES
DQ-15

REVISED BY	DATE REVISED
RS	5/3/18

CALCULATED-DESIGNED BY	CHECKED BY
RICHARD SAGASTUME	STEVE LOUPE

CONSULTANT FUNCTIONAL SUPERVISOR: TIMOTHY J. LEE

STATE OF CALIFORNIA - DEPARTMENT OF TRANSPORTATION

Caltrans

LAST REVISION 01-15-18 | DATE PLOTTED => 9/17/2018 | TIME PLOTTED => 7:43:45 PM

X:\237_101_Mathilda\000_CAD\Sheets\1A-Drainage\1D-Quantities\0413000204id015.dgn

BORDER LAST REVISED 7/2/2010 | USERNAME => rsagastume | DGN FILE => 0413000204id015.dgn | RELATIVE BORDER SCALE IS IN INCHES 0 1 2 3 | UNIT 0000 | PROJECT NUMBER & PHASE 0413000204

Dist	COUNTY	ROUTE	POST MILES TOTAL PROJECT	SHEET No.	TOTAL SHEETS
04	SCL	101,237	45.2/45.8, 2.7/3.3	144	736

6-13-18
REGISTERED CIVIL ENGINEER DATE

6-20-18
PLANS APPROVAL DATE

REGISTERED PROFESSIONAL ENGINEER
STEVE LOUPE
No. 63575
Exp. 9/30/18
CIVIL
STATE OF CALIFORNIA

THE STATE OF CALIFORNIA OR ITS OFFICERS OR AGENTS SHALL NOT BE RESPONSIBLE FOR THE ACCURACY OR COMPLETENESS OF SCANNED COPIES OF THIS PLAN SHEET.

WMH CORPORATION
50 W San Fernando St
Suite 950
San Jose, CA 95113

VTA
3331 N First St
Building B
San Jose, Ca 95134

DRAINAGE QUANTITIES

DRAINAGE SHEET No.	DRAINAGE SYSTEM No.	DRAINAGE UNIT	PIPE JOINT CLASSIFICATION (N)	GRATE/COVER (N)				ROCK SLOPE PROTECTION (60 LB, CLASS II, METHOD B)	ROCK SLOPE PROTECTION FABRIC (CI 8)	MAXIMUM COVER (N)	DRAINAGE					MINOR Conc			CONCRETE (DITCH LINING)	HOT MIX ASPHALT (TYPE A)	PLACE HOT MIX ASPHALT (MISC AREA)	DESCRIPTION	STATION	DRAINAGE SHEET No.	DRAINAGE SYSTEM No.	DRAINAGE UNIT
				TYPE 24-12 (N)	TYPE 24-10C (N)	PLATE (N)	HINGED MH RIM & COVER (N)				DESIGN HEIGHT "H" (N)	SIDEWALK DRAIN (N)	GRATED LINE DRAIN	MISCELLANEOUS IRON AND STEEL	STRUCTURAL CONCRETE, DRAINAGE INLET	MISCELLANEOUS CONSTRUCTION	BACKFILL	GUTTER DEPRESSION								
				EACH				CY	SQYD	FT	LF			LB	CY	CY			CY	TON	SQYD					
D-6	38	a														0.3						Rem Culv		D-6	38	a
		b	S													0.3						24" RCP W/ Conc COLLAR				b
		c			1					5.7	8.1			202	2.1							G1 DI	21.50' Rt "L6" 152+06.12			c
		d	S													0.3						24" RCP W/ Conc COLLAR				d
		e																				Rem Culv				e
		f																				Rem INLET				f
		g																				Rem Culv				g
		h	S																			24" RCP W/ Conc COLLAR				h
		i			1					6.1	8.5			202	2.6							CITY GO DI (W/ PIPE SCREEN INSERT)	24.0' Lt "L6" 152+04.86			i
		j														0.3						24" RCP W/ Conc COLLAR				j
		k																				Rem INLET				k
		l																				Rem Culv				l
D-6	39	a																				Rem Culv		D-6	39	a
		b	S													0.2						12" RCP W/ Conc COLLAR				b
		c			1					3.4	4.8			202	1.7							CITY GO DI (W/ PIPE SCREEN INSERT)	24.0' Lt "L6" 156+14.59			c
		d	S													0.2						12" RCP W/ Conc COLLAR				d
		e																				Rem INLET				e
		f																				Rem Culv				f
D-7	40	a		1						0.9	2.8			326	2.0			1.0				G2 DI W/ SGD	42.23' Lt "D5" 217+14.48	D-7	40	a
		b	S																			18" APC				b
		c																				18" AFES	50.59' Lt "D5" 217+14.56			c
		d						9.4	28.0													RSP				d
D-7	41	a																				Cap INLET		D-7	41	a
		b																		0.3	3.7	HMA OSD				b
		c																				Rem Culv				c
		d																				Rem INLET				d
		e																				Rem Culv				e
		f																				Rem FES				f
				1	3			9.4	28.0					932	8.3	1.1		1.0		0.3	3.7	SUBTOTAL (DQ-16)				
				12	11	17	3	131.5	416.1			19	516.6	9677	86.9	4.3	22.4	5.9	62.0	2.1*	25.9	GRAND TOTAL				

(*) - QUANTITY INCLUDED IN ROADWAY SUMMARY TABLE.

APPROVED FOR DRAINAGE WORK ONLY

DRAINAGE QUANTITIES
DQ-16

RICHARD SAGASTUME	REVISED BY	RS		
STEVE LOUPE	DATE REVISED	5/3/18		
CALCULATED-DESIGNED BY				
CHECKED BY				
TIMOTHY J. LEE	CONSULTANT FUNCTIONAL SUPERVISOR			
STATE OF CALIFORNIA - DEPARTMENT OF TRANSPORTATION				

X:\237_101_Mathilda\000_CAD\Sheets\1A-Drainage\1D-Quantities\0413000204id016.dgn

LAST REVISION 01-15-18
DATE PLOTTED => 9/17/2018
TIME PLOTTED => 7:43:47 PM

BORDER LAST REVISED 7/2/2010 | USERNAME => rsagastume | DGN FILE => 0413000204id016.dgn | RELATIVE BORDER SCALE IS IN INCHES 0 1 2 3 | UNIT 0000 | PROJECT NUMBER & PHASE 0413000204

NOTE: FOR COMPLETE RIGHT OF WAY AND ACCURATE ACCESS DATA, SEE RIGHT OF WAY RECORD MAPS AT DISTRICT OFFICE.

1. FIELD VERIFY EXISTING IRRIGATION AND PLANTING LIMITS AND SITE CONDITIONS. SEE SPECIAL PROVISIONS.
2. MAINTAIN EXISTING PLANTING AND IRRIGATION ON CITY IRRIGATION SYSTEM IN Approx AREA SHOWN.
3. LOCATE AND CAP EXISTING MAIN LINE AT THIS APPROXIMATE LOCATION. PLACE VALVE BOX OVER CAP.
4. EXISTING IRRIGATION WITHIN GRADING AND CONSTRUCTION LIMITS TO BE REMOVED.
5. EXISTING IRRIGATION LOCATION IS SHOWN DIAGRAMATICALLY FOR CLARITY. CONTRACTOR WILL FIELD VERIFY THE EXACT LOCATION.
6. REMOVE AND DISPOSE OF EXISTING IRRIGATION CONTROLLER. TURN OFF AND MAKE SAFE POWER SUPPLY TO EXISTING CONTROLLER AT POWER SUPPLY PEDESTAL. REFER TO ELECTRICAL PLANS FOR POWER SHUT OFF.
7. (E) IRRIGATION MAIN LINE TO REMAIN.
8. BIOSWALE

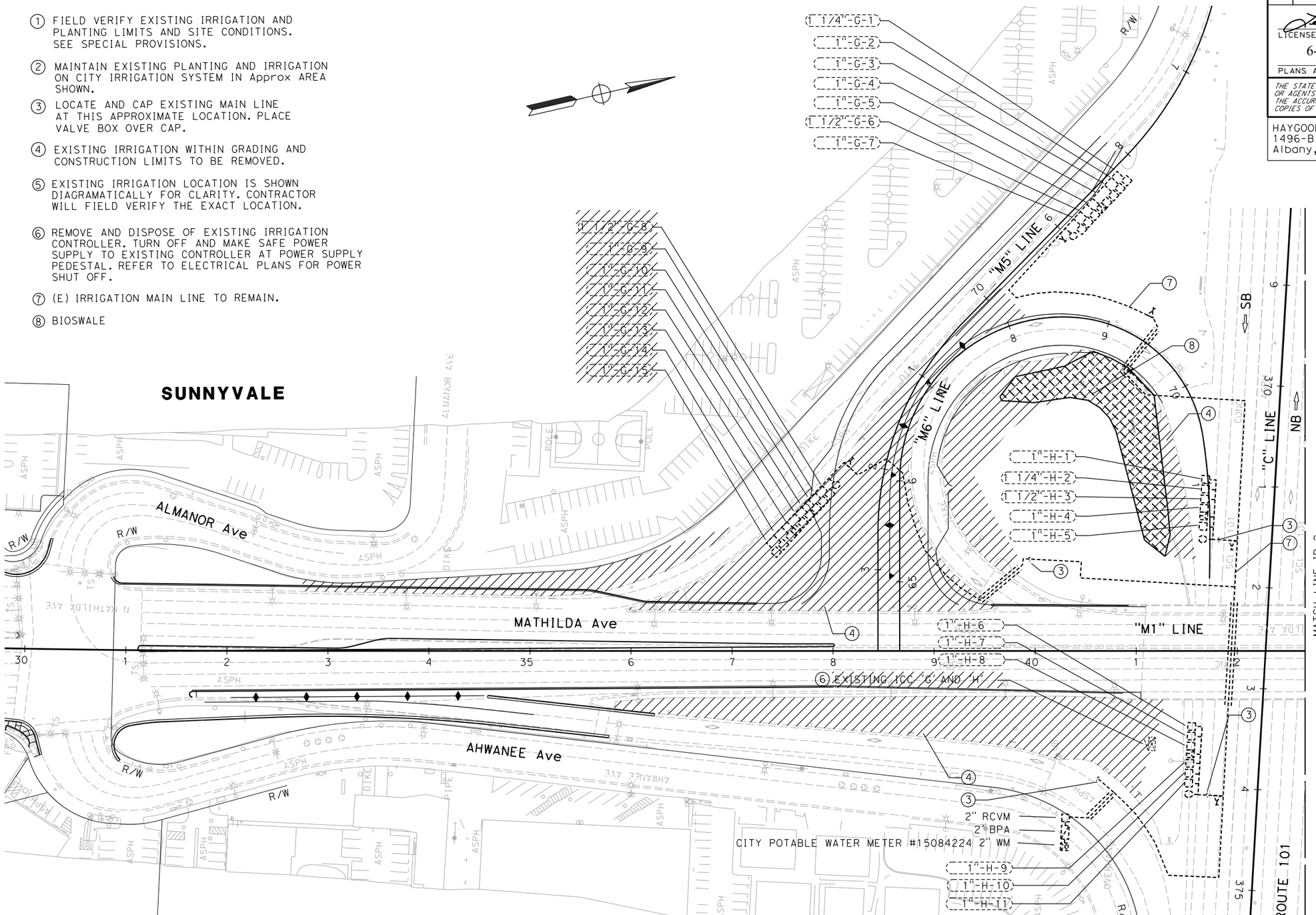

Dist	COUNTY	ROUTE	POST MILES TOTAL PROJECT	SHEET No.	TOTAL SHEETS
04	SCL	237,101	2.7/3.3, 45.2/45.8	145	736

LICENSED LANDSCAPE ARCHITECT
6-20-18
PLANS APPROVAL DATE

LICENSED LANDSCAPE ARCHITECT
LEAH C. HAYGOOD NO. 1595
Signature
08-31-17
Renewal Date
Date
STATE OF CALIFORNIA

THE STATE OF CALIFORNIA OR ITS OFFICERS OR AGENTS SHALL NOT BE RESPONSIBLE FOR THE ACCURACY OR COMPLETENESS OF SCANNED COPIES OF THIS PLAN SHEET.

HAYGOOD & ASSOCIATES
1496-B Solano Avenue
Albany, CA 94706

VTA
3331 N First St
Building B
San Jose, Ca 95134

IRRIGATION REMOVAL PLAN

SCALE: 1" = 50'

IR-1

APPROVED FOR IRRIGATION REMOVAL WORK ONLY

REVISED BY | DATE REVISED
S. KENNEY | L. HAYGOOD
CALCULATED-DESIGNED BY | CHECKED BY
SENIOR LANDSCAPE ARCHITECT | LEAH C. HAYGOOD
STATE OF CALIFORNIA - DEPARTMENT OF TRANSPORTATION
Caltrans

LAST REVISION 02-18-16
DATE PLOTTED => 5/3/2018
TIME PLOTTED => 10:49:14 AM

$FREQUEST

BORDER LAST REVISED 9/9/2010 | USERNAME => Simon | DGN FILE => 0412000434ir001.dgn | RELATIVE BORDER SCALE IS IN INCHES 0 1 2 3 | UNIT 0000 | PROJECT NUMBER & PHASE 0412000434

NOTE: FOR COMPLETE RIGHT OF WAY AND ACCURATE ACCESS DATA, SEE RIGHT OF WAY RECORD MAPS AT DISTRICT OFFICE.

Dist	COUNTY	ROUTE	POST MILES TOTAL PROJECT	SHEET No.	TOTAL SHEETS
04	SCL	237,101	2.7/3.3, 45.2/45.8	146	736

LICENSED LANDSCAPE ARCHITECT
6-20-18
PLANS APPROVAL DATE

LICENSED LANDSCAPE ARCHITECT LEAH C. HAYGOOD NO. 1596 Signature 08-31-17 Renewal Date Date STATE OF CALIFORNIA

THE STATE OF CALIFORNIA OR ITS OFFICERS OR AGENTS SHALL NOT BE RESPONSIBLE FOR THE ACCURACY OR COMPLETENESS OF SCANNED COPIES OF THIS PLAN SHEET.

HAYGOOD & ASSOCIATES
1496-B Solano Avenue
Albany, CA 94706

VTA
3331 N First St
Building B
San Jose, Ca 95134

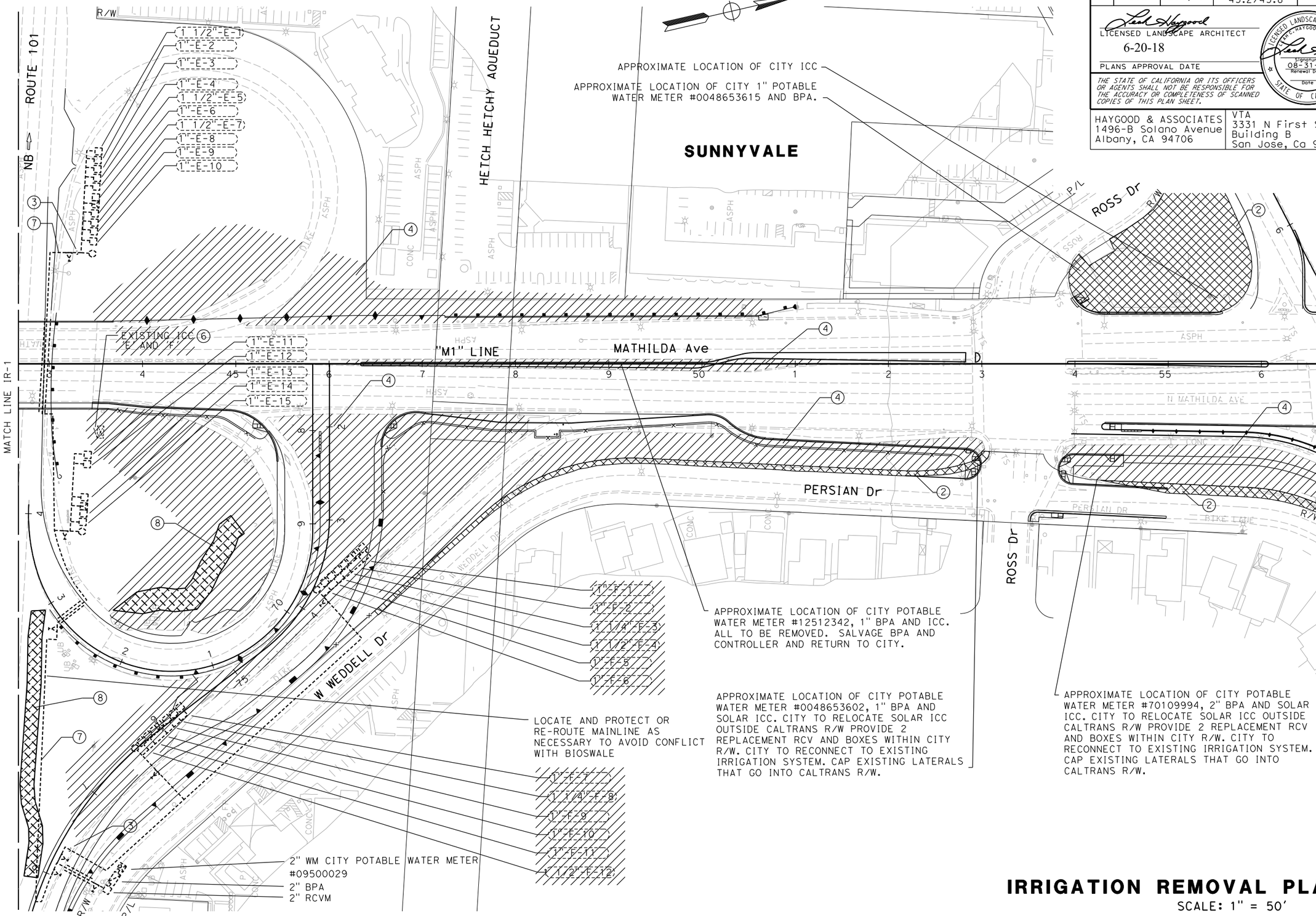

IRRIGATION REMOVAL PLAN

SCALE: 1" = 50'

IR-2

APPROVED FOR IRRIGATION REMOVAL WORK ONLY

REVISED BY | DATE REVISED
S. KENNEY | L. HAYGOOD
CALCULATED-DESIGNED BY | CHECKED BY
SENIOR LANDSCAPE ARCHITECT | LEAH C. HAYGOOD

STATE OF CALIFORNIA - DEPARTMENT OF TRANSPORTATION
Caltrans

LAST REVISION 02-18-16
DATE PLOTTED => 5/3/2018
TIME PLOTTED => 10:49:15 AM

NOTE: FOR COMPLETE RIGHT OF WAY AND ACCURATE ACCESS DATA, SEE RIGHT OF WAY RECORD MAPS AT DISTRICT OFFICE.

Dist	COUNTY	ROUTE	POST MILES TOTAL PROJECT	SHEET No.	TOTAL SHEETS
04	SCL	237,101	2.7/3.3, 45.2/45.8	147	736

LICENSED LANDSCAPE ARCHITECT
6-20-18
PLANS APPROVAL DATE

LICENSED LANDSCAPE ARCHITECT LEAH C. HAYGOOD No. 1575 Signature 08-31-17 Renewal Date Date STATE OF CALIFORNIA

THE STATE OF CALIFORNIA OR ITS OFFICERS OR AGENTS SHALL NOT BE RESPONSIBLE FOR THE ACCURACY OR COMPLETENESS OF SCANNED COPIES OF THIS PLAN SHEET.

HAYGOOD & ASSOCIATES
1496-B Solano Avenue
Albany, CA 94706

VTA
3331 N First St
Building B
San Jose, Ca 95134

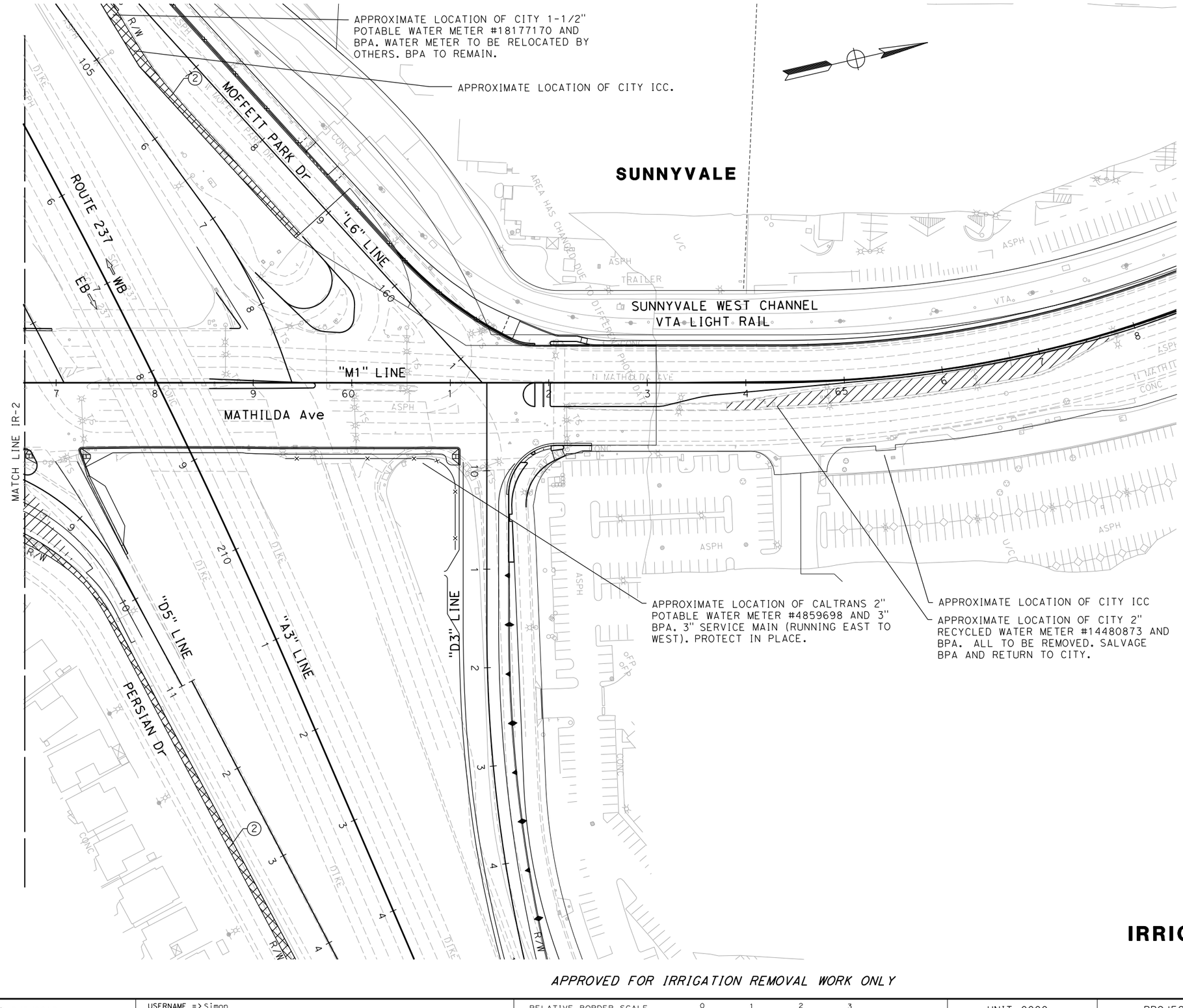

IRRIGATION REMOVAL PLAN

SCALE: 1" = 50'

IR-3

APPROVED FOR IRRIGATION REMOVAL WORK ONLY

REVISED BY	DATE REVISED
S. KENNEY	L. HAYGOOD
CALCULATED-DESIGNED BY	CHECKED BY
SENIOR LANDSCAPE ARCHITECT	LEAH C. HAYGOOD

STATE OF CALIFORNIA - DEPARTMENT OF TRANSPORTATION
Caltrans

LAST REVISION 02-18-16
DATE PLOTTED => 5/3/2018
TIME PLOTTED => 10:49:15 AM

NOTES:

1. FOR ACCURATE RIGHT OF WAY DATA, CONTACT RIGHT OF WAY ENGINEERING AT THE DISTRICT OFFICE.
2. LOCATION OF UTILITY FACILITIES SHOWN ON THESE PLANS ARE APPROXIMATE AND SHALL BE FIELD VERIFIED BY THE CONTRACTOR PRIOR TO CONSTRUCTION.
3. FOR LIMITS OF IRRIGATION SYSTEM REMOVAL, SEE IRRIGATION REMOVAL PLANS.
4. UTILITY OWNERSHIP:

GAS	- PACIFIC GAS & ELECTRIC COMPANY (PG&E)
ELECTRIC	- PACIFIC GAS & ELECTRIC COMPANY (PG&E)
WATER	- CITY OF SUNNYVALE (COS)
SANITARY SEWER	- CITY OF SUNNYVALE (COS)
TELEPHONE	- AMERICAN TELEPHONE AND TELEGRAPH (AT&T)
FIBER OPTIC	- VERIZON, XO COMMUNICATIONS, ZAYO, ON FIBER, FRONTIER, COMCAST, AT&T, CITY OF SUNNYVALE AND LEVEL 3 COMMUNICATIONS
RECYCLED WATER	- CITY OF SUNNYVALE
NITROGEN GAS	- AIR PRODUCTS

ABBREVIATIONS:

AT&T	AMERICAN TELEPHONE & TELEGRAPH
CCP	CONCRETE CYLINDER PIPE
C	SIGNAL INTERCONNECT
COS	CITY OF SUNNYVALE
EP	ELECTRONIC PROBING
G	NATURAL GAS
HPG	HIGH PRESSURE GAS
L3C	LEVEL 3 COMMUNICATIONS
PG&E	PACIFIC GAS AND ELECTRIC
PH	POTHOLE
SCVWD	SANTA CLARA VALLEY WATER DISTRICT
SFPUC	SAN FRANCISCO PUBLIC UTILITIES COMMISSION
T	TELEPHONE
TC	TELECOMMUNICATION
SS	SANITARY SEWER

LEGEND:

- POTHOLE LOCATION
- # — POTHOLE NUMBER/ ELECTRONIC PROBING
- —n— NITROGEN GAS LINE
- UTILITY TO BE REMOVED OR ABANDONED
- 1 — ADJUST FRAME AND COVER TO GRADE (BY CONTRACTOR)
- 2 — ADJUST FRAME AND COVER TO GRADE (BY OTHERS)
- ABANDONED UTILITY
- —C— SIGNAL INTERCONNECT
- SFPUC Ease

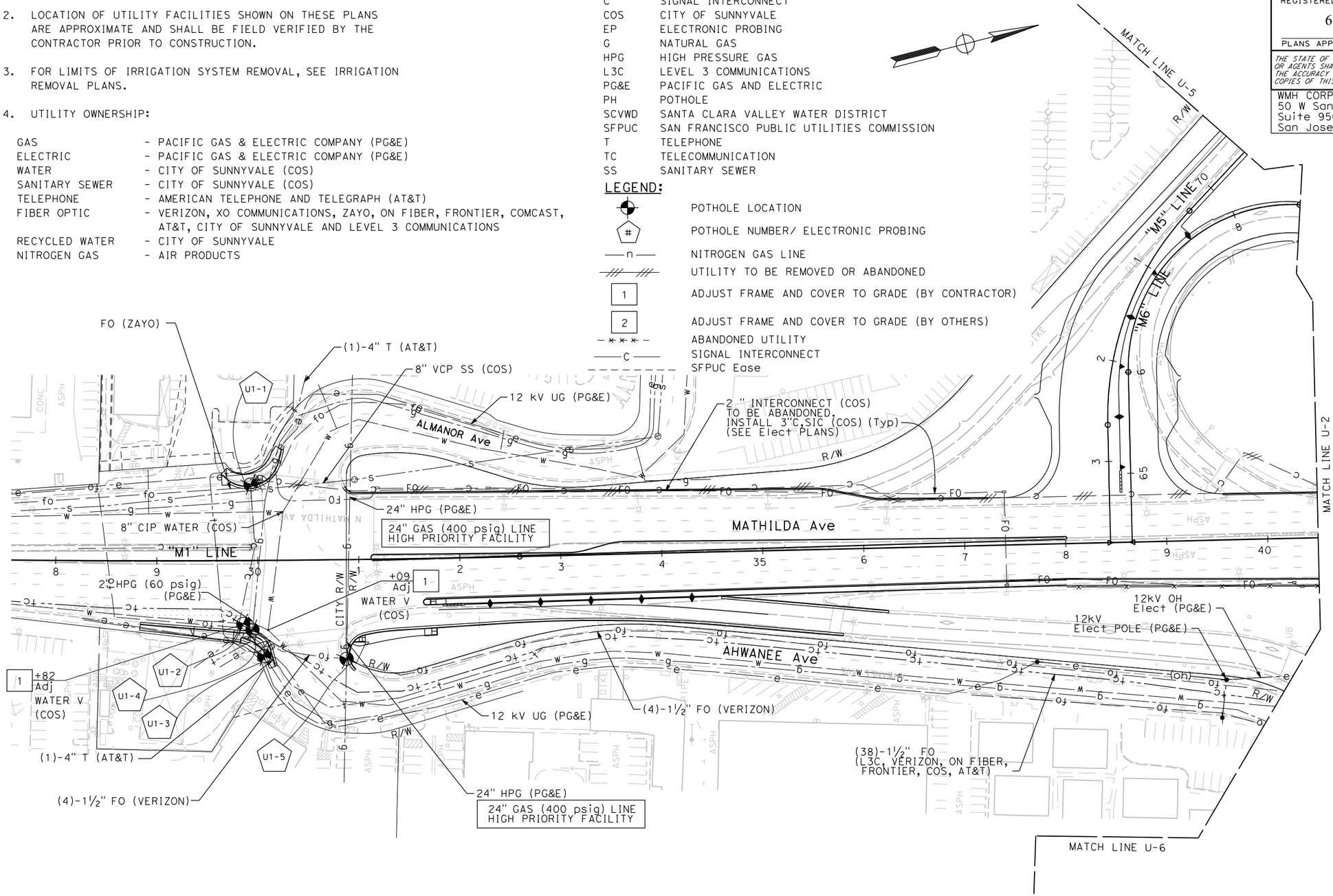

UTILITY PLAN

SCALE: 1" = 50'

APPROVED FOR UTILITY INFORMATION ONLY.

U-1

Dist	COUNTY	ROUTE	POST MILES TOTAL PROJECT	SHEET No.	TOTAL SHEETS
04	SCL	101,237	45.2/45.8, 2.7/3.3	148	736

6-13-18
REGISTERED CIVIL ENGINEER — DATE

6-20-18
PLANS APPROVAL DATE

REGISTERED PROFESSIONAL ENGINEER — STEVE LOUPE — No. 63575 — Exp. 9/30/18 — CIVIL — STATE OF CALIFORNIA

THE STATE OF CALIFORNIA OR ITS OFFICERS OR AGENTS SHALL NOT BE RESPONSIBLE FOR THE ACCURACY OR COMPLETENESS OF SCANNED COPIES OF THIS PLAN SHEET.

WMH CORPORATION
50 W San Fernando St
Suite 950
San Jose, CA 95113

VTA
3331 N First St
Building B
San Jose, Ca 95134

REVISED BY	DATE REVISED
SCV	05/03/18

CALCULATED-DESIGNED BY: RALEIGH JINKS
CHECKED BY: STEVE LOUPE
CONSULTANT FUNCTIONAL SUPERVISOR: TIMOTHY J. LEE
STATE OF CALIFORNIA - DEPARTMENT OF TRANSPORTATION
Caltrans

LAST REVISION: 01-15-18
DATE PLOTTED => 6/20/2018
TIME PLOTTED => 11:11:05 AM

X:\237_101_Mathilda\V000_CADVSheets\KA-Utility\KA-Plans\0413000204ka001.dgn

BORDER LAST REVISED 7/2/2010 | USERNAME => Eilif | DGN FILE => 0413000204ka001.dgn | RELATIVE BORDER SCALE IS IN INCHES 0 1 2 3 | UNIT 0000 | PROJECT NUMBER & PHASE 0413000204

NOTE:

FOR ACCURATE RIGHT OF WAY DATA, CONTACT RIGHT OF WAY ENGINEERING AT THE DISTRICT OFFICE.

Dist	COUNTY	ROUTE	POST MILES TOTAL PROJECT	SHEET No.	TOTAL SHEETS
04	SCL	101,237	45.2/45.8, 2.7/3.3	149	736

REGISTERED CIVIL ENGINEER 6-13-18 DATE

6-20-18

PLANS APPROVAL DATE

REGISTERED PROFESSIONAL ENGINEER STEVE LOUPE No. 63575 Exp. 9/30/18 CIVIL STATE OF CALIFORNIA

THE STATE OF CALIFORNIA OR ITS OFFICERS OR AGENTS SHALL NOT BE RESPONSIBLE FOR THE ACCURACY OR COMPLETENESS OF SCANNED COPIES OF THIS PLAN SHEET.

WMH CORPORATION
50 W San Fernando St
Suite 950
San Jose, CA 95113

VTA
3331 N First St
Building B
San Jose, Ca 95134

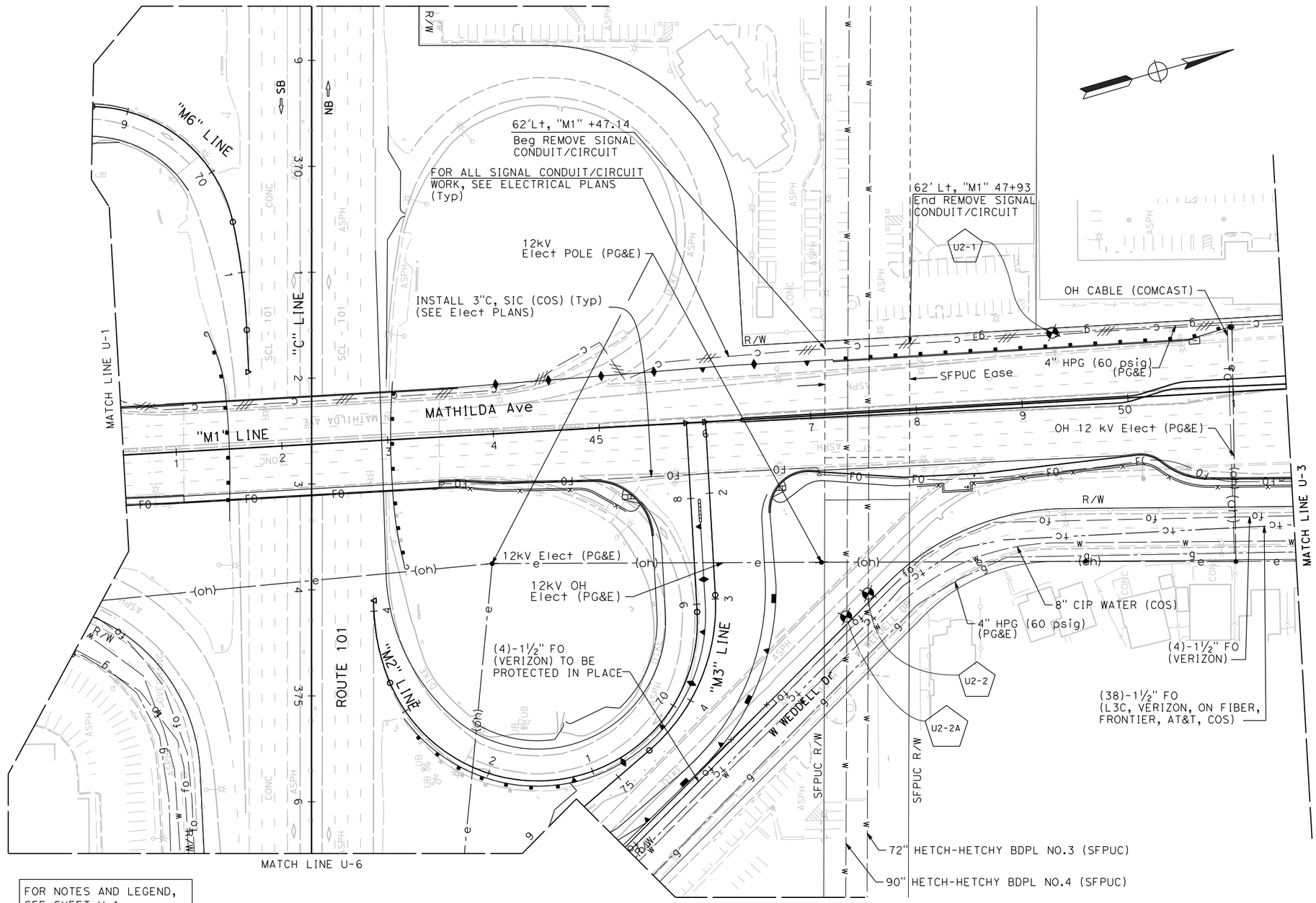

FOR NOTES AND LEGEND, SEE SHEET U-1

APPROVED FOR UTILITY INFORMATION ONLY.

UTILITY PLAN

SCALE: 1" = 50'

U-2

STATE OF CALIFORNIA - DEPARTMENT OF TRANSPORTATION

Caltrans

CONSULTANT FUNCTIONAL SUPERVISOR: TIMOTHY J. LEE

CALCULATED-DESIGNED BY: RALEIGH JINKS

CHECKED BY: STEVE LOUPE

REVISED BY: SCV

DATE REVISED: 05/03/18

X:\237_101_Mathilda\000_CAD\Sheets\KA-Utility\KA-Plans\0413000204ka002.dgn

LAST REVISION 01-15-18

DATE PLOTTED => 6/20/2018
TIME PLOTTED => 11:11:08 AM

BORDER LAST REVISED 7/2/2010

USERNAME => Eilif
DGN FILE => 0413000204ka002.dgn

RELATIVE BORDER SCALE IS IN INCHES 0 1 2 3

UNIT 0000

PROJECT NUMBER & PHASE 0413000204

NOTE:

FOR ACCURATE RIGHT OF WAY DATA, CONTACT
RIGHT OF WAY ENGINEERING AT THE DISTRICT OFFICE.

Dist	COUNTY	ROUTE	POST MILES TOTAL PROJECT	SHEET No.	TOTAL SHEETS
04	SCL	101,237	45.2/45.8, 2.7/3.3	150	736

REGISTERED CIVIL ENGINEER — 6-13-18 DATE

6-20-18
PLANS APPROVAL DATE

REGISTERED PROFESSIONAL ENGINEER — STEVE LOUPE — No. 63575 — Exp. 9/30/18 — CIVIL — STATE OF CALIFORNIA

THE STATE OF CALIFORNIA OR ITS OFFICERS OR AGENTS SHALL NOT BE RESPONSIBLE FOR THE ACCURACY OR COMPLETENESS OF SCANNED COPIES OF THIS PLAN SHEET.

WMH CORPORATION 50 W San Fernando St Suite 950 San Jose, CA 95113	VTA 3331 N First St Building B San Jose, Ca 95134

REVISED BY	DATE REVISED
SCV	05/03/18

CALCULATED-DESIGNED BY: RALEIGH JINKS
CHECKED BY: STEVE LOUPE
CONSULTANT FUNCTIONAL SUPERVISOR: TIMOTHY J. LEE

STATE OF CALIFORNIA - DEPARTMENT OF TRANSPORTATION
Caltrans

X:\237_101_Mathilda\000_CAD\Sheets\KA-Utility\KA-Plans\0413000204ka003.dgn

MATCH LINE U-8
MATCH LINE U-2
MATCH LINE U-4
MATCH LINE U-9
ROSS Dr
MATHILDA Ave
N MATHILDA AVE
PERSIAN Dr
ROUTE 237
MOFFETT PARK Dr
SUNNYVALE WEST CHANNEL
"M1" LINE
"D5a" LINE
"D5" LINE
"L6" LINE
"D3" LINE
"A3" LINE
EB
WB
16" CCP WATER MAIN (COS)
8" CIP WATER MAIN (COS)
4" HPG (60 psig) (PG&E)
2" INTERCONNECT (COS) TO BE ABANDONED. INSTALL 3"C, SIC (COS) (Typ) (SEE Elect PLANS)
OH CABLE (COMCAST)
(4)-4" T (AT&T)
(4)-1¼" FO (VERIZON)
24" HPG (PG&E)
4" HPG (60 psig) 12 kV UG (PG&E)
+24 Adj GAS VAULT (PG&E) 1
(2)-4" Elect (PG&E)
15" VCP (COS) ABANDONED
+56 Adj Elect VAULT BY OTHERS (PG&E) 2
15" VCP SS (COS)
+83 Adj SEWER MH (COS) 1
(6)-3½" T (AT&T)
(3)-4" T (AT&T)
+59, +60, +61 Adj WATER VALVE (COS) 1
2" INTERCONNECT (COS) TO BE ABANDONED (SEE Elect PLANS)
8" RCW (COS)
T/FO (AT&T)
10" VCP (COS)
12" ACP WATER (COS)
12 kV UG 4" HPG (PG&E)
CONNECT 3" C, SIC TO EXISTING SIC (SEE Elect PLANS)
(VERIZON) (3)-1½" FO
(3)-1½" FO (VERIZON)
(L3C, VERIZON, ON FIBER, FRONTIER, COS, AT&T)
10" CIP WATER MAIN (COS)
+21 Adj WATER V (COS) 1
+36 Adj WATER V (COS) 1
+28 Adj WATER V (COS) 1
+58 Adj 16" CCP WATER (COS) 1
24" GAS (400 psig) LINE HIGH PRIORITY FACILITY
OH 12 kV (PG&E)
16" CCP WATER MAIN (COS)
4" WATER (COS) TO BE REMOVED AND CAPPED
(3)-4" T (AT&T)
6" T (AT&T)
4" HPG (60 psig) (PG&E)
8" 12 kV Elect
PH NOT PERFORMED
(15)-4" T (AT&T)
JUNCTION BOX BY OTHERS (VERIZON)
(3)-1 1/2 " FO (VERIZON)
4" HPG(60 psig) (PG&E)
1" (Comm)
8" RCW (COS)
(6)- DUCT T (AT&T)
(3)- 1¼" FO (VERIZON)
12" ACP WATER (COS)
4" HPG (60 psig) (2)-8" 12 kV Elect (PG&E)
(5)-1¼" FO (VERIZON)
PH NOT PERFORMED
(2)-8" 12 kV Elect (PG&E)
U3-1 U3-2 U3-3 U3-4 U3-5 U3-6 U3-7 U3-8 U3-9 U3-10 U3-11 U3-12 U3-13 U3-14 U3-15

FOR NOTES AND LEGEND, SEE SHEET U-1

APPROVED FOR UTILITY INFORMATION ONLY.

UTILITY PLAN

SCALE: 1" = 50'

U-3

LAST REVISION: 01-15-18
DATE PLOTTED => 6/20/2018
TIME PLOTTED => 11:11:10 AM

BORDER LAST REVISED 7/2/2010 | USERNAME => Eilif | DGN FILE => 0413000204ka003.dgn | RELATIVE BORDER SCALE IS IN INCHES 0 1 2 3 | UNIT 0000 | PROJECT NUMBER & PHASE 0413000204

NOTE:

FOR ACCURATE RIGHT OF WAY DATA, CONTACT RIGHT OF WAY ENGINEERING AT THE DISTRICT OFFICE.

Dist	COUNTY	ROUTE	POST MILES TOTAL PROJECT	SHEET No.	TOTAL SHEETS
04	SCL	101,237	45.2/45.8, 2.7/3.3	151	736

REGISTERED CIVIL ENGINEER 6-13-18 DATE

6-20-18

PLANS APPROVAL DATE

REGISTERED PROFESSIONAL ENGINEER STEVE LOUPE No. 63575 Exp. 9/30/18 CIVIL STATE OF CALIFORNIA

THE STATE OF CALIFORNIA OR ITS OFFICERS OR AGENTS SHALL NOT BE RESPONSIBLE FOR THE ACCURACY OR COMPLETENESS OF SCANNED COPIES OF THIS PLAN SHEET.

WMH CORPORATION
50 W San Fernando St
Suite 950
San Jose, CA 95113

VTA
3331 N First St
Building B
San Jose, Ca 95134

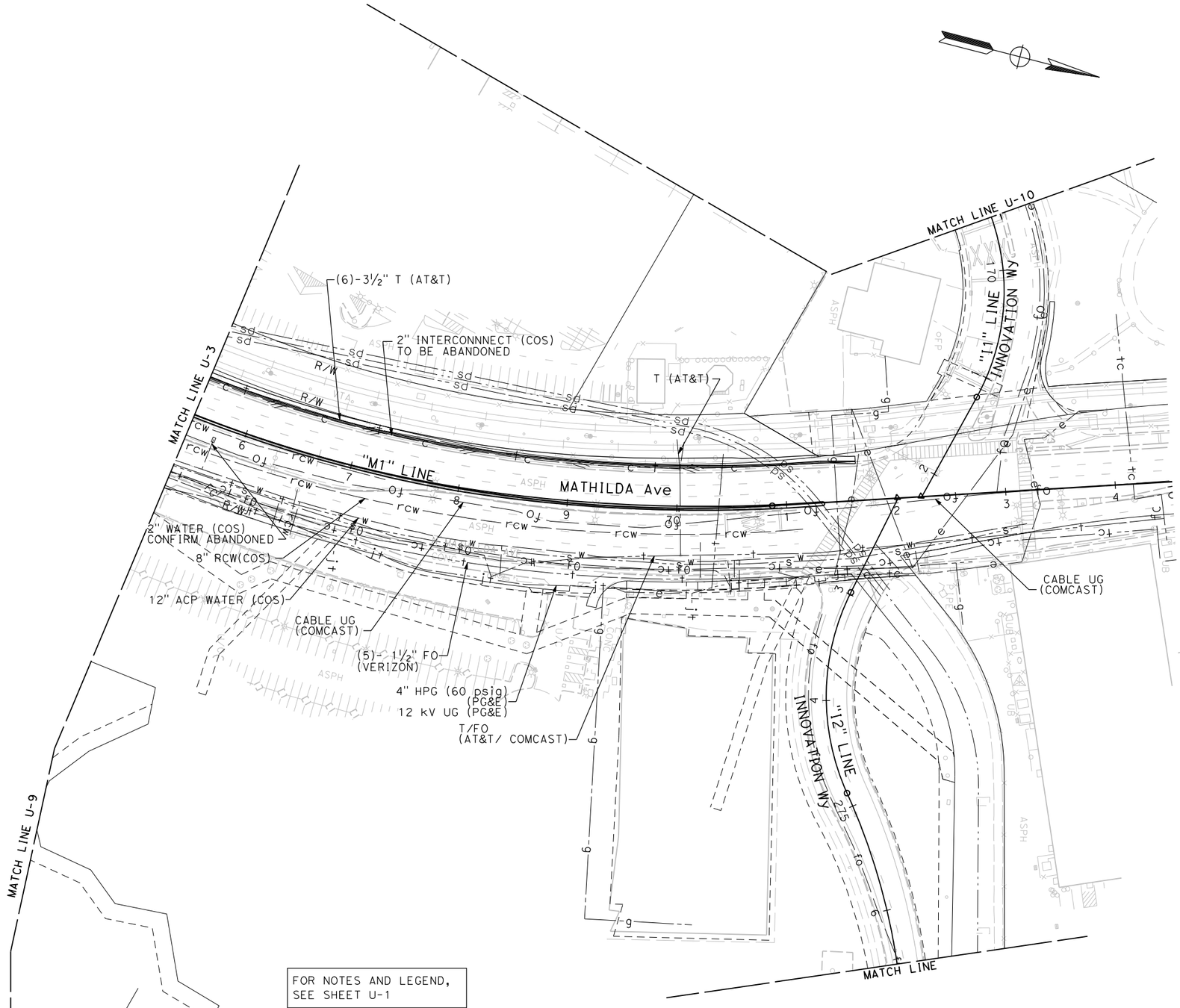

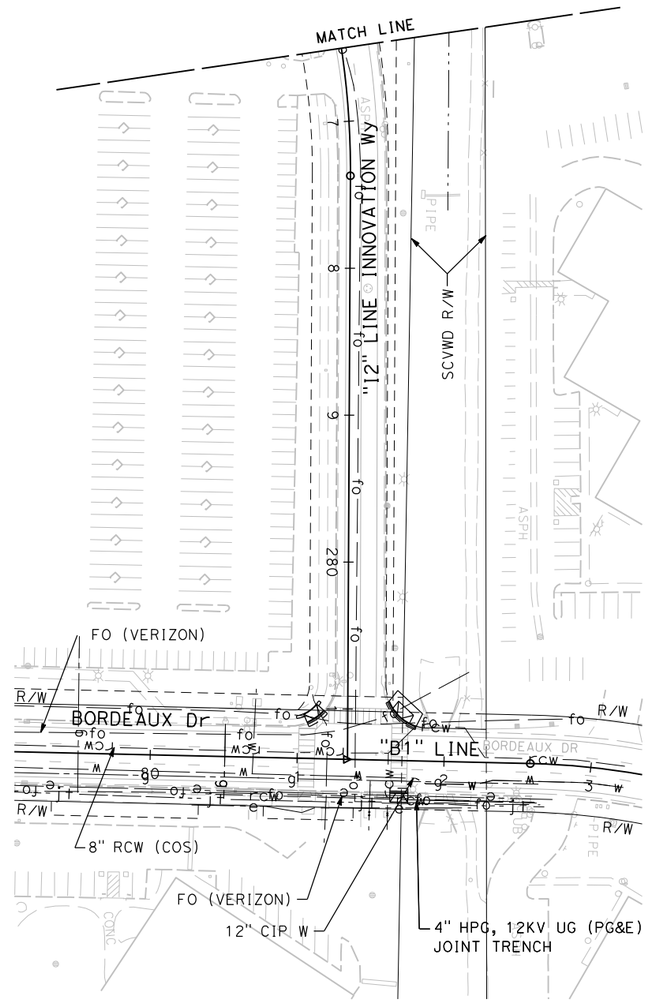

FOR NOTES AND LEGEND, SEE SHEET U-1

APPROVED FOR UTILITY INFORMATION ONLY.

UTILITY PLAN

SCALE: 1" = 50'

U-4

STATE OF CALIFORNIA - DEPARTMENT OF TRANSPORTATION	CONSULTANT FUNCTIONAL SUPERVISOR: TIMOTHY J. LEE	CALCULATED-DESIGNED BY: RALEIGH JINKS	CHECKED BY: STEVE LOUPE	REVISED BY: SCV
				DATE REVISED: 05/03/18

X:\237_101_Mathilda\000_CAD\Sheets\KA-Utility\KA-Plans\0413000204ka004.dgn

LAST REVISION 01-15-18 DATE PLOTTED => 6/20/2018 TIME PLOTTED => 11:11:13 AM

BORDER LAST REVISED 7/2/2010 | USERNAME => Eilif DGN FILE => 0413000204ka004.dgn | RELATIVE BORDER SCALE IS IN INCHES 0 1 2 3 | UNIT 0000 | PROJECT NUMBER & PHASE 0413000204

NOTE:

FOR ACCURATE RIGHT OF WAY DATA, CONTACT
RIGHT OF WAY ENGINEERING AT THE DISTRICT OFFICE.

Dist	COUNTY	ROUTE	POST MILES TOTAL PROJECT	SHEET No.	TOTAL SHEETS
04	SCL	101,237	45.2/45.8, 2.7/3.3	152	736

6-13-18
REGISTERED CIVIL ENGINEER — DATE

6-20-18
PLANS APPROVAL DATE

REGISTERED PROFESSIONAL ENGINEER — STEVE LOUPE — No. 63575 — Exp. 9/30/18 — CIVIL — STATE OF CALIFORNIA

THE STATE OF CALIFORNIA OR ITS OFFICERS OR AGENTS SHALL NOT BE RESPONSIBLE FOR THE ACCURACY OR COMPLETENESS OF SCANNED COPIES OF THIS PLAN SHEET.

WMH CORPORATION 50 W San Fernando St Suite 950 San Jose, CA 95113	VTA 3331 N First St Building B San Jose, Ca 95134

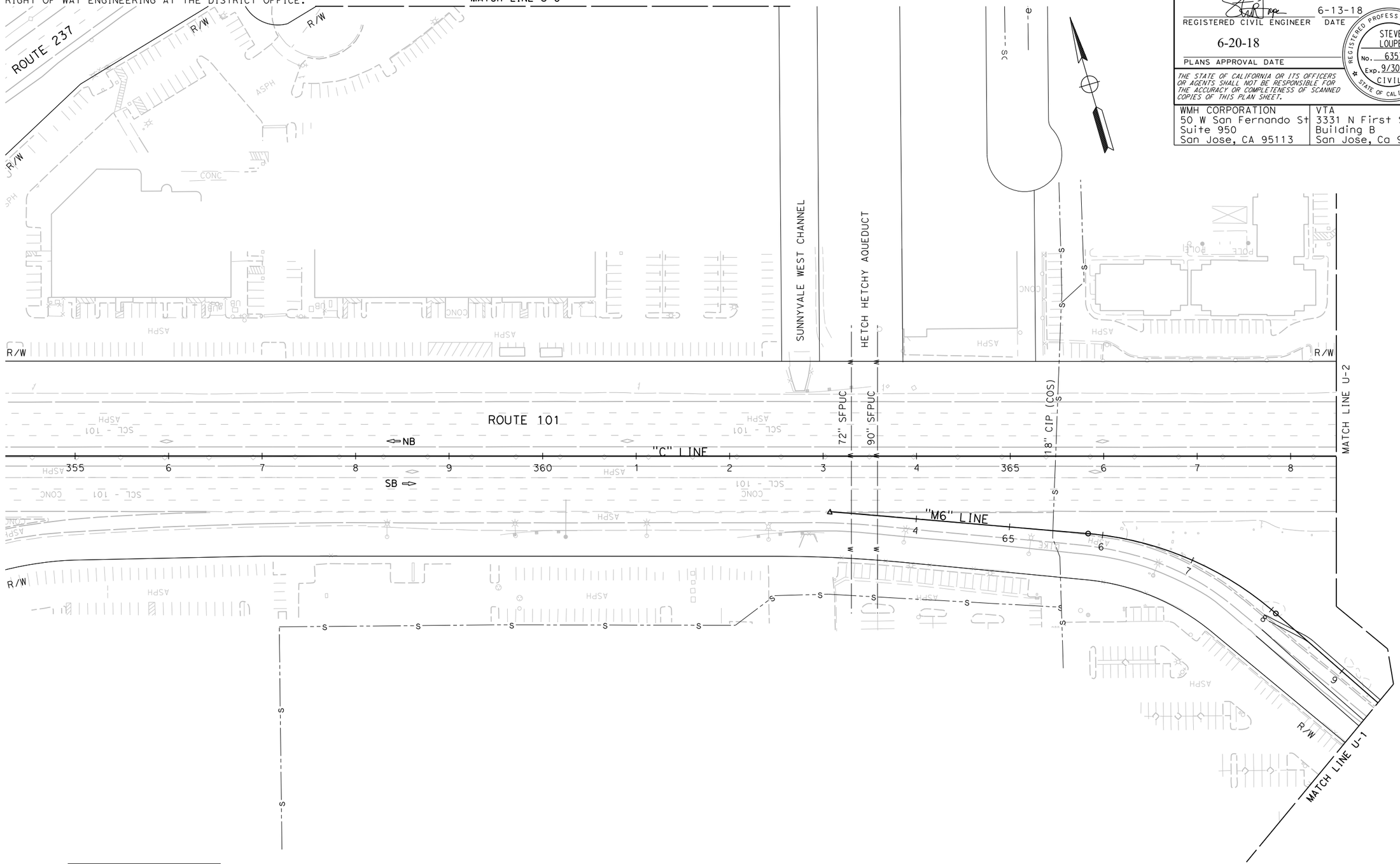

FOR NOTES AND LEGEND,
SEE SHEET U-1

APPROVED FOR UTILITY INFORMATION ONLY.

UTILITY PLAN
SCALE: 1" = 50'

U-5

REVISED BY	DATE REVISED
SCV	05/03/18

RALEIGH JINKS — CALCULATED-DESIGNED BY
STEVE LOUPE — CHECKED BY
TIMOTHY J. LEE — DISTRICT FUNCTIONAL SUPERVISOR

STATE OF CALIFORNIA - DEPARTMENT OF TRANSPORTATION — CONSULTANT

LAST REVISION 01-15-18 | DATE PLOTTED => 6/20/2018 | TIME PLOTTED => 11:11:16 AM

X:\237_101_Mathilda\000_CAD\Sheets\KA-Utility\KA-Plans\0413000204ka005.dgn

BORDER LAST REVISED 7/2/2010 | USERNAME => Eilif | DGN FILE => 0413000204ka005.dgn | RELATIVE BORDER SCALE IS IN INCHES 0 1 2 3 | UNIT 0000 | PROJECT NUMBER & PHASE 0413000204

NOTE:
FOR ACCURATE RIGHT OF WAY DATA, CONTACT
RIGHT OF WAY ENGINEERING AT THE DISTRICT OFFICE.

Dist	COUNTY	ROUTE	POST MILES TOTAL PROJECT	SHEET No.	TOTAL SHEETS
04	SCL	101,237	45.2/45.8, 2.7/3.3	153	736

REGISTERED CIVIL ENGINEER — 6-13-18 DATE

STEVE LOUPE No. 63575 Exp. 9/30/18 CIVIL — REGISTERED PROFESSIONAL ENGINEER — STATE OF CALIFORNIA

6-20-18
PLANS APPROVAL DATE

THE STATE OF CALIFORNIA OR ITS OFFICERS OR AGENTS SHALL NOT BE RESPONSIBLE FOR THE ACCURACY OR COMPLETENESS OF SCANNED COPIES OF THIS PLAN SHEET.

WMH CORPORATION 50 W San Fernando St Suite 950 San Jose, CA 95113	VTA 3331 N First St Building B San Jose, Ca 95134

72" HETCH-HETCHY (SFPUC)
90" HETCH-HETCHY (SFPUC)
(4)-1 1/2" FO (VERIZON)
TO BE PROTECTED IN PLACE
8" CIP WATER (COS)
4" HPG (60 psig)
(PG&E)
8" VCP SS (COS)
OH JOINT POLE/LINES
CABLE (COMCAST)
12 KV (PG&E)
TO BE PROTECTED IN PLACE
(38)-1½" FO
(L3C, VERIZON, ON FIBER, FRONTIER, AT&T, COS)
TELEPHONE U/G (AT&T)
FO (VERIZON)
27" VCP SS (COS)
12" ACP WATER (COS)
27" VCP SS (COS)
16" VCP SS (COS)
TELEPHONE U/G (AT&T)
4" HPG (60 psig) (PG&E)
6" NITROGEN GAS PIPELINE (AIR PRODUCTS)
HIGH PRIORITY FACILITY
U6-1
U6-2
U6-3
MATCH LINE U-2
"M3" LINE
"C" LINE
ROUTE 101
(4)-1½" FO (VERIZON)
4" HPG (60 psig)
8" CASING (PG&E)
NB
SB
W WEDDELL Dr
BORREGAS Ave
SAN ALESO Ave
AHWANEE Ave
NO IMPROVEMENTS PROPOSED IN THIS AREA
MATCH LINE U-7
SEE SHEET U-1
FOR NOTES AND LEGEND, SEE SHEET U-1
APPROVED FOR UTILITY INFORMATION ONLY.

UTILITY PLAN
SCALE: 1" = 50'

U-6

REVISED BY	DATE REVISED
SCV	05/03/18

CALCULATED-DESIGNED BY: RALEIGH JINKS
CHECKED BY: STEVE LOUPE
TIMOTHY J. LEE — CONSULTANT FUNCTIONAL SUPERVISOR
STATE OF CALIFORNIA - DEPARTMENT OF TRANSPORTATION — Caltrans®

LAST REVISION: DATE PLOTTED => 6/20/2018, TIME PLOTTED => 11:11:18 AM

X:\237_101_Mathilda\000_CAD\Sheets\KA-Utility\KA-Plans\0413000204ka006.dgn

BORDER LAST REVISED 7/2/2010 | USERNAME => Eilif, DGN FILE => 0413000204ka006.dgn | RELATIVE BORDER SCALE IS IN INCHES 0 1 2 3 | UNIT 0000 | PROJECT NUMBER & PHASE 0413000204

NOTE:

FOR ACCURATE RIGHT OF WAY DATA, CONTACT
RIGHT OF WAY ENGINEERING AT THE DISTRICT OFFICE.

Dist	COUNTY	ROUTE	POST MILES TOTAL PROJECT	SHEET No.	TOTAL SHEETS
04	SCL	101,237	45.2/45.8, 2.7/3.3	154	736

REGISTERED CIVIL ENGINEER — DATE: 6-13-18

PLANS APPROVAL DATE: 6-20-18

REGISTERED PROFESSIONAL ENGINEER — STEVE LOUPE — No. 63575 — Exp. 9/30/18 — CIVIL — STATE OF CALIFORNIA

THE STATE OF CALIFORNIA OR ITS OFFICERS OR AGENTS SHALL NOT BE RESPONSIBLE FOR THE ACCURACY OR COMPLETENESS OF SCANNED COPIES OF THIS PLAN SHEET.

WMH CORPORATION 50 W San Fernando St Suite 950 San Jose, CA 95113	VTA 3331 N First St Building B San Jose, Ca 95134

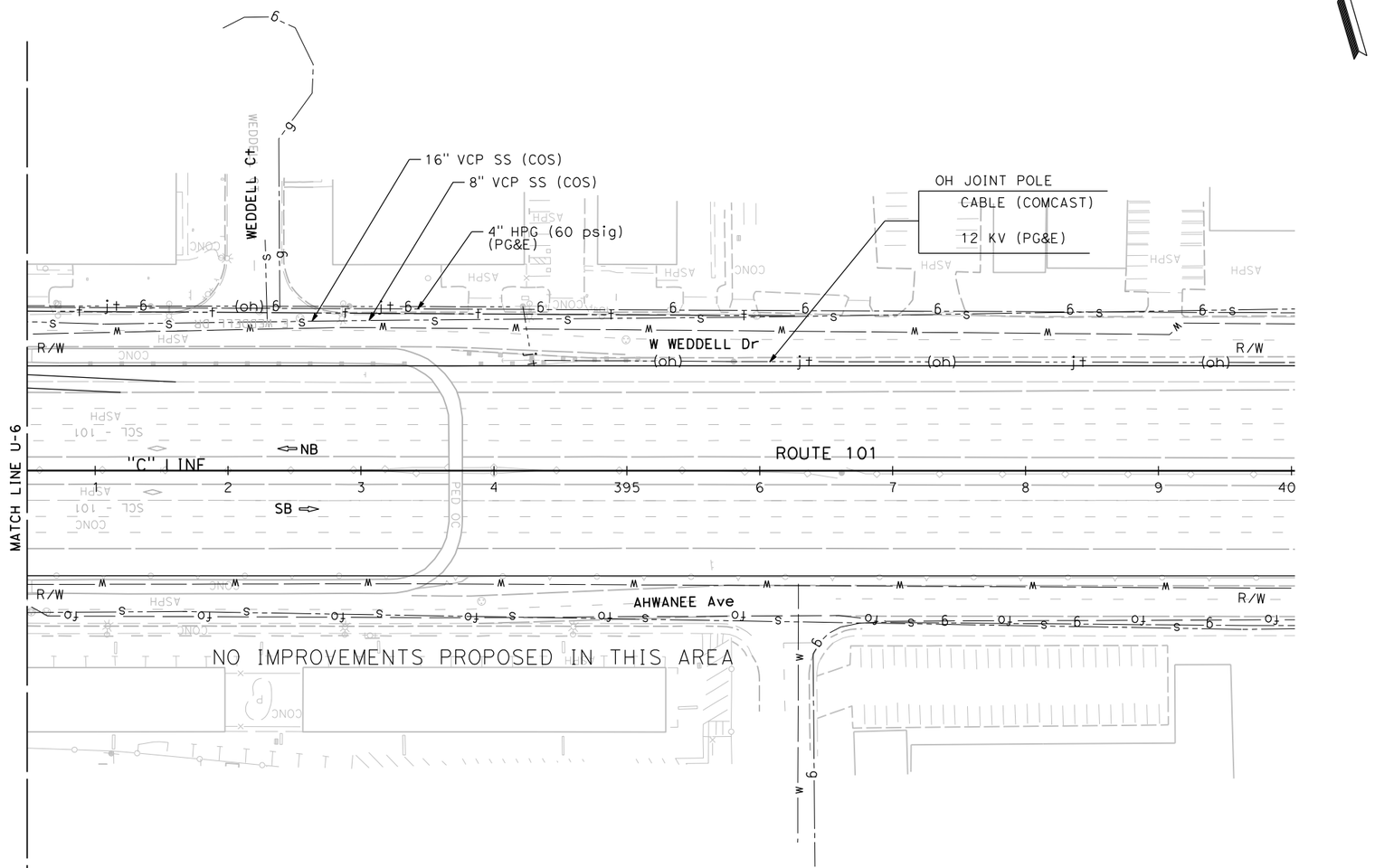

FOR NOTES AND LEGEND,
SEE SHEET U-1

APPROVED FOR UTILITY INFORMATION ONLY.

UTILITY PLAN

SCALE: 1" = 50'

U-7

CALCULATED-DESIGNED BY	RALEIGH JINKS			
CHECKED BY	STEVE LOUPE	DATE REVISED	05/03/18	
CONSULTANT FUNCTIONAL SUPERVISOR	TIMOTHY J. LEE	REVISED BY	SCV	

STATE OF CALIFORNIA - DEPARTMENT OF TRANSPORTATION — Caltrans®

LAST REVISION 01-15-18 | DATE PLOTTED => 6/20/2018 | TIME PLOTTED => 11:11:21 AM

X:\237_101_Mathilda\000_CAD\Sheets\KA-Utility\KA-Plans\0413000204ka007.dgn

BORDER LAST REVISED 7/2/2010 | USERNAME => Eilif | DGN FILE => 0413000204ka007.dgn | RELATIVE BORDER SCALE IS IN INCHES 0 1 2 3 | UNIT 0000 | PROJECT NUMBER & PHASE 0413000204

NOTE:
FOR ACCURATE RIGHT OF WAY DATA, CONTACT RIGHT OF WAY ENGINEERING AT THE DISTRICT OFFICE.

Dist	COUNTY	ROUTE	POST MILES TOTAL PROJECT	SHEET No.	TOTAL SHEETS
04	SCL	101,237	45.2/45.8, 2.7/3.3	155	736

REGISTERED CIVIL ENGINEER 6-13-18 DATE

6-20-18
PLANS APPROVAL DATE

REGISTERED PROFESSIONAL ENGINEER STEVE LOUPE No. 63575 Exp. 9/30/18 CIVIL STATE OF CALIFORNIA

THE STATE OF CALIFORNIA OR ITS OFFICERS OR AGENTS SHALL NOT BE RESPONSIBLE FOR THE ACCURACY OR COMPLETENESS OF SCANNED COPIES OF THIS PLAN SHEET.

WMH CORPORATION
50 W San Fernando St
Suite 950
San Jose, CA 95113

VTA
3331 N First St
Building B
San Jose, Ca 95134

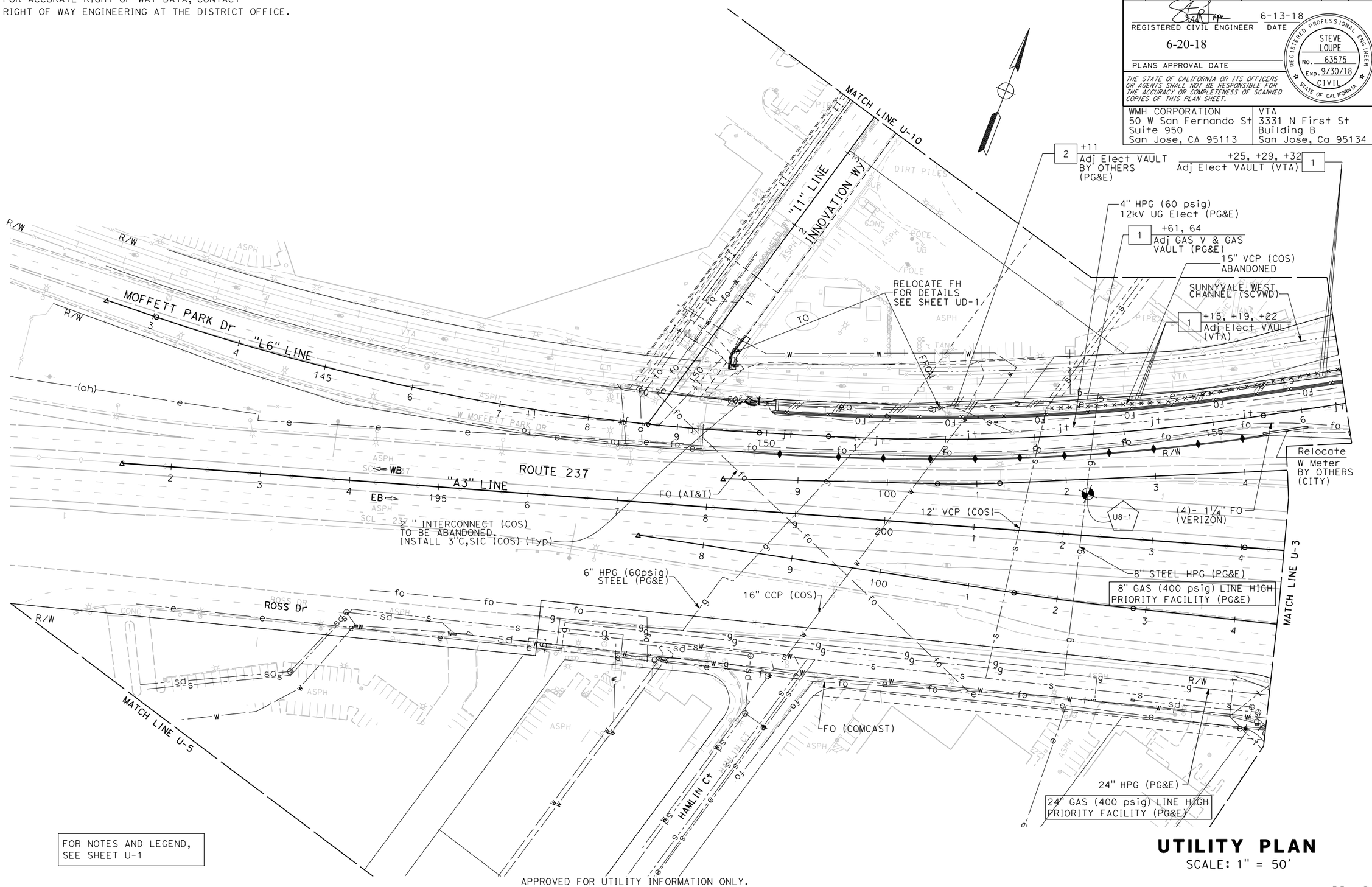

FOR NOTES AND LEGEND, SEE SHEET U-1

APPROVED FOR UTILITY INFORMATION ONLY.

UTILITY PLAN

SCALE: 1" = 50'

U-8

STATE OF CALIFORNIA - DEPARTMENT OF TRANSPORTATION
Caltrans

CONSULTANT FUNCTIONAL SUPERVISOR: TIMOTHY J. LEE
CALCULATED-DESIGNED BY: RALEIGH JINKS
CHECKED BY: STEVE LOUPE
REVISED BY: SCV
DATE REVISED: 05/03/18

X:\237_101_Mathilda\000_CAD\Sheets\KA-Utility\KA-Plans\0413000204ka008.dgn

LAST REVISION 01-15-18
DATE PLOTTED => 6/20/2018
TIME PLOTTED => 11:11:24 AM

BORDER LAST REVISED 7/2/2010
USERNAME => Eilif
DGN FILE => 0413000204ka008.dgn
RELATIVE BORDER SCALE IS IN INCHES 0 1 2 3
UNIT 0000
PROJECT NUMBER & PHASE 0413000204

NOTE:
FOR ACCURATE RIGHT OF WAY DATA, CONTACT RIGHT OF WAY ENGINEERING AT THE DISTRICT OFFICE.

Dist	COUNTY	ROUTE	POST MILES TOTAL PROJECT	SHEET No.	TOTAL SHEETS
04	SCL	101,237	45.2/45.8, 2.7/3.3	156	736

REGISTERED CIVIL ENGINEER 6-13-18 DATE

6-20-18
PLANS APPROVAL DATE

REGISTERED PROFESSIONAL ENGINEER STEVE LOUPE No. 63575 Exp. 9/30/18 CIVIL STATE OF CALIFORNIA

THE STATE OF CALIFORNIA OR ITS OFFICERS OR AGENTS SHALL NOT BE RESPONSIBLE FOR THE ACCURACY OR COMPLETENESS OF SCANNED COPIES OF THIS PLAN SHEET.

WMH CORPORATION
50 W San Fernando St
Suite 950
San Jose, CA 95113

VTA
3331 N First St
Building B
San Jose, Ca 95134

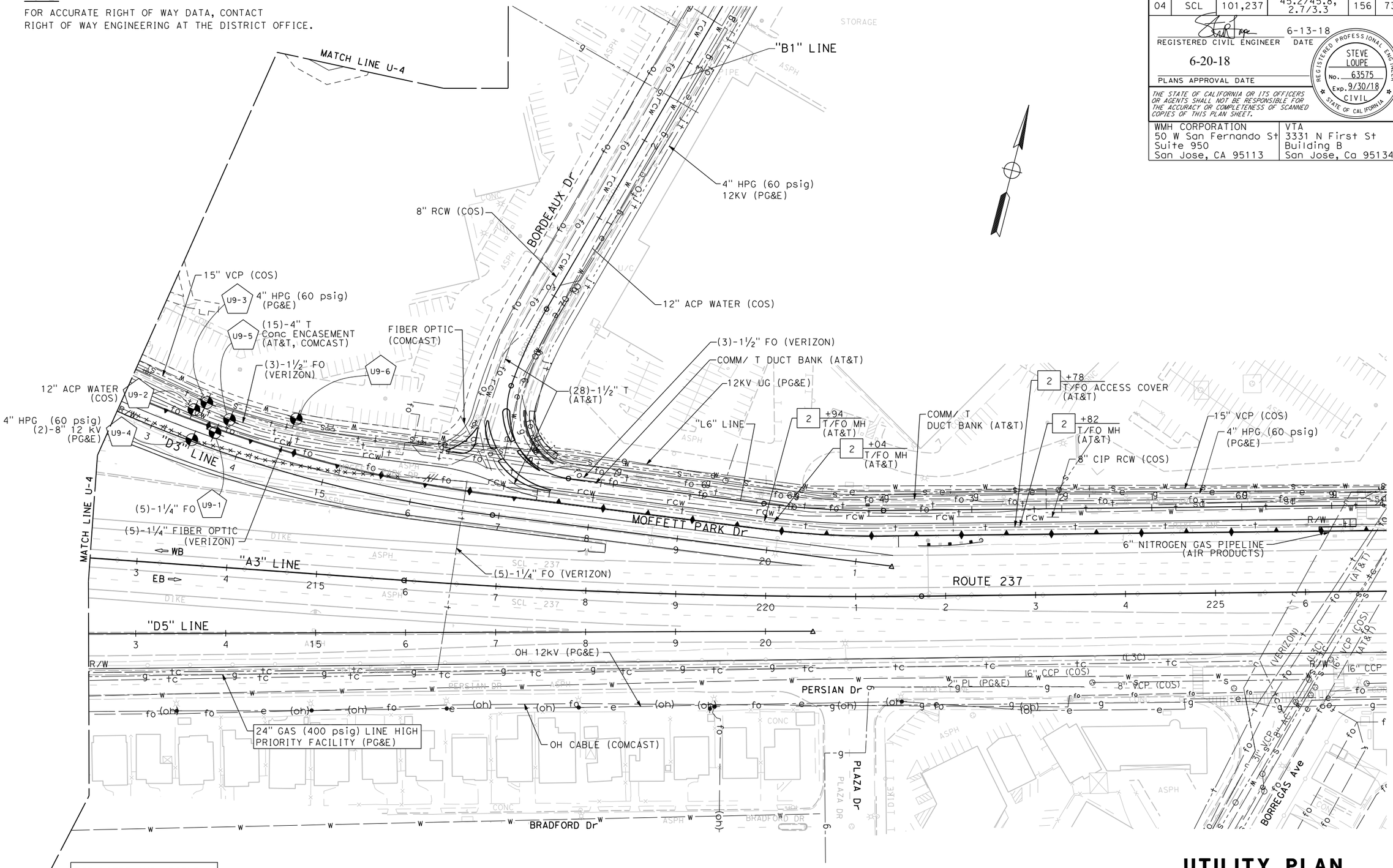

FOR NOTES AND LEGEND, SEE SHEET U-1

APPROVED FOR UTILITY INFORMATION ONLY.

UTILITY PLAN
SCALE: 1" = 50'

U-9

STATE OF CALIFORNIA - DEPARTMENT OF TRANSPORTATION
Caltrans

CONSULTANT FUNCTIONAL SUPERVISOR: TIMOTHY J. LEE
CALCULATED-DESIGNED BY: RALEIGH JINKS
CHECKED BY: STEVE LOUPE
REVISED BY: SCV
DATE REVISED: 05/03/18

X:\237_101_Mathilda\000_CAD\Sheets\KA-Utility\KA-Plans\0413000204ka009.dgn

LAST REVISION 01-15-18
DATE PLOTTED => 6/20/2018
TIME PLOTTED => 11:11:26 AM

NOTE:

FOR ACCURATE RIGHT OF WAY DATA, CONTACT
RIGHT OF WAY ENGINEERING AT THE DISTRICT OFFICE.

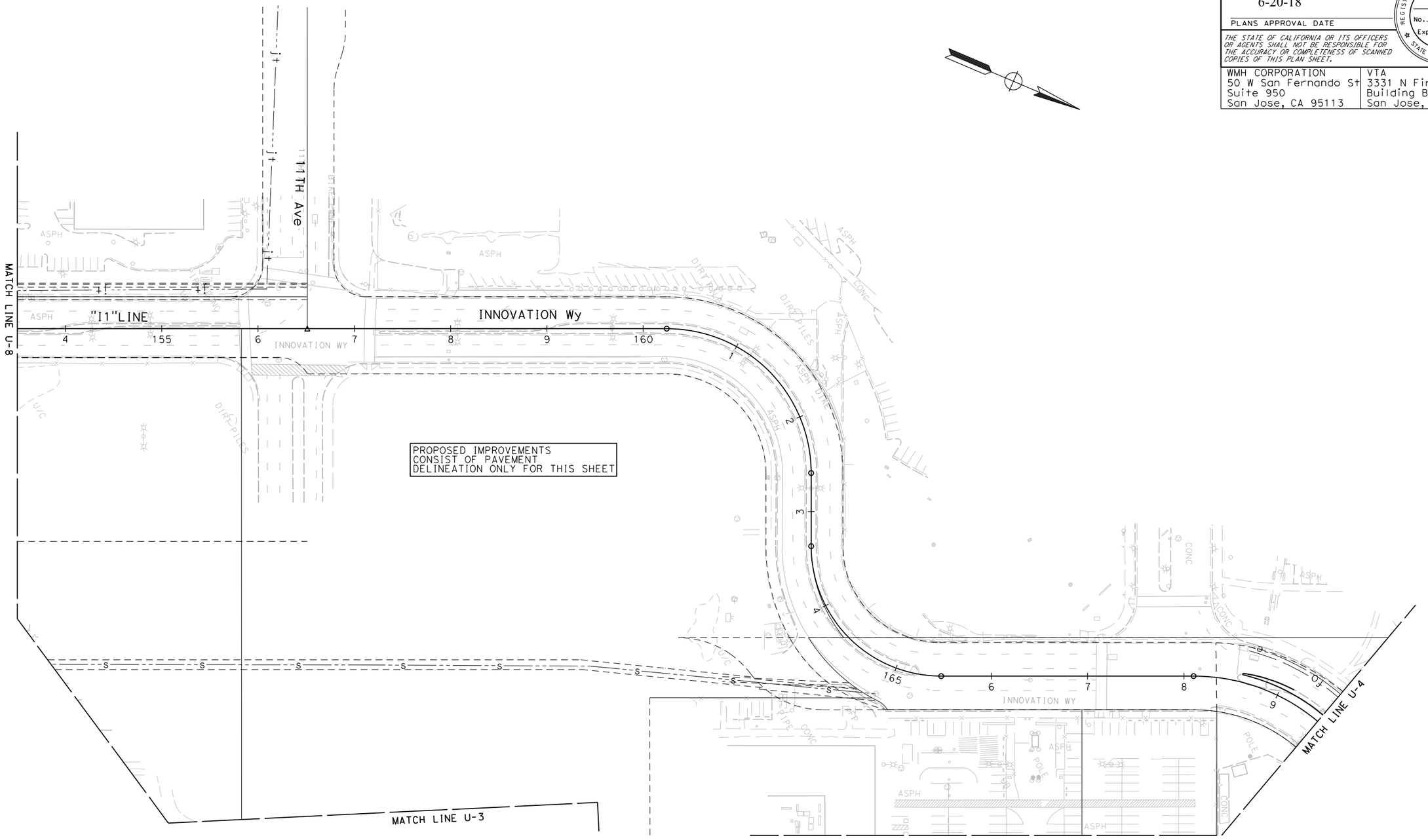

PROPOSED IMPROVEMENTS
CONSIST OF PAVEMENT
DELINEATION ONLY FOR THIS SHEET

FOR NOTES AND LEGEND,
SEE SHEET U-1

APPROVED FOR UTILITY INFORMATION ONLY.

UTILITY PLAN

SCALE: 1" = 50'

U-10

Dist	COUNTY	ROUTE	POST MILES TOTAL PROJECT	SHEET No.	TOTAL SHEETS
04	SCL	101,237	45.2/45.8, 2.7/3.3	157	736

6-13-18
REGISTERED CIVIL ENGINEER — DATE

6-20-18
PLANS APPROVAL DATE

REGISTERED PROFESSIONAL ENGINEER
STEVE LOUPE
No. 63575
Exp. 9/30/18
CIVIL
STATE OF CALIFORNIA

THE STATE OF CALIFORNIA OR ITS OFFICERS OR AGENTS SHALL NOT BE RESPONSIBLE FOR THE ACCURACY OR COMPLETENESS OF SCANNED COPIES OF THIS PLAN SHEET.

WMH CORPORATION
50 W San Fernando St
Suite 950
San Jose, CA 95113

VTA
3331 N First St
Building B
San Jose, Ca 95134

REVISED BY	DATE REVISED
SCV	05/03/18

CALCULATED-DESIGNED BY: RALEIGH JINKS
CHECKED BY: STEVE LOUPE
CONSULTANT FUNCTIONAL SUPERVISOR: TIMOTHY J. LEE

STATE OF CALIFORNIA - DEPARTMENT OF TRANSPORTATION
Caltrans

LAST REVISION 01-15-18
DATE PLOTTED => 6/20/2018
TIME PLOTTED => 11:11:29 AM

X:\237_101_Mathilda\000_CAD\Sheets\KA-Utility\KA-Plans\0413000204ka010.dgn

BORDER LAST REVISED 7/2/2010 | USERNAME => Eilif | DGN FILE => 0413000204ka010.dgn | RELATIVE BORDER SCALE IS IN INCHES 0 1 2 3 | UNIT 0000 | PROJECT NUMBER & PHASE 0413000204

Dist	COUNTY	ROUTE	POST MILES TOTAL PROJECT	SHEET No.	TOTAL SHEETS
04	SCL	101,237	45.2/45.8, 2.7/3.3	158	736

REGISTERED CIVIL ENGINEER — 6-13-18 DATE

6-20-18
PLANS APPROVAL DATE

REGISTERED PROFESSIONAL ENGINEER — STEVE LOUPE — No. 63575 — Exp. 9/30/18 — CIVIL — STATE OF CALIFORNIA

THE STATE OF CALIFORNIA OR ITS OFFICERS OR AGENTS SHALL NOT BE RESPONSIBLE FOR THE ACCURACY OR COMPLETENESS OF SCANNED COPIES OF THIS PLAN SHEET.

WMH CORPORATION
50 W San Fernando St
Suite 950
San Jose, CA 95113

VTA
3331 N First St
Building B
San Jose, Ca 95134

POSITIVE LOCATION INFORMATION

No. (#)	METHOD	UTILITY	OWNER	EASTING	NORTHING	GROUND ELEVATION (ft)	TOP OF PIPE ELEVATION (ft)	UTILITY DEPTH (ft)/ REMARKS
U1-1	PH	12kV ELECTRICAL LINE	PG&E	N/A	N/A	-		POTHOLE EXCAVATED TO A DEPTH OF 10' OVER USA ELECTRIC MARKING. NO UTILITIES WERE FOUND NOR ENCOUNTERED.
U1-2	PH/ EP	8" WATER	COS	6117671	1970128	37.4	33.4	4.0
U1-3	PH	12kV ELECTRICAL LINE	PG&E	6117707	1970141	37.1	35.0	2.1
U1-4	PH	2" HP GAS	HP GAS-PG&E	6117679	1970136	37.2	32.9	4.3
U1-5	PH	24" HP GAS/ COMM	PG&E/ VERIZON	6117730	1970219	36.4	32.3 GAS/ 33.1 COMM	4.1 GAS/ 3.3 COMM
U2-1	PH/ EP	4" HP GAS LINE	PG&E	N/A	N/A	-		7.0
U2-2	PH	72" WATER	SFPUC	6118175	1971819	29.2	23.9	5.3
U2-2A	PH	90" WATER	SFPUC	6118190	1971793	29.4	22.4	7.0
U3-1	PH	TELEPHONE/ COMM	VERIZON	6118243	1972357	22.9	19.5	3.3
U3-2	PH	JT 4" GAS/ 8" ELECTRICAL LINE	PG&E	6118399	1973209	22.3	18.5' GAS/ 17.5' ELECTRIC	3.8 GAS/ 4.8 ELECTRIC
U3-3	PH/ EP	TELEPHONE/ COMM	VERIZON	6118545	1973163	21.6	15.6	6.0
U3-4	PH	TELEPHONE/ COMM	VERIZON	N/A	N/A	-		POTHOLE NOT PERFORMED. UTILITY ELECTRONICALLY PROBED AT 42" DEEP
U3-5	PH	8" RECYCLED WATER	COS	N/A	N/A	-		NO USA RECYCLED WATER MARKINGS PRESENT. NO POTHOLE PERFORMED AT THIS LOCATION.
U3-6	PH	1" COMM	VERIZON	6118615	1973146	21.7	18.0	3.8
U3-7	PH	(2)-8" 12kV ELECTRICAL LINE	PG&E	6118562	1973199	21.0	17.0	4.0
U3-8	PH	JT 4" GAS/ (2)-8" ELECTRICAL LINE	PG&E	6118629	1973186	20.6	18' GAS/ 16.9' ELECTRIC	2.6 GAS/ 3.7 ELECTRIC
U3-9	PH	12" WATER	COS	6118629	1973206	22.5	15.8	6.7
U3-10	PH	(2)-1" COMM	VERIZON	6118652	1973222	-		3.8
U3-11	PH	24" HP GAS	PG&E	6118325	1972731	24.8	16.5	8.3
U3-12	PH	TELEPHONE/ COMM	VERIZON	6118335	1972737	24.2	20.2	4.0
U3-13	PH	16" WATER	COS	6118314	1972713	25.3	18.7	6.7
U3-14	PH	24" HP GAS	PG&E	6118107	1972685	26.1	17.5	8.7
U3-15	PH	16" WATER	COS	6118123	1972662	26.6	18.8	7.8
U6-1	PH	TELEPHONE/ COMM	VERIZON	6118341	1971541	30.8	27.4	3.4
U6-2	PH/ EP	COMM	VERIZON	6118536	1971253	-		12.0
U6-3	PH	4" HP GAS IN 8" CASING	PG&E	6118747	1971199	32.1	26.9	5.3
U8-1	EP	8" HP GAS	PG&E	6117665	1972777			11.2
U9-1	PH	TELEPHONE/ COMM	VERIZON	6118773	1973143	20.8	16.8	4.0
U9-2	PH	12" RECYCLED WATER	COS	6118744	1973162	20.3	17.0	3.3
U9-3	PH	4" HP GAS	PG&E	6118756	1973173	20.2	17.6	2.6
U9-4	PH	4" HP GAS/ (2)-8" 12kV ELECTRICAL LINE	PG&E	6118750	1973129	21.3	18.8 GAS/ 17.6 ELECTRIC	2.4 GAS/ 3.7 ELECTRIC
U9-5	PH	COMM	AT&T	6118785	1973161	19.8	17.1	2.8
U9-6	PH	12" WATER	COS	6118857	1973180	22.1	12.1	10.0

APPROVED FOR UTILITY INFORMATION ONLY.

UTILITY PLAN
SCALE: 1" = 50'

U-11

REVISED BY	DATE REVISED
SCV	05/03/18

RALEIGH JINKS — CALCULATED-DESIGNED BY
STEVE LOUPE — CHECKED BY
TIMOTHY J. LEE — CONSULTANT FUNCTIONAL SUPERVISOR
STATE OF CALIFORNIA - DEPARTMENT OF TRANSPORTATION — Caltrans

LAST REVISION 01-15-18
DATE PLOTTED => 6/20/2018
TIME PLOTTED => 11:11:31 AM

X:\237_101_Mathilda\000_CAD\Sheets\KA-Utility\KA-Plans\0413000204ka011.dgn

BORDER LAST REVISED 7/2/2010 | USERNAME => Eilif | DGN FILE => 0413000204ka011.dgn | RELATIVE BORDER SCALE IS IN INCHES 0 1 2 3 | UNIT 0000 | PROJECT NUMBER & PHASE 0413000204

Dist	COUNTY	ROUTE	POST MILES TOTAL PROJECT	SHEET No.	TOTAL SHEETS
04	SCL	101,237	45.2/45.8, 2.7/3.3	159	736

REGISTERED CIVIL ENGINEER — 6-13-18 DATE

6-20-18
PLANS APPROVAL DATE

REGISTERED PROFESSIONAL ENGINEER
STEVE LOUPE
No. 63575
Exp. 9/30/18
CIVIL
STATE OF CALIFORNIA

THE STATE OF CALIFORNIA OR ITS OFFICERS OR AGENTS SHALL NOT BE RESPONSIBLE FOR THE ACCURACY OR COMPLETENESS OF SCANNED COPIES OF THIS PLAN SHEET.

WMH CORPORATION
50 W San Fernando St
Suite 950
San Jose, CA 95113

VTA
3331 N First St
Building B
San Jose, Ca 95134

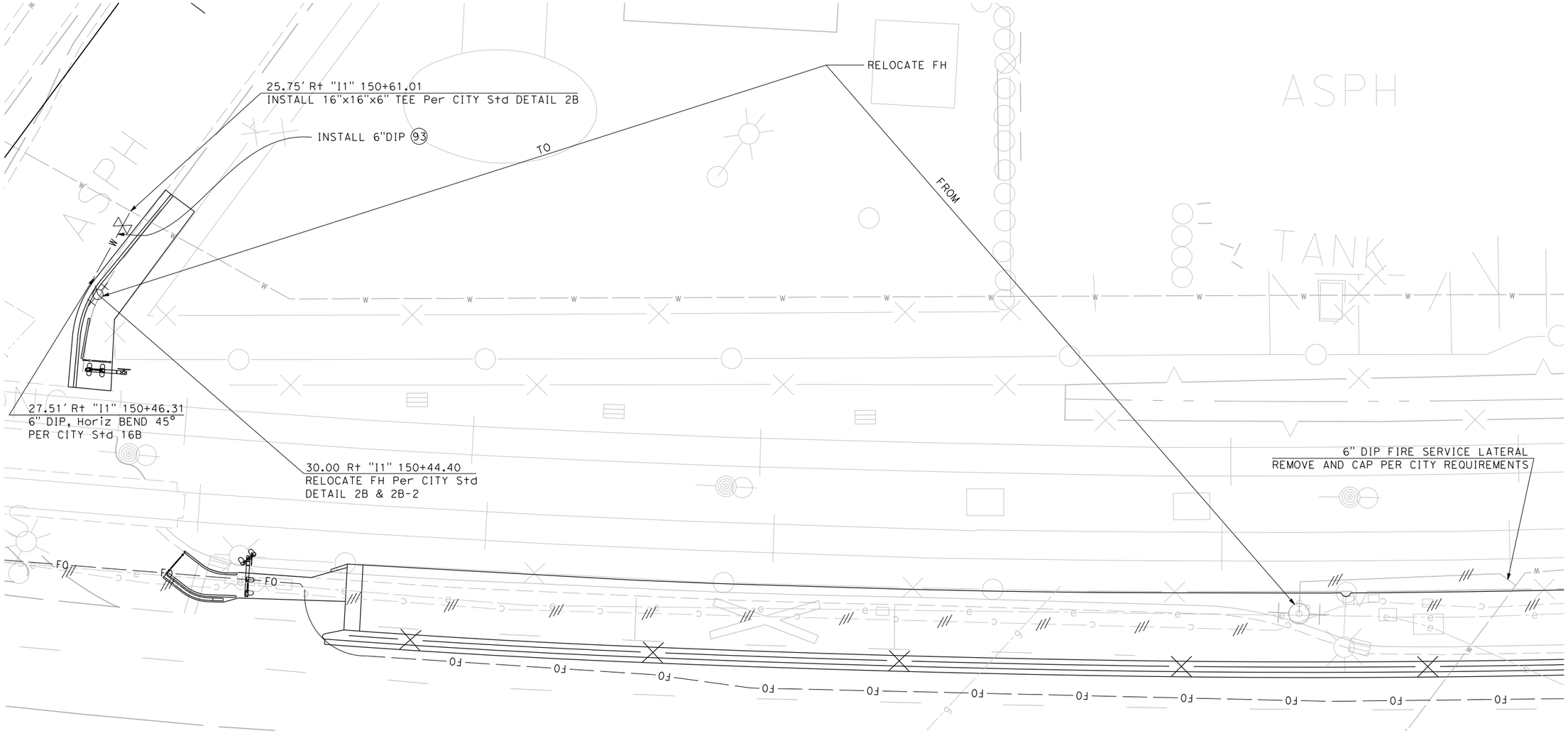

UTILITY DETAILS

SCALE 1" = 10'

UD-1

CALCULATED-DESIGNED BY	
CHECKED BY	
REVISED BY	SCV
DATE REVISED	05/03/18
SHAWN VOGTMAN	
STEVE LOUPE	
CONSULTANT FUNCTIONAL SUPERVISOR	TIMOTHY J. LEE
STATE OF CALIFORNIA - DEPARTMENT OF TRANSPORTATION	Caltrans

LAST REVISION 01-15-18
DATE PLOTTED => 6/20/2018
TIME PLOTTED => 11:11:25 AM

X:\237_101_Mathilde\000_CADSheets\KA-Utility\KB-Details\0413000204kb001.dgn

BORDER LAST REVISED 7/2/2010 | USERNAME => Eilif | DGN FILE => 0413000204kb001.dgn | RELATIVE BORDER SCALE IS IN INCHES 0 1 2 3 | UNIT 0000 | PROJECT NUMBER & PHASE 0413000204

Dist	COUNTY	ROUTE	POST MILES TOTAL PROJECT	SHEET No.	TOTAL SHEETS
04	SCL	101,237	45.2/45.8, 2.7/3.3	160	736

6-13-18
REGISTERED CIVIL ENGINEER DATE

6-20-18
PLANS APPROVAL DATE

REGISTERED PROFESSIONAL ENGINEER
STEVE LOUPE
No. 63575
Exp. 9/30/18
CIVIL
STATE OF CALIFORNIA

THE STATE OF CALIFORNIA OR ITS OFFICERS OR AGENTS SHALL NOT BE RESPONSIBLE FOR THE ACCURACY OR COMPLETENESS OF SCANNED COPIES OF THIS PLAN SHEET.

WMH CORPORATION 50 W San Fernando St Suite 950 San Jose, CA 95113	VTA 3331 N First St Building B San Jose, Ca 95134

HYDRANT LOCATION INFORMATION

HYDRANT LOCATIONS
REFER TO DETAIL 2B

③ HYDRANT REQUIREMENTS
CLOW/RICH NO. 75

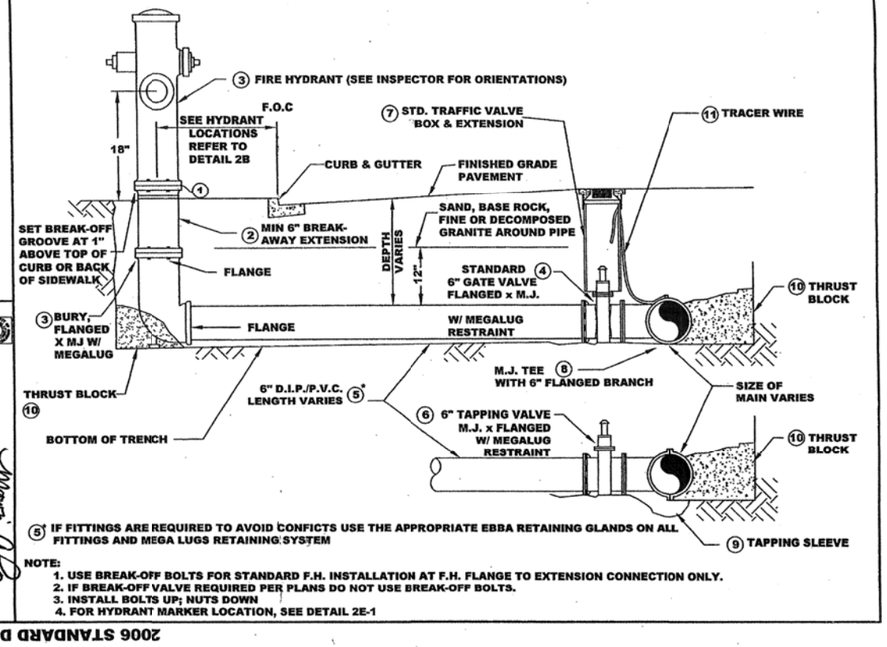

⑤ IF FITTINGS ARE REQUIRED TO AVOID CONFICTS USE THE APPROPRIATE EBBA RETAINING GLANDS ON ALL FITTINGS AND MEGA LUGS RETAINING SYSTEM

NOTE:
1. USE BREAK-OFF BOLTS FOR STANDARD F.H. INSTALLATION AT F.H. FLANGE TO EXTENSION CONNECTION ONLY.
2. IF BREAK-OFF VALVE REQUIRED PER PLANS DO NOT USE BREAK-OFF BOLTS.
3. INSTALL BOLTS UP; NUTS DOWN
4. FOR HYDRANT MARKER LOCATION, SEE DETAIL 2E-1

DATE REVISED : JUNE 30, 2006
DATE REVISED : JUNE, 2007
DWG. 2B-2
APPROVED BY:

2006 STANDARD DETAILS

FIRE HYDRANT ASSEMBLY

CURB DETAIL AT FIRE HYDRANT LOCATIONS

DATE REVISED: JUNE 30, 2006
REVISED: MAY 2015
DWG. 2B
APPROVED BY:

HYDRANT NOTES:
1. EXTRA WIDE MONOLITHIC SIDEWALK. X = 24" (FACE OF CURB TO CENTER OF HYDRANT) (Y DOES NOT APPLY) PROVIDED MIN CLEAR WIDTH BETWEEN BACK OF HYDRANT AND BACK OF WALK IS 4'-0"F. THIS MIN WIDTH CANNOT BE ACHIEVED, SEE NOTE 3.
2. NON MONOLITHIC SIDEWALK. X = 24" (FACE OF CURB TO CENTER OF HYDRANT) (Y DOES NOT APPLY)
3. MONOLITHIC SIDEWALK. Y = 12" (BACK OF SIDEWALK TO CENTER OF HYDRANT) (X DOES NOT APPLY)
4. NO SIDEWALK. X = 6'-6" (FACE OF CURB TO CENTER OF HYDRANT) (Y DOES NOT APPLY)
5. SEE DETAIL BELOW FOR THE INSTALLATION OF TRACER WIRE.

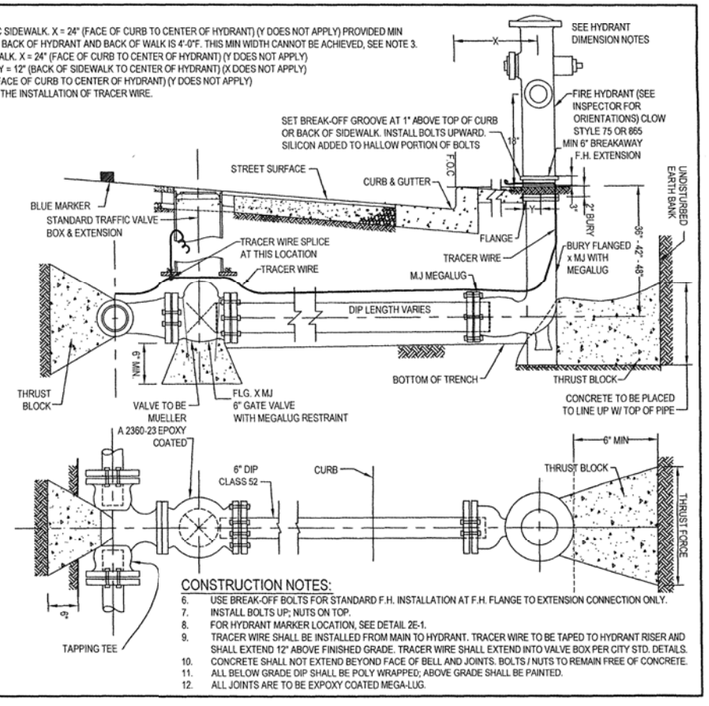

CONSTRUCTION NOTES:
6. USE BREAK-OFF BOLTS FOR STANDARD F.H. INSTALLATION AT F.H. FLANGE TO EXTENSION CONNECTION ONLY.
7. INSTALL BOLTS UP; NUTS ON TOP.
8. FOR HYDRANT MARKER LOCATION, SEE DETAIL 2E-1.
9. TRACER WIRE SHALL BE INSTALLED FROM MAIN TO HYDRANT. TRACER WIRE TO BE TAPED TO HYDRANT RISER AND SHALL EXTEND 12" ABOVE FINISHED GRADE. TRACER WIRE SHALL EXTEND INTO VALVE BOX PER CITY STD. DETAILS.
10. CONCRETE SHALL NOT EXTEND BEYOND FACE OF BELL AND JOINTS. BOLTS / NUTS TO REMAIN FREE OF CONCRETE.
11. ALL BELOW GRADE DIP SHALL BE POLY WRAPPED; ABOVE GRADE SHALL BE PAINTED.
12. ALL JOINTS ARE TO BE EXPOXY COATED MEGA-LUG.

UTILITY DETAILS
NO SCALE

UD-2

LAST REVISION: 01-15-18
DATE PLOTTED => 6/20/2018
TIME PLOTTED => 11:11:28 AM

CALCULATED-DESIGNED BY	SHAWN VOGTMAN	REVISED BY	SCV	
CHECKED BY	STEVE LOUPE	DATE REVISED	05/03/18	
CONSULTANT FUNCTIONAL SUPERVISOR	TIMOTHY J. LEE			

STATE OF CALIFORNIA - DEPARTMENT OF TRANSPORTATION

Gates & Gates®

X:\237_101_Mathilda\000_CAD\Sheets\KA-Utility\KB-Details\0413000204kb002.dgn

BORDER LAST REVISED 7/2/2010 | USERNAME => Eilif | DGN FILE => 0413000204kb002.dgn | RELATIVE BORDER SCALE IS IN INCHES 0 1 2 3 | UNIT 0000 | PROJECT NUMBER & PHASE 0413000204

Dist	COUNTY	ROUTE	POST MILES TOTAL PROJECT	SHEET No.	TOTAL SHEETS
04	SCL	101,237	45.2/45.8, 2.7/3.3	161	736

REGISTERED CIVIL ENGINEER 6-13-18 DATE

6-20-18
PLANS APPROVAL DATE

REGISTERED PROFESSIONAL ENGINEER STEVE LOUPE No. 63575 Exp. 9/30/18 CIVIL STATE OF CALIFORNIA

THE STATE OF CALIFORNIA OR ITS OFFICERS OR AGENTS SHALL NOT BE RESPONSIBLE FOR THE ACCURACY OR COMPLETENESS OF SCANNED COPIES OF THIS PLAN SHEET.

WMH CORPORATION
50 W San Fernando St
Suite 950
San Jose, CA 95113

VTA
3331 N First St
Building B
San Jose, Ca 95134

INSTALLATION OF CUT - IN TEE AND GATE VALVE

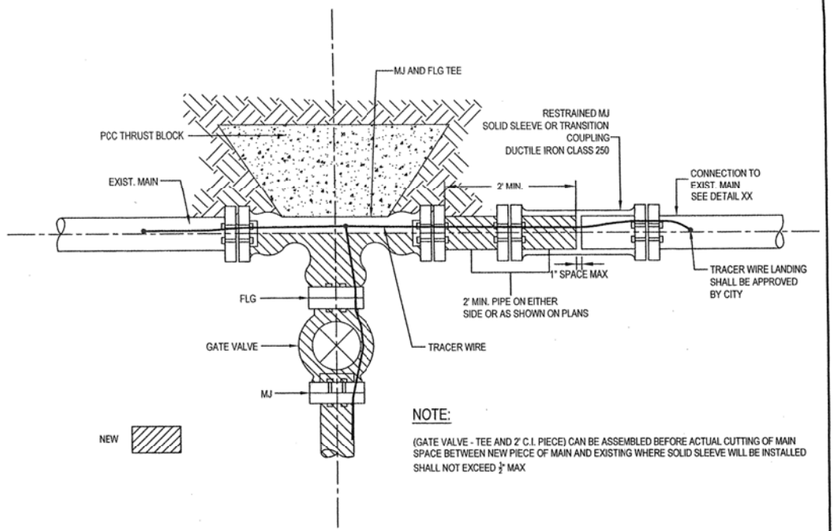

NOTE:

(GATE VALVE - TEE AND 2' C.I. PIECE) CAN BE ASSEMBLED BEFORE ACTUAL CUTTING OF MAIN SPACE BETWEEN NEW PIECE OF MAIN AND EXISTING WHERE SOLID SLEEVE WILL BE INSTALLED SHALL NOT EXCEED ½" MAX

ABBREVIATIONS:

FLG	FLANGE
MJ	MECHANICAL JOINT
PE	PLAIN END

DATE : JUNE 30, 2006
REVISED: SEPTEMBER 2014
APPROVED BY:
15B

THRUST BLOCK FOR HORIZONTAL BENDS

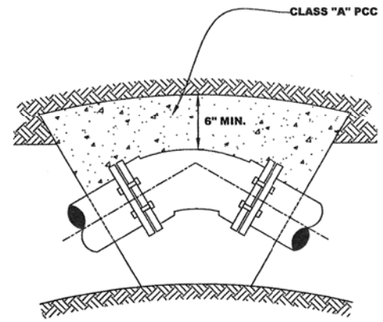

PLAN

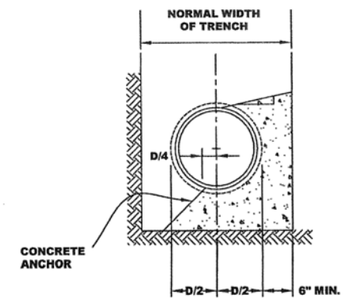

SECTION

NOTES:

1. D = PIPE DIAMETER
2. WRAP FLANGES/BOLTS IN VISQUEEN

DATE: JUNE 30, 2006
DWG.
APPROVED BY:
16B

2006 STANDARD DETAILS

UTILITY DETAILS

NO SCALE

UD-3

STATE OF CALIFORNIA - DEPARTMENT OF TRANSPORTATION
Caltrans
CONSULTANT FUNCTIONAL SUPERVISOR: TIMOTHY J. LEE
CALCULATED-DESIGNED BY: SHAWN VOGTMAN
CHECKED BY: STEVE LOUPE
REVISED BY: SCV
DATE REVISED: 05/03/18

X:\237_101_Mathilda\000_CAD\Sheets\KA-Utility\KB-Details\0413000204kb003.dgn

LAST REVISION 01-15-18
DATE PLOTTED => 6/20/2018
TIME PLOTTED => 11:11:59 AM

Dist	COUNTY	ROUTE	POST MILES TOTAL PROJECT	SHEET No.	TOTAL SHEETS
04	SCL	101,237	45.2/45.8, 2.7/3.3	162	736

REGISTERED CIVIL ENGINEER — 6-13-18 DATE

6-20-18
PLANS APPROVAL DATE

REGISTERED PROFESSIONAL ENGINEER — STEVE LOUPE — No. 63575 — Exp. 9/30/18 — CIVIL — STATE OF CALIFORNIA

THE STATE OF CALIFORNIA OR ITS OFFICERS OR AGENTS SHALL NOT BE RESPONSIBLE FOR THE ACCURACY OR COMPLETENESS OF SCANNED COPIES OF THIS PLAN SHEET.

WMH CORPORATION
50 W San Fernando St
Suite 950
San Jose, CA 95113

VTA
3331 N First St
Building B
San Jose, Ca 95134

UTILITY QUANTITIES

LOCATION	RELOCATE FIRE HYDRANT ASSEMBLY	REMOVE PIPE	INSTALL 6" DUCTILE IRON PIPE	ADJUST SEWER MANHOLE	ADJUST UTILITY COVER TO GRADE BY CONTRACTOR	ADJUST VALVE BOX FRAME AND COVER TO GRADE BY CONTRACTOR	ADJUST UTILITY COVER TO GRADE BY OTHERS (N)	REMARK/OWNER
	EA	LF	LF	EA	EA	EA	EA	
64.09′ Rt "M1" 29+82.23						1		CITY OF SUNNYVALE
69.00′ Rt "M1" 30+09.78						1		CITY OF SUNNYVALE
68.88′ Rt "M1" 56+28.54						1		CITY OF SUNNYVALE
27.17′ Rt "D5a" 08+21.25						1		CITY OF SUNNYVALE
29.33′ Rt "D5a" 08+36.04						1		CITY OF SUNNYVALE
72.60′ Rt "M1" 56+58.00						1		PG&E
46.25′ Rt "M1" 60+43.29		43						CITY OF SUNNYVALE
61.30′ Rt "M1" 61+60.46						3		CITY OF SUNNYVALE
30.00′ Rt "I1" 150+44.40	1		18					CITY OF SUNNYVALE
35.26′ Lt "L6" 151+93.33		48						CITY OF SUNNYVALE
35.15′ Lt "L6" 152+10.75							1	PG&E
37.72′ Lt "L6" 153+60.77						1		PG&E
37.67′ Lt "L6" 153+63.82					1			PG&E
34.03′ Lt "L6" 154+15.47					1			VTA
34.18′ Lt "L6" 154+18.63					1			VTA
34.37′ Lt "L6" 154+21.70					1			VTA
32.97′ Lt "L6" 156+25.15					1			VTA
33.04′ Lt "L6" 156+28.85					1			VTA
33.09′ Lt "L6" 156+32.45					1			VTA
28.69′ Lt "L6" 158+23.70					1			PG&E
28.81′ Lt "L6" 159+56.15							1	PG&E
43.97′ Lt "L6" 160+82.63				1				CITY OF SUNNYVALE
30.90′ Lt "D3" 19+93.69							1	AT&T
31.42′ Lt "D3" 20+03.99							1	AT&T
76.00′ Lt "A3" 222+77.94							1	AT&T
76.19′ Lt "A3" 222+82.27							1	AT&T
TOTAL	1	91	18	1	8	10	6	

(N) - NOT A SEPARATE PAY ITEM, FOR INFORMATION ONLY.

UTILITY QUANTITIES

UQ-1

REVISED BY	DATE REVISED
SCV	05/03/18

CALCULATED-DESIGNED BY: SHAWN VOGTMAN
CHECKED BY: STEVE LOUPE
SUPERVISOR: TIMOTHY J. LEE
CONSULTANT FUNCTIONAL SUPERVISOR

STATE OF CALIFORNIA - DEPARTMENT OF TRANSPORTATION
Caltrans

X:\237_101_Mathilde\000_CAD\Sheets\KA-Utility\KC-Quantities\0413000204kc001.dgn

LAST REVISION 01-15-18
DATE PLOTTED => 6/20/2018
TIME PLOTTED => 11:11:55 AM

BORDER LAST REVISED 7/2/2010 | USERNAME => Eilif | DGN FILE => 0413000204kc001.dgn | RELATIVE BORDER SCALE IS IN INCHES 0 1 2 3 | UNIT 0000 | PROJECT NUMBER & PHASE 0413000204

Dist	COUNTY	ROUTE	POST MILES TOTAL PROJECT	SHEET No.	TOTAL SHEETS
04	SCL	101,237	45.2/45.8, 2.7/3.3	163	736

6-13-18
REGISTERED CIVIL ENGINEER DATE

6-20-18
PLANS APPROVAL DATE

REGISTERED PROFESSIONAL ENGINEER — STEVE LOUPE — No. 63575 — Exp. 9/30/18 — CIVIL — STATE OF CALIFORNIA

THE STATE OF CALIFORNIA OR ITS OFFICERS OR AGENTS SHALL NOT BE RESPONSIBLE FOR THE ACCURACY OR COMPLETENESS OF SCANNED COPIES OF THIS PLAN SHEET.

WMH CORPORATION
50 W San Fernando St
Suite 950
San Jose, CA 95113

VTA
3331 N First St
Building B
San Jose, Ca 95134

NOTES:

1. LOCATION OF CONSTRUCTION AREA SIGNS ARE APPROXIMATE. EXACT LOCATIONS WILL BE DETERMINED BY THE ENGINEER.
2. COVER AND UNCOVER PERMANENT AND CONSTRUCTION AREA SIGN PANELS AS DIRECTED BY THE ENGINEER TO AVOID MESSAGE CONFLICTS.
3. ADVANCE INFORMATION SIGNS TO BE INSTALLED FOURTEEN (14) DAYS PRIOR TO CLOSURE.
4. FOR ADDITIONAL CONSTRUCTION AREA SIGNS, SEE MOTORIST INFORMATION (MI) AND TRAFFIC HANDLING PLANS (TH).
5. FEDERAL SIGN CODES ARE SHOWN UNLESS DESIGNATED BY <CA> WHICH INDICATES A CALIFORNIA SIGN CODE.

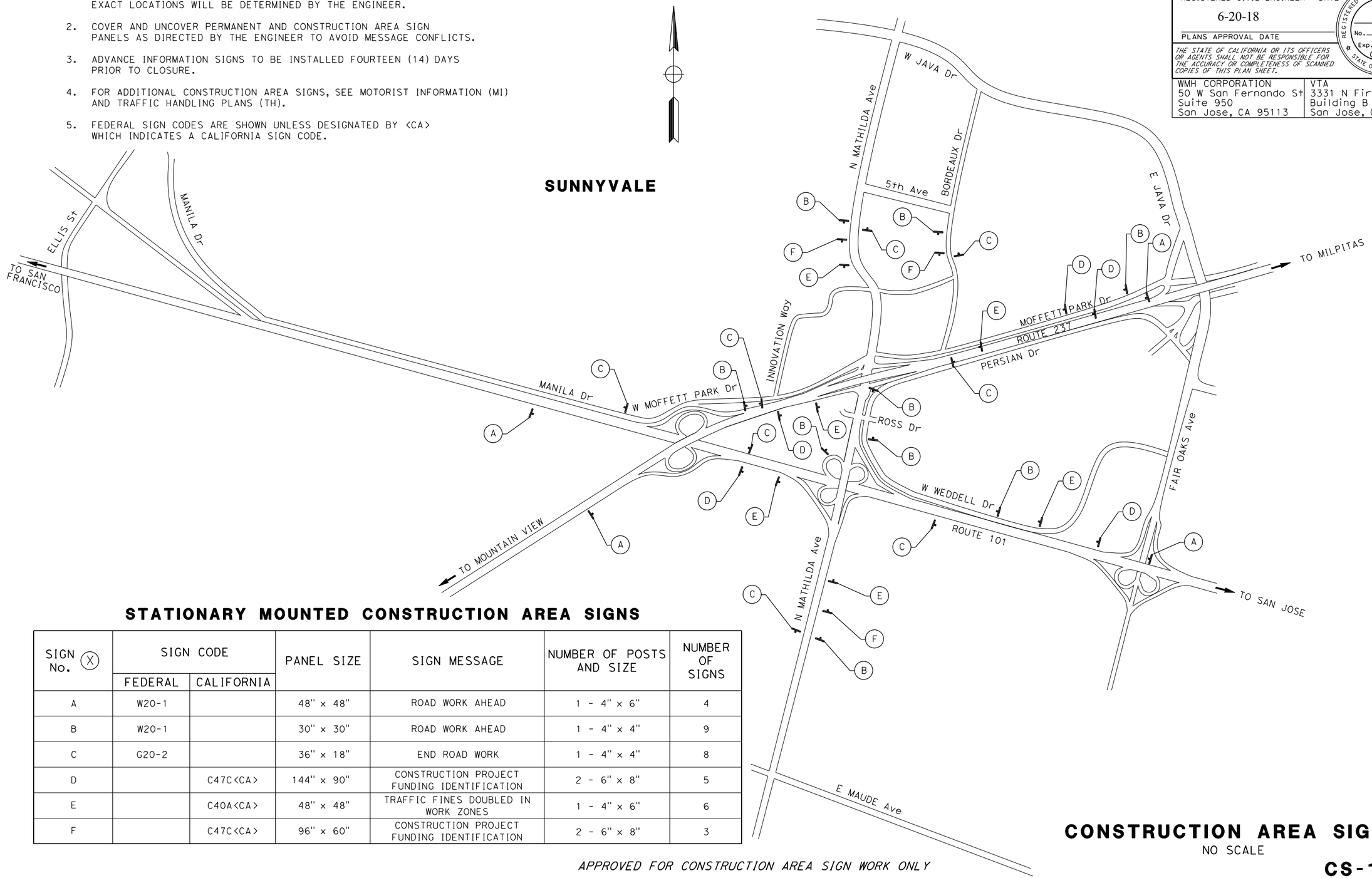

STATIONARY MOUNTED CONSTRUCTION AREA SIGNS

SIGN No. (X)	SIGN CODE		PANEL SIZE	SIGN MESSAGE	NUMBER OF POSTS AND SIZE	NUMBER OF SIGNS
	FEDERAL	CALIFORNIA				
A	W20-1		48" x 48"	ROAD WORK AHEAD	1 - 4" x 6"	4
B	W20-1		30" x 30"	ROAD WORK AHEAD	1 - 4" x 4"	9
C	G20-2		36" x 18"	END ROAD WORK	1 - 4" x 4"	8
D		C47C<CA>	144" x 90"	CONSTRUCTION PROJECT FUNDING IDENTIFICATION	2 - 6" x 8"	5
E		C40A<CA>	48" x 48"	TRAFFIC FINES DOUBLED IN WORK ZONES	1 - 4" x 6"	6
F		C47C<CA>	96" x 60"	CONSTRUCTION PROJECT FUNDING IDENTIFICATION	2 - 6" x 8"	3

APPROVED FOR CONSTRUCTION AREA SIGN WORK ONLY

CONSTRUCTION AREA SIGNS

NO SCALE

CS-1

CALCULATED-DESIGNED BY	SHAWN VOGTMAN	REVISED BY	SCV
CHECKED BY	KEVIN AZARMI	DATE REVISED	05/03/18
CONSULTANT FUNCTIONAL SUPERVISOR	TIMOTHY J. LEE		

STATE OF CALIFORNIA - DEPARTMENT OF TRANSPORTATION

Caltrans

LAST REVISION | DATE PLOTTED => 7/3/2018
01-15-18 | TIME PLOTTED => 2:16:48 PM

X:\237_101_Mathilda\000_CAD\Sheets\LA-Const_Area_Signs\0413000204la001.dgn

BORDER LAST REVISED 7/2/2010 | USERNAME => Dianneg | DGN FILE => 0413000204la001.dgn | RELATIVE BORDER SCALE IS IN INCHES 0 1 2 3 | UNIT 0000 | PROJECT NUMBER & PHASE 0413000204

Dist	COUNTY	ROUTE	POST MILES TOTAL PROJECT	SHEET No.	TOTAL SHEETS
04	SCL	101,237	45.2/45.8, 2.7/3.3	164	736

REGISTERED CIVIL ENGINEER 6-13-18 DATE

6-20-18
PLANS APPROVAL DATE

REGISTERED PROFESSIONAL ENGINEER STEVE LOUPE No. 63575 Exp. 9/30/18 CIVIL STATE OF CALIFORNIA

THE STATE OF CALIFORNIA OR ITS OFFICERS OR AGENTS SHALL NOT BE RESPONSIBLE FOR THE ACCURACY OR COMPLETENESS OF SCANNED COPIES OF THIS PLAN SHEET.

WMH CORPORATION
50 W San Fernando St
Suite 950
San Jose, CA 95113

VTA
3331 N First St
Building B
San Jose, Ca 95134

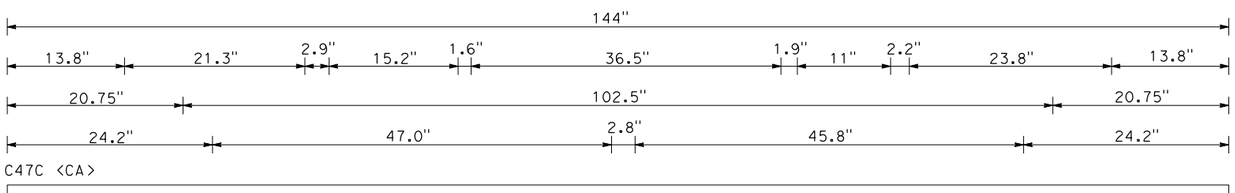

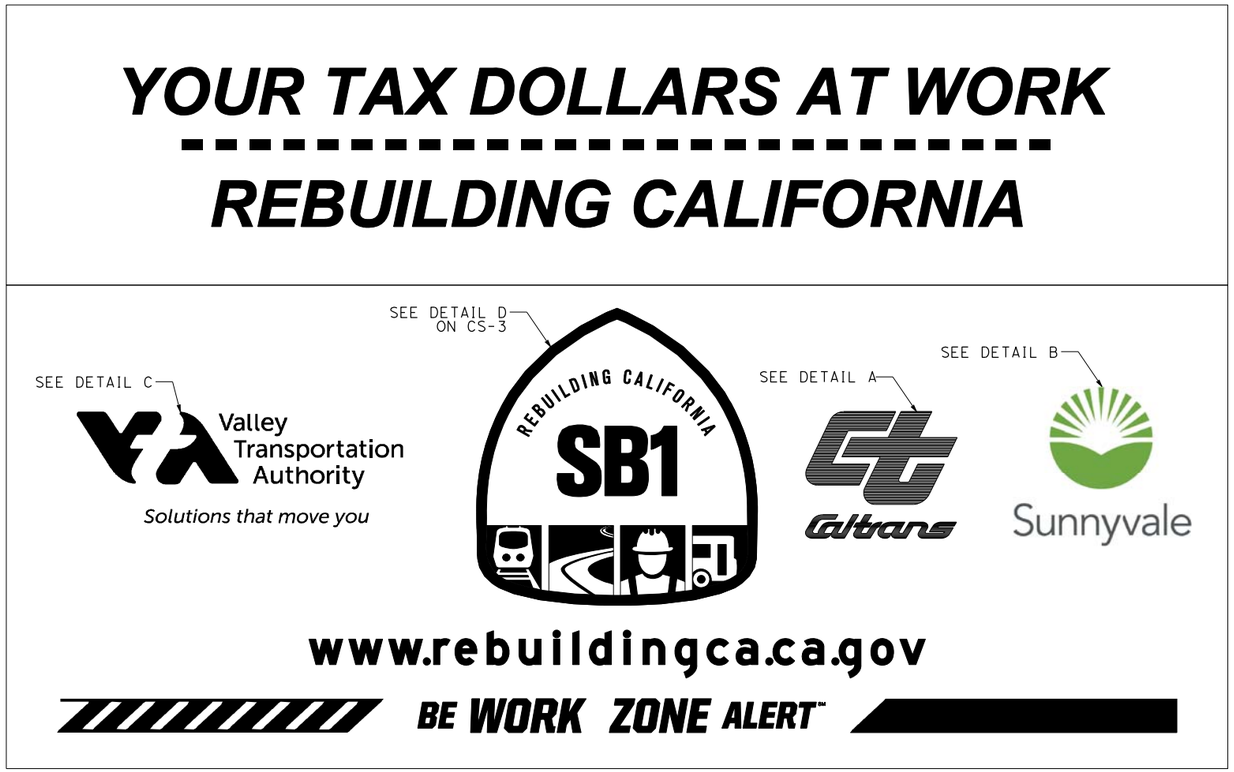

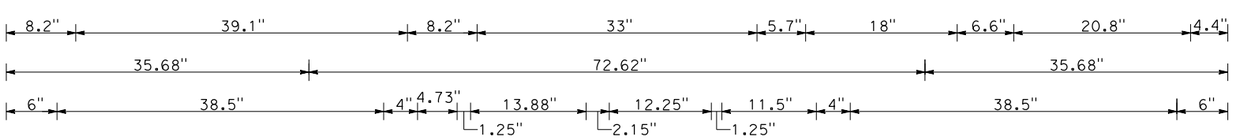

NO BORDER, WHITE ON BLUE (PANTONE #299);
[YOUR TAX DOLLARS AT WORK] ARIAL BOLD ITALIC; [REBUILDING CALIFORNIA] ARIAL BOLD ITALIC;
NO BORDER, BLACK ON WHITE;
[www.rebuildingca.ca.gov] E Mod 97% SPACING;
BE WORK ZONE ALERT RIBBON: ORANGE, WHITE AND BLUE (PANTONE #137 ORANGE, #299 BLUE)
SENATE BILL 1 LOGO: (SEE DETAIL ON CS -3)
BROWN (C 80%, M 80%, Y 80%, K 20%), LIGHT CREAM (C 0%, M 2%, Y 7%, K 0%)
BLUE (C 75%, M 23%, Y 1%, K 0%), GREEN (C 90%, M 20%, Y 80%, 0%)
YELLOW GOLD (C 0%, M 38%, Y 85%, K 4%), RED (C 16%, M 84%, Y 65%, K 3%)

PROJECT INFORMATION SIGN

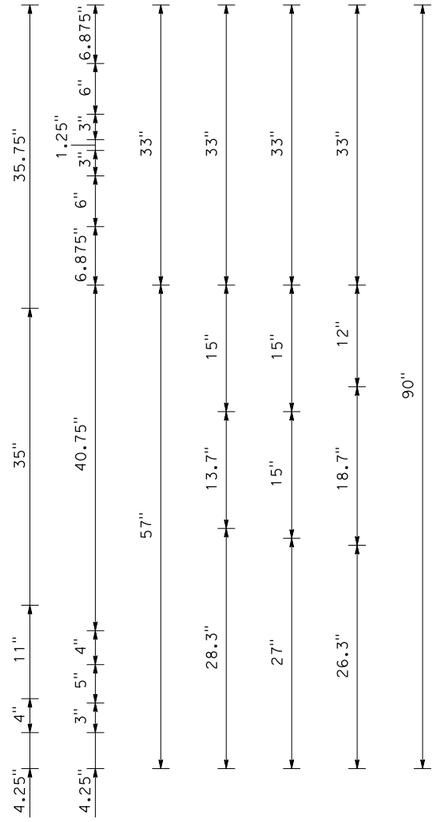

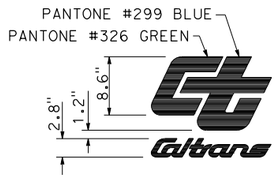

DETAIL A

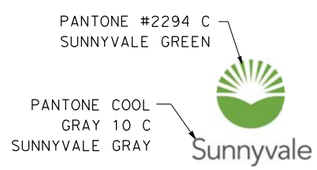

DETAIL B

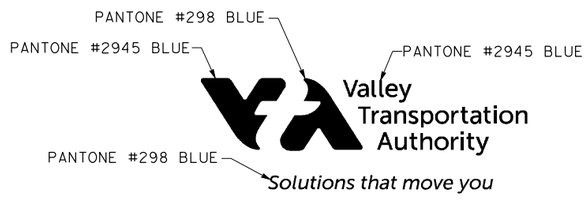

DETAIL C

APPROVED FOR CONSTRUCTION AREA SIGN WORK ONLY

CONSTRUCTION AREA SIGNS

NO SCALE

CS-2

STATE OF CALIFORNIA - DEPARTMENT OF TRANSPORTATION
Caltrans

CONSULTANT FUNCTIONAL SUPERVISOR: TIMOTHY J. LEE
CALCULATED-DESIGNED BY: SHAWN VOGTMAN
CHECKED BY: KEVIN AZARMI
REVISED BY: SCV
DATE REVISED: 05/03/18

X:\237_101_Mathilda\000_CAD\Sheets\LA-Const_Area_Signs\0413000204la002.dgn

LAST REVISION 01-15-18
DATE PLOTTED => 7/3/2018
TIME PLOTTED => 2:16:50 PM

Dist	COUNTY	ROUTE	POST MILES TOTAL PROJECT	SHEET No.	TOTAL SHEETS
04	SCL	101,237	45.2/45.8, 2.7/3.3	165	736

REGISTERED CIVIL ENGINEER — 6-13-18 DATE

6-20-18
PLANS APPROVAL DATE

REGISTERED PROFESSIONAL ENGINEER — STEVE LOUPE — No. 63575 — Exp. 9/30/18 — CIVIL — STATE OF CALIFORNIA

THE STATE OF CALIFORNIA OR ITS OFFICERS OR AGENTS SHALL NOT BE RESPONSIBLE FOR THE ACCURACY OR COMPLETENESS OF SCANNED COPIES OF THIS PLAN SHEET.

WMH CORPORATION
50 W San Fernando St
Suite 950
San Jose, CA 95113

VTA
3331 N First St
Building B
San Jose, Ca 95134

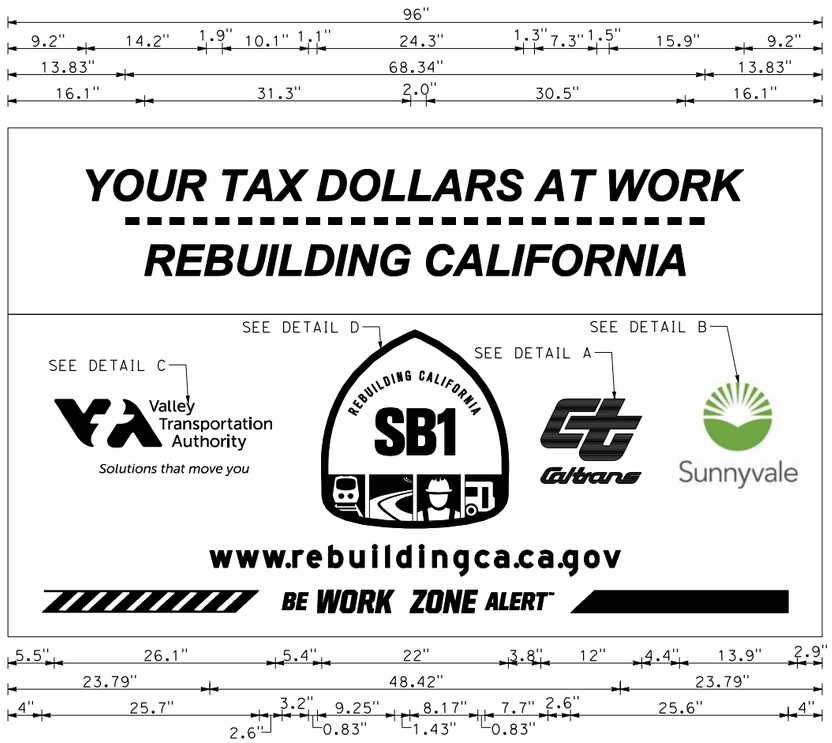

NO BORDER, WHITE ON BLUE (PANTONE #299);
[YOUR TAX DOLLARS AT WORK] ARIAL BOLD ITALIC; [REBUILDING CALIFORNIA] ARIAL BOLD ITALIC;
NO BORDER, BLACK ON WHITE;
[www.rebuildingca.ca.gov] E Mod 97% SPACING;
BE WORK ZONE ALERT RIBBON: ORANGE, WHITE AND BLUE (PANTONE #137 ORANGE, #299 BLUE)

PROJECT INFORMATION SIGN

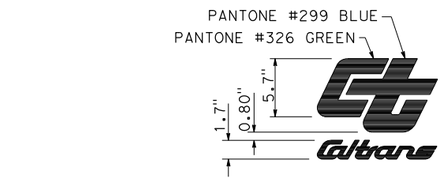

DETAIL A

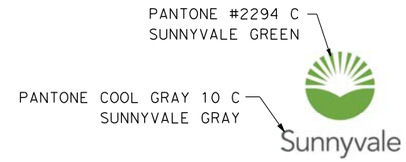

DETAIL B

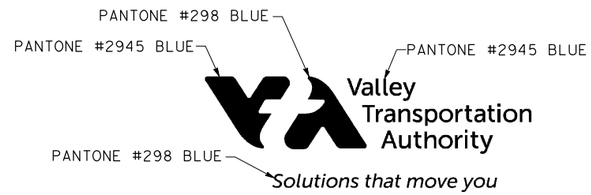

DETAIL C

DETAIL D

APPROVED FOR CONSTRUCTION AREA SIGN WORK ONLY

CONSTRUCTION AREA SIGNS

NO SCALE

CS-3

CALCULATED-DESIGNED BY	SHAWN VOGTMAN	REVISED BY	SCV		
CHECKED BY	KEVIN AZARMI	DATE REVISED	05/03/18		
SUPERVISOR	TIMOTHY J. LEE				
STATE OF CALIFORNIA - DEPARTMENT OF TRANSPORTATION	CONSULTANT FUNCTIONAL				

X:\237_101_Mathilda\000_CAD\Sheets\LA-Const Area_Signs\0413000204la003.dgn

LAST REVISION 01-15-18 | DATE PLOTTED => 7/3/2018 | TIME PLOTTED => 2:16:51 PM

BORDER LAST REVISED 7/2/2010 | USERNAME => Dianneg | DGN FILE => 0413000204la003.dgn | RELATIVE BORDER SCALE IS IN INCHES 0 1 2 3 | UNIT 0000 | PROJECT NUMBER & PHASE 0413000204

Dist	COUNTY	ROUTE	POST MILES TOTAL PROJECT	SHEET No.	TOTAL SHEETS
04	SCL	101,237	45.2/45.8, 2.7/3.3	166	736

REGISTERED CIVIL ENGINEER 6-13-18 DATE

6-20-18
PLANS APPROVAL DATE

REGISTERED PROFESSIONAL ENGINEER STEVE LOUPE No. 63575 Exp. 9/30/18 CIVIL STATE OF CALIFORNIA

THE STATE OF CALIFORNIA OR ITS OFFICERS OR AGENTS SHALL NOT BE RESPONSIBLE FOR THE ACCURACY OR COMPLETENESS OF SCANNED COPIES OF THIS PLAN SHEET.

WMH CORPORATION
50 W San Fernando St
Suite 950
San Jose, CA 95113

VTA
3331 N First St
Building B
San Jose, Ca 95134

NOTES:

1. LOCATION OF CONSTRUCTION AREA SIGNS ARE APPROXIMATE. EXACT LOCATIONS WILL BE DETERMINED BY THE ENGINEER.
2. COVER AND UNCOVER PERMANENT AND CONSTRUCTION AREA SIGN PANELS AS DIRECTED BY THE ENGINEER TO AVOID MESSAGE CONFLICTS.
3. ADVANCE INFORMATION SIGNS TO BE INSTALLED FOURTEEN (14) DAYS PRIOR TO CLOSURE.
4. FOR ADDITIONAL CONSTRUCTION AREA SIGNS, SEE CONSTRUCTION AREA SIGNS (CS), STAGE CONSTRUCTION (SC) AND TRAFFIC HANDLING PLANS (TH).
5. SEE MI-9 FOR SPECIAL (Spec) SIGN MESSAGES.
6. FEDERAL SIGN CODES ARE SHOWN UNLESS DESIGNATED BY <CA> WHICH INDICATES A CALIFORNIA SIGN CODE.
7. FOR EACH STAGE AND PHASE, ONLY ONE RAMP MAY BE CLOSED AT A TIME.

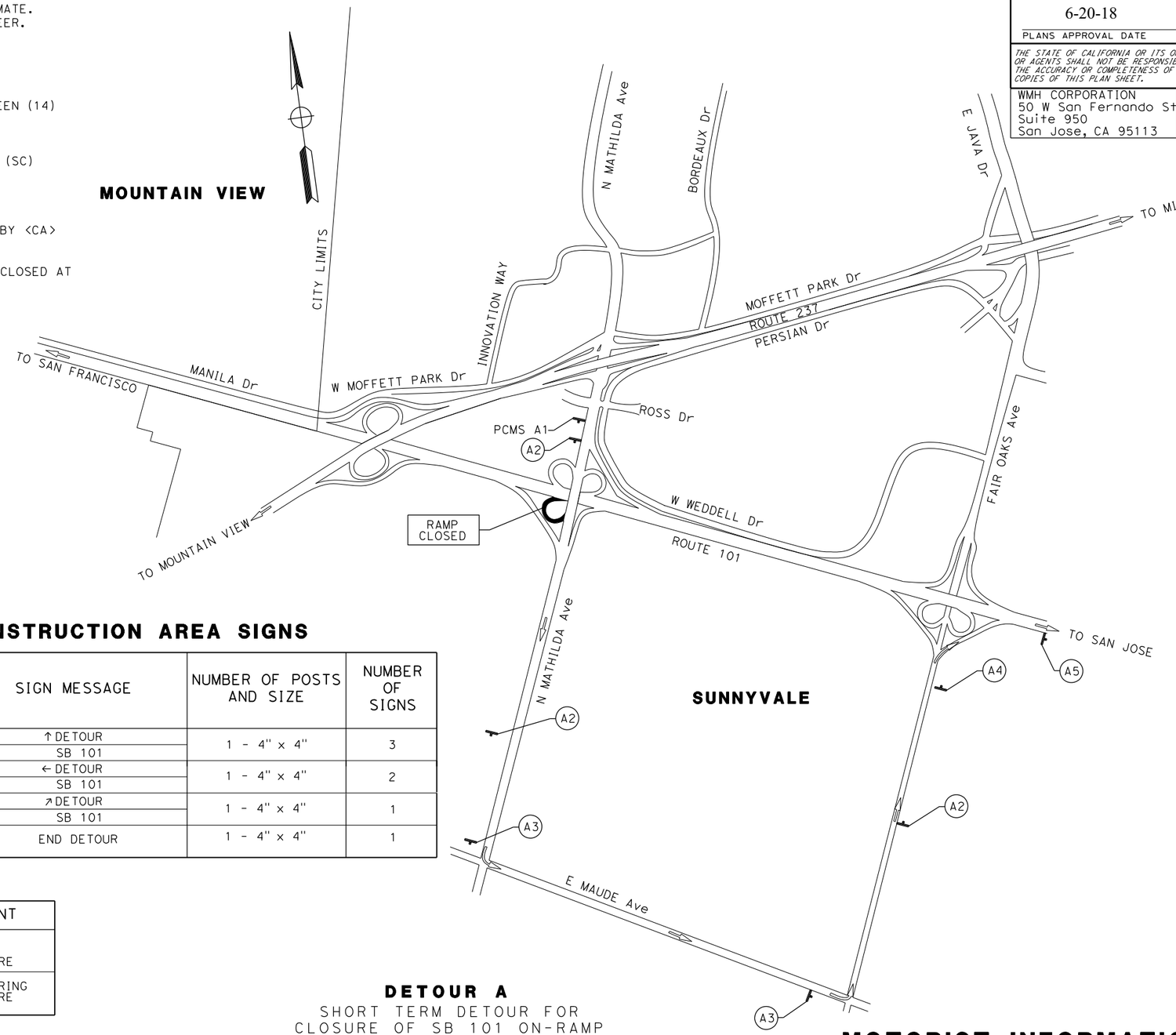

STATIONARY MOUNTED CONSTRUCTION AREA SIGNS

SIGN No. (X)	SIGN CODE		PANEL SIZE	SIGN MESSAGE	NUMBER OF POSTS AND SIZE	NUMBER OF SIGNS
	FEDERAL	CALIFORNIA				
A2		SC3 (↑) <CA>	36" x 12"	↑ DETOUR	1 - 4" x 4"	3
		Spec 1	36" x 30"	SB 101		
A3		SC3 (←) <CA>	36" x 12"	← DETOUR	1 - 4" x 4"	2
		Spec 1	36" x 30"	SB 101		
A4		SC3 (↗) <CA>	36" x 12"	↗ DETOUR	1 - 4" x 4"	1
		Spec 1	36" x 30"	SB 101		
A5	M4-8a		24" x 18"	END DETOUR	1 - 4" x 4"	1

PCMS SIGN

PCMS No.	MESSAGE 1	MESSAGE 2	COMMENT
A1	SB 101 ON RAMP CLOSED	DATE & TIME	MESSAGE PRIOR TO RAMP CLOSURE
	SB 101 ON RAMP CLOSED	FOLLOW DETOUR (ARROW)	MESSAGE DURING RAMP CLOSURE

DETOUR A
SHORT TERM DETOUR FOR CLOSURE OF SB 101 ON-RAMP FROM SB MATHILDA Ave
APPROVED FOR MOTORIST INFORMATION WORK ONLY

MOTORIST INFORMATION PLAN
NO SCALE

MI-1

REVISED BY	DATE REVISED
SCV	07/21/17
SCV	05/03/18

CALCULATED-DESIGNED BY: SHAWN VOGTMAN
CHECKED BY: STEPHEN HAAS
CONSULTANT FUNCTIONAL SUPERVISOR: TIMOTHY J. LEE
STATE OF CALIFORNIA - DEPARTMENT OF TRANSPORTATION
Caltrans

X:\237_101_Mathilda\000_CAD\Sheets\LB-Motorist Information\0413000204lb001.dgn

LAST REVISION 01-15-18
DATE PLOTTED => 6/20/2018
TIME PLOTTED => 11:12:57 AM

Dist	COUNTY	ROUTE	POST MILES TOTAL PROJECT	SHEET No.	TOTAL SHEETS
04	SCL	101,237	45.2/45.8, 2.7/3.3	167	736

REGISTERED CIVIL ENGINEER — 6-13-18 DATE

6-20-18
PLANS APPROVAL DATE

REGISTERED PROFESSIONAL ENGINEER — STEVE LOUPE — No. 63575 — Exp. 9/30/18 — CIVIL — STATE OF CALIFORNIA

THE STATE OF CALIFORNIA OR ITS OFFICERS OR AGENTS SHALL NOT BE RESPONSIBLE FOR THE ACCURACY OR COMPLETENESS OF SCANNED COPIES OF THIS PLAN SHEET.

WMH CORPORATION
50 W San Fernando St
Suite 950
San Jose, CA 95113

VTA
3331 N First St
Building B
San Jose, Ca 95134

PCMS SIGN

PCMS No.	MESSAGE 1	MESSAGE 2	COMMENT
B1	MATHILDA CLOSED	DATE & TIME	MESSAGE PRIOR TO RAMP CLOSURE
	MATHILDA CLOSED	USE FAIR OAKS AVE & RETURN	MESSAGE DURING RAMP CLOSURE

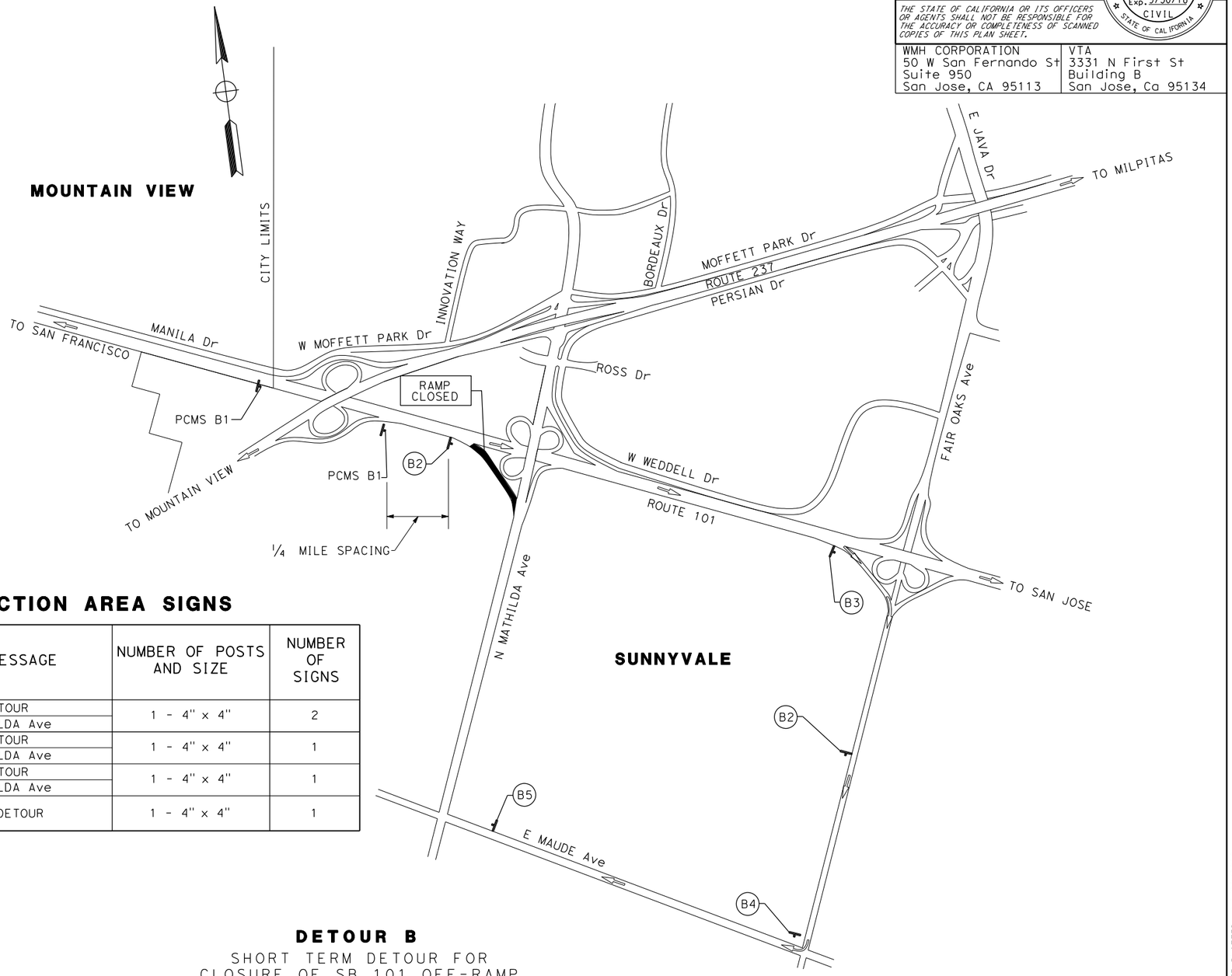

STATIONARY MOUNTED CONSTRUCTION AREA SIGNS

SIGN No. (X)	SIGN CODE		PANEL SIZE	SIGN MESSAGE	NUMBER OF POSTS AND SIZE	NUMBER OF SIGNS
	FEDERAL	CALIFORNIA				
B2		SC3 (↑) <CA>	36" x 12"	↑DETOUR	1 - 4" x 4"	2
		Spec 5	42" x 30"	MATHILDA Ave		
B3		SC3 (↗) <CA>	36" x 12"	↗DETOUR	1 - 4" x 4"	1
		Spec 5	42" x 30"	MATHILDA Ave		
B4		SC3 (→) <CA>	36" x 12"	→DETOUR	1 - 4" x 4"	1
		Spec 5	42" x 30"	MATHILDA Ave		
B5	M4-8a		24" x 18"	END DETOUR	1 - 4" x 4"	1

DETOUR B

SHORT TERM DETOUR FOR
CLOSURE OF SB 101 OFF-RAMP
TO SB MATHILDA Ave

APPROVED FOR MOTORIST INFORMATION WORK ONLY

FOR NOTES, ABBREVIATIONS AND LEGEND, SEE SHEET MI-1

MOTORIST INFORMATION PLAN

NO SCALE

MI-2

REVISED BY	DATE REVISED
SCV	07/21/17
SCV	05/03/18

CALCULATED-DESIGNED BY: SHAWN VOGTMAN
CHECKED BY: STEPHEN HAAS
CONSULTANT FUNCTIONAL SUPERVISOR: TIMOTHY J. LEE

STATE OF CALIFORNIA - DEPARTMENT OF TRANSPORTATION
Caltrans

X:\237_101_Mathilda\000_CAD\Sheets\LB-Motorist Information\0413000204lb002.dgn

LAST REVISION 01-15-18
DATE PLOTTED => 6/20/2018
TIME PLOTTED => 11:12:59 AM

BORDER LAST REVISED 7/2/2010 | USERNAME => Eilif | DGN FILE => 0413000204lb002.dgn | RELATIVE BORDER SCALE IS IN INCHES 0 1 2 3 | UNIT 0000 | PROJECT NUMBER & PHASE 0413000204

Dist	COUNTY	ROUTE	POST MILES TOTAL PROJECT	SHEET No.	TOTAL SHEETS
04	SCL	101,237	45.2/45.8, 2.7/3.3	168	736

REGISTERED CIVIL ENGINEER 6-13-18 DATE

6-20-18
PLANS APPROVAL DATE

REGISTERED PROFESSIONAL ENGINEER STEVE LOUPE No. 63575 Exp. 9/30/18 CIVIL STATE OF CALIFORNIA

THE STATE OF CALIFORNIA OR ITS OFFICERS OR AGENTS SHALL NOT BE RESPONSIBLE FOR THE ACCURACY OR COMPLETENESS OF SCANNED COPIES OF THIS PLAN SHEET.

WMH CORPORATION
50 W San Fernando St
Suite 950
San Jose, CA 95113

VTA
3331 N First St
Building B
San Jose, Ca 95134

PCMS SIGN

PCMS No.	MESSAGE 1	MESSAGE 2	COMMENT
C1	NB 101 ON RAMP CLOSED	DATE & TIME	MESSAGE PRIOR TO RAMP CLOSURE
	NB 101 ON RAMP CLOSED	FOLLOW DETOUR (ARROW)	MESSAGE DURING RAMP CLOSURE

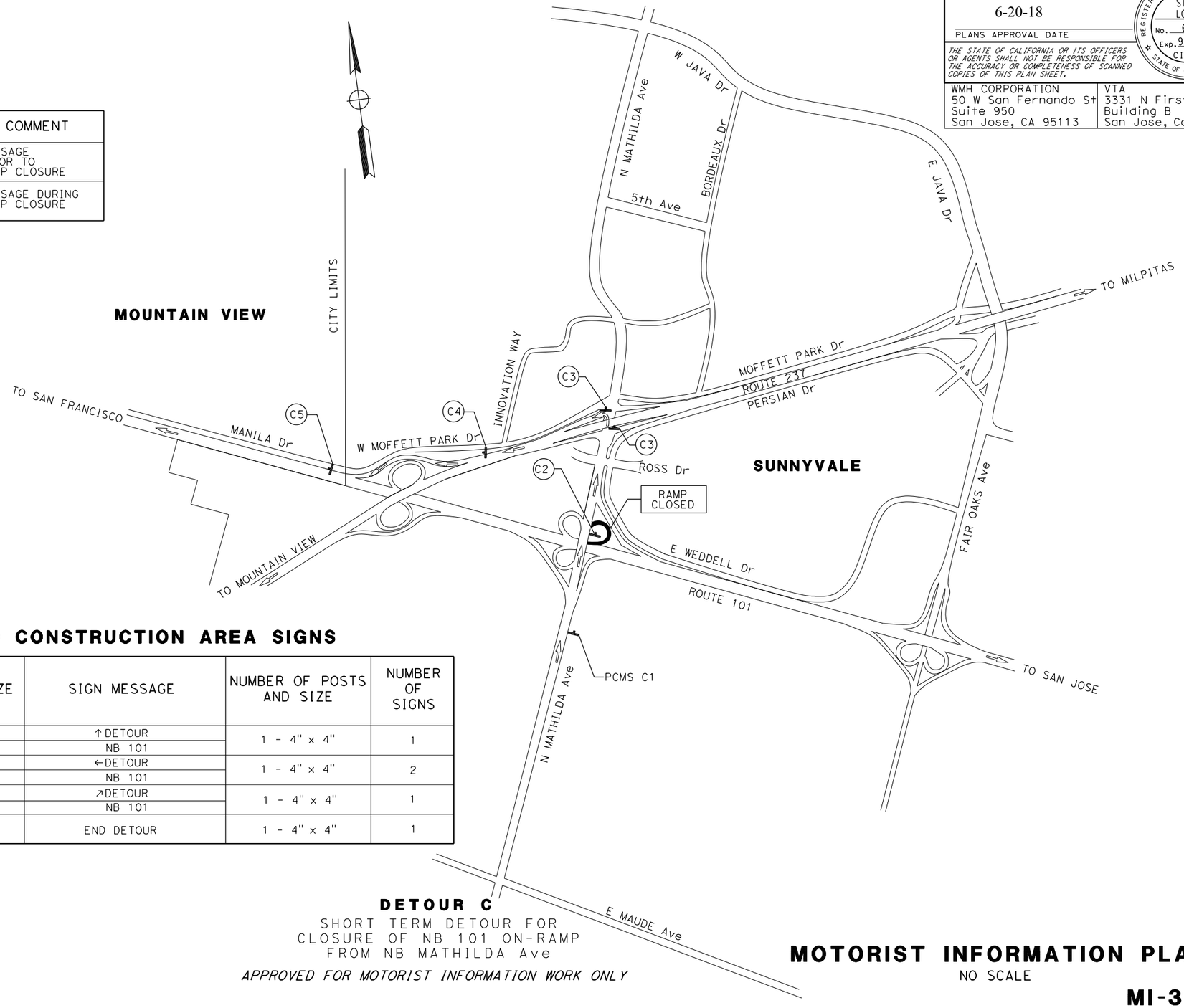

STATIONARY MOUNTED CONSTRUCTION AREA SIGNS

SIGN No. (X)	SIGN CODE FEDERAL	SIGN CODE CALIFORNIA	PANEL SIZE	SIGN MESSAGE	NUMBER OF POSTS AND SIZE	NUMBER OF SIGNS
C2		SC3 (↑) <CA>	36" x 12"	↑DETOUR	1 - 4" x 4"	1
		Spec 2	36" x 30"	NB 101		
C3		SC3 (←) <CA>	36" x 12"	←DETOUR	1 - 4" x 4"	2
		Spec 2	36" x 30"	NB 101		
C4		SC3 (↗) <CA>	36" x 12"	↗DETOUR	1 - 4" x 4"	1
		Spec 2	36" x 30"	NB 101		
C5	M4-8a		24" x 18"	END DETOUR	1 - 4" x 4"	1

DETOUR C
SHORT TERM DETOUR FOR
CLOSURE OF NB 101 ON-RAMP
FROM NB MATHILDA Ave

APPROVED FOR MOTORIST INFORMATION WORK ONLY

FOR NOTES, ABBREVIATIONS AND LEGEND, SEE SHEET MI-1

MOTORIST INFORMATION PLAN

NO SCALE

MI-3

REVISED BY	SCV
DATE REVISED	07/21/17 05/03/18
CALCULATED-DESIGNED BY	SHAWN VOGTMAN
CHECKED BY	STEPHEN HAAS
CONSULTANT FUNCTIONAL SUPERVISOR	TIMOTHY J. LEE

STATE OF CALIFORNIA - DEPARTMENT OF TRANSPORTATION
Caltrans

X:\237_101_Mathilda\000_CAD\Sheets\LB-Motorist Information\0413000204lb003.dgn

LAST REVISION 01-15-18
DATE PLOTTED => 6/20/2018
TIME PLOTTED => 11:13:01 AM

Dist	COUNTY	ROUTE	POST MILES TOTAL PROJECT	SHEET No.	TOTAL SHEETS
04	SCL	101,237	45.2/45.8, 2.7/3.3	169	736

6-13-18
REGISTERED CIVIL ENGINEER — DATE

6-20-18
PLANS APPROVAL DATE

REGISTERED PROFESSIONAL ENGINEER — STEVE LOUPE — No. 63575 — Exp. 9/30/18 — CIVIL — STATE OF CALIFORNIA

THE STATE OF CALIFORNIA OR ITS OFFICERS OR AGENTS SHALL NOT BE RESPONSIBLE FOR THE ACCURACY OR COMPLETENESS OF SCANNED COPIES OF THIS PLAN SHEET.

WMH CORPORATION
50 W San Fernando St
Suite 950
San Jose, CA 95113

VTA
3331 N First St
Building B
San Jose, Ca 95134

PCMS SIGN

PCMS No.	MESSAGE 1	MESSAGE 2	COMMENT
D1	EB 237 & NB MATHILDA CLOSED	DATE & TIME	MESSAGE PRIOR TO RAMP CLOSURE
	EB 237 & NB MATHILDA CLOSED	USE ELLIS ST & RETURN	MESSAGE DURING RAMP CLOSURE

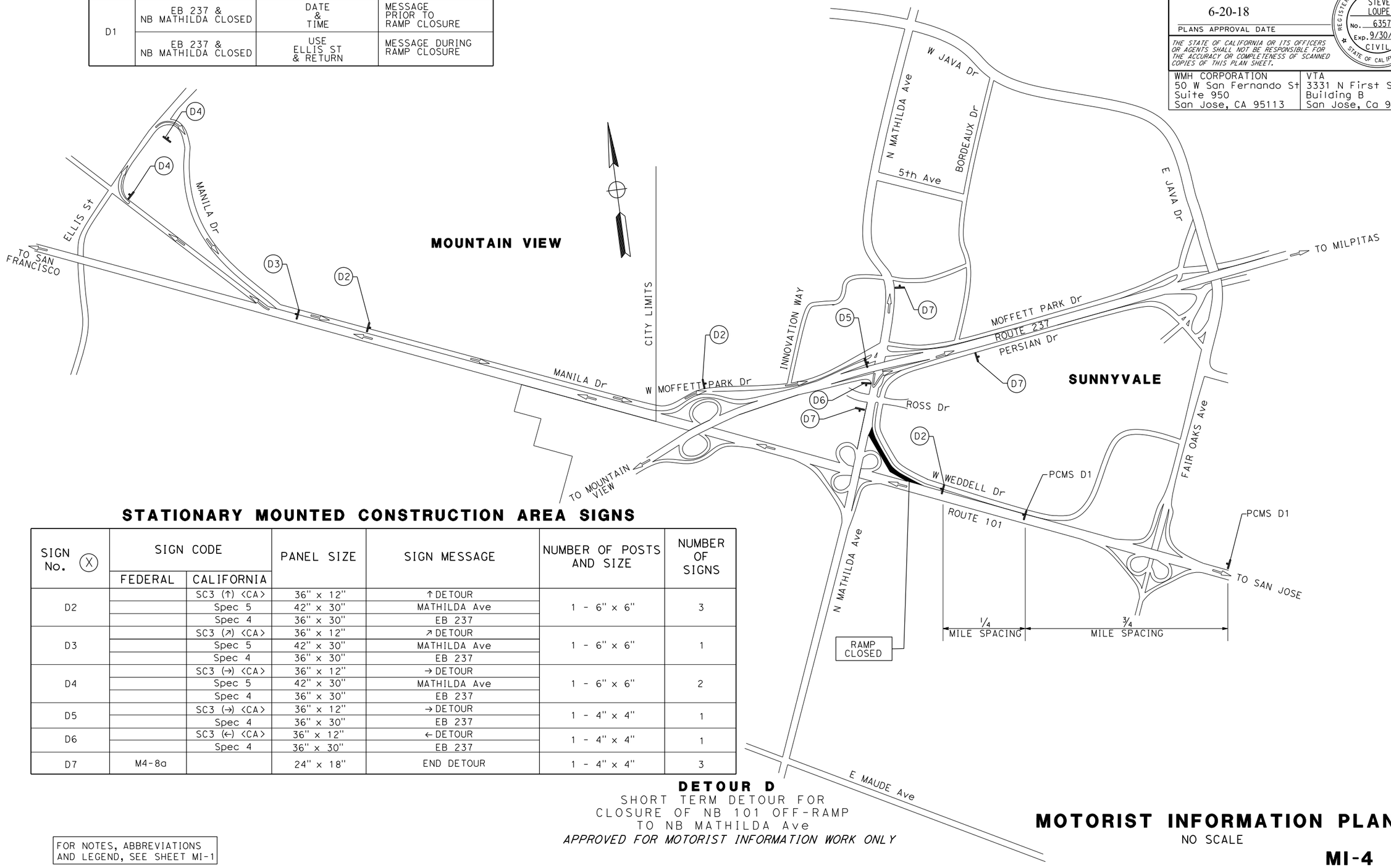

STATIONARY MOUNTED CONSTRUCTION AREA SIGNS

SIGN No. (X)	SIGN CODE		PANEL SIZE	SIGN MESSAGE	NUMBER OF POSTS AND SIZE	NUMBER OF SIGNS
	FEDERAL	CALIFORNIA				
D2		SC3 (↑) <CA>	36" x 12"	↑ DETOUR	1 - 6" x 6"	3
		Spec 5	42" x 30"	MATHILDA Ave		
		Spec 4	36" x 30"	EB 237		
D3		SC3 (↗) <CA>	36" x 12"	↗ DETOUR	1 - 6" x 6"	1
		Spec 5	42" x 30"	MATHILDA Ave		
		Spec 4	36" x 30"	EB 237		
D4		SC3 (→) <CA>	36" x 12"	→ DETOUR	1 - 6" x 6"	2
		Spec 5	42" x 30"	MATHILDA Ave		
		Spec 4	36" x 30"	EB 237		
D5		SC3 (→) <CA>	36" x 12"	→ DETOUR	1 - 4" x 4"	1
		Spec 4	36" x 30"	EB 237		
D6		SC3 (←) <CA>	36" x 12"	← DETOUR	1 - 4" x 4"	1
		Spec 4	36" x 30"	EB 237		
D7	M4-8a		24" x 18"	END DETOUR	1 - 4" x 4"	3

DETOUR D
SHORT TERM DETOUR FOR
CLOSURE OF NB 101 OFF-RAMP
TO NB MATHILDA Ave
APPROVED FOR MOTORIST INFORMATION WORK ONLY

FOR NOTES, ABBREVIATIONS AND LEGEND, SEE SHEET MI-1

MOTORIST INFORMATION PLAN

NO SCALE

MI-4

CALCULATED-DESIGNED BY	SHAWN VOGTMAN	REVISED BY	SCV
CHECKED BY	STEPHEN HAAS	DATE REVISED	07/21/17
			SCV
			05/03/18

TIMOTHY J. LEE
CONSULTANT FUNCTIONAL SUPERVISOR

STATE OF CALIFORNIA - DEPARTMENT OF TRANSPORTATION
Caltrans

X:\237_101_Mathilda\000_CAD\Sheets\LB-Motorist Information\0413000204lb004.dgn

LAST REVISION 01-15-18 | DATE PLOTTED => 6/20/2018 | TIME PLOTTED => 11:13:03 AM

BORDER LAST REVISED 7/2/2010 | USERNAME => Eilif | DGN FILE => 0413000204lb004.dgn | RELATIVE BORDER SCALE IS IN INCHES 0 1 2 3 | UNIT 0000 | PROJECT NUMBER & PHASE 0413000204

Dist	COUNTY	ROUTE	POST MILES TOTAL PROJECT	SHEET No.	TOTAL SHEETS
04	SCL	101,237	45.2/45.8, 2.7/3.3	170	736

REGISTERED CIVIL ENGINEER 6-13-18 DATE

6-20-18
PLANS APPROVAL DATE

REGISTERED PROFESSIONAL ENGINEER STEVE LOUPE No. 63575 Exp. 9/30/18 CIVIL STATE OF CALIFORNIA

THE STATE OF CALIFORNIA OR ITS OFFICERS OR AGENTS SHALL NOT BE RESPONSIBLE FOR THE ACCURACY OR COMPLETENESS OF SCANNED COPIES OF THIS PLAN SHEET.

WMH CORPORATION
50 W San Fernando St
Suite 950
San Jose, CA 95113

VTA
3331 N First St
Building B
San Jose, Ca 95134

PCMS SIGN

PCMS No.	MESSAGE 1	MESSAGE 2	COMMENT
E1	SB 101 ON RAMP CLOSED	DATE & TIME	MESSAGE PRIOR TO RAMP CLOSURE
	SB 101 ON RAMP CLOSED	FOLLOW DETOUR (ARROW)	MESSAGE DURING RAMP CLOSURE

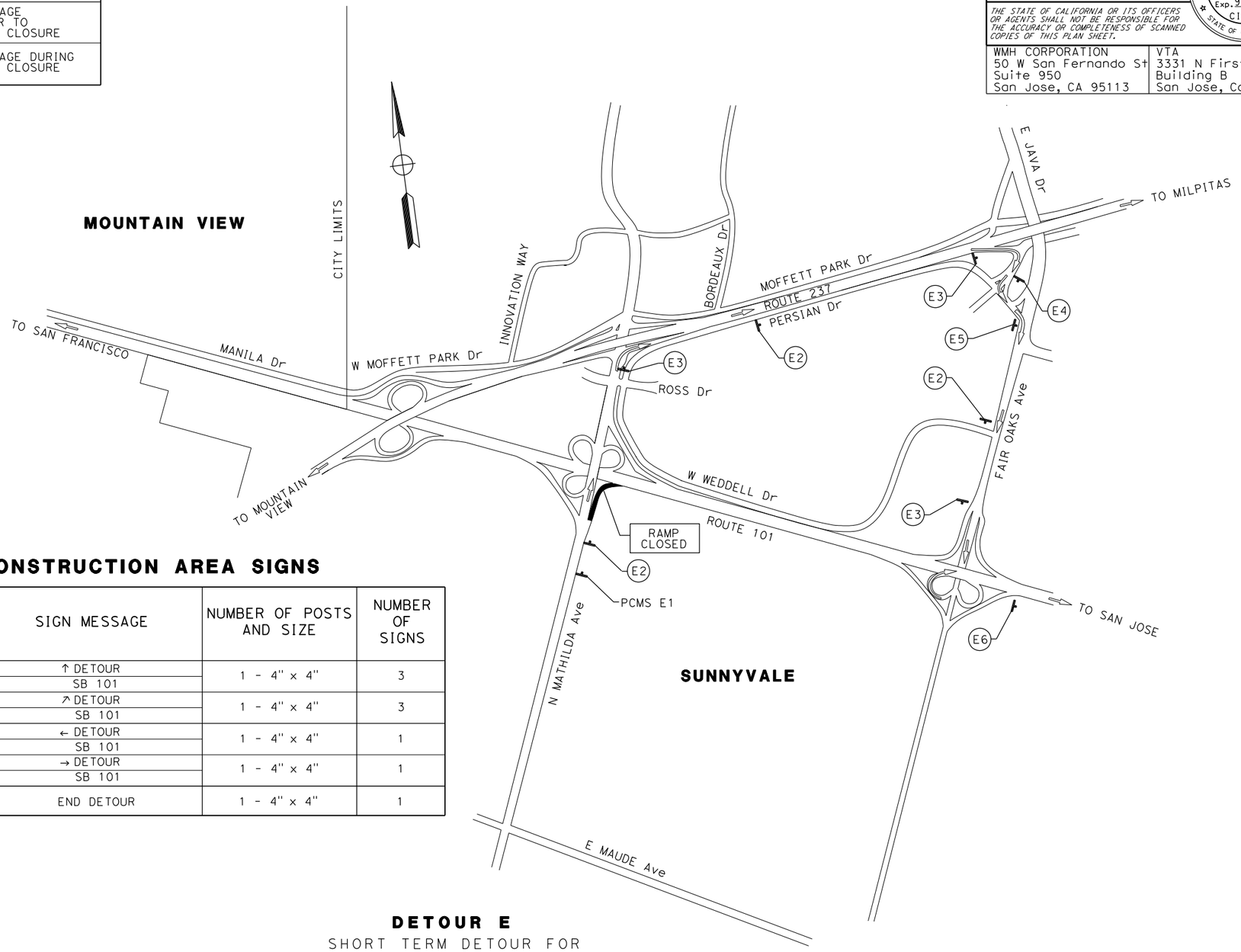

STATIONARY MOUNTED CONSTRUCTION AREA SIGNS

SIGN No. (X)	SIGN CODE FEDERAL	SIGN CODE CALIFORNIA	PANEL SIZE	SIGN MESSAGE	NUMBER OF POSTS AND SIZE	NUMBER OF SIGNS
E2		SC3 (↑) <CA>	36" x 12"	↑ DETOUR	1 - 4" x 4"	3
		Spec 1	36" x 30"	SB 101		
E3		SC3 (↗) <CA>	36" x 12"	↗ DETOUR	1 - 4" x 4"	3
		Spec 1	36" x 30"	SB 101		
E4		SC3 (←) <CA>	36" x 12"	← DETOUR	1 - 4" x 4"	1
		Spec 1	36" x 30"	SB 101		
E5		SC3 (→) <CA>	36" x 12"	→ DETOUR	1 - 4" x 4"	1
		Spec 1	36" x 30"	SB 101		
E6	M4-8a		24" x 18"	END DETOUR	1 - 4" x 4"	1

DETOUR E

SHORT TERM DETOUR FOR
CLOSURE OF SB 101 ON-RAMP
FROM NB MATHILDA Ave

APPROVED FOR MOTORIST INFORMATION WORK ONLY

FOR NOTES, ABBREVIATIONS AND LEGEND, SEE SHEET MI-1

MOTORIST INFORMATION PLAN

NO SCALE

MI-5

STATE OF CALIFORNIA - DEPARTMENT OF TRANSPORTATION
Caltrans
CONSULTANT FUNCTIONAL SUPERVISOR: TIMOTHY J. LEE
CALCULATED-DESIGNED BY: SHAWN VOGTMAN
CHECKED BY: STEPHEN HAAS
REVISED BY: SCV
DATE REVISED: 07/21/17 05/03/18

X:\237_101_Mathilda\000_CAD\Sheets\LB-Motorist Information\0413000204lb005.dgn

LAST REVISION 01-15-18
DATE PLOTTED => 6/20/2018
TIME PLOTTED => 11:13:05 AM

Dist	COUNTY	ROUTE	POST MILES TOTAL PROJECT	SHEET No.	TOTAL SHEETS
04	SCL	101,237	45.2/45.8, 2.7/3.3	171	736

REGISTERED CIVIL ENGINEER 6-13-18 DATE

6-20-18
PLANS APPROVAL DATE

REGISTERED PROFESSIONAL ENGINEER STEVE LOUPE No. 63575 Exp. 9/30/18 CIVIL STATE OF CALIFORNIA

THE STATE OF CALIFORNIA OR ITS OFFICERS OR AGENTS SHALL NOT BE RESPONSIBLE FOR THE ACCURACY OR COMPLETENESS OF SCANNED COPIES OF THIS PLAN SHEET.

WMH CORPORATION
50 W San Fernando St
Suite 950
San Jose, CA 95113

VTA
3331 N First St
Building B
San Jose, Ca 95134

PCMS SIGN

PCMS No.	MESSAGE 1	MESSAGE 2	COMMENT
F1	MATHILDA CLOSED	DATE & TIME	MESSAGE PRIOR TO RAMP CLOSURE
	MATHILDA CLOSED	FOLLOW DETOUR (ARROW)	MESSAGE DURING RAMP CLOSURE

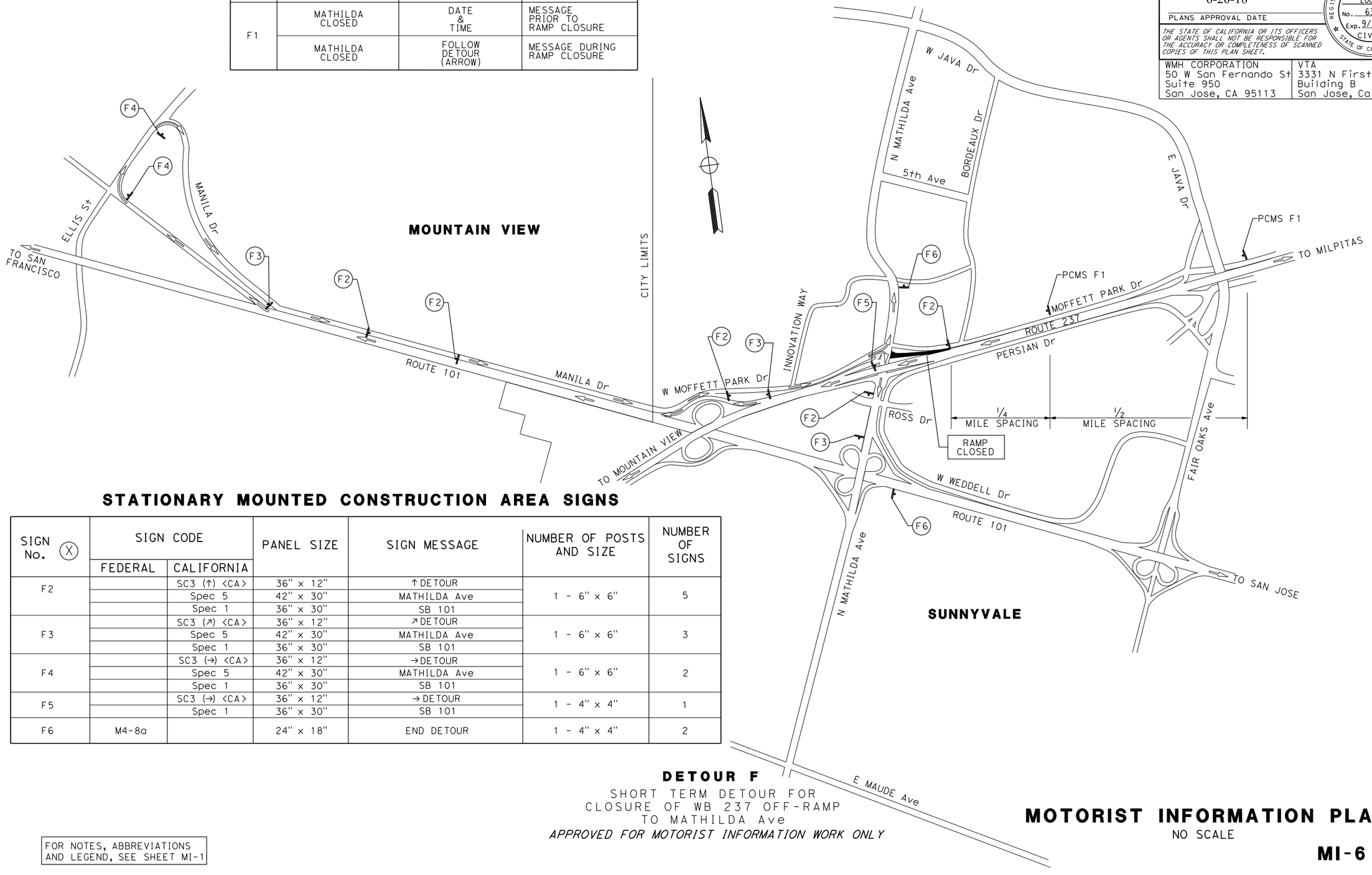

STATIONARY MOUNTED CONSTRUCTION AREA SIGNS

SIGN No. (X)	SIGN CODE FEDERAL	SIGN CODE CALIFORNIA	PANEL SIZE	SIGN MESSAGE	NUMBER OF POSTS AND SIZE	NUMBER OF SIGNS
F2		SC3 (↑) <CA>	36" x 12"	↑DETOUR	1 - 6" x 6"	5
		Spec 5	42" x 30"	MATHILDA Ave		
		Spec 1	36" x 30"	SB 101		
F3		SC3 (↗) <CA>	36" x 12"	↗DETOUR	1 - 6" x 6"	3
		Spec 5	42" x 30"	MATHILDA Ave		
		Spec 1	36" x 30"	SB 101		
F4		SC3 (→) <CA>	36" x 12"	→DETOUR	1 - 6" x 6"	2
		Spec 5	42" x 30"	MATHILDA Ave		
		Spec 1	36" x 30"	SB 101		
F5		SC3 (→) <CA>	36" x 12"	→DETOUR	1 - 4" x 4"	1
		Spec 1	36" x 30"	SB 101		
F6	M4-8a		24" x 18"	END DETOUR	1 - 4" x 4"	2

DETOUR F
SHORT TERM DETOUR FOR
CLOSURE OF WB 237 OFF-RAMP
TO MATHILDA Ave
APPROVED FOR MOTORIST INFORMATION WORK ONLY

FOR NOTES, ABBREVIATIONS AND LEGEND, SEE SHEET MI-1

MOTORIST INFORMATION PLAN
NO SCALE

MI-6

STATE OF CALIFORNIA - DEPARTMENT OF TRANSPORTATION
Caltrans
CONSULTANT FUNCTIONAL SUPERVISOR: TIMOTHY J. LEE
CALCULATED-DESIGNED BY: SHAWN VOGTMAN
CHECKED BY: STEPHEN HAAS
REVISED BY: SCV
DATE REVISED: 07/21/17 05/03/18
X:\237_101_Mathilda\000_CAD\Sheets\LB-Motorist Information\04130002041b006.dgn

LAST REVISION 01-15-18
DATE PLOTTED => 6/20/2018
TIME PLOTTED => 11:13:07 AM

BORDER LAST REVISED 7/2/2010
USERNAME => Eilif
DGN FILE => 04130002041b006.dgn
RELATIVE BORDER SCALE IS IN INCHES 0 1 2 3
UNIT 0000
PROJECT NUMBER & PHASE 0413000204

Dist	COUNTY	ROUTE	POST MILES TOTAL PROJECT	SHEET No.	TOTAL SHEETS
04	SCL	101,237	45.2/45.8, 2.7/3.3	172	736

REGISTERED CIVIL ENGINEER 6-13-18 DATE

6-20-18
PLANS APPROVAL DATE

REGISTERED PROFESSIONAL ENGINEER STEVE LOUPE No. 63575 Exp. 9/30/18 CIVIL STATE OF CALIFORNIA

THE STATE OF CALIFORNIA OR ITS OFFICERS OR AGENTS SHALL NOT BE RESPONSIBLE FOR THE ACCURACY OR COMPLETENESS OF SCANNED COPIES OF THIS PLAN SHEET.

WMH CORPORATION
50 W San Fernando St
Suite 950
San Jose, CA 95113

VTA
3331 N First St
Building B
San Jose, Ca 95134

PCMS SIGN

PCMS No.	MESSAGE 1	MESSAGE 2	COMMENT
G1	WB 237 ON RAMP CLOSED	DATE & TIME	MESSAGE PRIOR TO RAMP CLOSURE
	WB 237 ON RAMP CLOSED	FOLLOW DETOUR (ARROW)	MESSAGE DURING RAMP CLOSURE

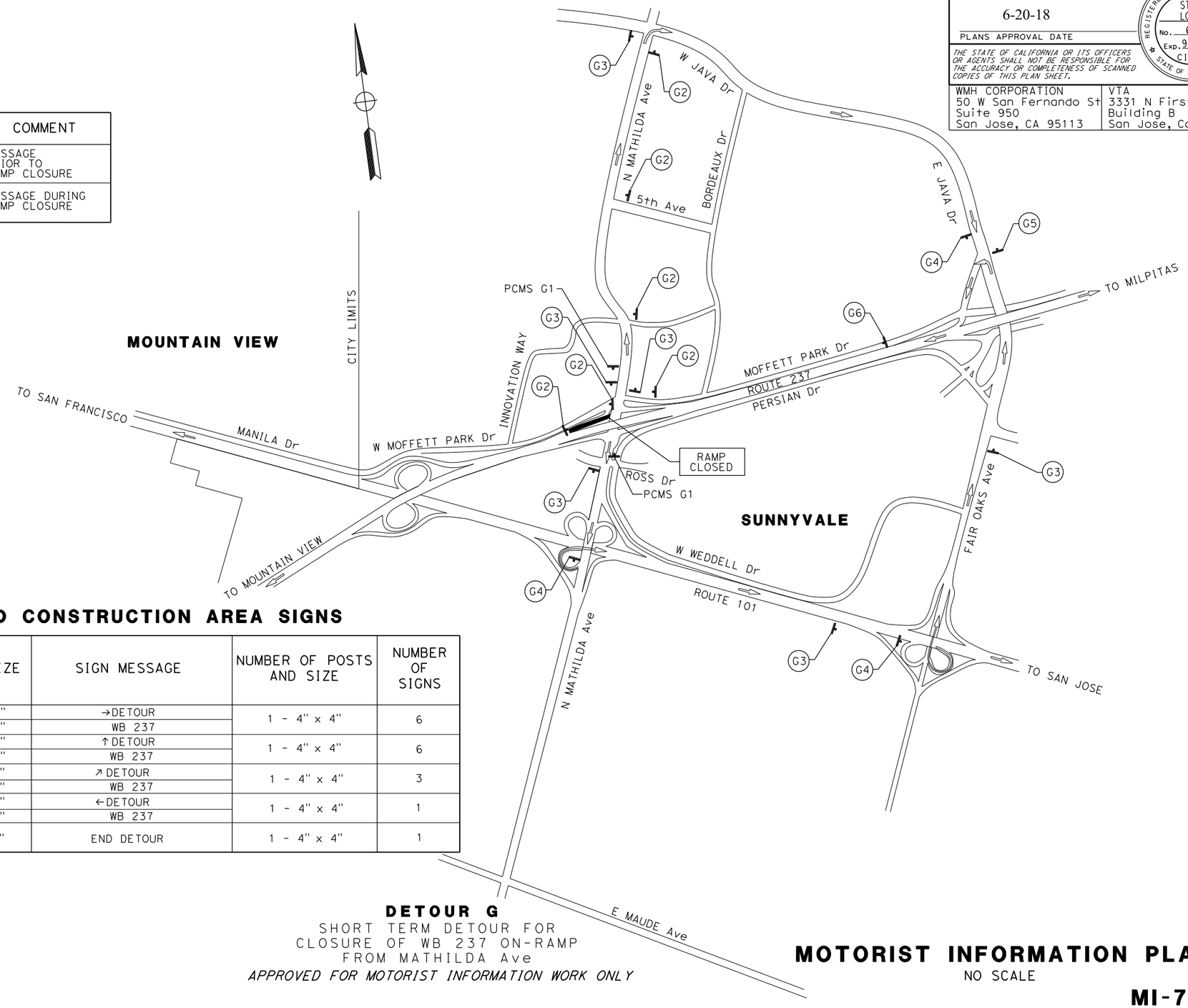

STATIONARY MOUNTED CONSTRUCTION AREA SIGNS

SIGN No. (X)	SIGN CODE FEDERAL	SIGN CODE CALIFORNIA	PANEL SIZE	SIGN MESSAGE	NUMBER OF POSTS AND SIZE	NUMBER OF SIGNS
G2		SC3 (→) <CA>	36" x 12"	→DETOUR	1 - 4" x 4"	6
		Spec 3	36" x 30"	WB 237		
G3		SC3 (↑) <CA>	36" x 12"	↑DETOUR	1 - 4" x 4"	6
		Spec 3	36" x 30"	WB 237		
G4		SC3 (↗) <CA>	36" x 12"	↗DETOUR	1 - 4" x 4"	3
		Spec 3	36" x 30"	WB 237		
G5		SC3 (←) <CA>	36" x 12"	←DETOUR	1 - 4" x 4"	1
		Spec 3	36" x 30"	WB 237		
G6	M4-8a		24" x 18"	END DETOUR	1 - 4" x 4"	1

DETOUR G
SHORT TERM DETOUR FOR
CLOSURE OF WB 237 ON-RAMP
FROM MATHILDA Ave
APPROVED FOR MOTORIST INFORMATION WORK ONLY

FOR NOTES, ABBREVIATIONS AND LEGEND, SEE SHEET MI-1

MOTORIST INFORMATION PLAN
NO SCALE

MI-7

REVISED BY	DATE REVISED	CALCULATED-DESIGNED BY	CHECKED BY	CONSULTANT FUNCTIONAL SUPERVISOR
SCV	07/21/17	SHAWN VOGTMAN	STEPHEN HAAS	TIMOTHY J. LEE
SCV	05/03/18			

STATE OF CALIFORNIA - DEPARTMENT OF TRANSPORTATION
Caltrans

X:\237_101_Mathilda\000_CAD\Sheets\LB-Motorist Information\0413000204lb007.dgn

LAST REVISION 01-15-18 DATE PLOTTED => 6/20/2018 TIME PLOTTED => 11:13:09 AM

Dist	COUNTY	ROUTE	POST MILES TOTAL PROJECT	SHEET No.	TOTAL SHEETS
04	SCL	101,237	45.2/45.8, 2.7/3.3	173	736

REGISTERED CIVIL ENGINEER 6-13-18 DATE

6-20-18
PLANS APPROVAL DATE

REGISTERED PROFESSIONAL ENGINEER STEVE LOUPE No. 63575 Exp. 9/30/18 CIVIL STATE OF CALIFORNIA

THE STATE OF CALIFORNIA OR ITS OFFICERS OR AGENTS SHALL NOT BE RESPONSIBLE FOR THE ACCURACY OR COMPLETENESS OF SCANNED COPIES OF THIS PLAN SHEET.

WMH CORPORATION
50 W San Fernando St
Suite 950
San Jose, CA 95113

VTA
3331 N First St
Building B
San Jose, Ca 95134

PCMS SIGN

PCMS No.	MESSAGE 1	MESSAGE 2	COMMENT
H1	EB 237 ON RAMP CLOSED	DATE & TIME	MESSAGE PRIOR TO RAMP CLOSURE
	EB 237 ON RAMP CLOSED	FOLLOW DETOUR (ARROW)	MESSAGE DURING RAMP CLOSURE

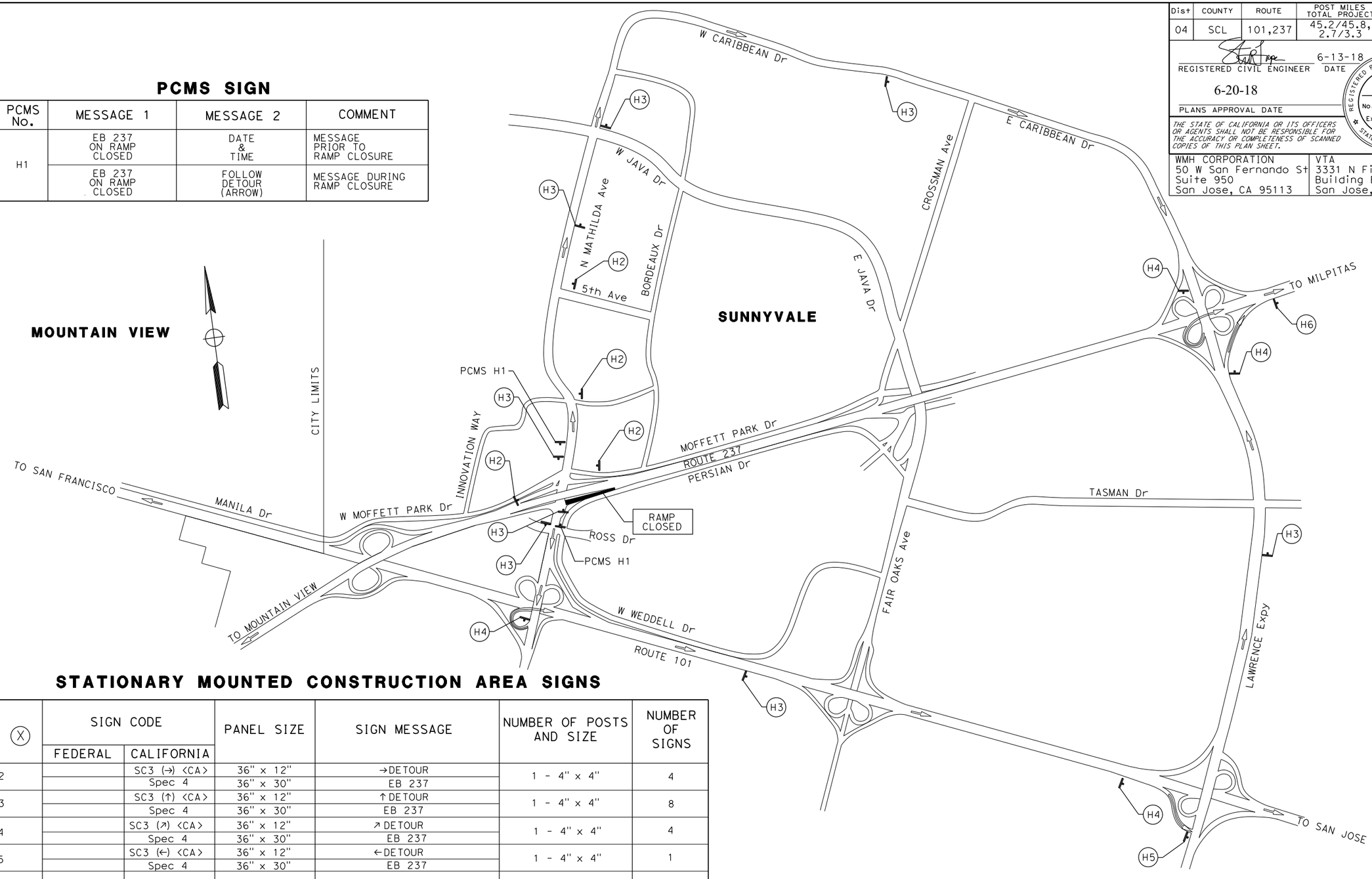

STATIONARY MOUNTED CONSTRUCTION AREA SIGNS

SIGN No. (X)	SIGN CODE FEDERAL	SIGN CODE CALIFORNIA	PANEL SIZE	SIGN MESSAGE	NUMBER OF POSTS AND SIZE	NUMBER OF SIGNS
H2		SC3 (→) <CA>	36" x 12"	→DETOUR	1 - 4" x 4"	4
		Spec 4	36" x 30"	EB 237		
H3		SC3 (↑) <CA>	36" x 12"	↑DETOUR	1 - 4" x 4"	8
		Spec 4	36" x 30"	EB 237		
H4		SC3 (↗) <CA>	36" x 12"	↗DETOUR	1 - 4" x 4"	4
		Spec 4	36" x 30"	EB 237		
H5		SC3 (←) <CA>	36" x 12"	←DETOUR	1 - 4" x 4"	1
		Spec 4	36" x 30"	EB 237		
H6	M4-8a		24" x 18"	END DETOUR	1 - 4" x 4"	1

DETOUR H
SHORT TERM DETOUR FOR
CLOSURE OF EB 237 ON-RAMP
FROM NB MATHILDA Ave
APPROVED FOR MOTORIST INFORMATION WORK ONLY

FOR NOTES, ABBREVIATIONS AND LEGEND, SEE SHEET MI-1

MOTORIST INFORMATION PLAN
NO SCALE

MI-8

REVISED BY	SCV
DATE REVISED	07/21/17 05/03/18
CALCULATED-DESIGNED BY	SHAWN VOGTMAN
CHECKED BY	STEPHEN HAAS
CONSULTANT FUNCTIONAL SUPERVISOR	TIMOTHY J. LEE

STATE OF CALIFORNIA - DEPARTMENT OF TRANSPORTATION
Caltrans

X:\237_101_Mathilda\000_CAD\Sheets\LB-Motorist Information\0413000204lb008.dgn

LAST REVISION 01-15-18
DATE PLOTTED => 6/20/2018
TIME PLOTTED => 11:13:11 AM

Dist	COUNTY	ROUTE	POST MILES TOTAL PROJECT	SHEET No.	TOTAL SHEETS
04	SCL	101,237	45.2/45.8, 2.7/3.3	174	736

REGISTERED CIVIL ENGINEER — 6-13-18 DATE

6-20-18
PLANS APPROVAL DATE

REGISTERED PROFESSIONAL ENGINEER — STEVE LOUPE — No. 63575 — Exp. 9/30/18 — CIVIL — STATE OF CALIFORNIA

THE STATE OF CALIFORNIA OR ITS OFFICERS OR AGENTS SHALL NOT BE RESPONSIBLE FOR THE ACCURACY OR COMPLETENESS OF SCANNED COPIES OF THIS PLAN SHEET.

WMH CORPORATION 50 W San Fernando St Suite 950 San Jose, CA 95113	VTA 3331 N First St Building B San Jose, Ca 95134

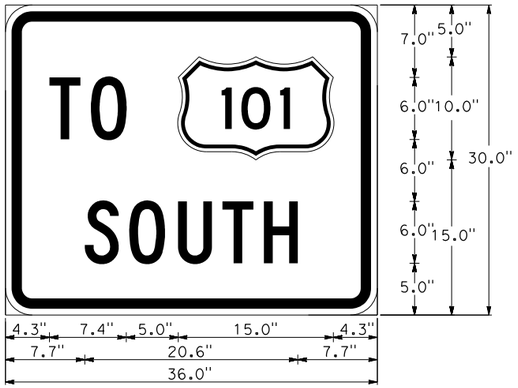

2.6" Radius, 1.0" Border, 0.6" Indent, Black on Orange;
[TO] C; [SOUTH] C;

Spec 1

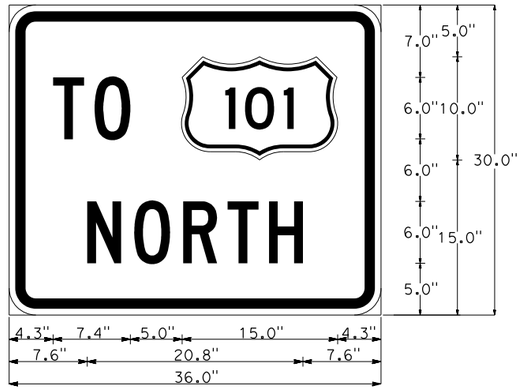

2.6" Radius, 1.0" Border, 0.6" Indent, Black on Orange;
[TO] C; [NORTH] C;

Spec 2

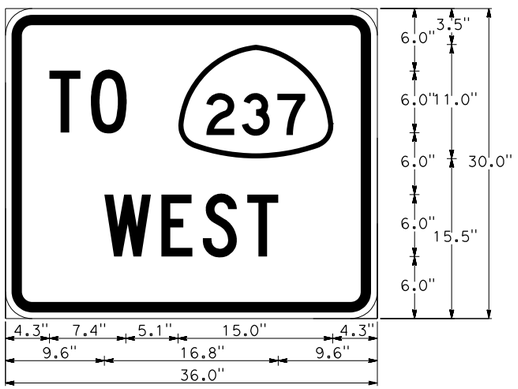

2.6" Radius, 1.0" Border, 0.6" Indent, Black on Orange;
[TO] C; [WEST] C;

Spec 3

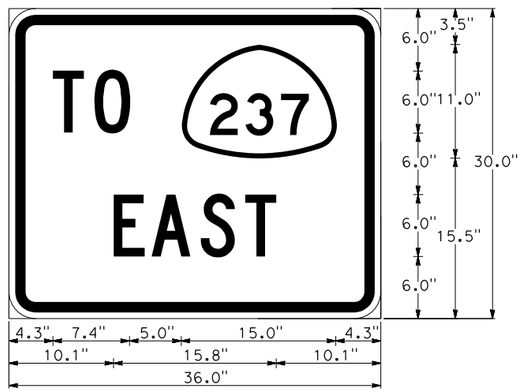

2.6" Radius, 1.0" Border, 0.6" Indent, Black on Orange;
[TO] C; [EAST] C;

Spec 4

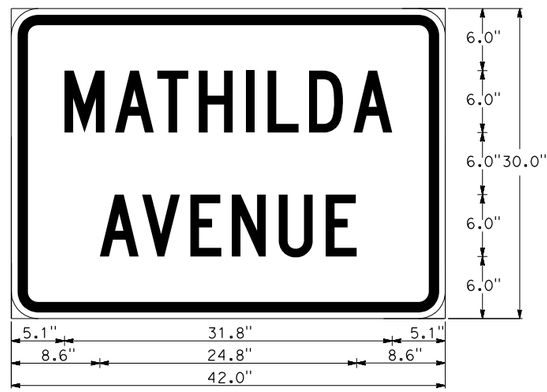

2.6" Radius, 1.0" Border, 0.6" Indent, Black on Orange;
[MATHILDA] C; [AVENUE] C;

Spec 5

APPROVED FOR MOTORIST INFORMATION WORK ONLY

MOTORIST INFORMATION PLAN

NO SCALE

MI-9

STATE OF CALIFORNIA - DEPARTMENT OF TRANSPORTATION	CONSULTANT FUNCTIONAL SUPERVISOR	TIMOTHY J. LEE	CALCULATED-DESIGNED BY	SHAWN VOGTMAN	REVISED BY	SCV
Caltrans			CHECKED BY	STEPHEN HAAS	DATE REVISED	07/21/17 05/03/18

X:\237_101_Mathilda\000_CAD\Sheets\LB-Motorist Information\0413000204lb009.dgn

LAST REVISION 01-15-18 | DATE PLOTTED => 6/20/2018 | TIME PLOTTED => 11:13:14 AM

BORDER LAST REVISED 7/2/2010 | USERNAME => Eilif | DGN FILE => 0413000204lb009.dgn | RELATIVE BORDER SCALE IS IN INCHES 0 1 2 3 | UNIT 0000 | PROJECT NUMBER & PHASE 0413000204

Dist	COUNTY	ROUTE	POST MILES TOTAL PROJECT	SHEET No.	TOTAL SHEETS
04	SCL	101,237	45.2/45.8, 2.7/3.3	175	736

6-13-18
REGISTERED CIVIL ENGINEER DATE

STEVE LOUPE No. 63575 Exp. 9/30/20 CIVIL — REGISTERED PROFESSIONAL ENGINEER — STATE OF CALIFORNIA

6-20-18
PLANS APPROVAL DATE

THE STATE OF CALIFORNIA OR ITS OFFICERS OR AGENTS SHALL NOT BE RESPONSIBLE FOR THE ACCURACY OR COMPLETENESS OF SCANNED COPIES OF THIS PLAN SHEET.

WMH CORPORATION 50 W San Fernando St Suite 950 San Jose, CA 95113	VTA 3331 N First St Building B San Jose, Ca 95134

NOTES:

1. MODIFICATION OF PROPOSED DRAINAGE SYSTEMS MAY BE NECESSARY TO PROVIDE TEMPORARY DRAINAGE.
2. CONTRACTOR SHALL NOT PLACE UPPER MOST LAYER OF PAVEMENT UNTIL ALL STAGING IS COMPLETE IN THAT AREA, AS SHOWN ON THESE PLANS AND, AS DIRECTED BY THE ENGINEER.
3. SEE PAVEMENT DELINEATION PLANS FOR FINAL STRIPING.
4. SEE TRAFFIC HANDLING PLANS FOR STAGE CONSTRUCTION TRAFFIC HANDLING INFORMATION, AND DETAILS.
5. SEE DETOUR PLANS FOR STAGE CONSTRUCTION Temp DETOUR DESIGN, AND DETAILS.
6. SEE MOTORIST INFORMATION PLAN SHEETS FOR STAGE CONSTRUCTION TRAFFIC DETOURS AND SIGNING.
7. SEE CONSTRUCTION DETAIL SHEETS FOR ALL ADL REMOVAL AREAS.
8. THE CONTRACTOR SHALL NOTIFY THE ENGINEER, IN WRITING, NOT LESS THAN 72 HOURS PRIOR TO COMMENCING PEDESTRIAN AND DRIVEWAY ACCESS IMPROVEMENTS. WORK SHALL BE SCHEDULED SO THAT REASONABLE PEDESTRIAN AND DRIVEWAY ACCESS IS MAINTAINED AT ALL TIMES.
9. FOR PAVEMENT DELINEATION REMOVAL LIMITS SEE TRAFFIC HANDLING PLAN SHEETS.
10. FOR TEMPORARY CONFORM LOCATIONS, SEE TRAFFIC HANDLING PLAN SHEETS.
11. FOR TEMPORARY CONFORM DETAILS, SEE CONSTRUCTION DETAIL SHEETS.
12. INSTALL AND ACTIVATE SIGNAL (CITY STREET LOCATION 10) PRIOR TO CLOSING MOFFETT PARK DRIVE (EAST)

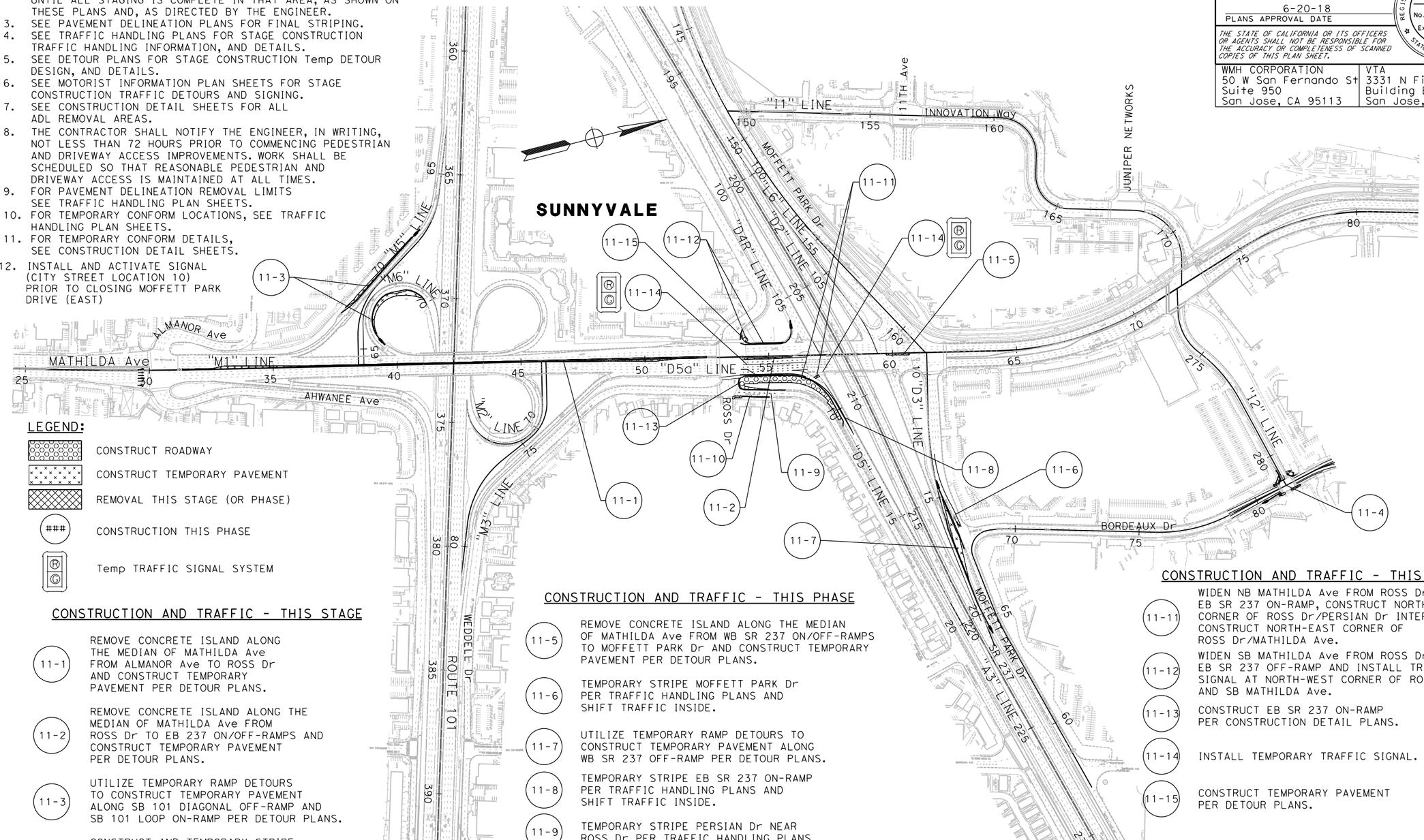

LEGEND:

- CONSTRUCT ROADWAY
- CONSTRUCT TEMPORARY PAVEMENT
- REMOVAL THIS STAGE (OR PHASE)
- ### CONSTRUCTION THIS PHASE
- Temp TRAFFIC SIGNAL SYSTEM

CONSTRUCTION AND TRAFFIC - THIS STAGE

11-1 REMOVE CONCRETE ISLAND ALONG THE MEDIAN OF MATHILDA Ave FROM ALMANOR Ave TO ROSS Dr AND CONSTRUCT TEMPORARY PAVEMENT PER DETOUR PLANS.

11-2 REMOVE CONCRETE ISLAND ALONG THE MEDIAN OF MATHILDA Ave FROM ROSS Dr TO EB 237 ON/OFF-RAMPS AND CONSTRUCT TEMPORARY PAVEMENT PER DETOUR PLANS.

11-3 UTILIZE TEMPORARY RAMP DETOURS TO CONSTRUCT TEMPORARY PAVEMENT ALONG SB 101 DIAGONAL OFF-RAMP AND SB 101 LOOP ON-RAMP PER DETOUR PLANS.

11-4 CONSTRUCT AND TEMPORARY STRIPE INTERSECTION OF BORDEAUX Dr/ INNOVATION Way PER CONSTRUCTION DETAILS AND TRAFFIC HANDLING PLANS.
INSTALL SIGNAL CITY STREET (LOCATION 10)

CONSTRUCTION AND TRAFFIC - THIS PHASE

11-5 REMOVE CONCRETE ISLAND ALONG THE MEDIAN OF MATHILDA Ave FROM WB SR 237 ON/OFF-RAMPS TO MOFFETT PARK Dr AND CONSTRUCT TEMPORARY PAVEMENT PER DETOUR PLANS.

11-6 TEMPORARY STRIPE MOFFETT PARK Dr PER TRAFFIC HANDLING PLANS AND SHIFT TRAFFIC INSIDE.

11-7 UTILIZE TEMPORARY RAMP DETOURS TO CONSTRUCT TEMPORARY PAVEMENT ALONG WB SR 237 OFF-RAMP PER DETOUR PLANS.

11-8 TEMPORARY STRIPE EB SR 237 ON-RAMP PER TRAFFIC HANDLING PLANS AND SHIFT TRAFFIC INSIDE.

11-9 TEMPORARY STRIPE PERSIAN Dr NEAR ROSS Dr PER TRAFFIC HANDLING PLANS.

11-10 CONSTRUCT NORTH-EAST CORNER OF ROSS Dr/ PERSIAN Dr INTERSECTION PER CONSTRUCTION DETAIL PLANS.

DETOURS - THIS PHASE

(SEE NOTE 6)
A, B, & H

CONSTRUCTION AND TRAFFIC - THIS STAGE

11-11 WIDEN NB MATHILDA Ave FROM ROSS Dr TO EB SR 237 ON-RAMP, CONSTRUCT NORTH-WEST CORNER OF ROSS Dr/PERSIAN Dr INTERSECTION, CONSTRUCT NORTH-EAST CORNER OF ROSS Dr/MATHILDA Ave.

11-12 WIDEN SB MATHILDA Ave FROM ROSS Dr TO EB SR 237 OFF-RAMP AND INSTALL TRAFFIC SIGNAL AT NORTH-WEST CORNER OF ROSS Dr AND SB MATHILDA Ave.

11-13 CONSTRUCT EB SR 237 ON-RAMP PER CONSTRUCTION DETAIL PLANS.

11-14 INSTALL TEMPORARY TRAFFIC SIGNAL.

11-15 CONSTRUCT TEMPORARY PAVEMENT PER DETOUR PLANS.

APPROVED FOR STAGE CONSTRUCTION WORK ONLY

STAGE CONSTRUCTION
STAGE 1 - PHASE 1
NO SCALE

SC-1

CALCULATED-DESIGNED BY	CHECKED BY	REVISED BY	DATE REVISED
CARLOS RODRIGUEZ	SHAWN VOGTMAN	SCV	01/5/18

SUPERVISOR TIMOTHY J. LEE
CONSULTANT FUNCTIONAL SUPERVISOR
STATE OF CALIFORNIA - DEPARTMENT OF TRANSPORTATION
Caltrans

LAST REVISION 01-15-18 | DATE PLOTTED => 12/3/2018 | TIME PLOTTED => 12:21:48 PM

X:\237_101_Mathildadv\000_CAD\Sheets\000_Submittals\Conformed Plans\0413000204ma001.dgn

BORDER LAST REVISED 7/2/2010 | USERNAME => eiiif | DGN FILE => 0413000204ma001.dgn | RELATIVE BORDER SCALE IS IN INCHES 0 1 2 3 | UNIT 0000 | PROJECT NUMBER & PHASE 0413000204

Dist	COUNTY	ROUTE	POST MILES TOTAL PROJECT	SHEET No.	TOTAL SHEETS
04	SCL	101,237	45.2/45.8, 2.7/3.3	176	736

6-13-18
REGISTERED CIVIL ENGINEER DATE

STEVE LOUPE No. 63575 Exp. 9/30/20 CIVIL — REGISTERED PROFESSIONAL ENGINEER — STATE OF CALIFORNIA

6-20-18
PLANS APPROVAL DATE

THE STATE OF CALIFORNIA OR ITS OFFICERS OR AGENTS SHALL NOT BE RESPONSIBLE FOR THE ACCURACY OR COMPLETENESS OF SCANNED COPIES OF THIS PLAN SHEET.

WMH CORPORATION
50 W San Fernando St
Suite 950
San Jose, CA 95113

VTA
3331 N First St
Building B
San Jose, Ca 95134

CONSTRUCTION AND TRAFFIC - THIS STAGE

(12-21) CLOSE MOFFETT PARK Dr BETWEEN MATHILDA Ave AND BORDEAUX Dr. TEMPORARY STRIPE MOFFETT PARK Dr TO DIRECTLY CONNECT TO BORDEAUX Dr PER TRAFFIC HANDLING PLANS.

(12-22) REMOVE CONCRETE ISLAND ALONG THE MEDIAN OF MATHILDA Ave FROM MOFFETT PARK Dr TO DRIVEWAY NORTH OF MOFFETT PARK Dr PER DETOUR PLANS.

(12-23) PLACE K-RAIL TO ELIMINATE STRAIGHT MOVEMENT AS MOFFETT PARK Dr EB ENDS THEN REMOVE MEDIAN ISLAND AND CONSTRUCT TEMPORARY PAVEMENT.

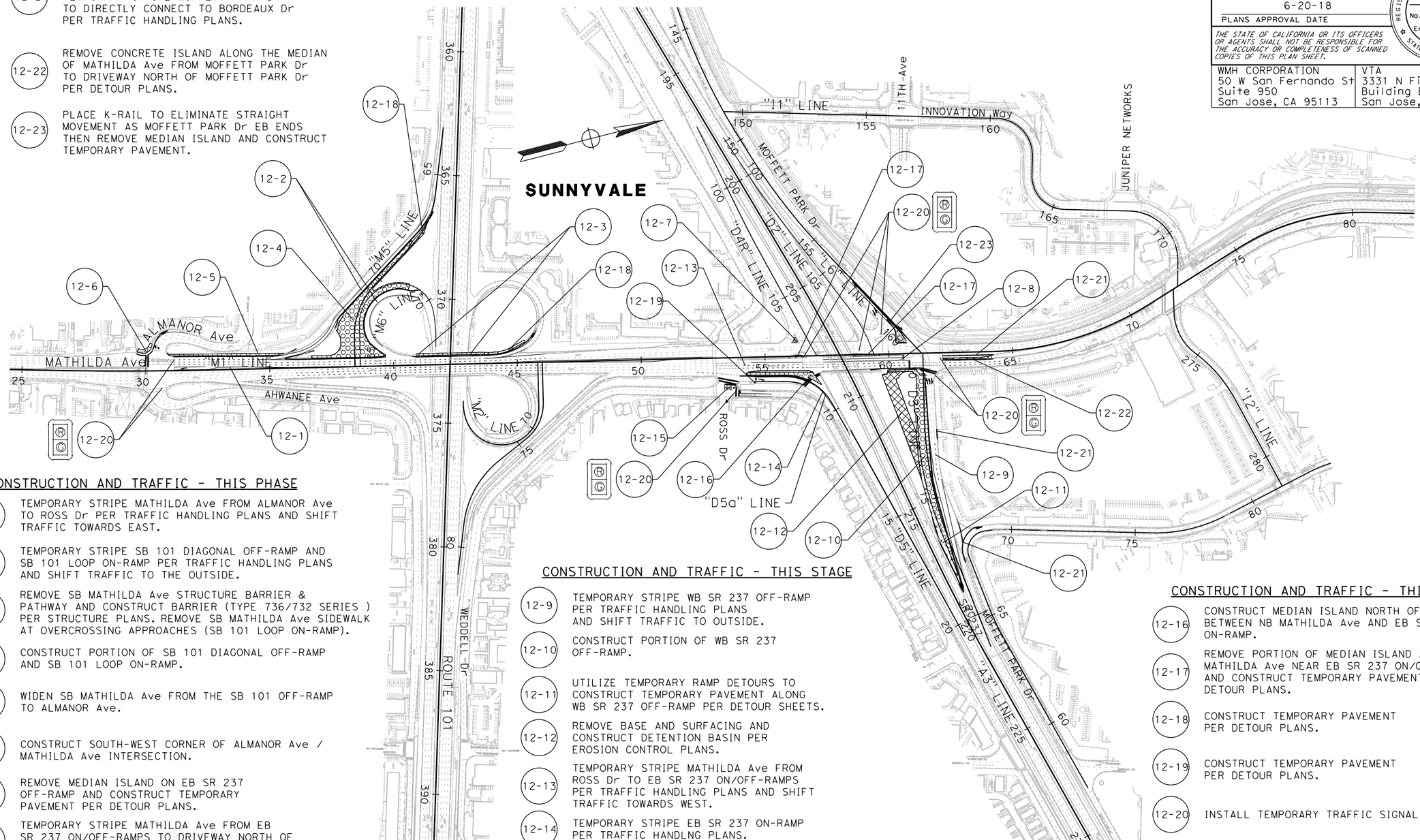

CONSTRUCTION AND TRAFFIC - THIS PHASE

(12-1) TEMPORARY STRIPE MATHILDA Ave FROM ALMANOR Ave TO ROSS Dr PER TRAFFIC HANDLING PLANS AND SHIFT TRAFFIC TOWARDS EAST.

(12-2) TEMPORARY STRIPE SB 101 DIAGONAL OFF-RAMP AND SB 101 LOOP ON-RAMP PER TRAFFIC HANDLING PLANS AND SHIFT TRAFFIC TO THE OUTSIDE.

(12-3) REMOVE SB MATHILDA Ave STRUCTURE BARRIER & PATHWAY AND CONSTRUCT BARRIER (TYPE 736/732 SERIES) PER STRUCTURE PLANS. REMOVE SB MATHILDA Ave SIDEWALK AT OVERCROSSING APPROACHES (SB 101 LOOP ON-RAMP).

(12-4) CONSTRUCT PORTION OF SB 101 DIAGONAL OFF-RAMP AND SB 101 LOOP ON-RAMP.

(12-5) WIDEN SB MATHILDA Ave FROM THE SB 101 OFF-RAMP TO ALMANOR Ave.

(12-6) CONSTRUCT SOUTH-WEST CORNER OF ALMANOR Ave / MATHILDA Ave INTERSECTION.

(12-7) REMOVE MEDIAN ISLAND ON EB SR 237 OFF-RAMP AND CONSTRUCT TEMPORARY PAVEMENT PER DETOUR PLANS.

(12-8) TEMPORARY STRIPE MATHILDA Ave FROM EB SR 237 ON/OFF-RAMPS TO DRIVEWAY NORTH OF MOFFETT PARK Dr PER TRAFFIC HANDLING PLANS AND SHIFT TRAFFIC TOWARDS WEST.

FOR NOTES AND LEGEND, SEE SHEET SC-1

CONSTRUCTION AND TRAFFIC - THIS STAGE

(12-9) TEMPORARY STRIPE WB SR 237 OFF-RAMP PER TRAFFIC HANDLING PLANS AND SHIFT TRAFFIC TO OUTSIDE.

(12-10) CONSTRUCT PORTION OF WB SR 237 OFF-RAMP.

(12-11) UTILIZE TEMPORARY RAMP DETOURS TO CONSTRUCT TEMPORARY PAVEMENT ALONG WB SR 237 OFF-RAMP PER DETOUR SHEETS.

(12-12) REMOVE BASE AND SURFACING AND CONSTRUCT DETENTION BASIN PER EROSION CONTROL PLANS.

(12-13) TEMPORARY STRIPE MATHILDA Ave FROM ROSS Dr TO EB SR 237 ON/OFF-RAMPS PER TRAFFIC HANDLING PLANS AND SHIFT TRAFFIC TOWARDS WEST.

(12-14) TEMPORARY STRIPE EB SR 237 ON-RAMP PER TRAFFIC HANDLNG PLANS.

(12-15) STRIPE ROSS Dr AND PERSIAN Dr INTERSECTION PER PAVEMENT DELINEATION PLANS.

CONSTRUCTION AND TRAFFIC - THIS STAGE

(12-16) CONSTRUCT MEDIAN ISLAND NORTH OF ROSS Dr BETWEEN NB MATHILDA Ave AND EB SR 237 ON-RAMP.

(12-17) REMOVE PORTION OF MEDIAN ISLAND ALONG MATHILDA Ave NEAR EB SR 237 ON/OFF-RAMPS AND CONSTRUCT TEMPORARY PAVEMENT PER DETOUR PLANS.

(12-18) CONSTRUCT TEMPORARY PAVEMENT PER DETOUR PLANS.

(12-19) CONSTRUCT TEMPORARY PAVEMENT PER DETOUR PLANS.

(12-20) INSTALL TEMPORARY TRAFFIC SIGNAL.

DETOURS - THIS PHASE

(SEE NOTE 6)
A, B, F, & H

APPROVED FOR STAGE CONSTRUCTION WORK ONLY

STAGE CONSTRUCTION
STAGE 1 - PHASE 2

NO SCALE

SC-2

REVISED BY	DATE REVISED
SCV	01/5/18

CALCULATED-DESIGNED BY: CARLOS RODRIGUEZ
CHECKED BY: SHAWN VOGTMAN
SUPERVISOR: TIMOTHY J. LEE
CONSULTANT FUNCTIONAL SUPERVISOR: TIMOTHY J. LEE

STATE OF CALIFORNIA - DEPARTMENT OF TRANSPORTATION
Caltrans

LAST REVISION 01-15-18 | DATE PLOTTED => 12/3/2018 | TIME PLOTTED => 12:21:51 PM

X:\237_101_Mathilda\000_CAD\Sheets\000_Submittals\Conformed Plans\0413000204ma002.dgn

BORDER LAST REVISED 7/2/2010 | USERNAME => eilif | DGN FILE => 0413000204ma002.dgn | RELATIVE BORDER SCALE IS IN INCHES 0 1 2 3 | UNIT 0000 | PROJECT NUMBER & PHASE 0413000204

Dist	COUNTY	ROUTE	POST MILES TOTAL PROJECT	SHEET No.	TOTAL SHEETS
04	SCL	101,237	45.2/45.8, 2.7/3.3	177	736

REGISTERED CIVIL ENGINEER 6-13-18 DATE

6-20-18
PLANS APPROVAL DATE

REGISTERED PROFESSIONAL ENGINEER STEVE LOUPE No. 63575 Exp. 9/30/18 CIVIL STATE OF CALIFORNIA

THE STATE OF CALIFORNIA OR ITS OFFICERS OR AGENTS SHALL NOT BE RESPONSIBLE FOR THE ACCURACY OR COMPLETENESS OF SCANNED COPIES OF THIS PLAN SHEET.

WMH CORPORATION
50 W San Fernando St
Suite 950
San Jose, CA 95113

VTA
3331 N First St
Building B
San Jose, Ca 95134

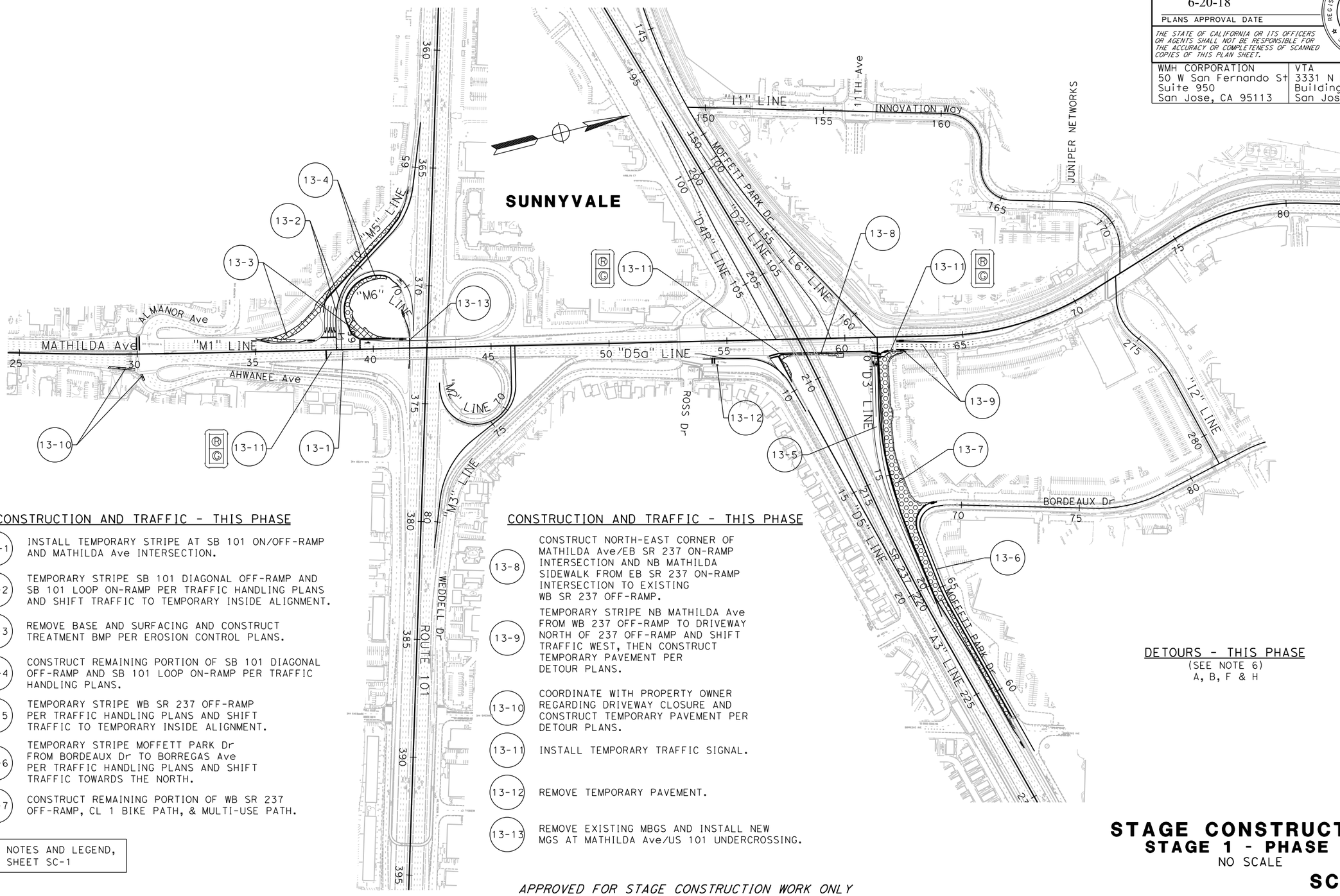

CONSTRUCTION AND TRAFFIC - THIS PHASE

13-1 INSTALL TEMPORARY STRIPE AT SB 101 ON/OFF-RAMP AND MATHILDA Ave INTERSECTION.

13-2 TEMPORARY STRIPE SB 101 DIAGONAL OFF-RAMP AND SB 101 LOOP ON-RAMP PER TRAFFIC HANDLING PLANS AND SHIFT TRAFFIC TO TEMPORARY INSIDE ALIGNMENT.

13-3 REMOVE BASE AND SURFACING AND CONSTRUCT TREATMENT BMP PER EROSION CONTROL PLANS.

13-4 CONSTRUCT REMAINING PORTION OF SB 101 DIAGONAL OFF-RAMP AND SB 101 LOOP ON-RAMP PER TRAFFIC HANDLING PLANS.

13-5 TEMPORARY STRIPE WB SR 237 OFF-RAMP PER TRAFFIC HANDLING PLANS AND SHIFT TRAFFIC TO TEMPORARY INSIDE ALIGNMENT.

13-6 TEMPORARY STRIPE MOFFETT PARK Dr FROM BORDEAUX Dr TO BORREGAS Ave PER TRAFFIC HANDLING PLANS AND SHIFT TRAFFIC TOWARDS THE NORTH.

13-7 CONSTRUCT REMAINING PORTION OF WB SR 237 OFF-RAMP, CL 1 BIKE PATH, & MULTI-USE PATH.

FOR NOTES AND LEGEND, SEE SHEET SC-1

CONSTRUCTION AND TRAFFIC - THIS PHASE

13-8 CONSTRUCT NORTH-EAST CORNER OF MATHILDA Ave/EB SR 237 ON-RAMP INTERSECTION AND NB MATHILDA SIDEWALK FROM EB SR 237 ON-RAMP INTERSECTION TO EXISTING WB SR 237 OFF-RAMP.

13-9 TEMPORARY STRIPE NB MATHILDA Ave FROM WB 237 OFF-RAMP TO DRIVEWAY NORTH OF 237 OFF-RAMP AND SHIFT TRAFFIC WEST, THEN CONSTRUCT TEMPORARY PAVEMENT PER DETOUR PLANS.

13-10 COORDINATE WITH PROPERTY OWNER REGARDING DRIVEWAY CLOSURE AND CONSTRUCT TEMPORARY PAVEMENT PER DETOUR PLANS.

13-11 INSTALL TEMPORARY TRAFFIC SIGNAL.

13-12 REMOVE TEMPORARY PAVEMENT.

13-13 REMOVE EXISTING MBGS AND INSTALL NEW MGS AT MATHILDA Ave/US 101 UNDERCROSSING.

DETOURS - THIS PHASE

(SEE NOTE 6)
A, B, F & H

APPROVED FOR STAGE CONSTRUCTION WORK ONLY

STAGE CONSTRUCTION
STAGE 1 - PHASE 3
NO SCALE

SC-3

STATE OF CALIFORNIA - DEPARTMENT OF TRANSPORTATION
Caltrans

CONSULTANT FUNCTIONAL SUPERVISOR: TIMOTHY J. LEE
CALCULATED-DESIGNED BY: CARLOS RODRIGUEZ
CHECKED BY: SHAWN VOGTMAN
REVISED BY: SCV
DATE REVISED: 01/5/18

X:\237_101_Mathilda\000_CAD\Sheets\MA-Stage_Const\MA-Plans\0413000204ma003.dgn

LAST REVISION 01-15-18
DATE PLOTTED => 6/20/2018
TIME PLOTTED => 11:13:33 AM

Dist	COUNTY	ROUTE	POST MILES TOTAL PROJECT	SHEET No.	TOTAL SHEETS
04	SCL	101,237	45.2/45.8, 2.7/3.3	178	736

REGISTERED CIVIL ENGINEER — 6-13-18 DATE

6-20-18
PLANS APPROVAL DATE

REGISTERED PROFESSIONAL ENGINEER — STEVE LOUPE — No. 63575 — Exp. 9/30/18 — CIVIL — STATE OF CALIFORNIA

THE STATE OF CALIFORNIA OR ITS OFFICERS OR AGENTS SHALL NOT BE RESPONSIBLE FOR THE ACCURACY OR COMPLETENESS OF SCANNED COPIES OF THIS PLAN SHEET.

WMH CORPORATION 50 W San Fernando St Suite 950 San Jose, CA 95113	VTA 3331 N First St Building B San Jose, Ca 95134

REVISED BY	DATE REVISED
SCV	01/5/18

CALCULATED-DESIGNED BY: CARLOS RODRIGUEZ
CHECKED BY: SHAWN VOGTMAN

TIMOTHY J. LEE
CONSULTANT FUNCTIONAL SUPERVISOR

STATE OF CALIFORNIA - DEPARTMENT OF TRANSPORTATION
Caltrans

X:\237_101_Mathilde\000_CAD\Sheets\MA-Stage_Const\MA-Plans\0413000204ma004.dgn

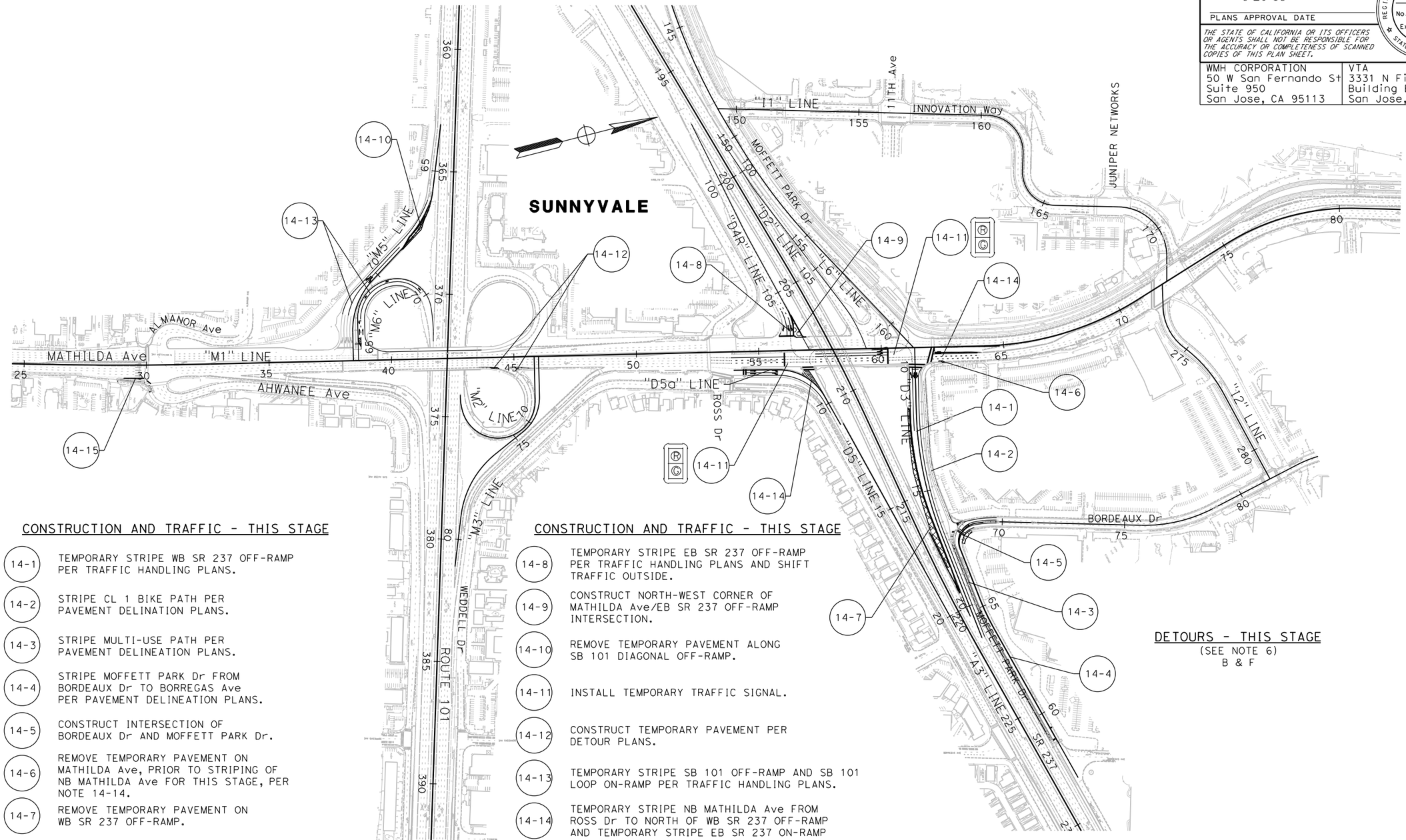

CONSTRUCTION AND TRAFFIC - THIS STAGE

- 14-1 TEMPORARY STRIPE WB SR 237 OFF-RAMP PER TRAFFIC HANDLING PLANS.
- 14-2 STRIPE CL 1 BIKE PATH PER PAVEMENT DELINATION PLANS.
- 14-3 STRIPE MULTI-USE PATH PER PAVEMENT DELINEATION PLANS.
- 14-4 STRIPE MOFFETT PARK Dr FROM BORDEAUX Dr TO BORREGAS Ave PER PAVEMENT DELINEATION PLANS.
- 14-5 CONSTRUCT INTERSECTION OF BORDEAUX Dr AND MOFFETT PARK Dr.
- 14-6 REMOVE TEMPORARY PAVEMENT ON MATHILDA Ave, PRIOR TO STRIPING OF NB MATHILDA Ave FOR THIS STAGE, PER NOTE 14-14.
- 14-7 REMOVE TEMPORARY PAVEMENT ON WB SR 237 OFF-RAMP.

FOR NOTES AND LEGEND, SEE SHEET SC-1

CONSTRUCTION AND TRAFFIC - THIS STAGE

- 14-8 TEMPORARY STRIPE EB SR 237 OFF-RAMP PER TRAFFIC HANDLING PLANS AND SHIFT TRAFFIC OUTSIDE.
- 14-9 CONSTRUCT NORTH-WEST CORNER OF MATHILDA Ave/EB SR 237 OFF-RAMP INTERSECTION.
- 14-10 REMOVE TEMPORARY PAVEMENT ALONG SB 101 DIAGONAL OFF-RAMP.
- 14-11 INSTALL TEMPORARY TRAFFIC SIGNAL.
- 14-12 CONSTRUCT TEMPORARY PAVEMENT PER DETOUR PLANS.
- 14-13 TEMPORARY STRIPE SB 101 OFF-RAMP AND SB 101 LOOP ON-RAMP PER TRAFFIC HANDLING PLANS.
- 14-14 TEMPORARY STRIPE NB MATHILDA Ave FROM ROSS Dr TO NORTH OF WB SR 237 OFF-RAMP AND TEMPORARY STRIPE EB SR 237 ON-RAMP PER TRAFFIC HANDLING PLANS.
- 14-15 PLACE K-RAIL ALONG TEMPORARY PAVEMENT.

DETOURS - THIS STAGE

(SEE NOTE 6)
B & F

APPROVED FOR STAGE CONSTRUCTION WORK ONLY

STAGE CONSTRUCTION
STAGE 1 - PHASE 4
NO SCALE

SC-4

LAST REVISION: DATE PLOTTED => 6/20/2018
01-15-18 TIME PLOTTED => 11:13:37 AM

BORDER LAST REVISED 7/2/2010 | USERNAME => Eilif | DGN FILE => 0413000204ma004.dgn | RELATIVE BORDER SCALE IS IN INCHES 0 1 2 3 | UNIT 0000 | PROJECT NUMBER & PHASE 0413000204

Dist	COUNTY	ROUTE	POST MILES TOTAL PROJECT	SHEET No.	TOTAL SHEETS
04	SCL	101,237	45.2/45.8, 2.7/3.3	179	736

REGISTERED CIVIL ENGINEER — 6-13-18 DATE

6-20-18
PLANS APPROVAL DATE

STEVE LOUPE No. 63575 Exp. 9/30/18 CIVIL — REGISTERED PROFESSIONAL ENGINEER — STATE OF CALIFORNIA

THE STATE OF CALIFORNIA OR ITS OFFICERS OR AGENTS SHALL NOT BE RESPONSIBLE FOR THE ACCURACY OR COMPLETENESS OF SCANNED COPIES OF THIS PLAN SHEET.

WMH CORPORATION
50 W San Fernando St
Suite 950
San Jose, CA 95113

VTA
3331 N First St
Building B
San Jose, Ca 95134

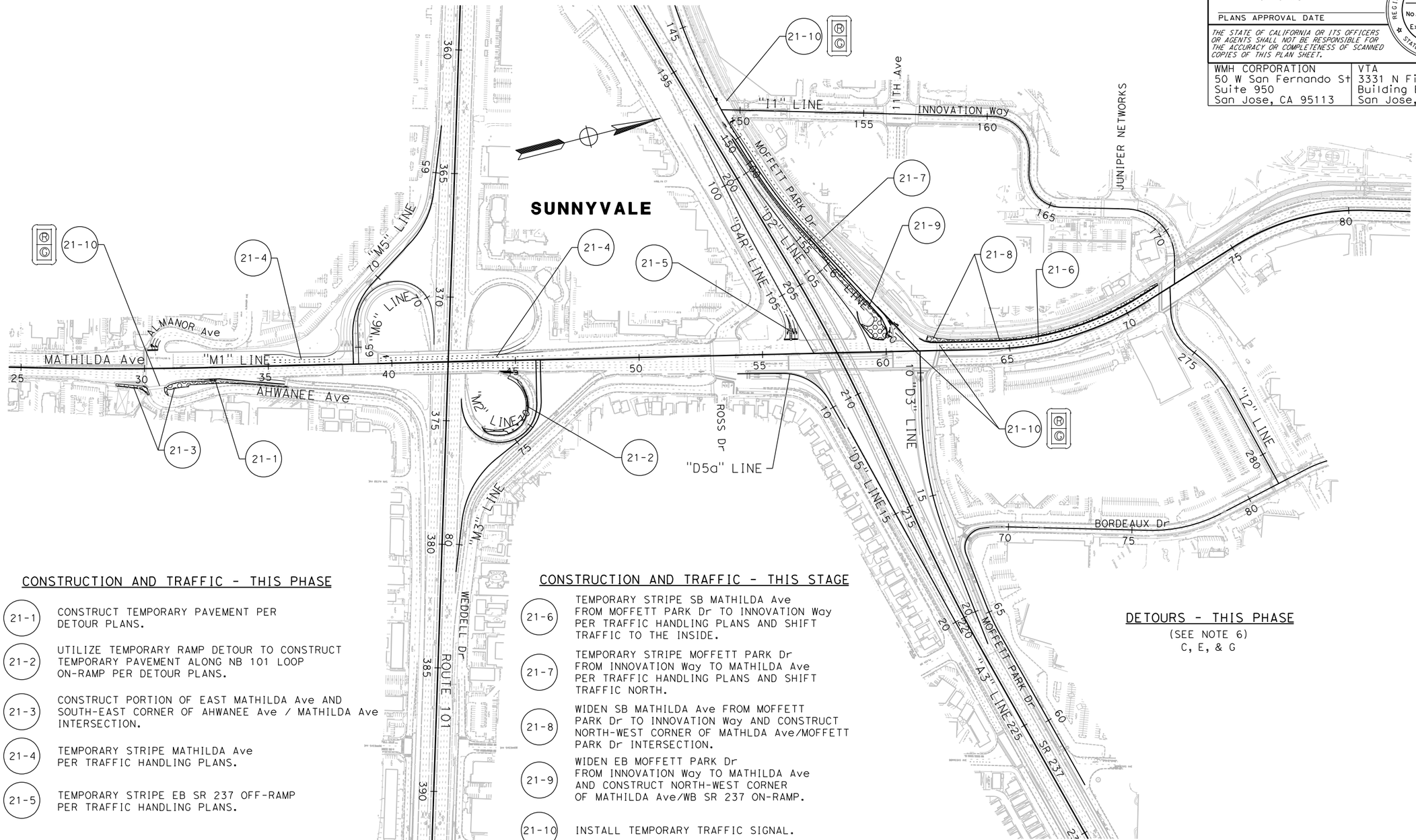

CONSTRUCTION AND TRAFFIC - THIS PHASE

- (21-1) CONSTRUCT TEMPORARY PAVEMENT PER DETOUR PLANS.
- (21-2) UTILIZE TEMPORARY RAMP DETOUR TO CONSTRUCT TEMPORARY PAVEMENT ALONG NB 101 LOOP ON-RAMP PER DETOUR PLANS.
- (21-3) CONSTRUCT PORTION OF EAST MATHILDA Ave AND SOUTH-EAST CORNER OF AHWANEE Ave / MATHILDA Ave INTERSECTION.
- (21-4) TEMPORARY STRIPE MATHILDA Ave PER TRAFFIC HANDLING PLANS.
- (21-5) TEMPORARY STRIPE EB SR 237 OFF-RAMP PER TRAFFIC HANDLING PLANS.

CONSTRUCTION AND TRAFFIC - THIS STAGE

- (21-6) TEMPORARY STRIPE SB MATHILDA Ave FROM MOFFETT PARK Dr TO INNOVATION Way PER TRAFFIC HANDLING PLANS AND SHIFT TRAFFIC TO THE INSIDE.
- (21-7) TEMPORARY STRIPE MOFFETT PARK Dr FROM INNOVATION Way TO MATHILDA Ave PER TRAFFIC HANDLING PLANS AND SHIFT TRAFFIC NORTH.
- (21-8) WIDEN SB MATHILDA Ave FROM MOFFETT PARK Dr TO INNOVATION Way AND CONSTRUCT NORTH-WEST CORNER OF MATHLDA Ave/MOFFETT PARK Dr INTERSECTION.
- (21-9) WIDEN EB MOFFETT PARK Dr FROM INNOVATION Way TO MATHILDA Ave AND CONSTRUCT NORTH-WEST CORNER OF MATHILDA Ave/WB SR 237 ON-RAMP.
- (21-10) INSTALL TEMPORARY TRAFFIC SIGNAL.

DETOURS - THIS PHASE

(SEE NOTE 6)
C, E, & G

FOR NOTES AND LEGEND, SEE SHEET SC-1

APPROVED FOR STAGE CONSTRUCTION WORK ONLY

STAGE CONSTRUCTION
STAGE 2 - PHASE 1
NO SCALE

SC-5

	CALCULATED-DESIGNED BY	REVISED BY	SCV
	CHECKED BY	DATE REVISED	01/5/18
SUPERVISOR	CARLOS RODRIGUEZ	SHAWN VOGTMAN	
CONSULTANT FUNCTIONAL	TIMOTHY J. LEE		

STATE OF CALIFORNIA - DEPARTMENT OF TRANSPORTATION — Caltrans

LAST REVISION 01-15-18 | DATE PLOTTED => 6/20/2018 | TIME PLOTTED => 11:13:42 AM

X:\237_101_Mathilda\000_CAD\Sheets\MA-Stage_Const\MA-Plans\0413000204ma005.dgn

Dist	COUNTY	ROUTE	POST MILES TOTAL PROJECT	SHEET No.	TOTAL SHEETS
04	SCL	101,237	45.2/45.8, 2.7/3.3	180	736

6-13-18
REGISTERED CIVIL ENGINEER — DATE

STEVE LOUPE No. 63575 Exp. 9/30/18 CIVIL — REGISTERED PROFESSIONAL ENGINEER — STATE OF CALIFORNIA

6-20-18
PLANS APPROVAL DATE

THE STATE OF CALIFORNIA OR ITS OFFICERS OR AGENTS SHALL NOT BE RESPONSIBLE FOR THE ACCURACY OR COMPLETENESS OF SCANNED COPIES OF THIS PLAN SHEET.

WMH CORPORATION 50 W San Fernando St Suite 950 San Jose, CA 95113	VTA 3331 N First St Building B San Jose, Ca 95134

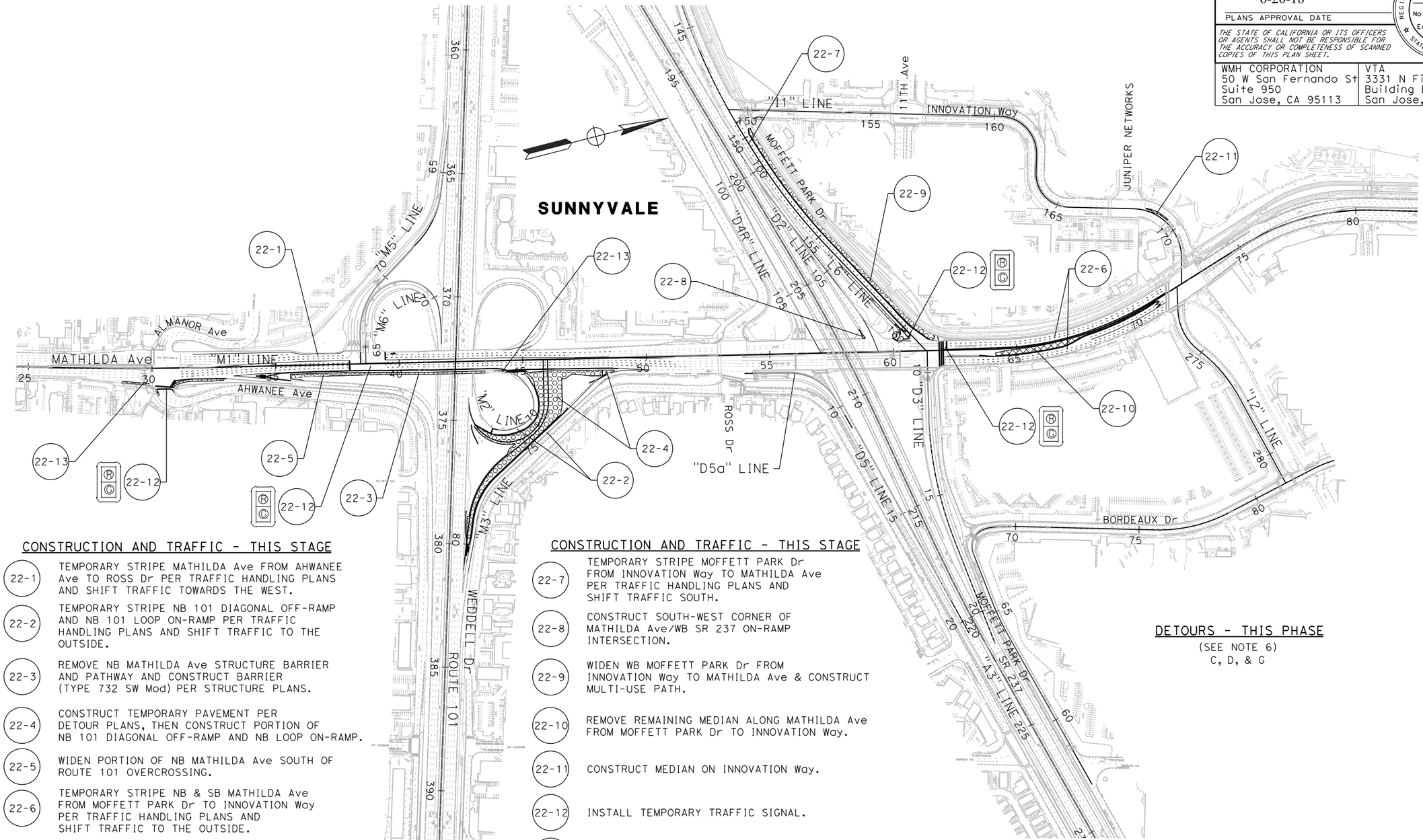

CONSTRUCTION AND TRAFFIC - THIS STAGE

(22-1) TEMPORARY STRIPE MATHILDA Ave FROM AHWANEE Ave TO ROSS Dr PER TRAFFIC HANDLING PLANS AND SHIFT TRAFFIC TOWARDS THE WEST.

(22-2) TEMPORARY STRIPE NB 101 DIAGONAL OFF-RAMP AND NB 101 LOOP ON-RAMP PER TRAFFIC HANDLING PLANS AND SHIFT TRAFFIC TO THE OUTSIDE.

(22-3) REMOVE NB MATHILDA Ave STRUCTURE BARRIER AND PATHWAY AND CONSTRUCT BARRIER (TYPE 732 SW Mod) PER STRUCTURE PLANS.

(22-4) CONSTRUCT TEMPORARY PAVEMENT PER DETOUR PLANS, THEN CONSTRUCT PORTION OF NB 101 DIAGONAL OFF-RAMP AND NB LOOP ON-RAMP.

(22-5) WIDEN PORTION OF NB MATHILDA Ave SOUTH OF ROUTE 101 OVERCROSSING.

(22-6) TEMPORARY STRIPE NB & SB MATHILDA Ave FROM MOFFETT PARK Dr TO INNOVATION Way PER TRAFFIC HANDLING PLANS AND SHIFT TRAFFIC TO THE OUTSIDE.

FOR NOTES AND LEGEND, SEE SHEET SC-1

CONSTRUCTION AND TRAFFIC - THIS STAGE

(22-7) TEMPORARY STRIPE MOFFETT PARK Dr FROM INNOVATION Way TO MATHILDA Ave PER TRAFFIC HANDLING PLANS AND SHIFT TRAFFIC SOUTH.

(22-8) CONSTRUCT SOUTH-WEST CORNER OF MATHILDA Ave/WB SR 237 ON-RAMP INTERSECTION.

(22-9) WIDEN WB MOFFETT PARK Dr FROM INNOVATION Way TO MATHILDA Ave & CONSTRUCT MULTI-USE PATH.

(22-10) REMOVE REMAINING MEDIAN ALONG MATHILDA Ave FROM MOFFETT PARK Dr TO INNOVATION Way.

(22-11) CONSTRUCT MEDIAN ON INNOVATION Way.

(22-12) INSTALL TEMPORARY TRAFFIC SIGNAL.

(22-13) REMOVE TEMPORARY PAVEMENT.

DETOURS - THIS PHASE

(SEE NOTE 6)
C, D, & G

APPROVED FOR STAGE CONSTRUCTION WORK ONLY

STAGE CONSTRUCTION
STAGE 2 - PHASE 2
NO SCALE

SC-6

CALCULATED-DESIGNED BY	CARLOS RODRIGUEZ	REVISED BY	SCV
CHECKED BY	SHAWN VOGTMAN	DATE REVISED	01/5/18
SUPERVISOR	TIMOTHY J. LEE		
CONSULTANT FUNCTIONAL SUPERVISOR			

STATE OF CALIFORNIA - DEPARTMENT OF TRANSPORTATION — Caltrans®

X:\237_101_Mathilda\000_CAD\Sheets\MA-Stage_Const\MA-Plans\0413000204ma006.dgn

LAST REVISION: DATE PLOTTED => 6/20/2018; 01-15-18 TIME PLOTTED => 11:13:47 AM

BORDER LAST REVISED 7/2/2010	USERNAME => Eilif DGN FILE => 0413000204ma006.dgn	RELATIVE BORDER SCALE IS IN INCHES 0 1 2 3	UNIT 0000	PROJECT NUMBER & PHASE	0413000204

Dist	COUNTY	ROUTE	POST MILES TOTAL PROJECT	SHEET No.	TOTAL SHEETS
04	SCL	101,237	45.2/45.8, 2.7/3.3	181	736

6-13-18
REGISTERED CIVIL ENGINEER — DATE

6-20-18
PLANS APPROVAL DATE

REGISTERED PROFESSIONAL ENGINEER — STEVE LOUPE — No. 63575 — Exp. 9/30/18 — CIVIL — STATE OF CALIFORNIA

THE STATE OF CALIFORNIA OR ITS OFFICERS OR AGENTS SHALL NOT BE RESPONSIBLE FOR THE ACCURACY OR COMPLETENESS OF SCANNED COPIES OF THIS PLAN SHEET.

WMH CORPORATION
50 W San Fernando St
Suite 950
San Jose, CA 95113

VTA
3331 N First St
Building B
San Jose, Ca 95134

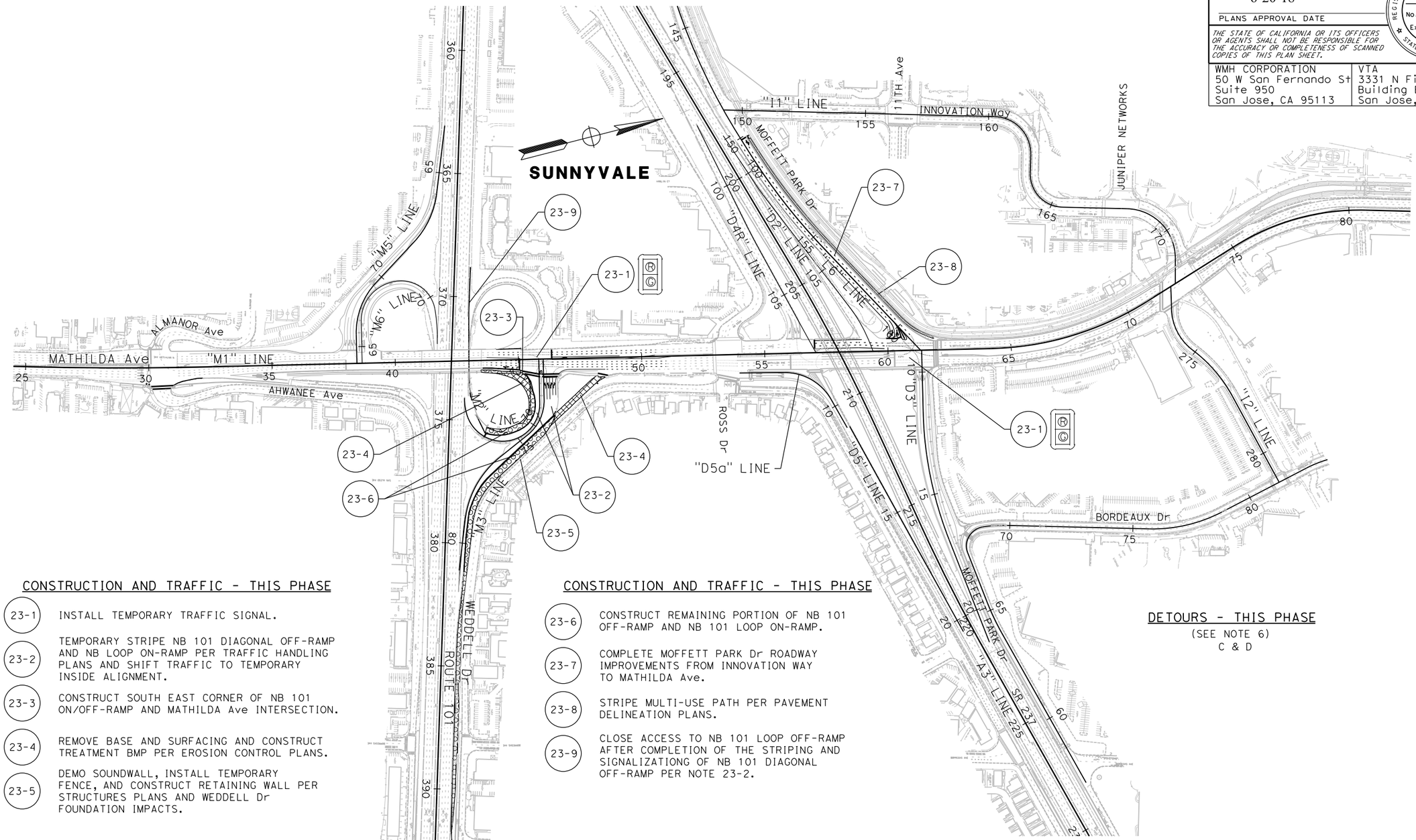

CONSTRUCTION AND TRAFFIC - THIS PHASE

(23-1) INSTALL TEMPORARY TRAFFIC SIGNAL.

(23-2) TEMPORARY STRIPE NB 101 DIAGONAL OFF-RAMP AND NB LOOP ON-RAMP PER TRAFFIC HANDLING PLANS AND SHIFT TRAFFIC TO TEMPORARY INSIDE ALIGNMENT.

(23-3) CONSTRUCT SOUTH EAST CORNER OF NB 101 ON/OFF-RAMP AND MATHILDA Ave INTERSECTION.

(23-4) REMOVE BASE AND SURFACING AND CONSTRUCT TREATMENT BMP PER EROSION CONTROL PLANS.

(23-5) DEMO SOUNDWALL, INSTALL TEMPORARY FENCE, AND CONSTRUCT RETAINING WALL PER STRUCTURES PLANS AND WEDDELL Dr FOUNDATION IMPACTS.

CONSTRUCTION AND TRAFFIC - THIS PHASE

(23-6) CONSTRUCT REMAINING PORTION OF NB 101 OFF-RAMP AND NB 101 LOOP ON-RAMP.

(23-7) COMPLETE MOFFETT PARK Dr ROADWAY IMPROVEMENTS FROM INNOVATION WAY TO MATHILDA Ave.

(23-8) STRIPE MULTI-USE PATH PER PAVEMENT DELINEATION PLANS.

(23-9) CLOSE ACCESS TO NB 101 LOOP OFF-RAMP AFTER COMPLETION OF THE STRIPING AND SIGNALIZATIONG OF NB 101 DIAGONAL OFF-RAMP PER NOTE 23-2.

DETOURS - THIS PHASE

(SEE NOTE 6)
C & D

FOR NOTES AND LEGEND, SEE SHEET SC-1

APPROVED FOR STAGE CONSTRUCTION WORK ONLY

STAGE CONSTRUCTION
STAGE 2 - PHASE 3
NO SCALE

SC-7

	REVISED BY	DATE REVISED
	SCV	01/5/18

CALCULATED-DESIGNED BY: CARLOS RODRIGUEZ
CHECKED BY: SHAWN VOGTMAN
CONSULTANT FUNCTIONAL SUPERVISOR: TIMOTHY J. LEE

STATE OF CALIFORNIA - DEPARTMENT OF TRANSPORTATION

X:\237_101_Mathilde\000_CAD\Sheets\MA-Stage_Const\MA-Plans\0413000204ma007.dgn

LAST REVISION 01-15-18 | DATE PLOTTED => 6/20/2018 | TIME PLOTTED => 11:13:51 AM

BORDER LAST REVISED 7/2/2010 | USERNAME => Eilif | DGN FILE => 0413000204ma007.dgn | RELATIVE BORDER SCALE IS IN INCHES 0 1 2 3 | UNIT 0000 | PROJECT NUMBER & PHASE 0413000204

Dist	COUNTY	ROUTE	POST MILES TOTAL PROJECT	SHEET No.	TOTAL SHEETS
04	SCL	101,237	45.2/45.8, 2.7/3.3	182	736

REGISTERED CIVIL ENGINEER — 6-13-18 DATE

6-20-18
PLANS APPROVAL DATE

REGISTERED PROFESSIONAL ENGINEER — STEVE LOUPE — No. 63575 — Exp. 9/30/18 — CIVIL — STATE OF CALIFORNIA

THE STATE OF CALIFORNIA OR ITS OFFICERS OR AGENTS SHALL NOT BE RESPONSIBLE FOR THE ACCURACY OR COMPLETENESS OF SCANNED COPIES OF THIS PLAN SHEET.

WMH CORPORATION 50 W San Fernando St Suite 950 San Jose, CA 95113	VTA 3331 N First St Building B San Jose, Ca 95134

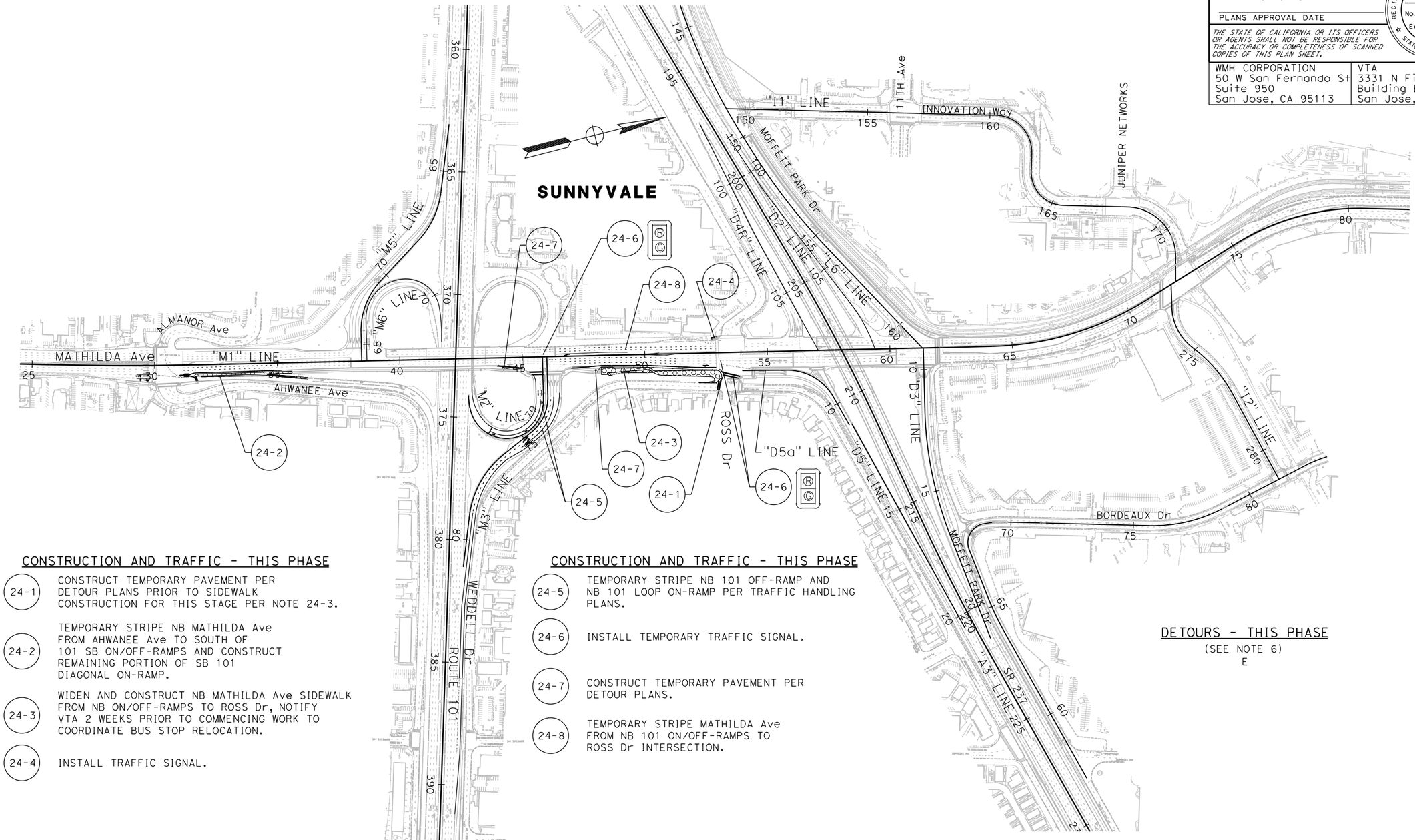

CONSTRUCTION AND TRAFFIC - THIS PHASE

(24-1) CONSTRUCT TEMPORARY PAVEMENT PER DETOUR PLANS PRIOR TO SIDEWALK CONSTRUCTION FOR THIS STAGE PER NOTE 24-3.

(24-2) TEMPORARY STRIPE NB MATHILDA Ave FROM AHWANEE Ave TO SOUTH OF 101 SB ON/OFF-RAMPS AND CONSTRUCT REMAINING PORTION OF SB 101 DIAGONAL ON-RAMP.

(24-3) WIDEN AND CONSTRUCT NB MATHILDA Ave SIDEWALK FROM NB ON/OFF-RAMPS TO ROSS Dr, NOTIFY VTA 2 WEEKS PRIOR TO COMMENCING WORK TO COORDINATE BUS STOP RELOCATION.

(24-4) INSTALL TRAFFIC SIGNAL.

CONSTRUCTION AND TRAFFIC - THIS PHASE

(24-5) TEMPORARY STRIPE NB 101 OFF-RAMP AND NB 101 LOOP ON-RAMP PER TRAFFIC HANDLING PLANS.

(24-6) INSTALL TEMPORARY TRAFFIC SIGNAL.

(24-7) CONSTRUCT TEMPORARY PAVEMENT PER DETOUR PLANS.

(24-8) TEMPORARY STRIPE MATHILDA Ave FROM NB 101 ON/OFF-RAMPS TO ROSS Dr INTERSECTION.

DETOURS - THIS PHASE

(SEE NOTE 6)
E

FOR NOTES AND LEGEND, SEE SHEET SC-1

APPROVED FOR STAGE CONSTRUCTION WORK ONLY

STAGE CONSTRUCTION
STAGE 2 - PHASE 4
NO SCALE

SC-8

CALCULATED-DESIGNED BY	CARLOS RODRIGUEZ	REVISED BY	SCV
CHECKED BY	SHAWN VOGTMAN	DATE REVISED	01/5/18
DISTRICT SUPERVISOR	TIMOTHY J. LEE		
STATE OF CALIFORNIA - DEPARTMENT OF TRANSPORTATION	CONSULTANT FUNCTIONAL SUPERVISOR		

LAST REVISION 01-15-18 | DATE PLOTTED => 6/20/2018 | TIME PLOTTED => 11:13:57 AM

X:\237_101_Mathilda\000_CAD\Sheets\MA-Stage_Const-MA-Plans\0413000204ma008.dgn

BORDER LAST REVISED 7/2/2010 | USERNAME => Eilif | DGN FILE => 0413000204ma008.dgn | RELATIVE BORDER SCALE IS IN INCHES 0 1 2 3 | UNIT 0000 | PROJECT NUMBER & PHASE 0413000204

Dist	COUNTY	ROUTE	POST MILES TOTAL PROJECT	SHEET No.	TOTAL SHEETS
04	SCL	101,237	45.2/45.8, 2.7/3.3	183	736

REGISTERED CIVIL ENGINEER — 6-13-18 DATE

6-20-18
PLANS APPROVAL DATE

STEVE LOUPE No. 63575 Exp. 9/30/18 CIVIL — REGISTERED PROFESSIONAL ENGINEER — STATE OF CALIFORNIA

THE STATE OF CALIFORNIA OR ITS OFFICERS OR AGENTS SHALL NOT BE RESPONSIBLE FOR THE ACCURACY OR COMPLETENESS OF SCANNED COPIES OF THIS PLAN SHEET.

WMH CORPORATION
50 W San Fernando St
Suite 950
San Jose, CA 95113

VTA
3331 N First St
Building B
San Jose, Ca 95134

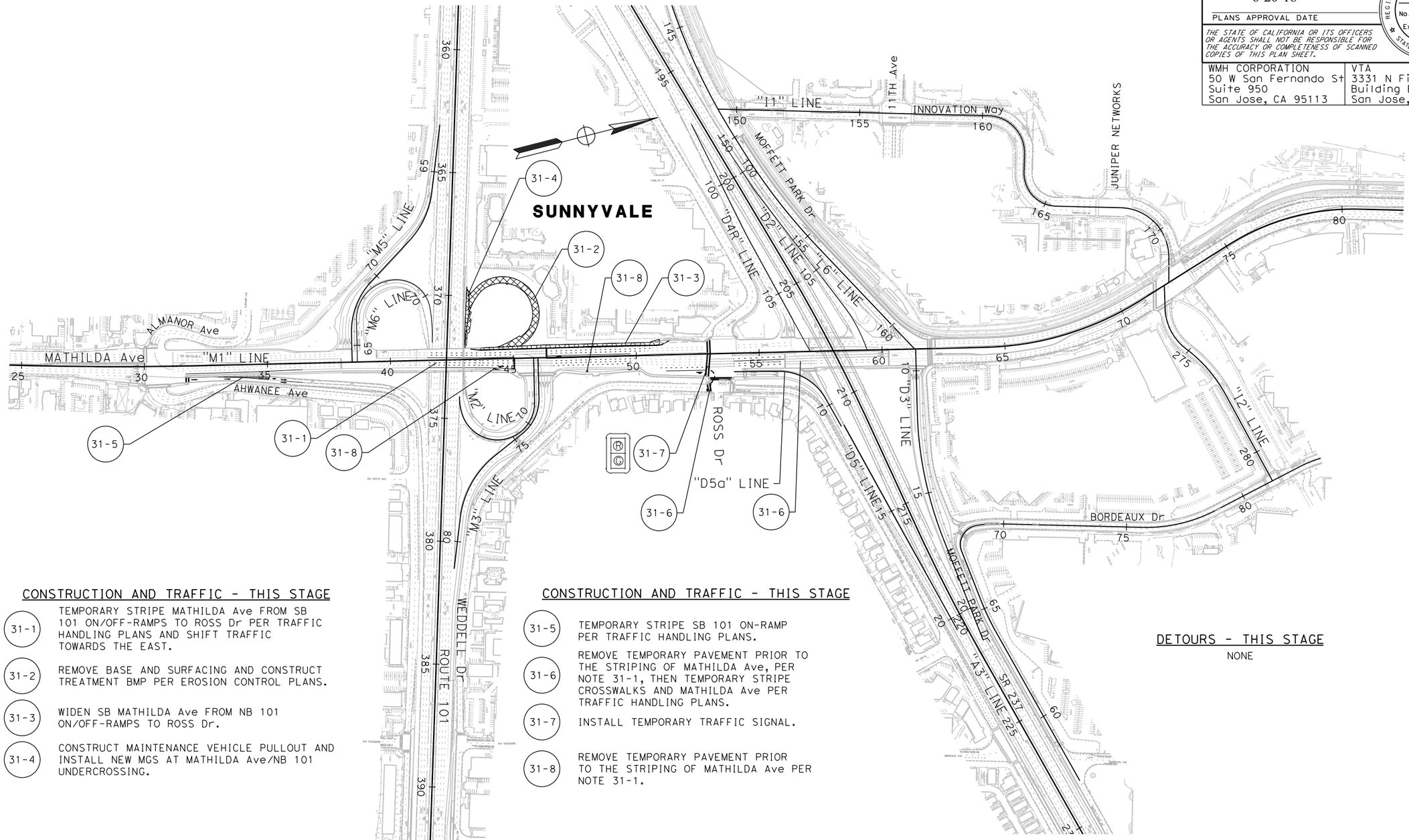

CONSTRUCTION AND TRAFFIC - THIS STAGE

(31-1) TEMPORARY STRIPE MATHILDA Ave FROM SB 101 ON/OFF-RAMPS TO ROSS Dr PER TRAFFIC HANDLING PLANS AND SHIFT TRAFFIC TOWARDS THE EAST.

(31-2) REMOVE BASE AND SURFACING AND CONSTRUCT TREATMENT BMP PER EROSION CONTROL PLANS.

(31-3) WIDEN SB MATHILDA Ave FROM NB 101 ON/OFF-RAMPS TO ROSS Dr.

(31-4) CONSTRUCT MAINTENANCE VEHICLE PULLOUT AND INSTALL NEW MGS AT MATHILDA Ave/NB 101 UNDERCROSSING.

CONSTRUCTION AND TRAFFIC - THIS STAGE

(31-5) TEMPORARY STRIPE SB 101 ON-RAMP PER TRAFFIC HANDLING PLANS.

(31-6) REMOVE TEMPORARY PAVEMENT PRIOR TO THE STRIPING OF MATHILDA Ave, PER NOTE 31-1, THEN TEMPORARY STRIPE CROSSWALKS AND MATHILDA Ave PER TRAFFIC HANDLING PLANS.

(31-7) INSTALL TEMPORARY TRAFFIC SIGNAL.

(31-8) REMOVE TEMPORARY PAVEMENT PRIOR TO THE STRIPING OF MATHILDA Ave PER NOTE 31-1.

DETOURS - THIS STAGE

NONE

FOR NOTES AND LEGEND, SEE SHEET SC-1

APPROVED FOR STAGE CONSTRUCTION WORK ONLY

STAGE CONSTRUCTION
STAGE 3 - PHASE 1
NO SCALE

SC-9

CALCULATED-DESIGNED BY	CARLOS RODRIGUEZ	REVISED BY	SCV
CHECKED BY	SHAWN VOGTMAN	DATE REVISED	01/5/18

PROJECT ENGINEER TIMOTHY J. LEE — CONSULTANT FUNCTIONAL SUPERVISOR

STATE OF CALIFORNIA - DEPARTMENT OF TRANSPORTATION — Caltrans

X:\237_101_Mathilde\000_CAD\Sheets\MA-Stage_Const\MA-Plans\0413000204ma009.dgn

LAST REVISION 01-15-18 — DATE PLOTTED => 6/20/2018 — TIME PLOTTED => 11:14:02 AM

BORDER LAST REVISED 7/2/2010 — USERNAME => Eilif — DGN FILE => 0413000204ma009.dgn — RELATIVE BORDER SCALE IS IN INCHES 0 1 2 3 — UNIT 0000 — PROJECT NUMBER & PHASE 0413000204

Dist	COUNTY	ROUTE	POST MILES TOTAL PROJECT	SHEET No.	TOTAL SHEETS
04	SCL	101,237	45.2/45.8, 2.7/3.3	184	736

REGISTERED CIVIL ENGINEER — 6-13-18 DATE

6-20-18
PLANS APPROVAL DATE

STEVE LOUPE No. 63575 Exp. 9/30/18 CIVIL — REGISTERED PROFESSIONAL ENGINEER — STATE OF CALIFORNIA

THE STATE OF CALIFORNIA OR ITS OFFICERS OR AGENTS SHALL NOT BE RESPONSIBLE FOR THE ACCURACY OR COMPLETENESS OF SCANNED COPIES OF THIS PLAN SHEET.

WMH CORPORATION
50 W San Fernando St
Suite 950
San Jose, CA 95113

VTA
3331 N First St
Building B
San Jose, Ca 95134

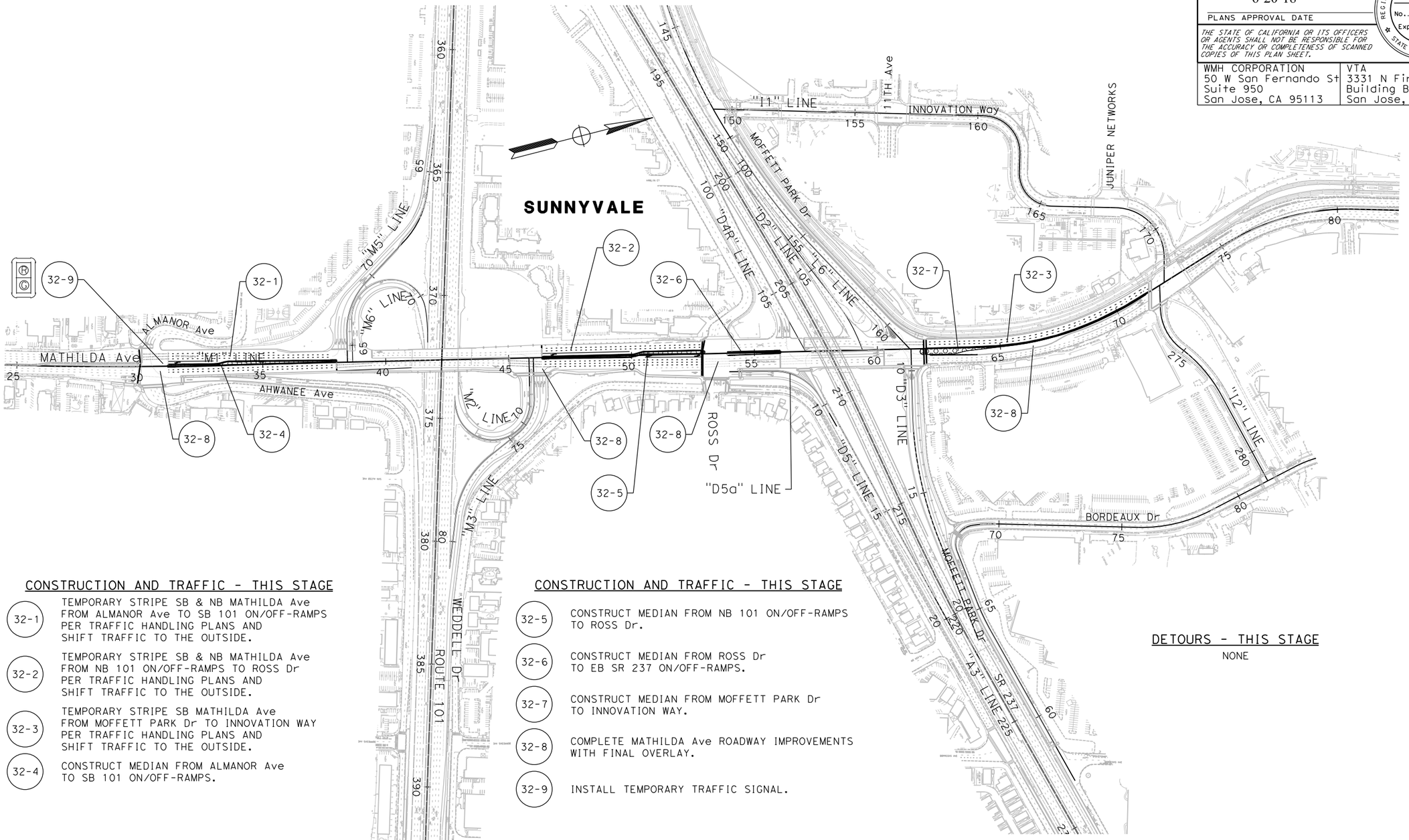

CONSTRUCTION AND TRAFFIC - THIS STAGE

(32-1) TEMPORARY STRIPE SB & NB MATHILDA Ave FROM ALMANOR Ave TO SB 101 ON/OFF-RAMPS PER TRAFFIC HANDLING PLANS AND SHIFT TRAFFIC TO THE OUTSIDE.

(32-2) TEMPORARY STRIPE SB & NB MATHILDA Ave FROM NB 101 ON/OFF-RAMPS TO ROSS Dr PER TRAFFIC HANDLING PLANS AND SHIFT TRAFFIC TO THE OUTSIDE.

(32-3) TEMPORARY STRIPE SB MATHILDA Ave FROM MOFFETT PARK Dr TO INNOVATION WAY PER TRAFFIC HANDLING PLANS AND SHIFT TRAFFIC TO THE OUTSIDE.

(32-4) CONSTRUCT MEDIAN FROM ALMANOR Ave TO SB 101 ON/OFF-RAMPS.

CONSTRUCTION AND TRAFFIC - THIS STAGE

(32-5) CONSTRUCT MEDIAN FROM NB 101 ON/OFF-RAMPS TO ROSS Dr.

(32-6) CONSTRUCT MEDIAN FROM ROSS Dr TO EB SR 237 ON/OFF-RAMPS.

(32-7) CONSTRUCT MEDIAN FROM MOFFETT PARK Dr TO INNOVATION WAY.

(32-8) COMPLETE MATHILDA Ave ROADWAY IMPROVEMENTS WITH FINAL OVERLAY.

(32-9) INSTALL TEMPORARY TRAFFIC SIGNAL.

DETOURS - THIS STAGE

NONE

FOR NOTES AND LEGEND, SEE SHEET SC-1

APPROVED FOR STAGE CONSTRUCTION WORK ONLY

STAGE CONSTRUCTION
STAGE 3 - PHASE 2
NO SCALE

SC-10

		REVISED BY	SCV
		DATE REVISED	01/5/18
CALCULATED-DESIGNED BY	CARLOS RODRIGUEZ		
CHECKED BY	SHAWN VOGTMAN		
DISTRICT SUPERVISOR	TIMOTHY J. LEE		
STATE OF CALIFORNIA - DEPARTMENT OF TRANSPORTATION		CONSULTANT FUNCTIONAL SUPERVISOR	

X:\237_101_Mathilda\000_CAD\Sheets\MA-Stage_Const-MA-Plans\0413000204ma010.dgn

LAST REVISION 01-15-18 | DATE PLOTTED => 6/20/2018 | TIME PLOTTED => 11:14:08 AM

BORDER LAST REVISED 7/2/2010 | USERNAME => Eilif | DGN FILE => 0413000204ma010.dgn | RELATIVE BORDER SCALE IS IN INCHES 0 1 2 3 | UNIT 0000 | PROJECT NUMBER & PHASE 0413000204

Dist	COUNTY	ROUTE	POST MILES TOTAL PROJECT	SHEET No.	TOTAL SHEETS
04	SCL	101,237	45.2/45.8, 2.7/3.3	185	736

REGISTERED CIVIL ENGINEER — DATE 6-13-18

PLANS APPROVAL DATE 6-20-18

REGISTERED PROFESSIONAL ENGINEER — STEVE LOUPE — No. 63575 — Exp. 9/30/18 — CIVIL — STATE OF CALIFORNIA

THE STATE OF CALIFORNIA OR ITS OFFICERS OR AGENTS SHALL NOT BE RESPONSIBLE FOR THE ACCURACY OR COMPLETENESS OF SCANNED COPIES OF THIS PLAN SHEET.

WMH CORPORATION
50 W San Fernando St
Suite 950
San Jose, CA 95113

VTA
3331 N First St
Building B
San Jose, Ca 95134

NOTES

1. FOR ACCURATE RIGHT OF WAY DATA, CONTACT RIGHT OF WAY ENGINEERING AT THE DISTRICT OFFICE.
2. UNLESS OTHERWISE NOTED, ALL TEMPORARY RAILING (TYPE K) SHALL BE NO CLOSER THAN 1 Ft FROM EDGE OF CONSTRUCION AREA. ANY TEMPORARY RAILING PLACED CLOSER THAN 2 Ft FROM EDGE OF CONSTRUCTION AREA SHALL BE DOWELLED TO PAVEMENT.
3. FOR LANE RESTRIPING WIDTH SEE TRAFFIC HANDLING PLANS.
4. UNLESS OTHERWISE NOTED, ALL APPROACH ENDS OF TEMPORARY RAILING (TYPE K) SHALL BE EITHER TAPERED 10:1 OR FLATTER WITH A 15 Ft MINIMUM OFFSET FROM ETW, PLACED BEHIND EXISTING RAILING OR BARRIER, OR PROTECTED BY A CRASH CUSHION.
5. A TYPE P MARKER PANEL SHALL BE INSTALLED AT THE ENDS AND AT THE ANGLE POINT OF EACH APPROACH TAPER OF TEMPORARY RAILING.
6. CONTRACTOR SHALL REMOVE ANY EXISTING CONFLICTING STRIPING, PAVEMENT MARKERS AND MARKINGS AND DELINEATORS.
7. EXISTING SIGNS NOT IN CONFLICT WITH STAGE CONSTRUCTION SHALL REMAIN OR AS DIRECTED BY THE ENGINEER.
8. ALL STATIONING OFFSETS TO TEMPORARY RAILINGS (TYPE K) CORRESPOND TO CENTERLINE OF RAILING.
9. LOCATIONS OF SIGNS ARE APPROXIMATE. EXACT LOCATIONS ARE TO BE DETERMINED BY THE ENGINEER.
10. SIGNS SHOWN TO BE RELOCATED ON TRAFFIC HANDLING PLANS ARE REQUIRED FOR STAGE CONSTRUCTION ONLY AND ARE ADDITIONAL TO RELOCATIONS SHOWN ON THE SIGN PLAN.
11. THE CONTRACTOR SHALL NOTIFY THE ENGINEER, IN WRITING, NOT LESS THAN 72 HOURS PRIOR TO COMMENCING PEDESTRIAN AND DRIVEWAY ACCESS IMPROVEMENTS. CONTRACTOR SHALL SCHEDULE HIS WORK SO THAT THE PEDESTRIAN OR DRIVEWAY ACCESS TO AN INDIVIDUAL PROPERTY ARE EACH CLOSED FOR A SINGLE, CONTINUOUS CLOSURE NOT EXCEEDING TWENTY FOUR (24) HOURS. NO MORE THAN ONE CLOSURE FOR EITHER PEDESTRIAN OR DRIVEWAY ACCESS SHALL BE GRANTED FOR ANY PROPERTY. FOR PROPERTIES WITH BOTH PEDESTRIAN AND DRIVEWAY ACCESS IMPROVEMENTS, THE CONTRACTOR SHALL STAGGER THE WORK SO THAT REASONABLE PEDESTRIAN AND DRIVEWAY ACCESS IS MAINTAINED AT ALL TIMES.
12. FOR NEW PAVEMENT STRUCTURAL SECTION, SEE TYPICAL CROSS SECTION PLANS.
13. FOR TEMPORARY PAVEMENT STRUCTURAL SECTION, SEE DETOUR PLANS.
14. FOR PAVEMENT DELINEATION REMOVAL LOCATIONS, SEE STAGE CONSTRUCTION PLANS.
15. FOR MEDIAN REMOVAL AND CONSTRUCTION, SEE STAGE CONSTRUCTION PLANS.
16. FOR TEMPORARY CONFORM DETAILS, SEE CONSTRUCTION DETAILS PLANS.
17. FOR CONSTRUCTION, TRAFFIC DETOURS, SHIFTS, AND PARTIAL LANE CLOSURES, SEE STAGE CONSTRUCTION AND DETOUR PLANS.
18. WORK HOURS SHALL COMPLY WITH SMC 16.08.030.
19. NO LANE CLOSURE ALONG MATHILDA AVENUE BETWEEN 6:00AM-10:00AM NORTHBOUND AND BETWEEN 3:30AM-7:30PM SOUTHBOUND.
20. MAINTAIN 5' MINIMUM PEDESTRIAN CLEARANCE WHERE SIDEWALK EXISTS.
21. ANY TRAFFIC SIGNAL MODIFICATION SHALL BE APPROVED BY THE CITY SENIOR TRAFFIC ENGINEER.
22. CONTRACTOR SHALL COORDINATE WITH THE CITY TRAFFIC SIGNAL CONTRACTOR FOR ANY TRAFFIC SIGNAL MODIFICATION. FEES INCURRED SHALL BE PAID BY THE CONTRACTOR.

ABBREVIATIONS

TCC(TXXX)	TEMPORARY CRASH CUSHION SAND FILLED (ARRAY TYPE)
TCT	TEMPORARY CONFORM (TRANSVERSE)
TCL	TEMPORARY CONFORM (LONGITUDINAL)
TACC	TEMPORARY ALTERNATIVE CRASH CUSHION
SMC	SURFACE MOUNTED CHANNELIZER

LEGEND

- CONSTRUCT ROADWAY (NEW STRUCTURAL SECTION)
- CONSTRUCT TEMPORARY PAVEMENT
- REMOVE THIS STAGE (OR PHASE)
- TEMPORARY RAILING (TYPE K)
- TYPE II BARRICADE
- TYPE III BARRICADE
- TRAFFIC DIRECTION
- CHANNELIZERS (SURFACE MOUNTED)
- CHANGE IN PAVEMENT DELINEATION DETAILS
- TEMPORARY CRASH CUSHION SAND FILLED
- TEMPORARY FENCE (TYPE CL-6)
- TYPE I ARROW
- TYPE II (R OR L) ARROW
- TYPE III (R OR L) ARROW
- TYPE III (B) ARROW
- TYPE IV (R OR L) ARROW
- TYPE V ARROW
- TYPE VI ARROW
- RELOCATE SIGN THIS STAGE
- EXISTING SIGN TO REMAIN
- BK — Beg Temp RAILING (TYPE K)
- EK — END Temp RAILING (TYPE K)
- XW — Temp CROSSWALK STRIPING
- # — ROADSIDE SIGN (WITH NUMBER) SEE SIGN PLANS
- # — Temp ROADSIDE SIGN (WITH NUMBER)
- R — PLACE TYPE R (CA) MARKER
- PR — PLACE TYPE P (CA) Rt MARKER
- PL — PLACE TYPE P (CA) Lt MARKER
- TEMPORARY TRAFFIC SIGNAL SYSTEM
- TRM — TEMPORARY RAMP METERING SYSTEM
- LL — LIMIT LINE
- ## — FINAL DRAINAGE SYSTEM (SEE DRAINAGE PLANS)
- No. — Temp PAVEMENT DELINEATION DETAIL
- Temp RAILING (TYPE K)
- Exist Temp RAILING (TYPE K)

THIS PLAN ACCURATE FOR TRAFFIC HANDLING WORK ONLY.

TRAFFIC HANDLING PLAN
PROJECT NOTES

TH-1

REVISED BY	SCV			
DATE REVISED	01/5/18			
CALCULATED-DESIGNED BY	CARLOS RODRIGUEZ			
CHECKED BY	SHAWN VOGTMAN			
CONSULTANT FUNCTIONAL SUPERVISOR	TIMOTHY J. LEE			

STATE OF CALIFORNIA - DEPARTMENT OF TRANSPORTATION — Caltrans

LAST REVISION 01-15-18 — DATE PLOTTED => 6/20/2018 — TIME PLOTTED => 11:13:57 AM

X:\237_101_Mathilda\000_CAD\Sheets\MD-Traffic_Handling\MD-Plans\0413000204md001.dgn

Dist	COUNTY	ROUTE	POST MILES TOTAL PROJECT	SHEET No.	TOTAL SHEETS
04	SCL	101,237	45.2/45.8, 2.7/3.3	186	736

REGISTERED CIVIL ENGINEER — DATE 6-13-18

PLANS APPROVAL DATE 6-20-18

REGISTERED PROFESSIONAL ENGINEER — STEVE LOUPE — No. 63575 — Exp. 9/30/18 — CIVIL — STATE OF CALIFORNIA

THE STATE OF CALIFORNIA OR ITS OFFICERS OR AGENTS SHALL NOT BE RESPONSIBLE FOR THE ACCURACY OR COMPLETENESS OF SCANNED COPIES OF THIS PLAN SHEET.

WMH CORPORATION 50 W San Fernando St Suite 950 San Jose, CA 95113	VTA 3331 N First St Building B San Jose, Ca 95134

SECTION "A-A" - STAGE 1 PHASE 1
MATHILDA AVENUE

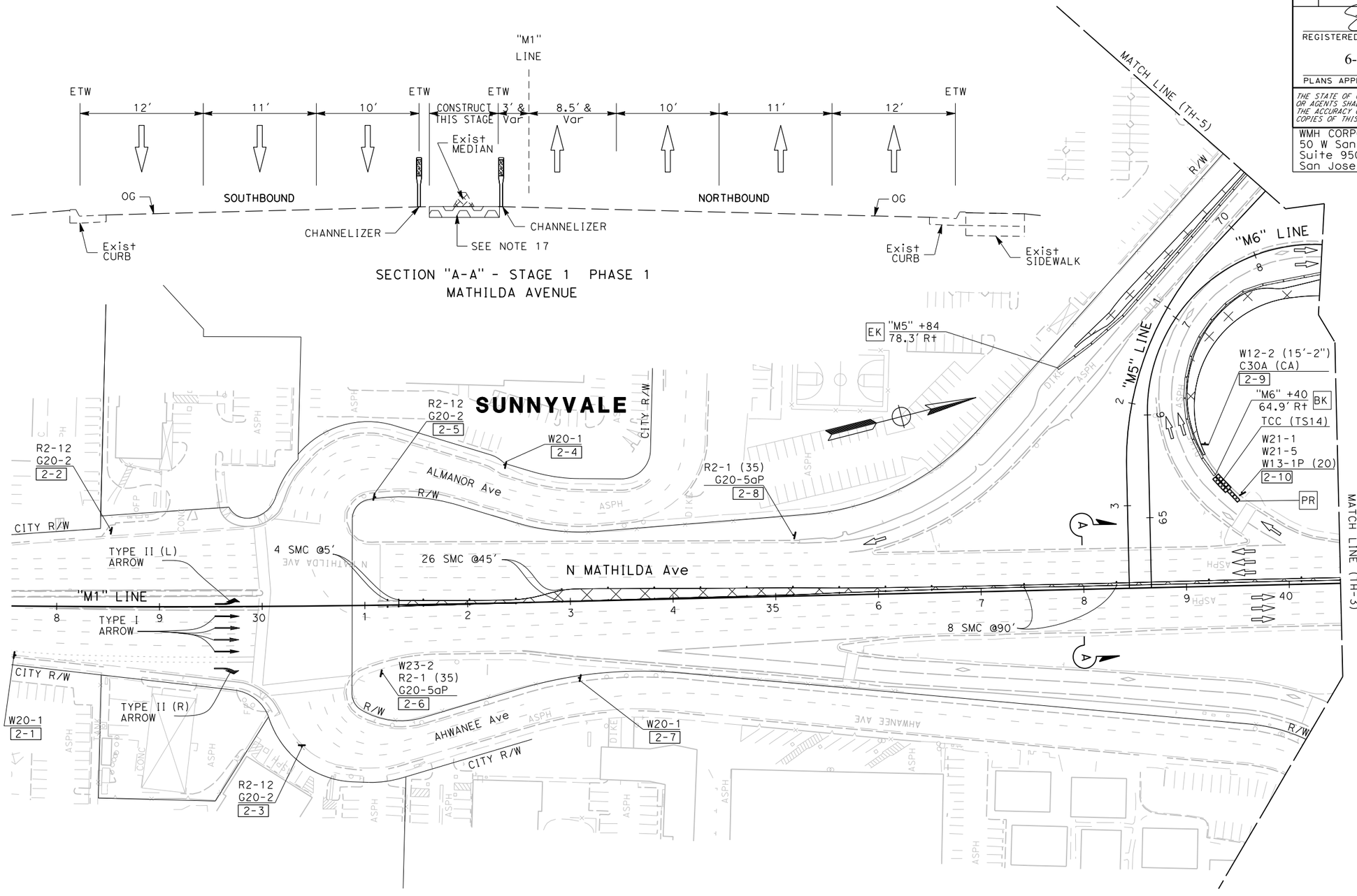

FOR NOTES AND LEGEND, SEE SHEET TH-1

THIS PLAN ACCURATE FOR TRAFFIC HANDLING WORK ONLY.

TRAFFIC HANDLING PLAN

STAGE 1 - PHASE 1
SCALE: 1" = 50′

TH-2

REVISED BY	DATE REVISED
SCV	01/5/18

CALCULATED-DESIGNED BY: CARLOS RODRIGUEZ
CHECKED BY: SHAWN VOGTMAN
SUPERVISOR: TIMOTHY J. LEE
CONSULTANT FUNCTIONAL SUPERVISOR

STATE OF CALIFORNIA - DEPARTMENT OF TRANSPORTATION

Caltrans

LAST REVISION: DATE PLOTTED => 6/20/2018 TIME PLOTTED => 11:14:02 AM 01-15-18

X:\237_101_Mathilda\000_CAD\Sheets\MD-Traffic_Handling\MD-Plans\0413000204md002.dgn

BORDER LAST REVISED 7/2/2010 | USERNAME => Eilif DGN FILE => 0413000204md002.dgn | RELATIVE BORDER SCALE IS IN INCHES 0 1 2 3 | UNIT 0000 | PROJECT NUMBER & PHASE 0413000204

Dist	COUNTY	ROUTE	POST MILES TOTAL PROJECT	SHEET No.	TOTAL SHEETS
04	SCL	101,237	45.2/45.8, 2.7/3.3	187	736

REGISTERED CIVIL ENGINEER 6-13-18 DATE

6-20-18
PLANS APPROVAL DATE

REGISTERED PROFESSIONAL ENGINEER STEVE LOUPE No. 63575 Exp. 9/30/18 CIVIL STATE OF CALIFORNIA

THE STATE OF CALIFORNIA OR ITS OFFICERS OR AGENTS SHALL NOT BE RESPONSIBLE FOR THE ACCURACY OR COMPLETENESS OF SCANNED COPIES OF THIS PLAN SHEET.

WMH CORPORATION
50 W San Fernando St
Suite 950
San Jose, CA 95113

VTA
3331 N First St
Building B
San Jose, Ca 95134

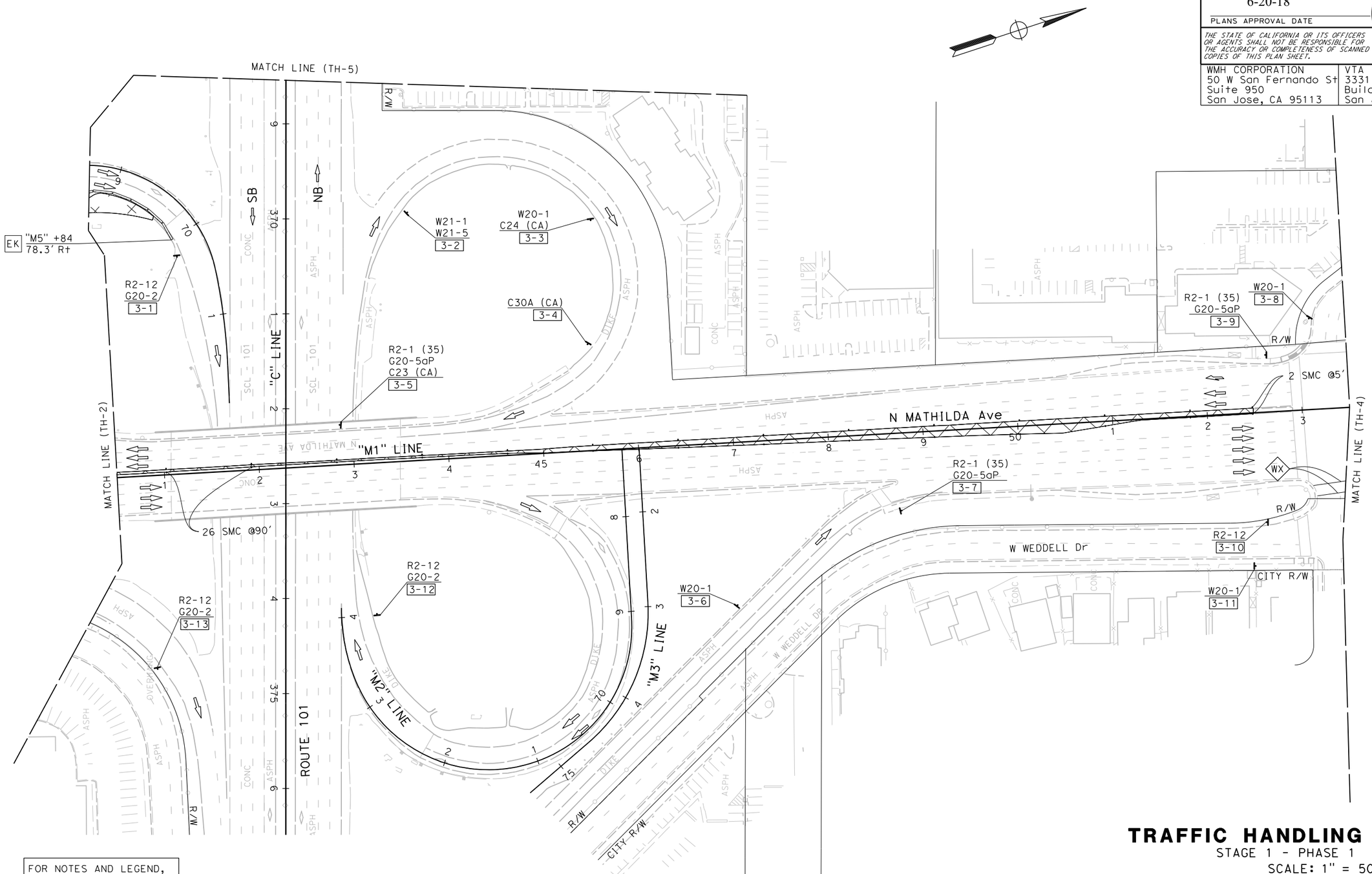

FOR NOTES AND LEGEND, SEE SHEET TH-1

THIS PLAN ACCURATE FOR TRAFFIC HANDLING WORK ONLY.

TRAFFIC HANDLING PLAN

STAGE 1 - PHASE 1

SCALE: 1" = 50'

TH-3

STATE OF CALIFORNIA - DEPARTMENT OF TRANSPORTATION

Caltrans

CONSULTANT FUNCTIONAL SUPERVISOR: TIMOTHY J. LEE

CALCULATED-DESIGNED BY: CARLOS RODRIGUEZ

CHECKED BY: SHAWN VOGTMAN

REVISED BY: SCV

DATE REVISED: 01/5/18

X:\237_101_Mathilda\000_CAD\Sheets\MD-Traffic_Handling\MD-Plans\0413000204md003.dgn

LAST REVISION 01-15-18

DATE PLOTTED => 6/20/2018
TIME PLOTTED => 11:14:04 AM

BORDER LAST REVISED 7/2/2010

USERNAME => Eilif
DGN FILE => 0413000204md003.dgn

RELATIVE BORDER SCALE IS IN INCHES 0 1 2 3

UNIT 0000

PROJECT NUMBER & PHASE 0413000204

Dist	COUNTY	ROUTE	POST MILES TOTAL PROJECT	SHEET No.	TOTAL SHEETS
04	SCL	101,237	45.2/45.8, 2.7/3.3	188	736

6-13-18
REGISTERED CIVIL ENGINEER — DATE

6-20-18
PLANS APPROVAL DATE

REGISTERED PROFESSIONAL ENGINEER — STEVE LOUPE — No. 63575 — Exp. 9/30/18 — CIVIL — STATE OF CALIFORNIA

THE STATE OF CALIFORNIA OR ITS OFFICERS OR AGENTS SHALL NOT BE RESPONSIBLE FOR THE ACCURACY OR COMPLETENESS OF SCANNED COPIES OF THIS PLAN SHEET.

WMH CORPORATION 50 W San Fernando St Suite 950 San Jose, CA 95113	VTA 3331 N First St Building B San Jose, Ca 95134

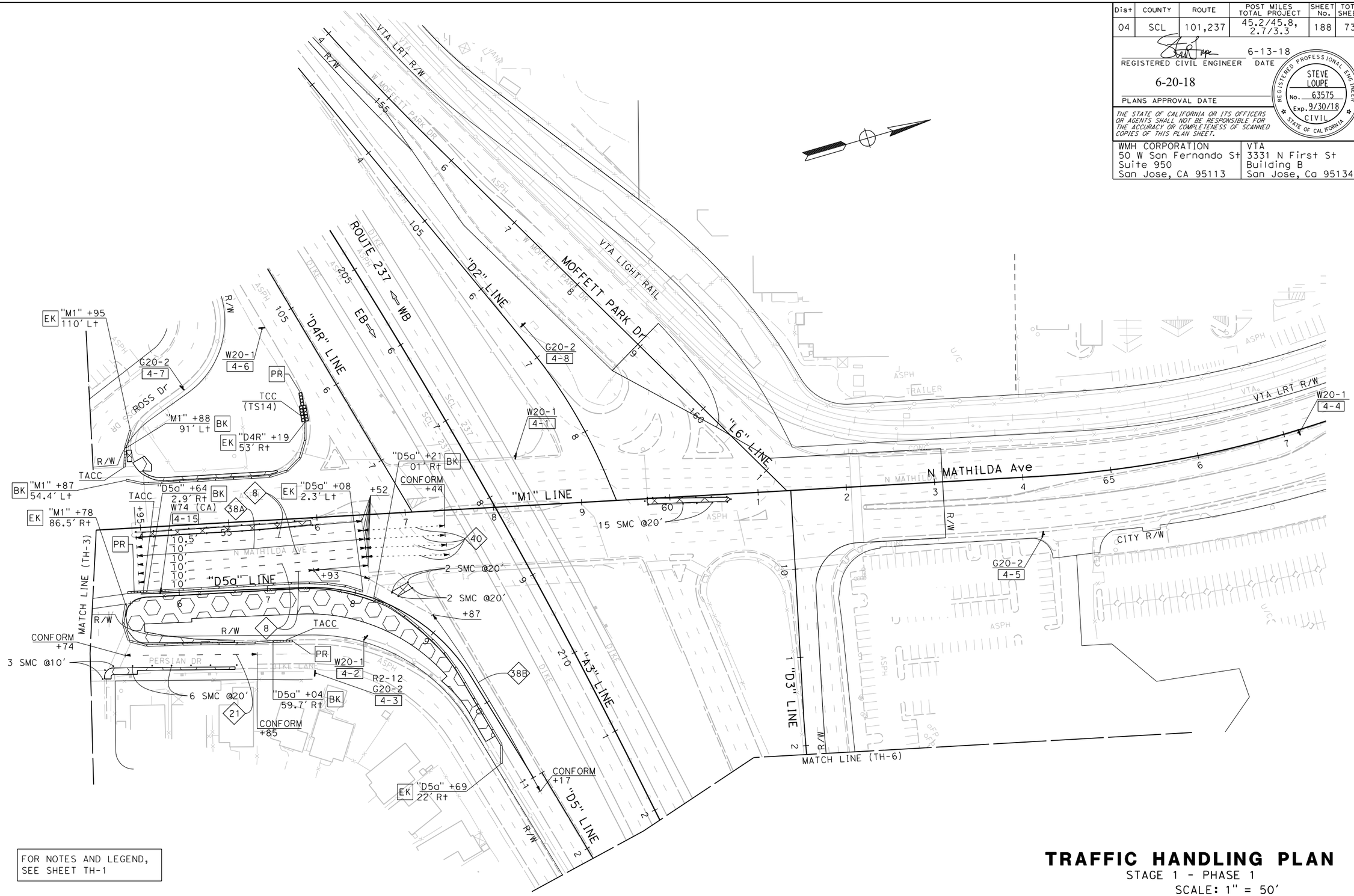

FOR NOTES AND LEGEND, SEE SHEET TH-1

THIS PLAN ACCURATE FOR TRAFFIC HANDLING WORK ONLY.

TRAFFIC HANDLING PLAN

STAGE 1 - PHASE 1

SCALE: 1" = 50'

TH-4

CALCULATED-DESIGNED BY	CARLOS RODRIGUEZ	
CHECKED BY	SHAWN VOGTMAN	
CONSULTANT FUNCTIONAL SUPERVISOR	TIMOTHY J. LEE	
REVISED BY	SCV	
DATE REVISED	01/5/18	

STATE OF CALIFORNIA - DEPARTMENT OF TRANSPORTATION

Caltrans

LAST REVISION: DATE PLOTTED => 6/20/2018; TIME PLOTTED => 11:14:07 AM

X:\237_101_Mathilda\000_CAD\Sheets\MD-Traffic_Handling\MD-Plans\0413000204md004.dgn

BORDER LAST REVISED 7/2/2010 | USERNAME => Eilif; DGN FILE => 0413000204md004.dgn | RELATIVE BORDER SCALE IS IN INCHES 0 1 2 3 | UNIT 0000 | PROJECT NUMBER & PHASE 0413000204

Dist	COUNTY	ROUTE	POST MILES TOTAL PROJECT	SHEET No.	TOTAL SHEETS
04	SCL	101,237	45.2/45.8, 2.7/3.3	189	736

6-13-18
REGISTERED CIVIL ENGINEER DATE

6-20-18
PLANS APPROVAL DATE

REGISTERED PROFESSIONAL ENGINEER
STEVE LOUPE
No. 63575
Exp. 9/30/18
CIVIL
STATE OF CALIFORNIA

THE STATE OF CALIFORNIA OR ITS OFFICERS OR AGENTS SHALL NOT BE RESPONSIBLE FOR THE ACCURACY OR COMPLETENESS OF SCANNED COPIES OF THIS PLAN SHEET.

WMH CORPORATION 50 W San Fernando St Suite 950 San Jose, CA 95113	VTA 3331 N First St Building B San Jose, Ca 95134

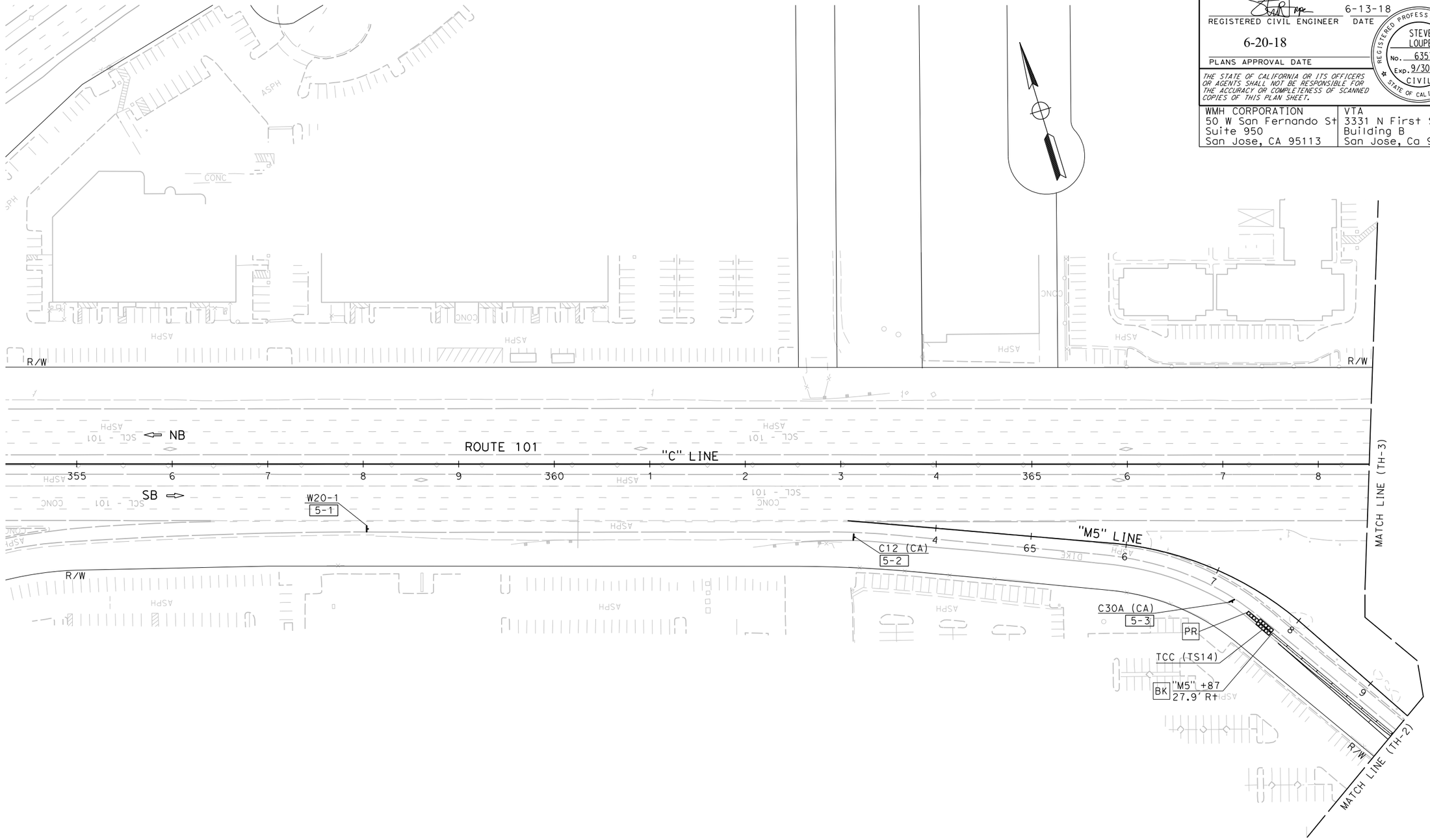

TRAFFIC HANDLING PLAN

STAGE 1 - PHASE 1

SCALE: 1" = 50'

TH-5

FOR NOTES AND LEGEND, SEE SHEET TH-1

THIS PLAN ACCURATE FOR TRAFFIC HANDLING WORK ONLY.

CALCULATED-DESIGNED BY	CARLOS RODRIGUEZ	REVISED BY	SCV
CHECKED BY	SHAWN VOGTMAN	DATE REVISED	01/5/18
SUPERVISOR	TIMOTHY J. LEE	CONSULTANT FUNCTIONAL SUPERVISOR	

STATE OF CALIFORNIA - DEPARTMENT OF TRANSPORTATION

Caltrans

LAST REVISION 01-15-18
DATE PLOTTED => 6/20/2018
TIME PLOTTED => 11:14:09 AM

X:\237_101_Mathilda\000_CAD\Sheets\MD-Traffic_Handling\MD-Plans\0413000204md005.dgn

BORDER LAST REVISED 7/2/2010 | USERNAME => Eilif | DGN FILE => 0413000204md005.dgn | RELATIVE BORDER SCALE IS IN INCHES 0 1 2 3 | UNIT 0000 | PROJECT NUMBER & PHASE 0413000204

Dist	COUNTY	ROUTE	POST MILES TOTAL PROJECT	SHEET No.	TOTAL SHEETS
04	SCL	101,237	45.2/45.8, 2.7/3.3	190	736

6-13-18
REGISTERED CIVIL ENGINEER — DATE

6-20-18
PLANS APPROVAL DATE

REGISTERED PROFESSIONAL ENGINEER — STEVE LOUPE — No. 63575 — Exp. 9/30/18 — CIVIL — STATE OF CALIFORNIA

THE STATE OF CALIFORNIA OR ITS OFFICERS OR AGENTS SHALL NOT BE RESPONSIBLE FOR THE ACCURACY OR COMPLETENESS OF SCANNED COPIES OF THIS PLAN SHEET.

WMH CORPORATION
50 W San Fernando St
Suite 950
San Jose, CA 95113

VTA
3331 N First St
Building B
San Jose, Ca 95134

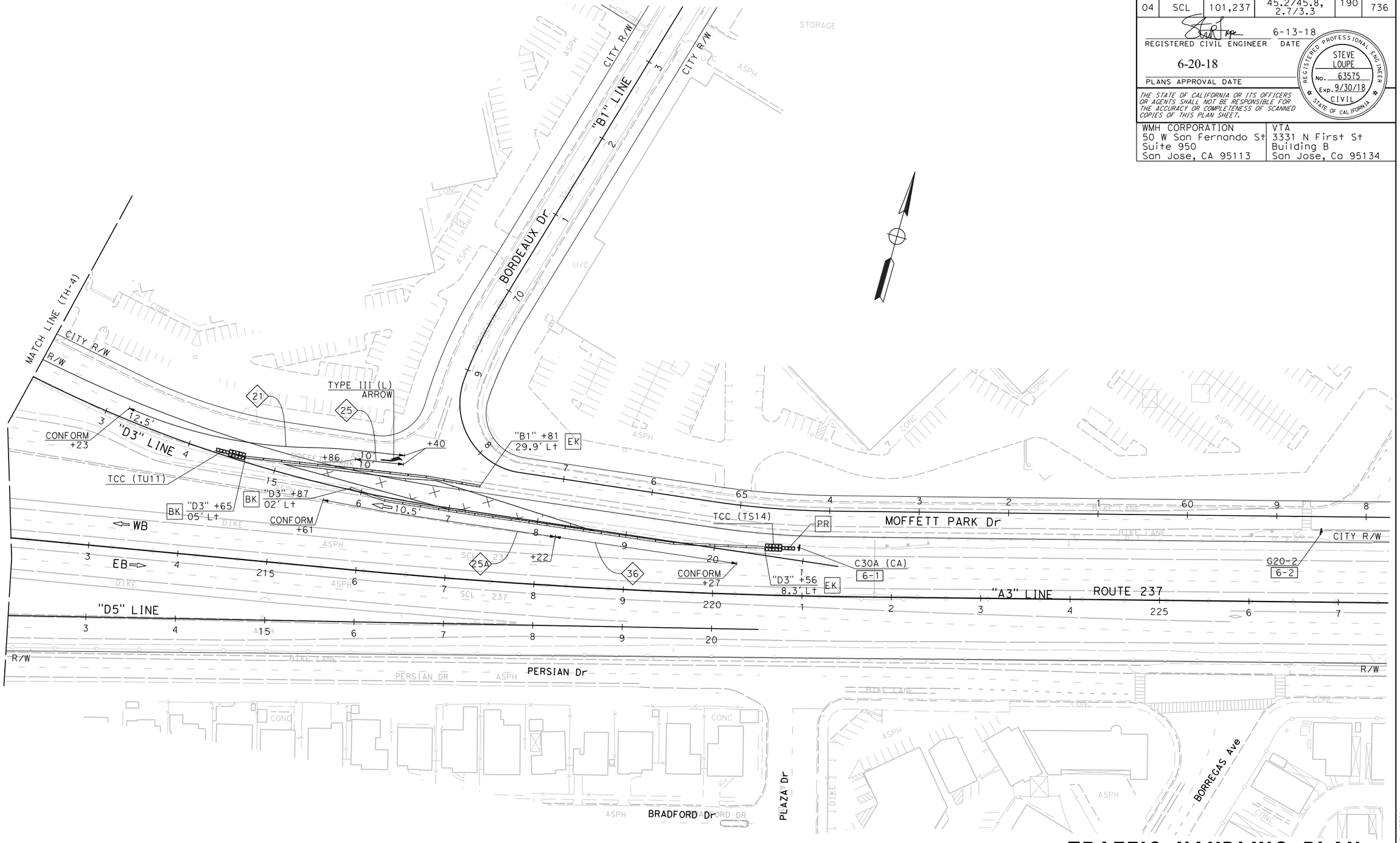

FOR NOTES AND LEGEND, SEE SHEET TH-1

THIS PLAN ACCURATE FOR TRAFFIC HANDLING WORK ONLY.

TRAFFIC HANDLING PLAN

STAGE 1 - PHASE 1

SCALE: 1" = 50'

TH-6

CALCULATED-DESIGNED BY	CHECKED BY	REVISED BY	DATE REVISED
CARLOS RODRIGUEZ	SHAWN VOGTMAN	SCV	01/5/18

CONSULTANT FUNCTIONAL SUPERVISOR: TIMOTHY J. LEE

STATE OF CALIFORNIA - DEPARTMENT OF TRANSPORTATION

Caltrans

X:\237_101_Mathilde\000_CAD\Sheets\MD-Traffic_Handling\MD-Plans\0413000204md006.dgn

LAST REVISION: DATE PLOTTED => 6/20/2018 TIME PLOTTED => 11:14:11 AM
01-15-18

BORDER LAST REVISED 7/2/2010	USERNAME => Eilif DGN FILE => 0413000204md006.dgn	RELATIVE BORDER SCALE IS IN INCHES 0 1 2 3	UNIT 0000	PROJECT NUMBER & PHASE 0413000204

Dist	COUNTY	ROUTE	POST MILES TOTAL PROJECT	SHEET No.	TOTAL SHEETS
04	SCL	101,237	45.2/45.8, 2.7/3.3	191	736

6-13-18
REGISTERED CIVIL ENGINEER DATE

6-20-18
PLANS APPROVAL DATE

REGISTERED PROFESSIONAL ENGINEER
STEVE LOUPE
No. 63575
Exp. 9/30/18
CIVIL
STATE OF CALIFORNIA

THE STATE OF CALIFORNIA OR ITS OFFICERS OR AGENTS SHALL NOT BE RESPONSIBLE FOR THE ACCURACY OR COMPLETENESS OF SCANNED COPIES OF THIS PLAN SHEET.

WMH CORPORATION
50 W San Fernando St
Suite 950
San Jose, CA 95113

VTA
3331 N First St
Building B
San Jose, Ca 95134

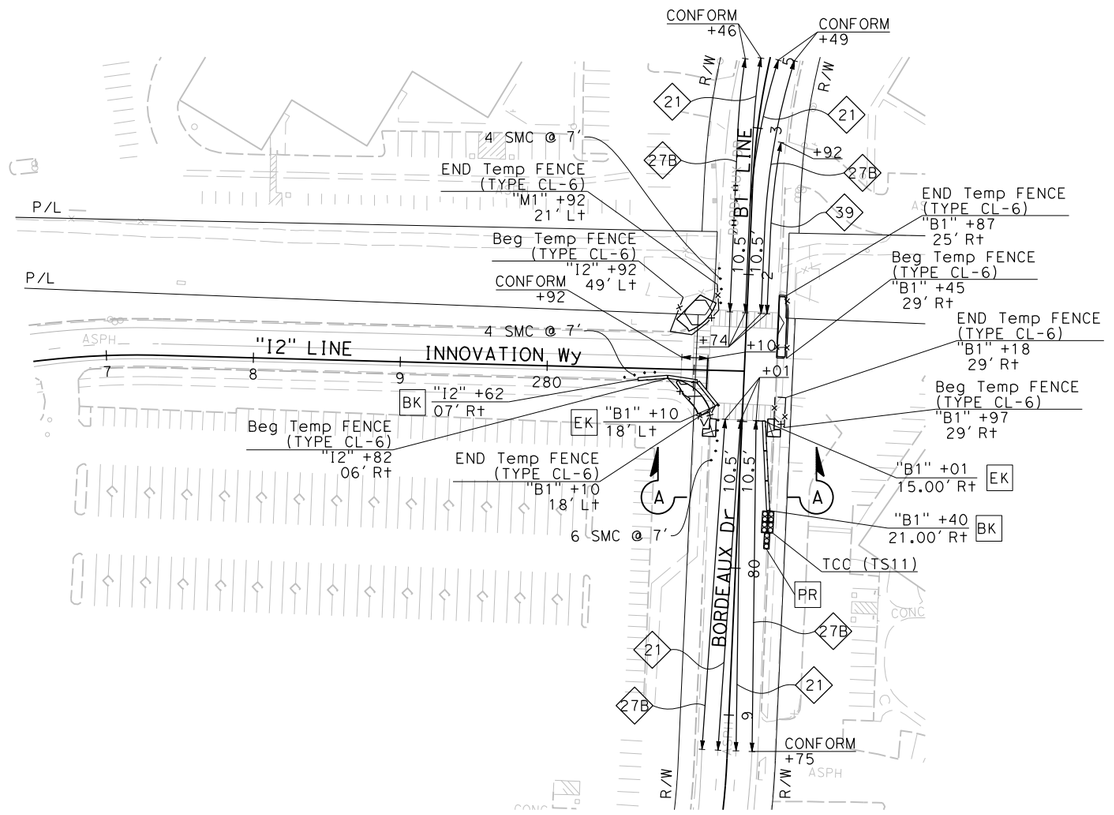

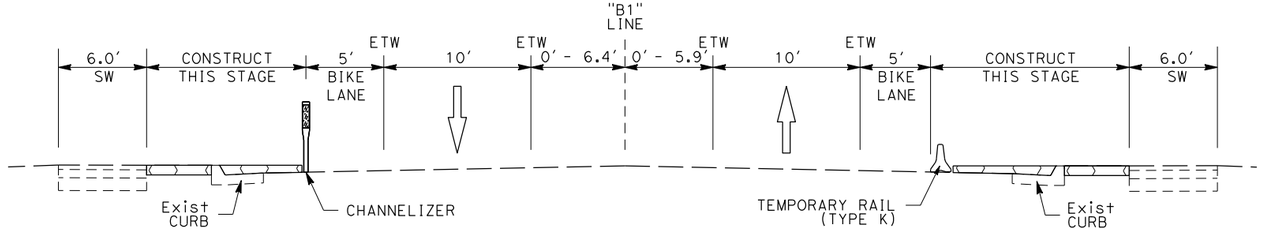

SECTION "A-A" - STAGE 1 - PHASE 1
BORDEAUX Dr

FOR NOTES AND LEGEND, SEE SHEET TH-1

THIS PLAN ACCURATE FOR TRAFFIC HANDLING WORK ONLY.

TRAFFIC HANDLING PLAN

STAGE 1 - PHASE 1
SCALE: 1" = 50'

TH-7

LAST REVISION: 01-15-18
DATE PLOTTED => 6/20/2018
TIME PLOTTED => 11:14:13 AM

	REVISED BY	DATE REVISED
	SCV	01/5/18

CALCULATED-DESIGNED BY: CARLOS RODRIGUEZ
CHECKED BY: SHAWN VOGTMAN
CONSULTANT FUNCTIONAL SUPERVISOR: TIMOTHY J. LEE

STATE OF CALIFORNIA - DEPARTMENT OF TRANSPORTATION
Caltrans

X:\237_101_Mathilde\000_CAD\Sheets\MD-Traffic_Handling\MD-Plans\0413000204md007.dgn

BORDER LAST REVISED 7/2/2010 | USERNAME => Eilif | DGN FILE => 0413000204md007.dgn | RELATIVE BORDER SCALE IS IN INCHES 0 1 2 3 | UNIT 0000 | PROJECT NUMBER & PHASE 0413000204

Dist	COUNTY	ROUTE	POST MILES TOTAL PROJECT	SHEET No.	TOTAL SHEETS
04	SCL	101,237	45.2/45.8, 2.7/3.3	192	736

REGISTERED CIVIL ENGINEER — DATE: 6-13-18

PLANS APPROVAL DATE: 6-20-18

REGISTERED PROFESSIONAL ENGINEER — STEVE LOUPE — No. 63575 — Exp. 9/30/18 — CIVIL — STATE OF CALIFORNIA

THE STATE OF CALIFORNIA OR ITS OFFICERS OR AGENTS SHALL NOT BE RESPONSIBLE FOR THE ACCURACY OR COMPLETENESS OF SCANNED COPIES OF THIS PLAN SHEET.

WMH CORPORATION
50 W San Fernando St
Suite 950
San Jose, CA 95113

VTA
3331 N First St
Building B
San Jose, Ca 95134

CALCULATED-DESIGNED BY	CARLOS RODRIGUEZ	REVISED BY	SCV
CHECKED BY	SHAWN VOGTMAN	DATE REVISED	01/5/18

STATE OF CALIFORNIA - DEPARTMENT OF TRANSPORTATION
CONSULTANT FUNCTIONAL SUPERVISOR: TIMOTHY J. LEE

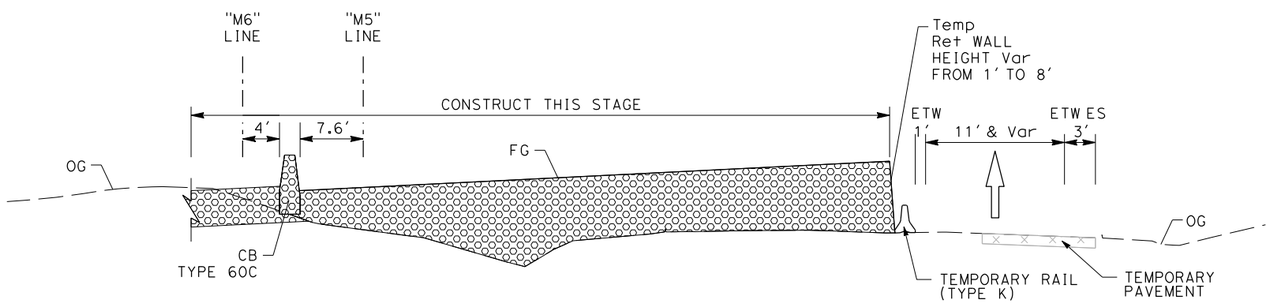

SECTION "B-B" - STAGE 1 - PHASE 2
MATHILDA AVENUE

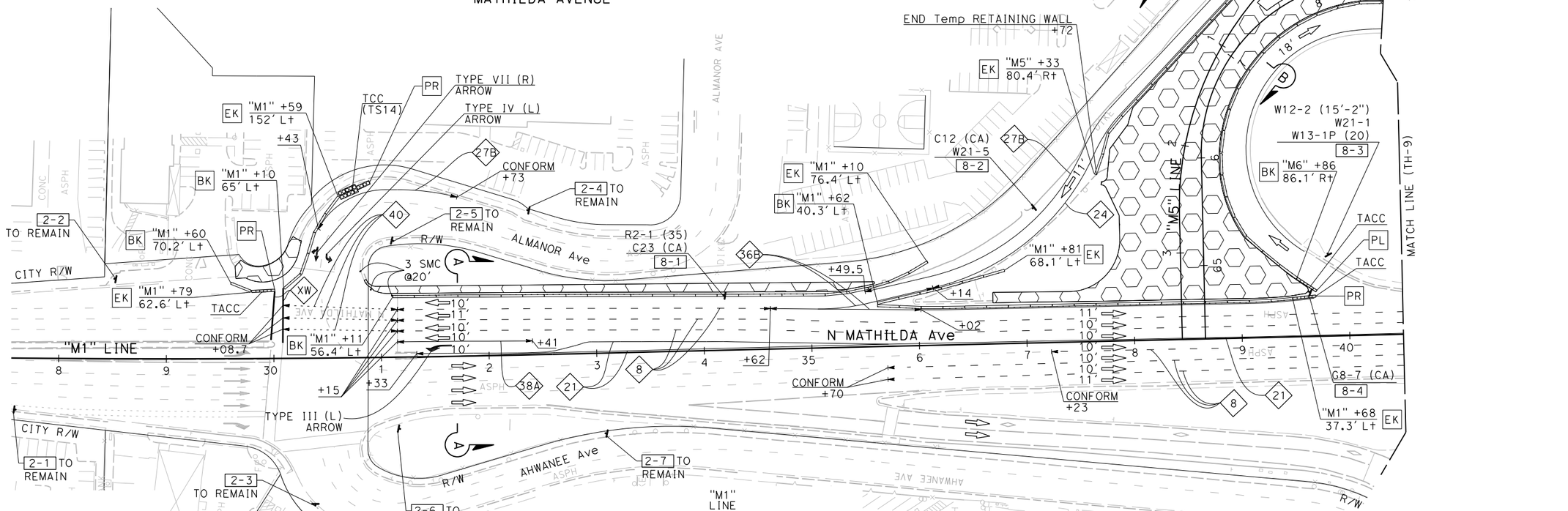

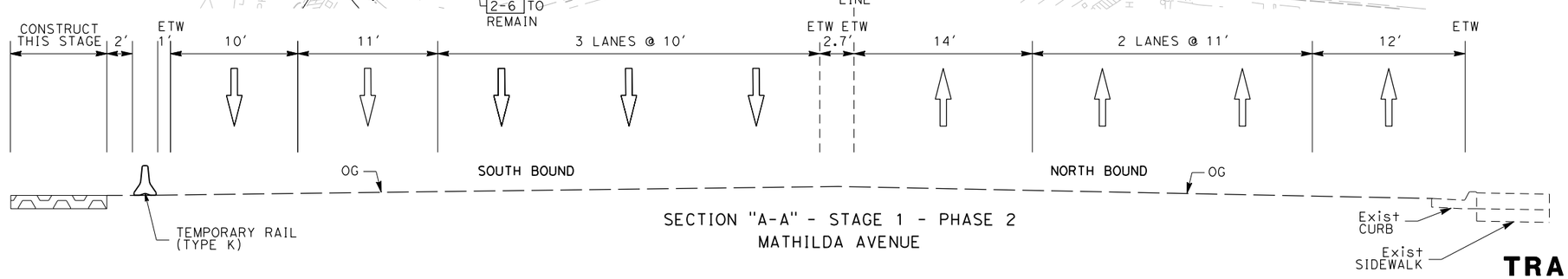

SECTION "A-A" - STAGE 1 - PHASE 2
MATHILDA AVENUE

FOR NOTES AND LEGEND, SEE SHEET TH-1

THIS PLAN ACCURATE FOR TRAFFIC HANDLING WORK ONLY.

TRAFFIC HANDLING PLAN

STAGE 1 - PHASE 2
SCALE: 1" = 50'

TH-8

LAST REVISION: DATE PLOTTED => 6/20/2018
01-15-18 TIME PLOTTED => 11:14:18 AM

X:\237_101_Mathilda\000_CAD\Sheets\MD-Traffic_Handling\MD-Plans\0413000204md008.dgn

BORDER LAST REVISED 7/2/2010	USERNAME => Eilif DGN FILE => 0413000204md008.dgn	RELATIVE BORDER SCALE IS IN INCHES 0 1 2 3	UNIT 0000	PROJECT NUMBER & PHASE 0413000204

Dist	COUNTY	ROUTE	POST MILES TOTAL PROJECT	SHEET No.	TOTAL SHEETS
04	SCL	101,237	45.2/45.8, 2.7/3.3	193	736

REGISTERED CIVIL ENGINEER — 6-13-18 DATE

PLANS APPROVAL DATE — 6-20-18

REGISTERED PROFESSIONAL ENGINEER — STEVE LOUPE — No. 63575 — Exp. 9/30/18 — CIVIL — STATE OF CALIFORNIA

THE STATE OF CALIFORNIA OR ITS OFFICERS OR AGENTS SHALL NOT BE RESPONSIBLE FOR THE ACCURACY OR COMPLETENESS OF SCANNED COPIES OF THIS PLAN SHEET.

WMH CORPORATION
50 W San Fernando St
Suite 950
San Jose, CA 95113

VTA
3331 N First St
Building B
San Jose, Ca 95134

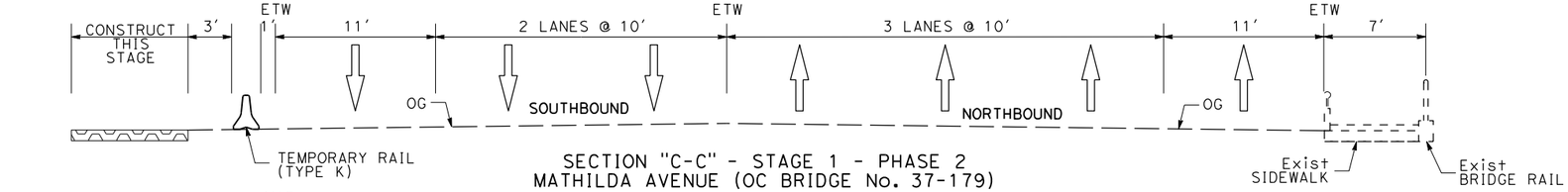

SECTION "C-C" - STAGE 1 - PHASE 2
MATHILDA AVENUE (OC BRIDGE No. 37-179)

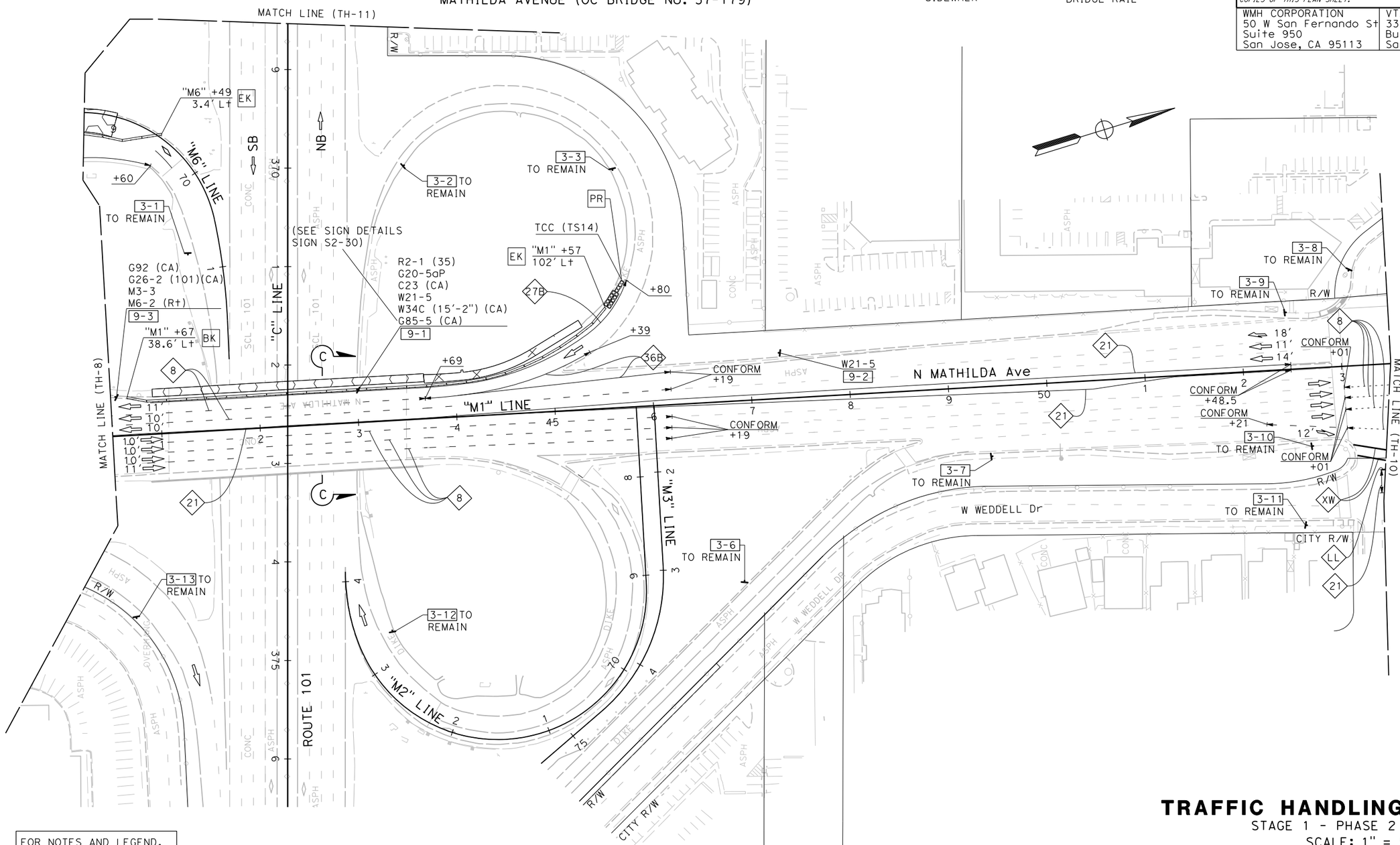

FOR NOTES AND LEGEND, SEE SHEET TH-1

THIS PLAN ACCURATE FOR TRAFFIC HANDLING WORK ONLY.

TRAFFIC HANDLING PLAN

STAGE 1 - PHASE 2
SCALE: 1" = 50′

TH-9

LAST REVISION — DATE PLOTTED => 6/20/2018 — TIME PLOTTED => 11:14:21 AM — 01-15-18

CALCULATED- DESIGNED BY: CARLOS RODRIGUEZ — REVISED BY: SCV
CHECKED BY: SHAWN VOGTMAN — DATE REVISED: 01/5/18
CONSULTANT FUNCTIONAL SUPERVISOR: TIMOTHY J. LEE
STATE OF CALIFORNIA - DEPARTMENT OF TRANSPORTATION — Caltrans

X:\237_101_Mathilda\000_CAD\Sheets\MD-Traffic_Handling\MD-Plans\0413000204md009.dgn

BORDER LAST REVISED 7/2/2010 | USERNAME => Eilif | DGN FILE => 0413000204md009.dgn | RELATIVE BORDER SCALE IS IN INCHES 0 1 2 3 | UNIT 0000 | PROJECT NUMBER & PHASE 0413000204

Dist	COUNTY	ROUTE	POST MILES TOTAL PROJECT	SHEET No.	TOTAL SHEETS
04	SCL	101,237	45.2/45.8, 2.7/3.3	194	736

REGISTERED CIVIL ENGINEER — 6-13-18 DATE

STEVE LOUPE No. 63575 Exp. 9/30/20 CIVIL — REGISTERED PROFESSIONAL ENGINEER — STATE OF CALIFORNIA

6-20-18
PLANS APPROVAL DATE

THE STATE OF CALIFORNIA OR ITS OFFICERS OR AGENTS SHALL NOT BE RESPONSIBLE FOR THE ACCURACY OR COMPLETENESS OF SCANNED COPIES OF THIS PLAN SHEET.

WMH CORPORATION 50 W San Fernando St Suite 950 San Jose, CA 95113	VTA 3331 N First St Building B San Jose, Ca 95134

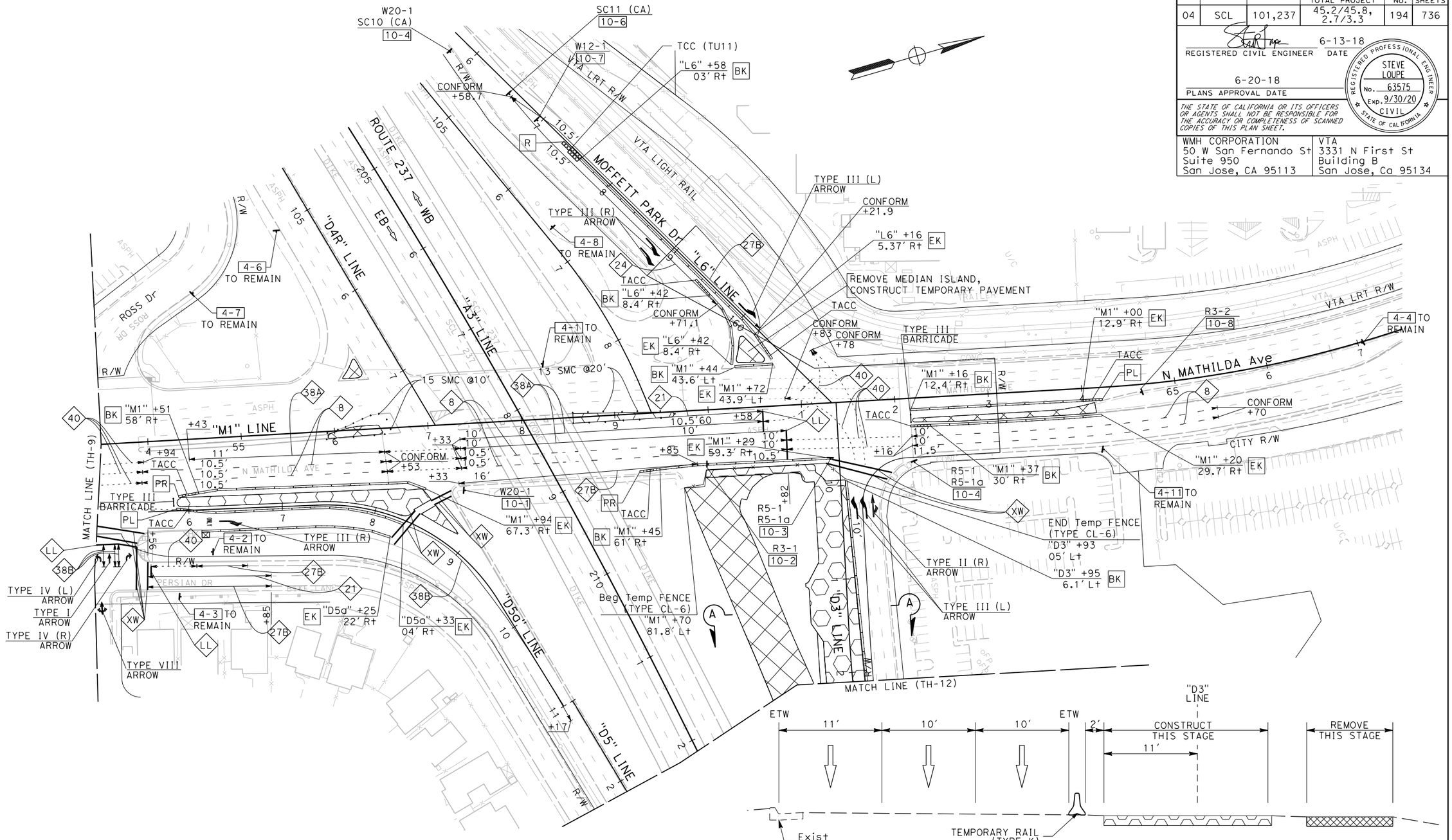

SECTION "A-A" - STAGE 1 - PHASE 2
237 WB OFF-RAMP

FOR NOTES AND LEGEND,
SEE SHEET TH-1

THIS PLAN ACCURATE FOR TRAFFIC HANDLING WORK ONLY.

TRAFFIC HANDLING PLAN

STAGE 1 - PHASE 2
SCALE: 1" = 50'

TH-10

CALCULATED-DESIGNED BY	CARLOS RODRIGUEZ	REVISED BY	SCV
CHECKED BY	SHAWN VOGTMAN	DATE REVISED	01/5/18
SUPERVISOR	TIMOTHY J. LEE		
CONSULTANT FUNCTIONAL			

STATE OF CALIFORNIA - DEPARTMENT OF TRANSPORTATION

x:\237_101_Mathilda\000_CAD\Sheets\000_Submittals\Conformed Plans\0413000204md010.dgn

LAST REVISION 01-15-18 | DATE PLOTTED => 12/13/2018 | TIME PLOTTED => 4:38:04 PM

BORDER LAST REVISED 7/2/2010 | USERNAME => eilif | DGN FILE => 0413000204md010.dgn | RELATIVE BORDER SCALE IS IN INCHES 0 1 2 3 | UNIT 0000 | PROJECT NUMBER & PHASE 0413000204

Dist	COUNTY	ROUTE	POST MILES TOTAL PROJECT	SHEET No.	TOTAL SHEETS
04	SCL	101,237	45.2/45.8, 2.7/3.3	195	736

REGISTERED CIVIL ENGINEER 6-13-18 DATE

6-20-18

PLANS APPROVAL DATE

REGISTERED PROFESSIONAL ENGINEER STEVE LOUPE No. 63575 Exp. 9/30/18 CIVIL STATE OF CALIFORNIA

THE STATE OF CALIFORNIA OR ITS OFFICERS OR AGENTS SHALL NOT BE RESPONSIBLE FOR THE ACCURACY OR COMPLETENESS OF SCANNED COPIES OF THIS PLAN SHEET.

WMH CORPORATION
50 W San Fernando St
Suite 950
San Jose, CA 95113

VTA
3331 N First St
Building B
San Jose, Ca 95134

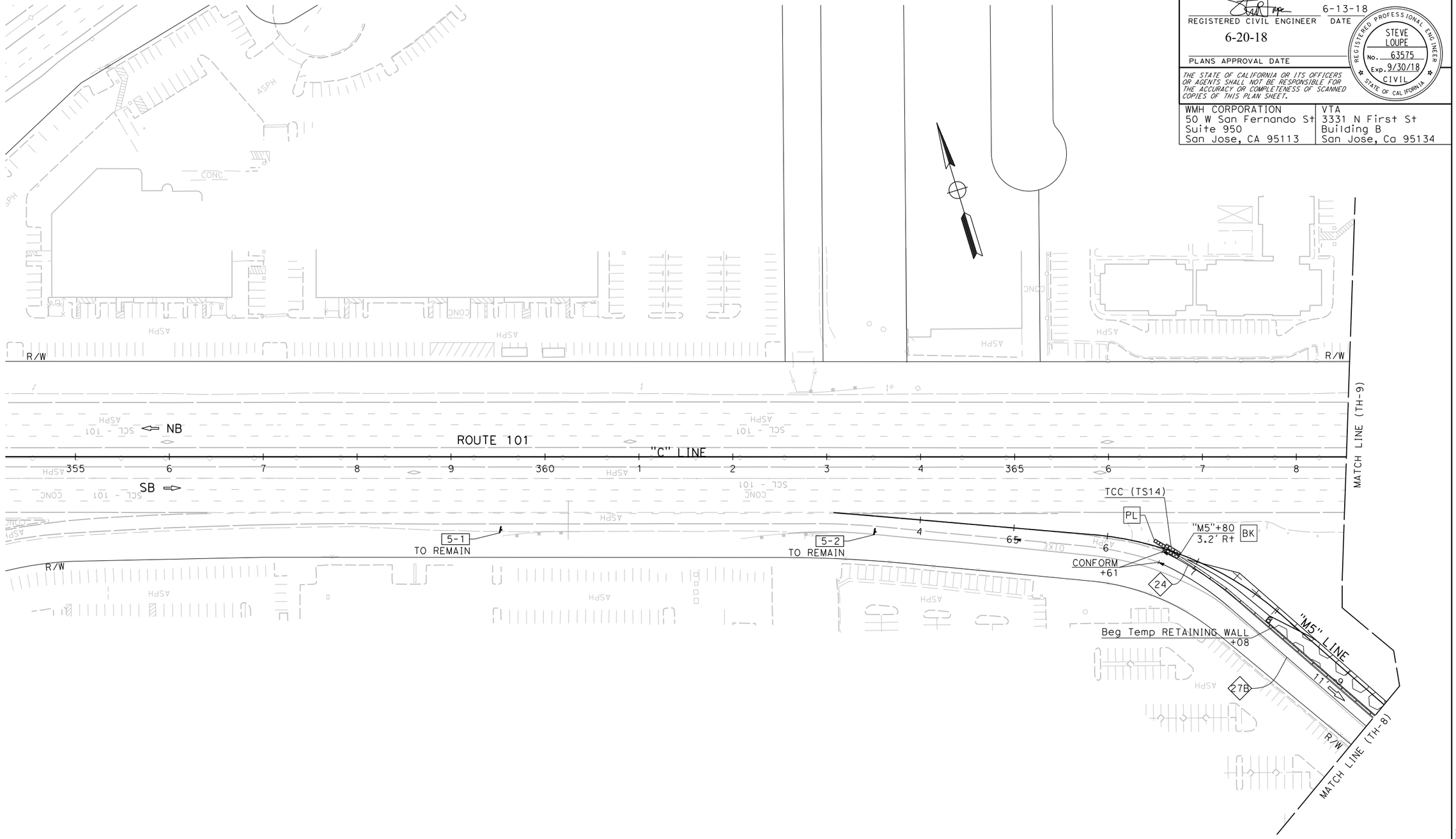

TRAFFIC HANDLING PLAN

STAGE 1 - PHASE 2

SCALE: 1" = 50'

TH-11

FOR NOTES AND LEGEND, SEE SHEET TH-1

THIS PLAN ACCURATE FOR TRAFFIC HANDLING WORK ONLY.

STATE OF CALIFORNIA - DEPARTMENT OF TRANSPORTATION

Caltrans

CONSULTANT FUNCTIONAL SUPERVISOR: TIMOTHY J. LEE

CALCULATED-DESIGNED BY: CARLOS RODRIGUEZ

CHECKED BY: SHAWN VOGTMAN

REVISED BY: SCV

DATE REVISED: 01/5/18

X:\237_101_Mathilda\000_CAD\Sheets\MD-Traffic_Handling\MD-Plans\0413000204md011.dgn

LAST REVISION 01-15-18

DATE PLOTTED => 6/20/2018
TIME PLOTTED => 11:14:26 AM

BORDER LAST REVISED 7/2/2010

USERNAME => Eilif
DGN FILE => 0413000204md011.dgn

RELATIVE BORDER SCALE IS IN INCHES 0 1 2 3

UNIT 0000

PROJECT NUMBER & PHASE 0413000204

Dist	COUNTY	ROUTE	POST MILES TOTAL PROJECT	SHEET No.	TOTAL SHEETS
04	SCL	101,237	45.2/45.8, 2.7/3.3	196	736

REGISTERED CIVIL ENGINEER — 6-13-18 DATE

6-20-18
PLANS APPROVAL DATE

STEVE LOUPE No. 63575 Exp. 9/30/18 CIVIL — REGISTERED PROFESSIONAL ENGINEER — STATE OF CALIFORNIA

THE STATE OF CALIFORNIA OR ITS OFFICERS OR AGENTS SHALL NOT BE RESPONSIBLE FOR THE ACCURACY OR COMPLETENESS OF SCANNED COPIES OF THIS PLAN SHEET.

WMH CORPORATION
50 W San Fernando St
Suite 950
San Jose, CA 95113

VTA
3331 N First St
Building B
San Jose, Ca 95134

CALCULATED-DESIGNED BY	CARLOS RODRIGUEZ	REVISED BY	SCV
CHECKED BY	SHAWN VOGTMAN	DATE REVISED	01/5/18

CONSULTANT FUNCTIONAL SUPERVISOR: TIMOTHY J. LEE

STATE OF CALIFORNIA - DEPARTMENT OF TRANSPORTATION

X:\237_101_Mathilda\000_CAD\Sheets\MD-Traffic_Handling\MD-Plans\0413000204md012.dgn

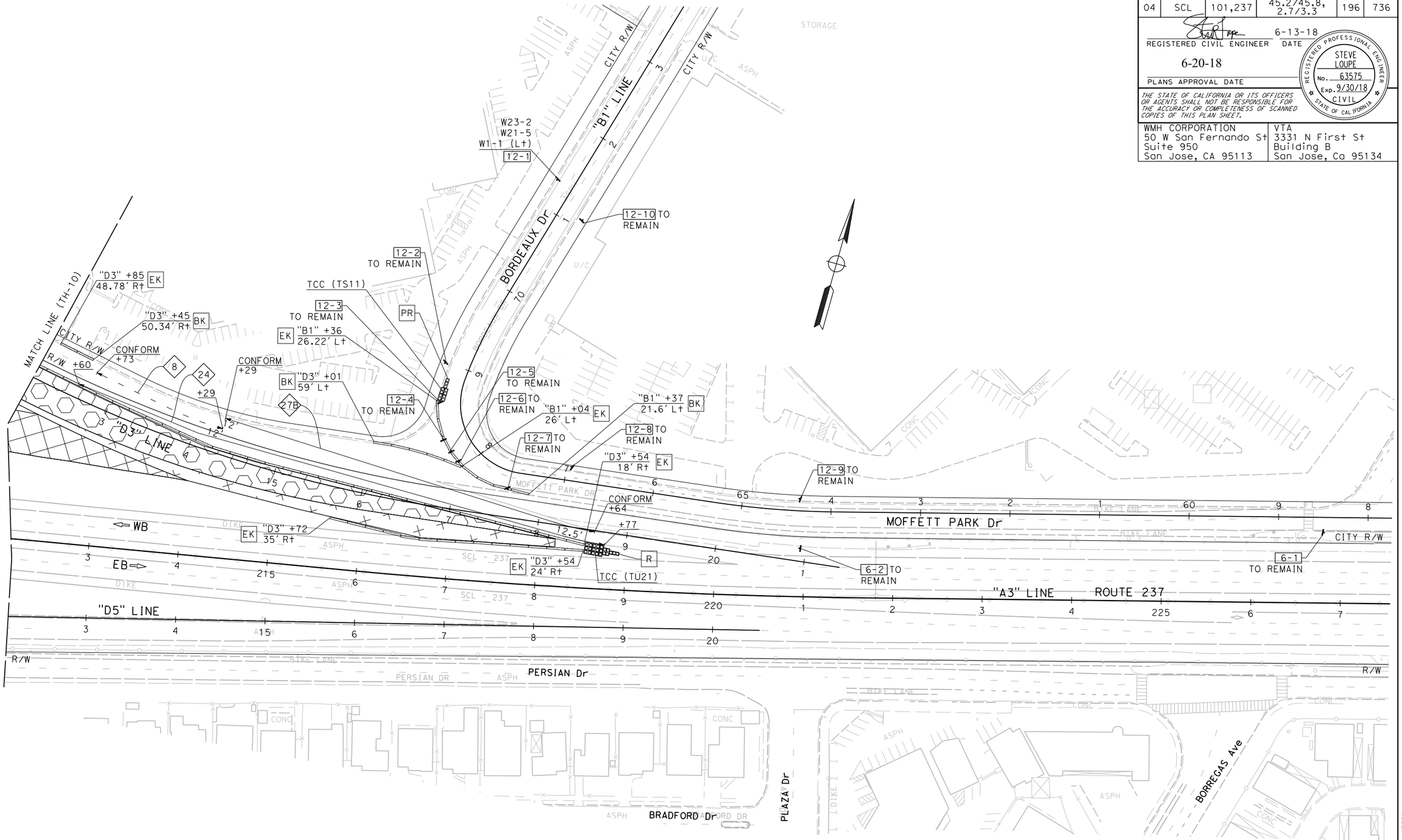

FOR NOTES AND LEGEND, SEE SHEET TH-1

THIS PLAN ACCURATE FOR TRAFFIC HANDLING WORK ONLY.

TRAFFIC HANDLING PLAN

STAGE 1 - PHASE 2

SCALE: 1" = 50'

TH-12

LAST REVISION — DATE PLOTTED => 6/20/2018; TIME PLOTTED => 11:14:29 AM; 01-15-18

BORDER LAST REVISED 7/2/2010 | USERNAME => Eilif; DGN FILE => 0413000204md012.dgn | RELATIVE BORDER SCALE IS IN INCHES 0 1 2 3 | UNIT 0000 | PROJECT NUMBER & PHASE 0413000204

Dist	COUNTY	ROUTE	POST MILES TOTAL PROJECT	SHEET No.	TOTAL SHEETS
04	SCL	101,237	45.2/45.8, 2.7/3.3	197	736

REGISTERED CIVIL ENGINEER — DATE: 6-13-18

PLANS APPROVAL DATE: 6-20-18

REGISTERED PROFESSIONAL ENGINEER — STEVE LOUPE — No. 63575 — Exp. 9/30/18 — CIVIL — STATE OF CALIFORNIA

THE STATE OF CALIFORNIA OR ITS OFFICERS OR AGENTS SHALL NOT BE RESPONSIBLE FOR THE ACCURACY OR COMPLETENESS OF SCANNED COPIES OF THIS PLAN SHEET.

WMH CORPORATION 50 W San Fernando St Suite 950 San Jose, CA 95113	VTA 3331 N First St Building B San Jose, Ca 95134

SECTION "A-A" - STAGE - 1 PHASE 3
101 SB ON/OFF-RAMP

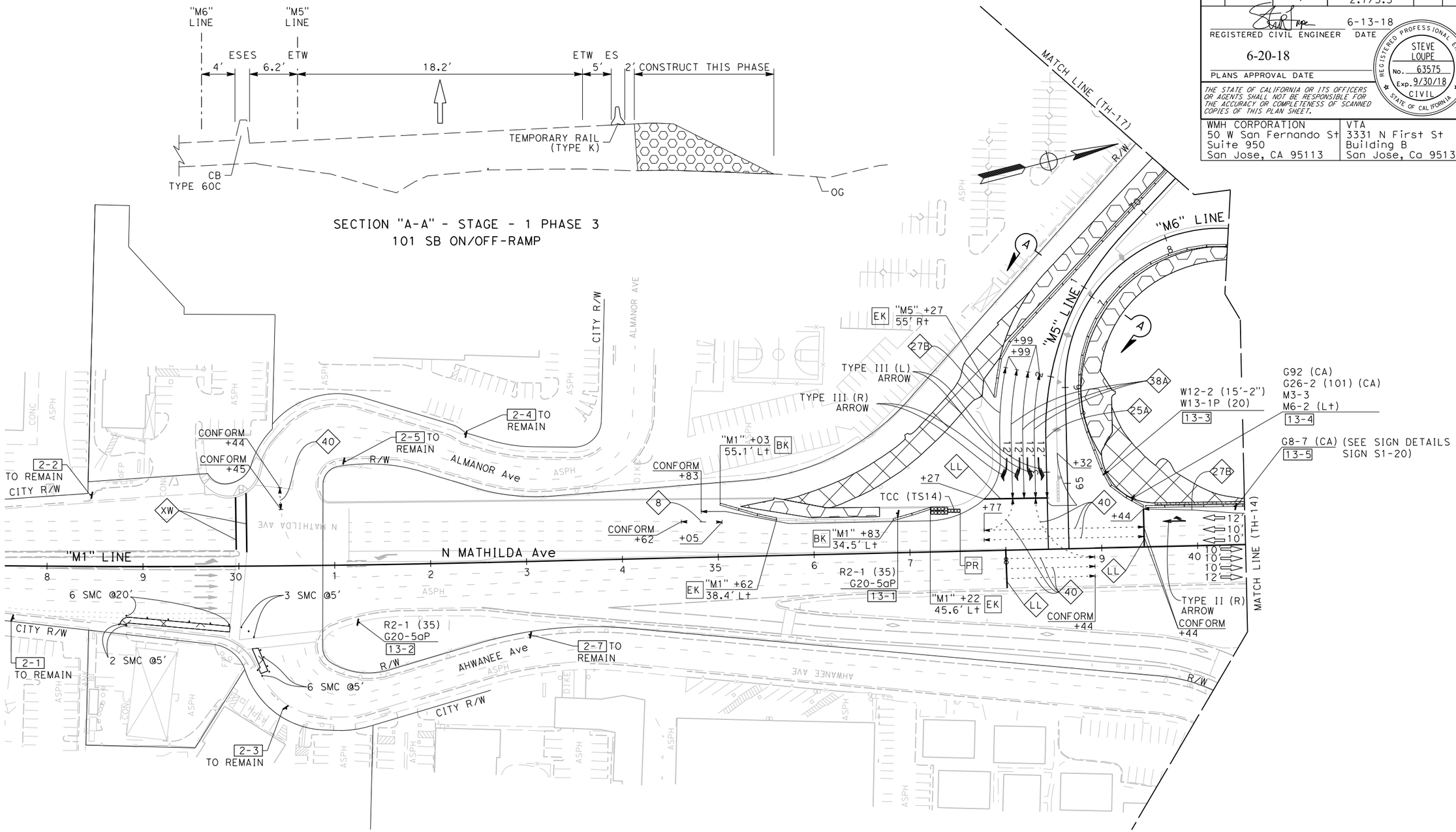

FOR NOTES AND LEGEND, SEE SHEET TH-1

THIS PLAN ACCURATE FOR TRAFFIC HANDLING WORK ONLY.

TRAFFIC HANDLING PLAN

STAGE 1 - PHASE 3

SCALE: 1" = 50'

TH-13

CALCULATED-DESIGNED BY	CARLOS RODRIGUEZ	
CHECKED BY	SHAWN VOGTMAN	
	REVISED BY	SCV
	DATE REVISED	01/5/18

STATE OF CALIFORNIA - DEPARTMENT OF TRANSPORTATION — Caltrans

CONSULTANT FUNCTIONAL SUPERVISOR: TIMOTHY J. LEE

LAST REVISION — DATE PLOTTED => 6/20/2018 — TIME PLOTTED => 11:14:32 AM

X:\237_101_Mathilde\000_CAD\Sheets\MD-Traffic_Handling\MD-Plans\0413000204md013.dgn

BORDER LAST REVISED 7/2/2010 | USERNAME => Eilif | DGN FILE => 0413000204md013.dgn | RELATIVE BORDER SCALE IS IN INCHES 0 1 2 3 | UNIT 0000 | PROJECT NUMBER & PHASE 0413000204

Dist	COUNTY	ROUTE	POST MILES TOTAL PROJECT	SHEET No.	TOTAL SHEETS
04	SCL	101,237	45.2/45.8, 2.7/3.3	198	736

REGISTERED CIVIL ENGINEER — DATE: 6-13-18

PLANS APPROVAL DATE: 6-20-18

STEVE LOUPE No. 63575 Exp. 9/30/18 CIVIL — REGISTERED PROFESSIONAL ENGINEER — STATE OF CALIFORNIA

THE STATE OF CALIFORNIA OR ITS OFFICERS OR AGENTS SHALL NOT BE RESPONSIBLE FOR THE ACCURACY OR COMPLETENESS OF SCANNED COPIES OF THIS PLAN SHEET.

WMH CORPORATION
50 W San Fernando St
Suite 950
San Jose, CA 95113

VTA
3331 N First St
Building B
San Jose, Ca 95134

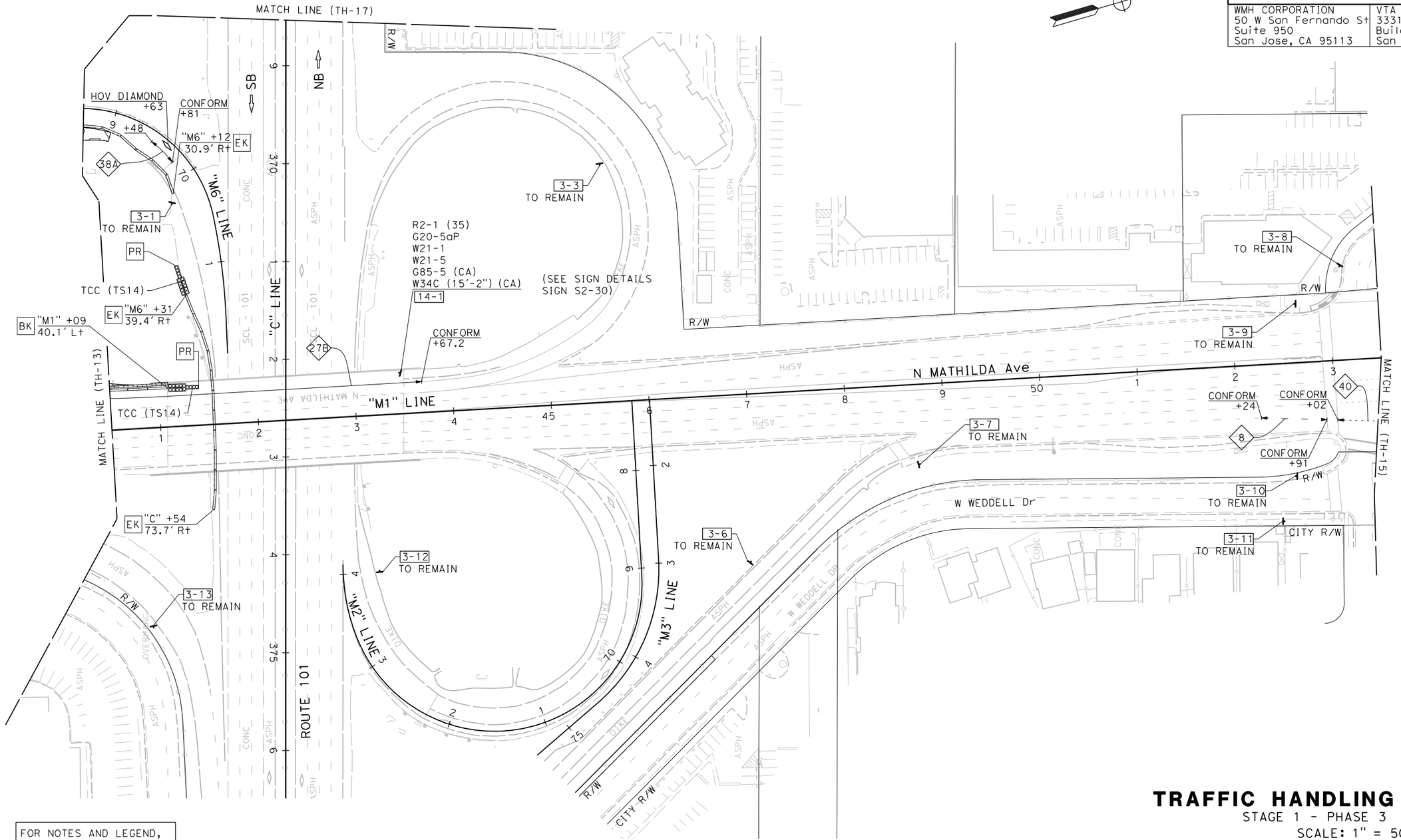

FOR NOTES AND LEGEND, SEE SHEET TH-1

THIS PLAN ACCURATE FOR TRAFFIC HANDLING WORK ONLY.

TRAFFIC HANDLING PLAN

STAGE 1 - PHASE 3

SCALE: 1" = 50'

TH-14

CALCULATED-DESIGNED BY	CARLOS RODRIGUEZ	
CHECKED BY	SHAWN VOGTMAN	
CONSULTANT FUNCTIONAL SUPERVISOR	TIMOTHY J. LEE	
REVISED BY	SCV	
DATE REVISED	01/5/18	

STATE OF CALIFORNIA - DEPARTMENT OF TRANSPORTATION

Caltrans

LAST REVISION: DATE PLOTTED => 6/20/2018; TIME PLOTTED => 11:14:34 AM

X:\237_101_Mathilda\000_CAD\Sheets\MD-Traffic_Handling\MD-Plans\0413000204md014.dgn

BORDER LAST REVISED 7/2/2010 | USERNAME => Eilif; DGN FILE => 0413000204md014.dgn | RELATIVE BORDER SCALE IS IN INCHES 0 1 2 3 | UNIT 0000 | PROJECT NUMBER & PHASE 0413000204

Dist	COUNTY	ROUTE	POST MILES TOTAL PROJECT	SHEET No.	TOTAL SHEETS
04	SCL	101,237	45.2/45.8, 2.7/3.3	199	736

REGISTERED CIVIL ENGINEER — 6-13-18 DATE

6-20-18
PLANS APPROVAL DATE

REGISTERED PROFESSIONAL ENGINEER — STEVE LOUPE — No. 63575 — Exp. 9/30/18 — CIVIL — STATE OF CALIFORNIA

THE STATE OF CALIFORNIA OR ITS OFFICERS OR AGENTS SHALL NOT BE RESPONSIBLE FOR THE ACCURACY OR COMPLETENESS OF SCANNED COPIES OF THIS PLAN SHEET.

WMH CORPORATION 50 W San Fernando St Suite 950 San Jose, CA 95113	VTA 3331 N First St Building B San Jose, Ca 95134

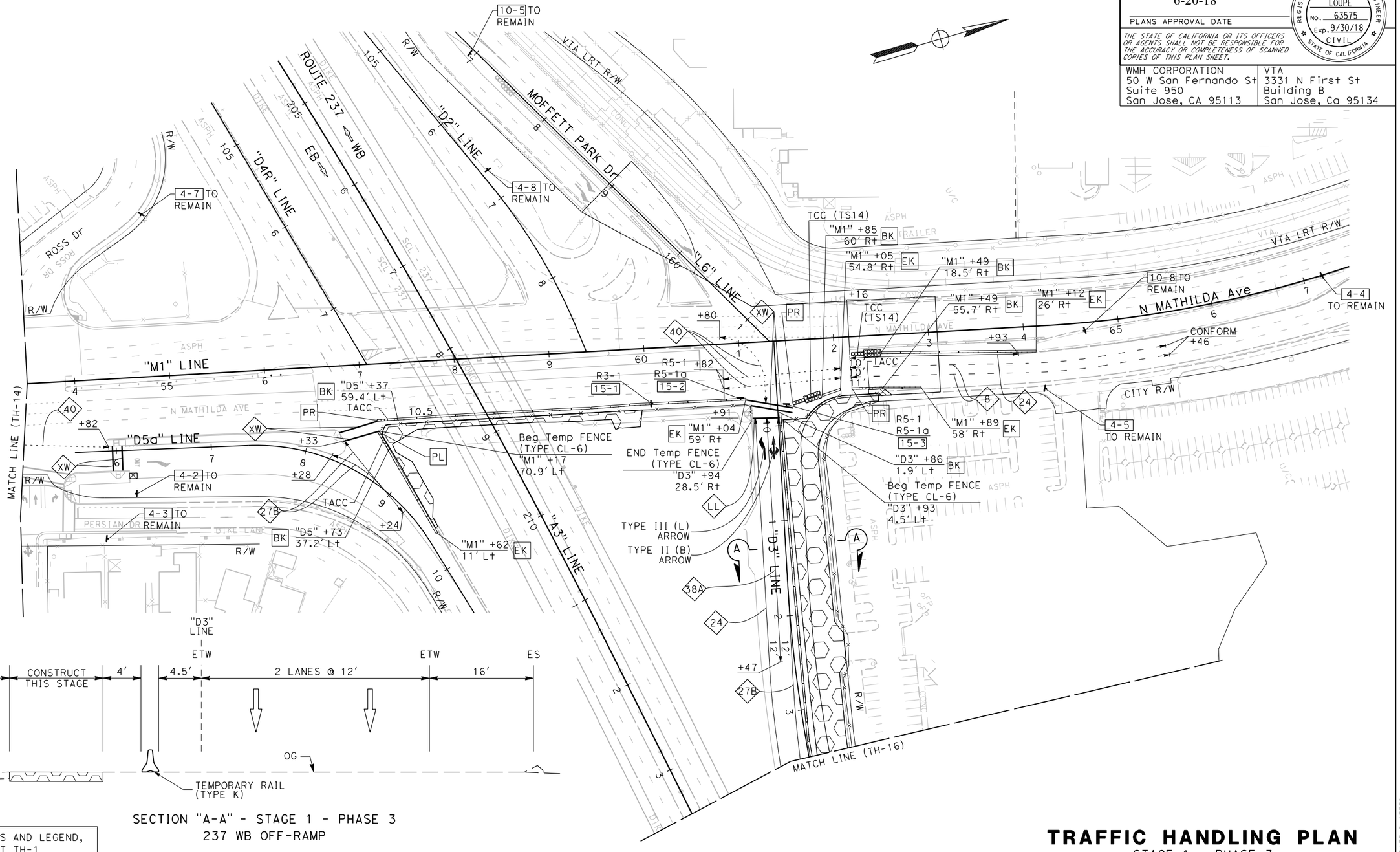

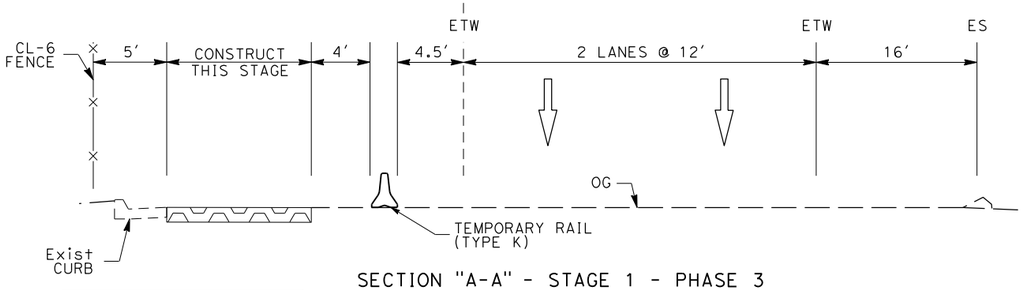

SECTION "A-A" - STAGE 1 - PHASE 3
237 WB OFF-RAMP

FOR NOTES AND LEGEND, SEE SHEET TH-1

THIS PLAN ACCURATE FOR TRAFFIC HANDLING WORK ONLY.

TRAFFIC HANDLING PLAN

STAGE 1 - PHASE 3

SCALE: 1" = 50'

TH-15

REVISED BY	DATE REVISED
SCV	01/5/18

CALCULATED-DESIGNED BY: CARLOS RODRIGUEZ
CHECKED BY: SHAWN VOGTMAN
CONSULTANT FUNCTIONAL SUPERVISOR: TIMOTHY J. LEE
STATE OF CALIFORNIA - DEPARTMENT OF TRANSPORTATION

LAST REVISION — DATE PLOTTED => 6/20/2018, TIME PLOTTED => 11:14:38 AM
01-15-18

X:\237_101_Mathilda\000_CAD\Sheets\MD-Traffic_Handling\MD-Plans\0413000204md015.dgn

BORDER LAST REVISED 7/2/2010 | USERNAME => Eilif | DGN FILE => 0413000204md015.dgn | RELATIVE BORDER SCALE IS IN INCHES 0 1 2 3 | UNIT 0000 | PROJECT NUMBER & PHASE 0413000204

Dist	COUNTY	ROUTE	POST MILES TOTAL PROJECT	SHEET No.	TOTAL SHEETS
04	SCL	101,237	45.2/45.8, 2.7/3.3	200	736

6-13-18
REGISTERED CIVIL ENGINEER — DATE

6-20-18
PLANS APPROVAL DATE

REGISTERED PROFESSIONAL ENGINEER
STEVE LOUPE
No. 63575
Exp. 9/30/18
CIVIL
STATE OF CALIFORNIA

THE STATE OF CALIFORNIA OR ITS OFFICERS OR AGENTS SHALL NOT BE RESPONSIBLE FOR THE ACCURACY OR COMPLETENESS OF SCANNED COPIES OF THIS PLAN SHEET.

WMH CORPORATION
50 W San Fernando St
Suite 950
San Jose, CA 95113

VTA
3331 N First St
Building B
San Jose, Ca 95134

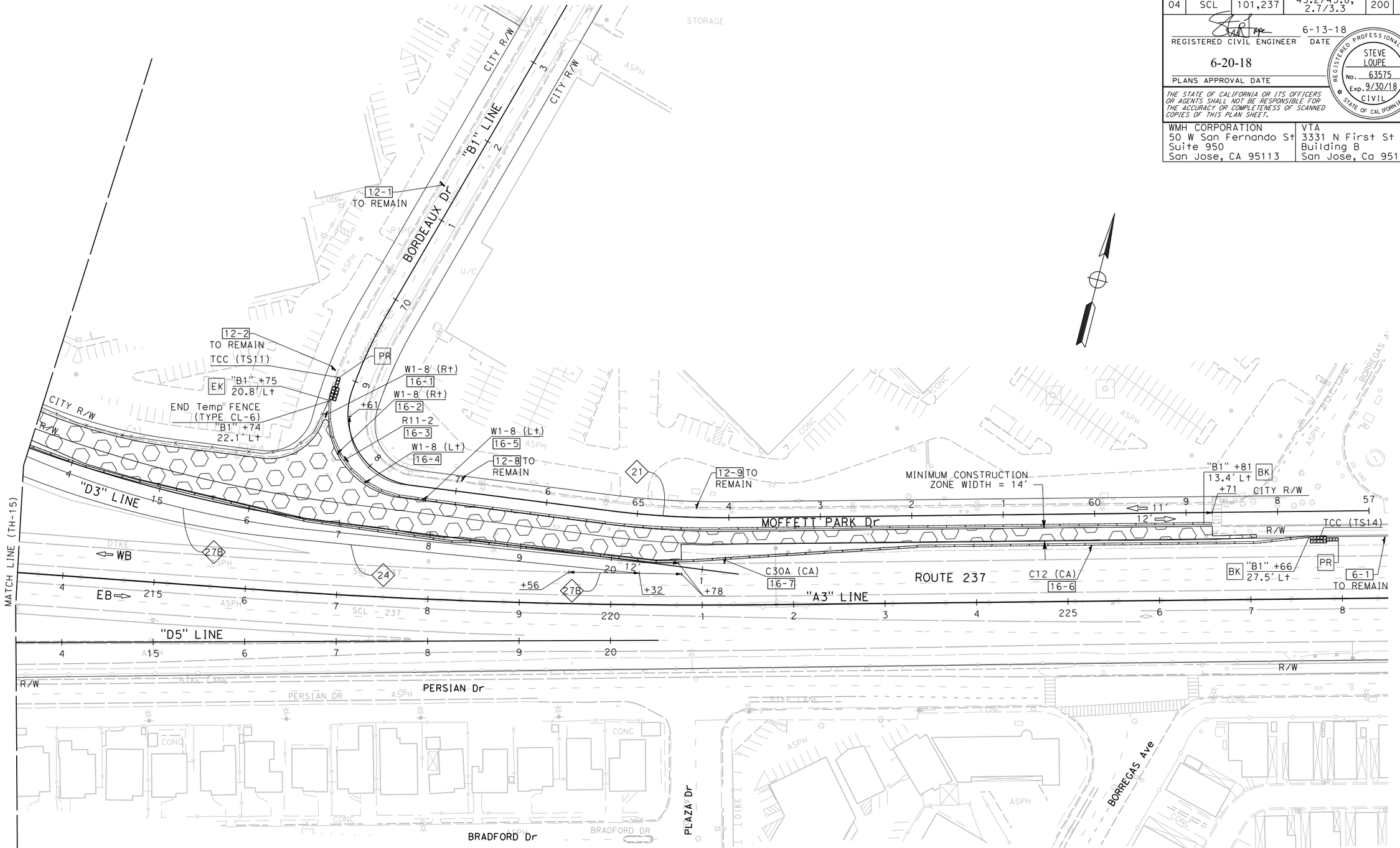

FOR NOTES AND LEGEND, SEE SHEET TH-1

THIS PLAN ACCURATE FOR TRAFFIC HANDLING WORK ONLY.

TRAFFIC HANDLING PLAN

STAGE 1 - PHASE 3
SCALE: 1" = 50'

TH-16

CALCULATED-DESIGNED BY	CARLOS RODRIGUEZ	REVISED BY	SCV
CHECKED BY	SHAWN VOGTMAN	DATE REVISED	01/5/18
CONSULTANT FUNCTIONAL SUPERVISOR	TIMOTHY J. LEE		

STATE OF CALIFORNIA - DEPARTMENT OF TRANSPORTATION
Caltrans

X:\237_101_Mathilda\000_CAD\Sheets\MD-Traffic_Handling\MD-Plans\0413000204md016.dgn

LAST REVISION: DATE PLOTTED => 6/20/2018
01-15-18 TIME PLOTTED => 11:14:41 AM

BORDER LAST REVISED 7/2/2010 | USERNAME => Eilif | DGN FILE => 0413000204md016.dgn | RELATIVE BORDER SCALE IS IN INCHES 0 1 2 3 | UNIT 0000 | PROJECT NUMBER & PHASE 0413000204

Dist	COUNTY	ROUTE	POST MILES TOTAL PROJECT	SHEET No.	TOTAL SHEETS
04	SCL	101,237	45.2/45.8, 2.7/3.3	201	736

REGISTERED CIVIL ENGINEER 6-13-18 DATE

6-20-18
PLANS APPROVAL DATE

REGISTERED PROFESSIONAL ENGINEER STEVE LOUPE No. 63575 Exp. 9/30/18 CIVIL STATE OF CALIFORNIA

THE STATE OF CALIFORNIA OR ITS OFFICERS OR AGENTS SHALL NOT BE RESPONSIBLE FOR THE ACCURACY OR COMPLETENESS OF SCANNED COPIES OF THIS PLAN SHEET.

WMH CORPORATION
50 W San Fernando St
Suite 950
San Jose, CA 95113

VTA
3331 N First St
Building B
San Jose, Ca 95134

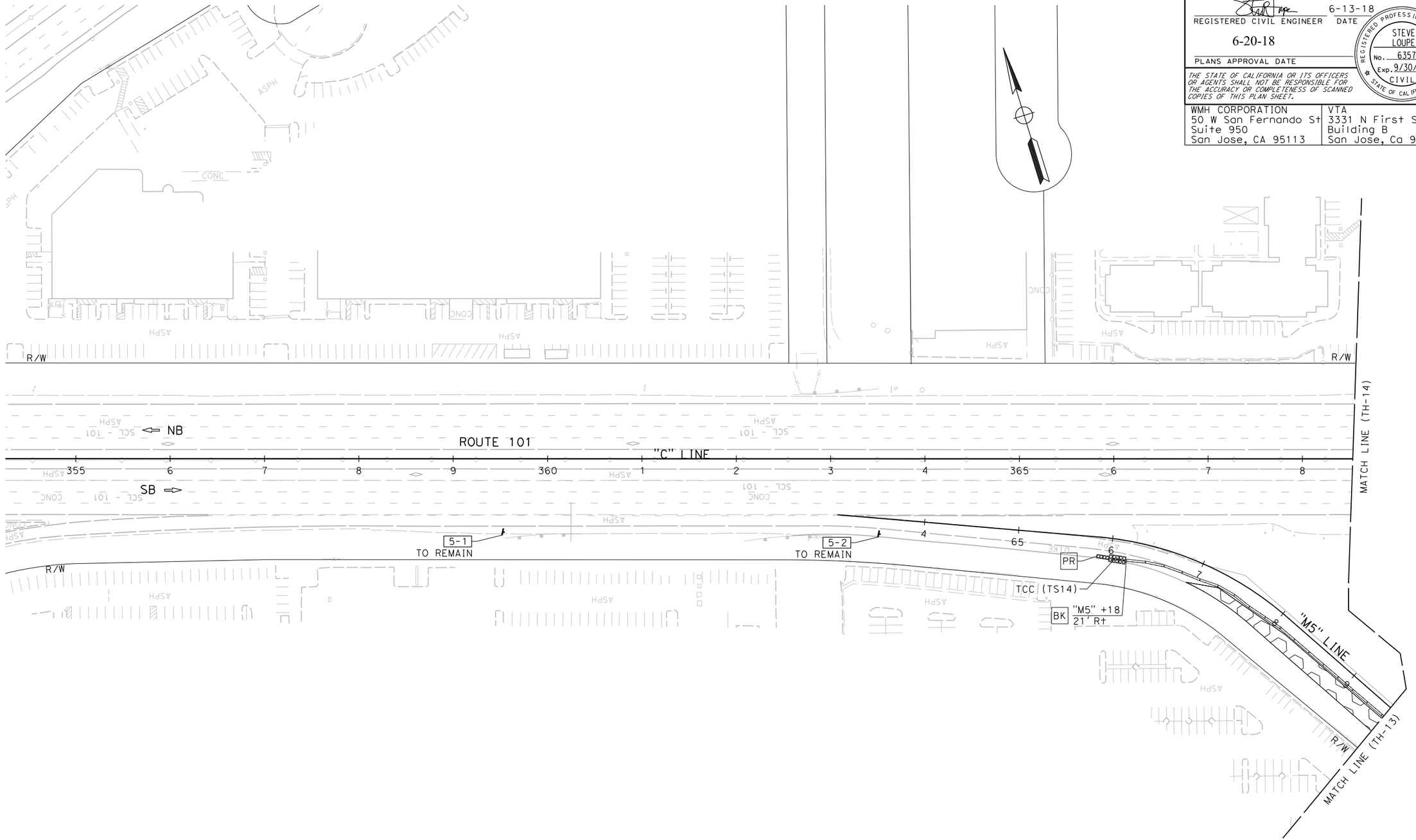

TRAFFIC HANDLING PLAN

STAGE 1 - PHASE 3

SCALE: 1" = 50'

TH-17

FOR NOTES AND LEGEND, SEE SHEET TH-1

THIS PLAN ACCURATE FOR TRAFFIC HANDLING WORK ONLY.

STATE OF CALIFORNIA - DEPARTMENT OF TRANSPORTATION

Caltrans

CONSULTANT FUNCTIONAL SUPERVISOR: TIMOTHY J. LEE

CALCULATED-DESIGNED BY: CARLOS RODRIGUEZ

CHECKED BY: SHAWN VOGTMAN

REVISED BY: SCV

DATE REVISED: 01/5/18

X:\237_101_Mathilda\000_CAD\Sheets\MD-Traffic_Handling\MD-Plans\0413000204md017.dgn

LAST REVISION 01-15-18

DATE PLOTTED => 6/20/2018
TIME PLOTTED => 11:14:44 AM

BORDER LAST REVISED 7/2/2010

USERNAME => Eilif
DGN FILE => 0413000204md017.dgn

RELATIVE BORDER SCALE IS IN INCHES 0 1 2 3

UNIT 0000

PROJECT NUMBER & PHASE 0413000204

Dist	COUNTY	ROUTE	POST MILES TOTAL PROJECT	SHEET No.	TOTAL SHEETS
04	SCL	101,237	45.2/45.8, 2.7/3.3	202	736

REGISTERED CIVIL ENGINEER — DATE: 6-13-18

PLANS APPROVAL DATE: 6-20-18

REGISTERED PROFESSIONAL ENGINEER — STEVE LOUPE — No. 63575 — Exp. 9/30/18 — CIVIL — STATE OF CALIFORNIA

THE STATE OF CALIFORNIA OR ITS OFFICERS OR AGENTS SHALL NOT BE RESPONSIBLE FOR THE ACCURACY OR COMPLETENESS OF SCANNED COPIES OF THIS PLAN SHEET.

WMH CORPORATION 50 W San Fernando St Suite 950 San Jose, CA 95113	VTA 3331 N First St Building B San Jose, Ca 95134

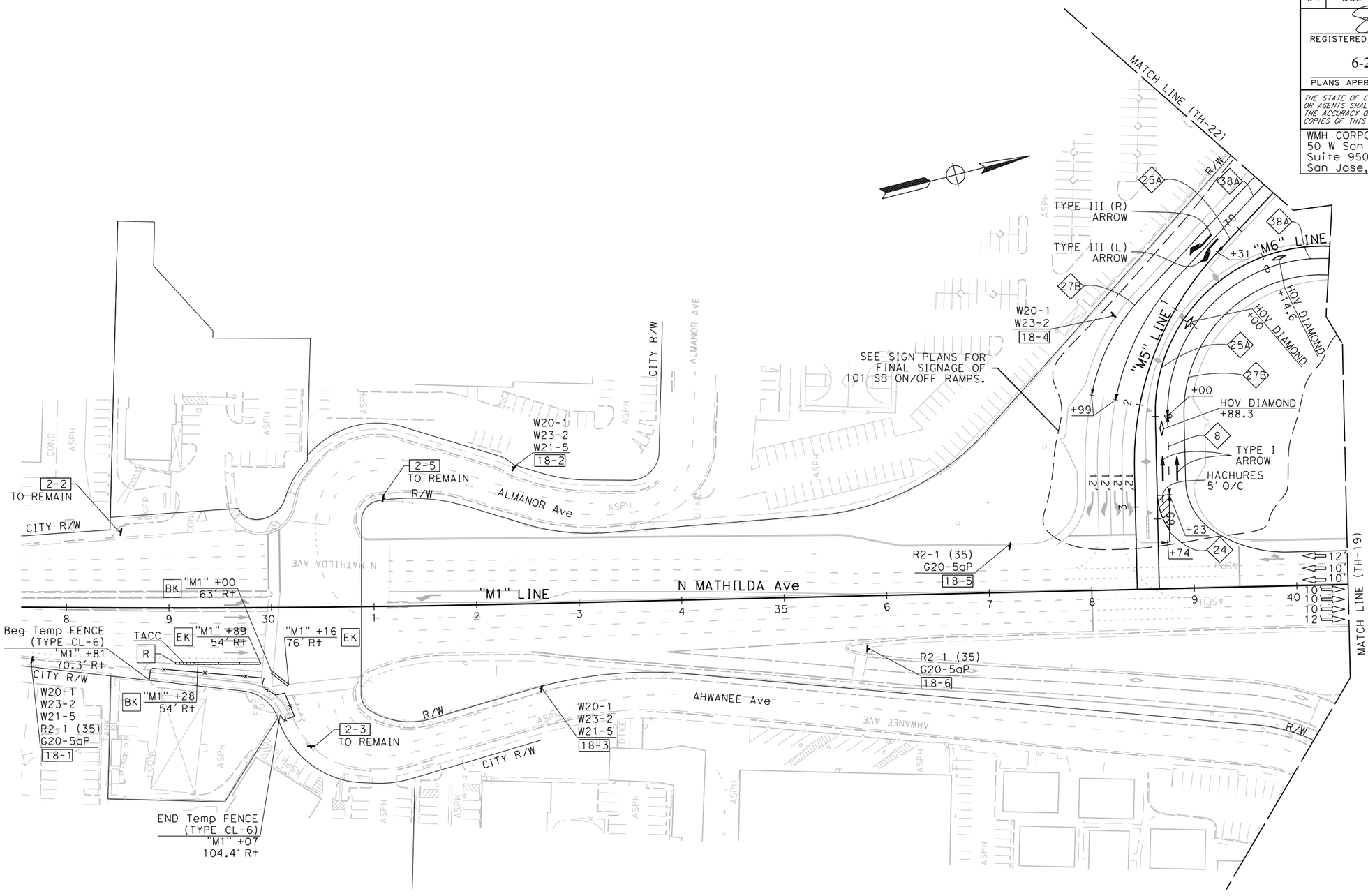

FOR NOTES AND LEGEND, SEE SHEET TH-1

THIS PLAN ACCURATE FOR TRAFFIC HANDLING WORK ONLY.

TRAFFIC HANDLING PLAN

STAGE 1 - PHASE 4

SCALE: 1" = 50'

TH-18

LAST REVISION: DATE PLOTTED => 6/20/2018 TIME PLOTTED => 11:14:47 AM 01-15-18

CALCULATED-DESIGNED BY	CARLOS RODRIGUEZ	REVISED BY	SCV
CHECKED BY	SHAWN VOGTMAN	DATE REVISED	01/5/18

CONSULTANT FUNCTIONAL SUPERVISOR: TIMOTHY J. LEE

STATE OF CALIFORNIA - DEPARTMENT OF TRANSPORTATION

Caltrans

X:\237_101_Mathilda\000_CAD\Sheets\MD-Traffic_Handling\MD-Plans\0413000204md018.dgn

BORDER LAST REVISED 7/2/2010	USERNAME => Eilif DGN FILE => 0413000204md018.dgn	RELATIVE BORDER SCALE IS IN INCHES 0 1 2 3	UNIT 0000	PROJECT NUMBER & PHASE	0413000204

Dist	COUNTY	ROUTE	POST MILES TOTAL PROJECT	SHEET No.	TOTAL SHEETS
04	SCL	101,237	45.2/45.8, 2.7/3.3	203	736

REGISTERED CIVIL ENGINEER — DATE: 6-13-18

PLANS APPROVAL DATE: 6-20-18

STEVE LOUPE No. 63575 Exp. 9/30/18 CIVIL — REGISTERED PROFESSIONAL ENGINEER — STATE OF CALIFORNIA

THE STATE OF CALIFORNIA OR ITS OFFICERS OR AGENTS SHALL NOT BE RESPONSIBLE FOR THE ACCURACY OR COMPLETENESS OF SCANNED COPIES OF THIS PLAN SHEET.

WMH CORPORATION 50 W San Fernando St Suite 950 San Jose, CA 95113	VTA 3331 N First St Building B San Jose, Ca 95134

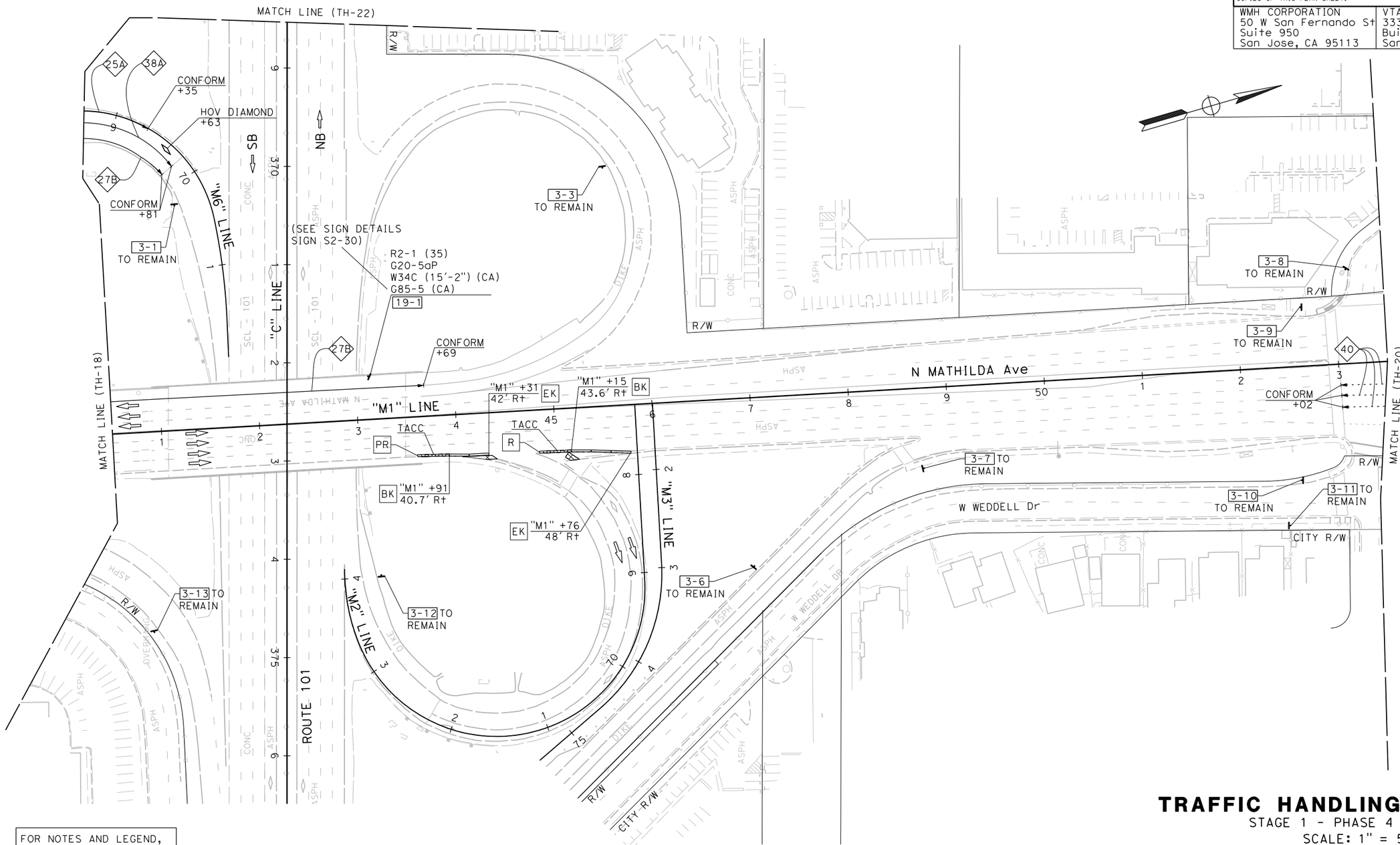

FOR NOTES AND LEGEND, SEE SHEET TH-1

THIS PLAN ACCURATE FOR TRAFFIC HANDLING WORK ONLY.

TRAFFIC HANDLING PLAN

STAGE 1 - PHASE 4

SCALE: 1" = 50'

TH-19

CALCULATED-DESIGNED BY	CARLOS RODRIGUEZ	REVISED BY	SCV
CHECKED BY	SHAWN VOGTMAN	DATE REVISED	01/5/18
CONSULTANT FUNCTIONAL SUPERVISOR	TIMOTHY J. LEE		
STATE OF CALIFORNIA - DEPARTMENT OF TRANSPORTATION			

LAST REVISION 01-15-18 | DATE PLOTTED => 6/20/2018 | TIME PLOTTED => 11:14:49 AM

X:\237_101_Mathilde\000_CAD\Sheets\MD-Traffic_Handling\MD-Plans\0413000204md019.dgn

BORDER LAST REVISED 7/2/2010 | USERNAME => Eilif | DGN FILE => 0413000204md019.dgn | RELATIVE BORDER SCALE IS IN INCHES 0 1 2 3 | UNIT 0000 | PROJECT NUMBER & PHASE 0413000204

Dist	COUNTY	ROUTE	POST MILES TOTAL PROJECT	SHEET No.	TOTAL SHEETS
04	SCL	101,237	45.2/45.8, 2.7/3.3	204	736

6-13-18
REGISTERED CIVIL ENGINEER DATE

6-20-18
PLANS APPROVAL DATE

REGISTERED PROFESSIONAL ENGINEER
STEVE LOUPE
No. 63575
Exp. 9/30/18
CIVIL
STATE OF CALIFORNIA

THE STATE OF CALIFORNIA OR ITS OFFICERS OR AGENTS SHALL NOT BE RESPONSIBLE FOR THE ACCURACY OR COMPLETENESS OF SCANNED COPIES OF THIS PLAN SHEET.

WMH CORPORATION
50 W San Fernando St
Suite 950
San Jose, CA 95113

VTA
3331 N First St
Building B
San Jose, Ca 95134

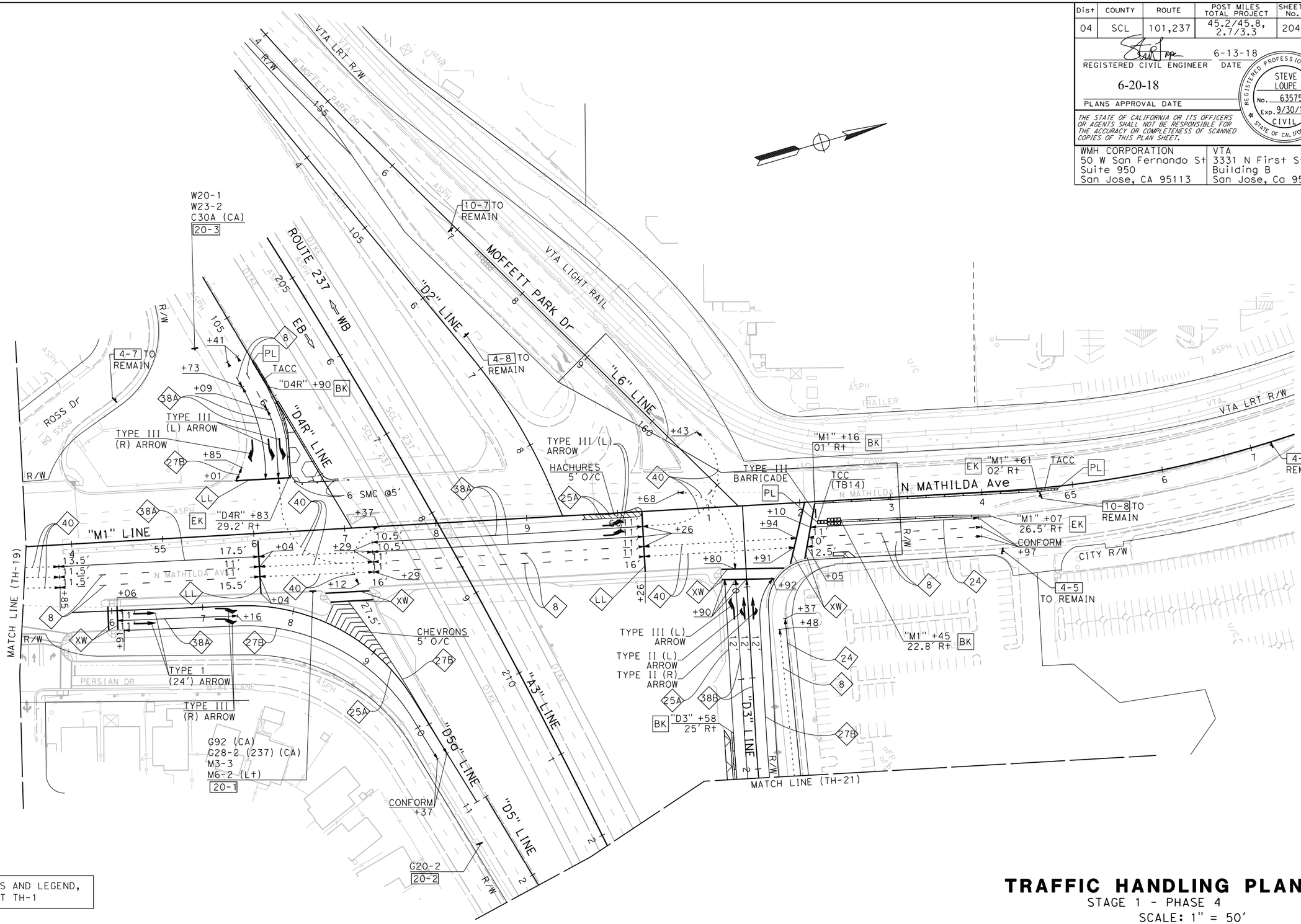

FOR NOTES AND LEGEND, SEE SHEET TH-1

THIS PLAN ACCURATE FOR TRAFFIC HANDLING WORK ONLY.

TRAFFIC HANDLING PLAN

STAGE 1 - PHASE 4
SCALE: 1" = 50'

TH-20

	REVISED BY	DATE REVISED
CALCULATED-DESIGNED BY	SCV	01/5/18
CARLOS RODRIGUEZ		
CHECKED BY		
SHAWN VOGTMAN		
CONSULTANT FUNCTIONAL SUPERVISOR		
TIMOTHY J. LEE		

STATE OF CALIFORNIA - DEPARTMENT OF TRANSPORTATION
Caltrans

LAST REVISION: 01-15-18
DATE PLOTTED => 6/20/2018
TIME PLOTTED => 11:14:52 AM

X:\237_101_Mathilda\000_CAD\Sheets\MD-Traffic_Handling\MD-Plans\0413000204md020.dgn

BORDER LAST REVISED 7/2/2010 | USERNAME => Eilif | DGN FILE => 0413000204md020.dgn | RELATIVE BORDER SCALE IS IN INCHES 0 1 2 3 | UNIT 0000 | PROJECT NUMBER & PHASE 0413000204

Dist	COUNTY	ROUTE	POST MILES TOTAL PROJECT	SHEET No.	TOTAL SHEETS
04	SCL	101,237	45.2/45.8, 2.7/3.3	205	736

6-13-18
REGISTERED CIVIL ENGINEER DATE

6-20-18
PLANS APPROVAL DATE

REGISTERED PROFESSIONAL ENGINEER — STEVE LOUPE — No. 63575 — Exp. 9/30/18 — CIVIL — STATE OF CALIFORNIA

THE STATE OF CALIFORNIA OR ITS OFFICERS OR AGENTS SHALL NOT BE RESPONSIBLE FOR THE ACCURACY OR COMPLETENESS OF SCANNED COPIES OF THIS PLAN SHEET.

WMH CORPORATION
50 W San Fernando St
Suite 950
San Jose, CA 95113

VTA
3331 N First St
Building B
San Jose, Ca 95134

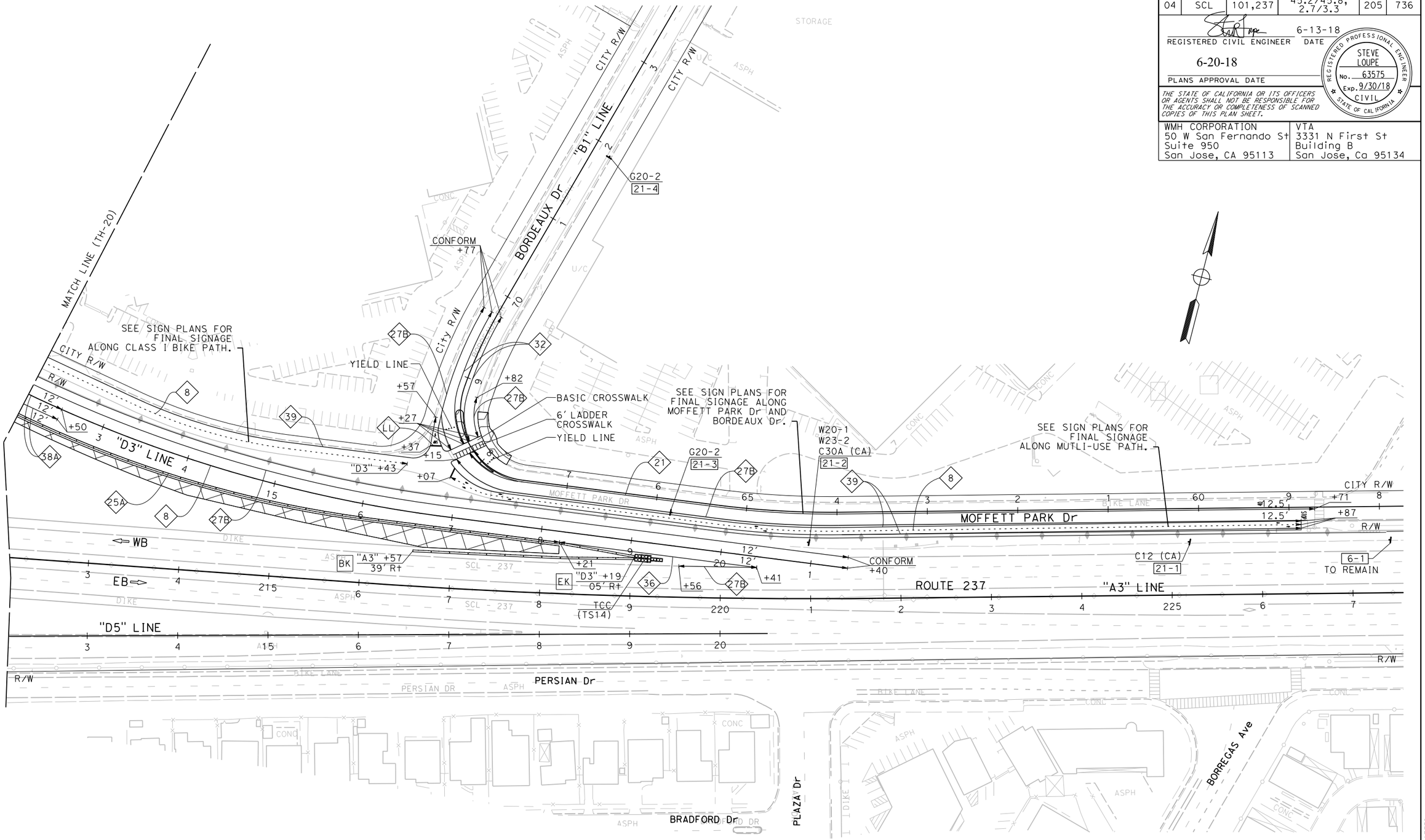

TRAFFIC HANDLING PLAN

STAGE 1 - PHASE 4

SCALE: 1" = 50'

TH-21

FOR NOTES AND LEGEND, SEE SHEET TH-1

THIS PLAN ACCURATE FOR TRAFFIC HANDLING WORK ONLY.

CALCULATED-DESIGNED BY	CARLOS RODRIGUEZ			
CHECKED BY	SHAWN VOGTMAN			
SUPERVISOR	TIMOTHY J. LEE	REVISED BY	SCV	
CONSULTANT FUNCTIONAL		DATE REVISED	01/5/18	

STATE OF CALIFORNIA - DEPARTMENT OF TRANSPORTATION
Caltrans

LAST REVISION 01-15-18
DATE PLOTTED => 6/20/2018
TIME PLOTTED => 11:14:54 AM

X:\237_101_Morhilde\000_CAD\Sheets\MD-Traffic_Handling\MD-Plans\0413000204md021.dgn

BORDER LAST REVISED 7/2/2010 | USERNAME => Eilif | DGN FILE => 0413000204md021.dgn | RELATIVE BORDER SCALE IS IN INCHES 0 1 2 3 | UNIT 0000 | PROJECT NUMBER & PHASE 0413000204

Dist	COUNTY	ROUTE	POST MILES TOTAL PROJECT	SHEET No.	TOTAL SHEETS
04	SCL	101,237	45.2/45.8, 2.7/3.3	206	736

6-13-18
REGISTERED CIVIL ENGINEER DATE

6-20-18
PLANS APPROVAL DATE

REGISTERED PROFESSIONAL ENGINEER
STEVE LOUPE
No. 63575
Exp. 9/30/18
CIVIL
STATE OF CALIFORNIA

THE STATE OF CALIFORNIA OR ITS OFFICERS OR AGENTS SHALL NOT BE RESPONSIBLE FOR THE ACCURACY OR COMPLETENESS OF SCANNED COPIES OF THIS PLAN SHEET.

WMH CORPORATION
50 W San Fernando St
Suite 950
San Jose, CA 95113

VTA
3331 N First St
Building B
San Jose, Ca 95134

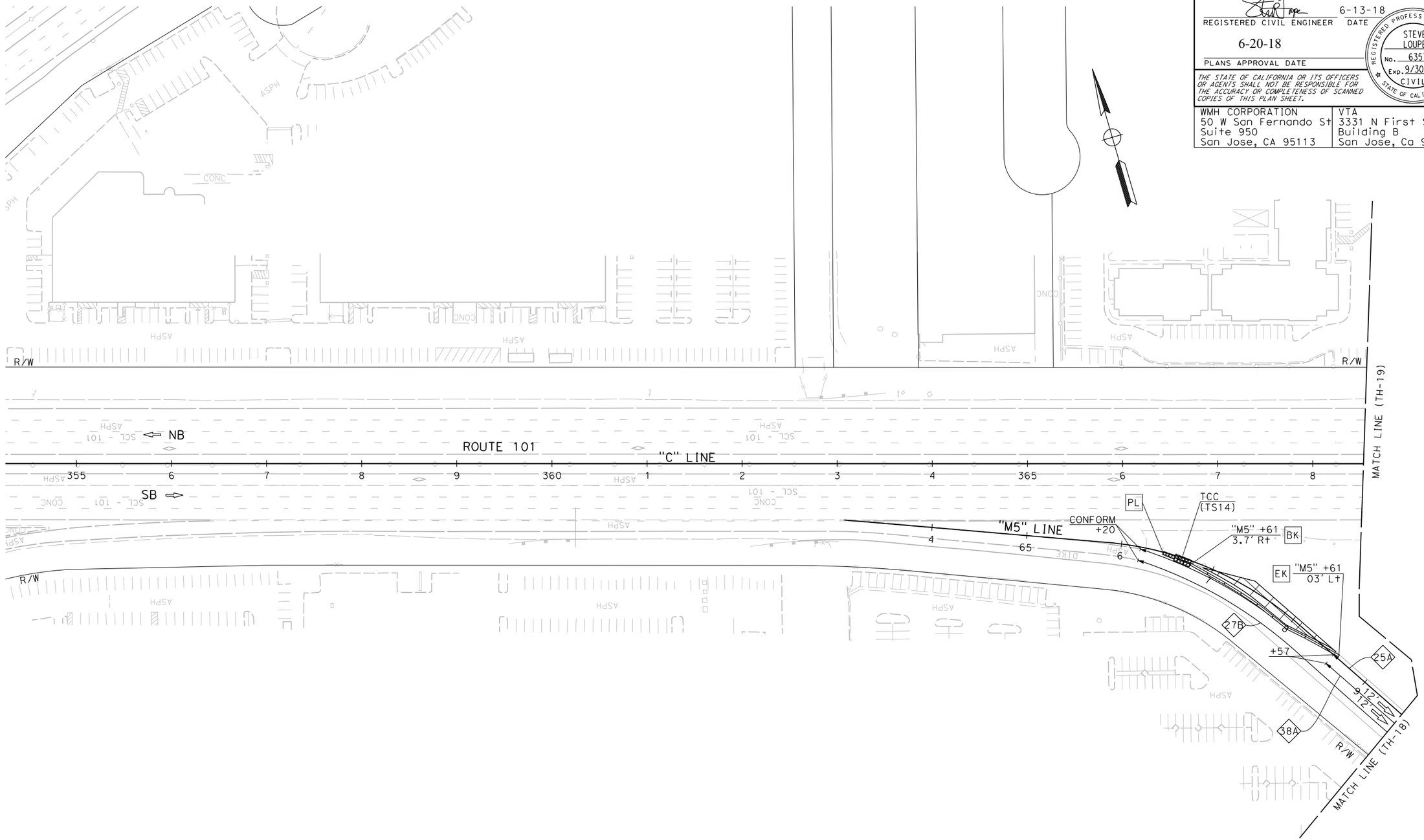

FOR NOTES AND LEGEND, SEE SHEET TH-1

THIS PLAN ACCURATE FOR TRAFFIC HANDLING WORK ONLY.

TRAFFIC HANDLING PLAN

STAGE 1 - PHASE 4

SCALE: 1" = 50'

TH-22

REVISED BY	SCV	
DATE REVISED	01/5/18	
CALCULATED-DESIGNED BY	CARLOS RODRIGUEZ	
CHECKED BY	SHAWN VOGTMAN	
SUPERVISOR	TIMOTHY J. LEE	
CONSULTANT FUNCTIONAL		

STATE OF CALIFORNIA - DEPARTMENT OF TRANSPORTATION

Caltrans®

LAST REVISION 01-15-18
DATE PLOTTED => 6/20/2018
TIME PLOTTED => 11:14:57 AM

X:\237_101_Mathilda\000_CAD\Sheets\MD-Traffic_Handling\MD-Plans\0413000204md022.dgn

BORDER LAST REVISED 7/2/2010 | USERNAME => Eiiif | DGN FILE => 0413000204md022.dgn | RELATIVE BORDER SCALE IS IN INCHES 0 1 2 3 | UNIT 0000 | PROJECT NUMBER & PHASE 0413000204

Dist	COUNTY	ROUTE	POST MILES TOTAL PROJECT	SHEET No.	TOTAL SHEETS
04	SCL	101,237	45.2/45.8, 2.7/3.3	207	736

REGISTERED CIVIL ENGINEER — 6-13-18 DATE

PLANS APPROVAL DATE — 6-20-18

REGISTERED PROFESSIONAL ENGINEER — STEVE LOUPE — No. 63575 — Exp. 9/30/18 — CIVIL — STATE OF CALIFORNIA

THE STATE OF CALIFORNIA OR ITS OFFICERS OR AGENTS SHALL NOT BE RESPONSIBLE FOR THE ACCURACY OR COMPLETENESS OF SCANNED COPIES OF THIS PLAN SHEET.

WMH CORPORATION 50 W San Fernando St Suite 950 San Jose, CA 95113	VTA 3331 N First St Building B San Jose, Ca 95134

SECTION "A-A" - STAGE 2 - PHASE 1
MATHILDA AVENUE

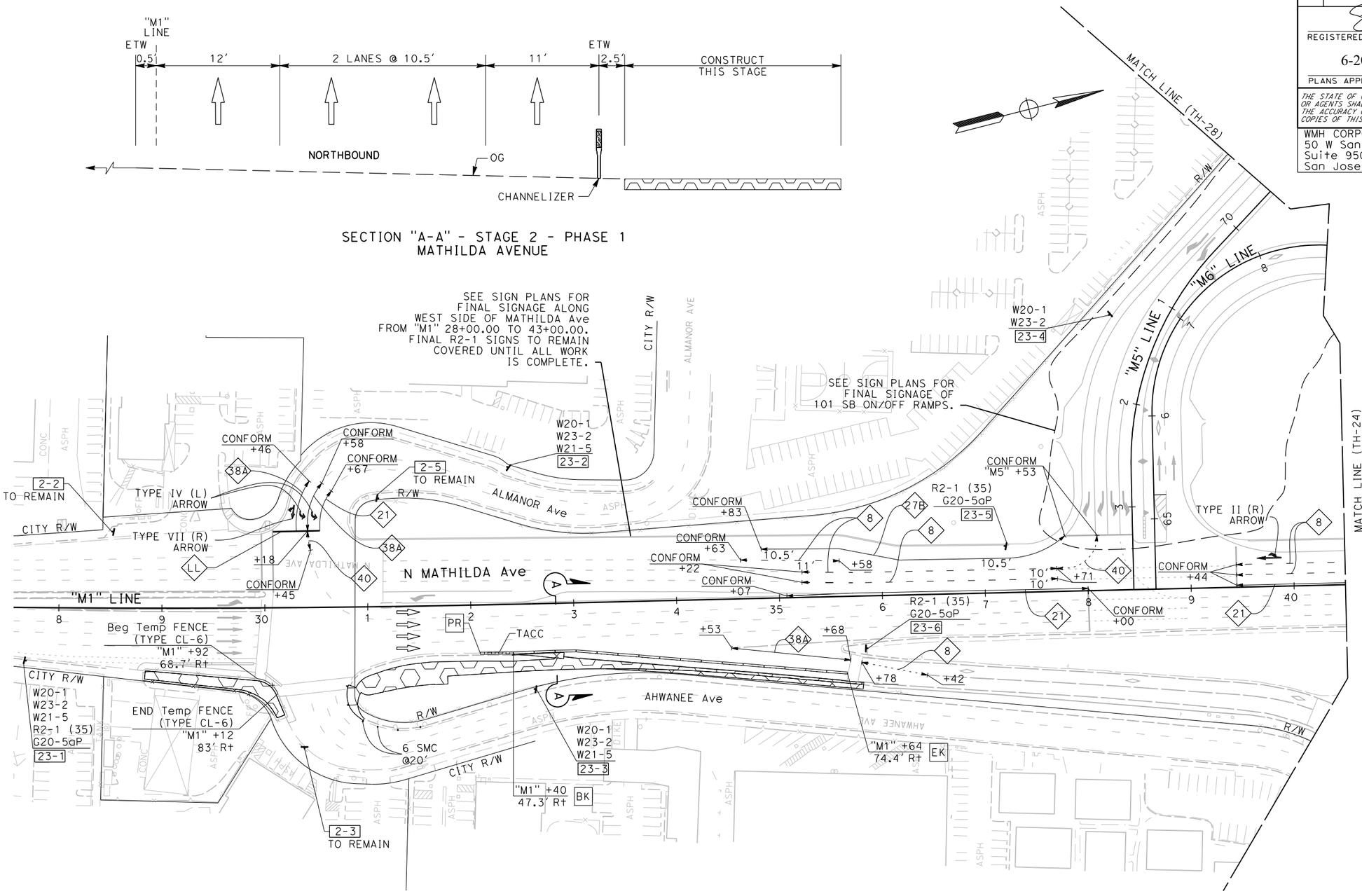

FOR NOTES AND LEGEND, SEE SHEET TH-1

THIS PLAN ACCURATE FOR TRAFFIC HANDLING WORK ONLY.

TRAFFIC HANDLING PLAN

STAGE 2 - PHASE 1

SCALE: 1" = 50'

TH-23

REVISED BY	SCV	LAST REVISION	DATE PLOTTED => 6/20/2018
DATE REVISED	01/5/18	01-15-18	TIME PLOTTED => 11:15:00 AM
CALCULATED-DESIGNED BY	CARLOS RODRIGUEZ		
CHECKED BY	SHAWN VOGTMAN		
CONSULTANT FUNCTIONAL SUPERVISOR	TIMOTHY J. LEE		

STATE OF CALIFORNIA - DEPARTMENT OF TRANSPORTATION — Caltrans

X:\237_101_Mathilda\000_CAD\Sheets\MD-Traffic_Handling\MD-Plans\0413000204md023.dgn

BORDER LAST REVISED 7/2/2010	USERNAME => Eilif DGN FILE => 0413000204md023.dgn	RELATIVE BORDER SCALE IS IN INCHES 0 1 2 3	UNIT 0000	PROJECT NUMBER & PHASE	0413000204

Dist	COUNTY	ROUTE	POST MILES TOTAL PROJECT	SHEET No.	TOTAL SHEETS
04	SCL	101,237	45.2/45.8, 2.7/3.3	208	736

REGISTERED CIVIL ENGINEER — 6-13-18 DATE

6-20-18
PLANS APPROVAL DATE

STEVE LOUPE No. 63575 Exp. 9/30/18 CIVIL — REGISTERED PROFESSIONAL ENGINEER — STATE OF CALIFORNIA

THE STATE OF CALIFORNIA OR ITS OFFICERS OR AGENTS SHALL NOT BE RESPONSIBLE FOR THE ACCURACY OR COMPLETENESS OF SCANNED COPIES OF THIS PLAN SHEET.

WMH CORPORATION 50 W San Fernando St Suite 950 San Jose, CA 95113	VTA 3331 N First St Building B San Jose, Ca 95134

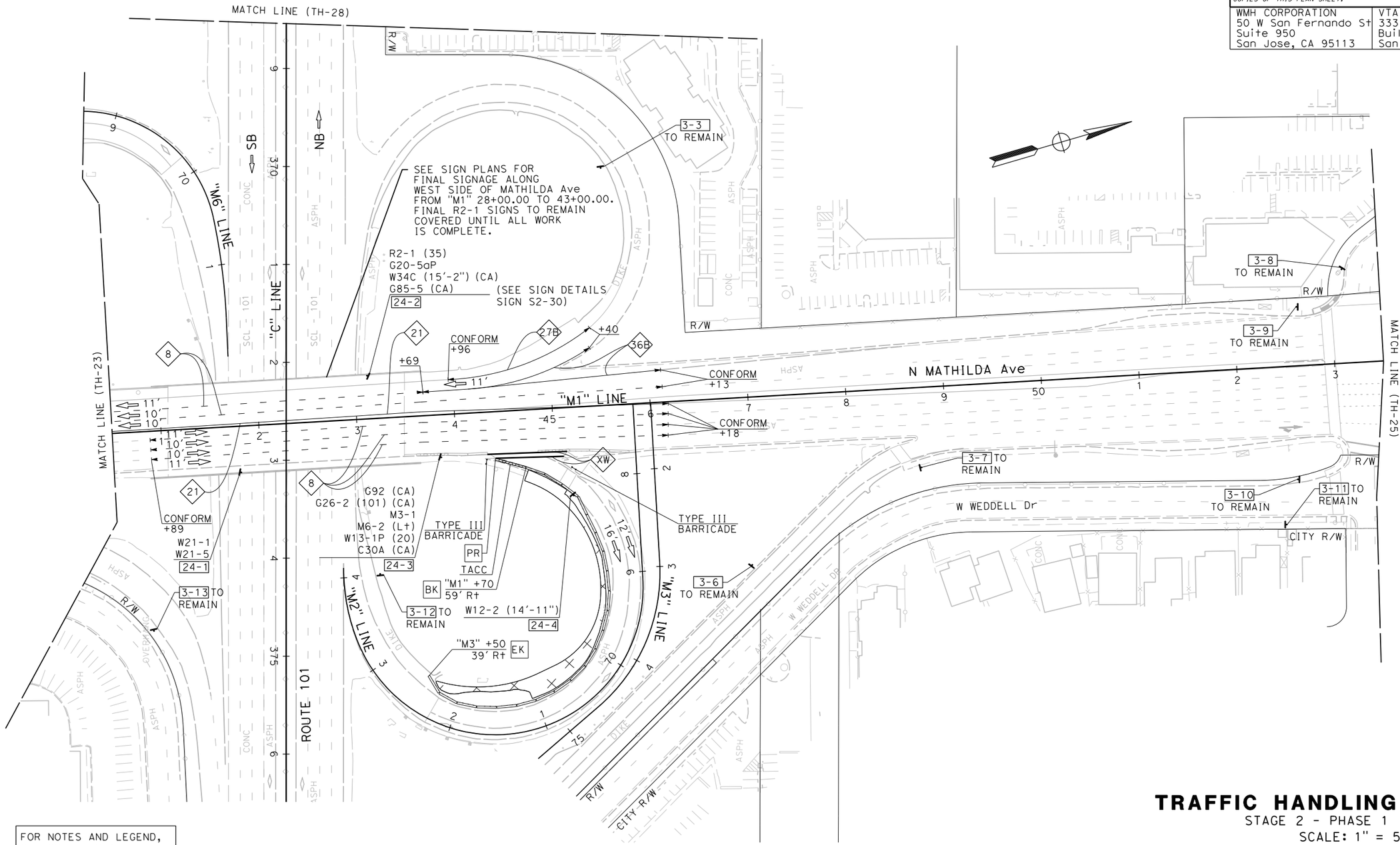

FOR NOTES AND LEGEND, SEE SHEET TH-1

THIS PLAN ACCURATE FOR TRAFFIC HANDLING WORK ONLY.

TRAFFIC HANDLING PLAN

STAGE 2 - PHASE 1

SCALE: 1" = 50'

TH-24

CALCULATED-DESIGNED BY	CARLOS RODRIGUEZ	REVISED BY	SCV
CHECKED BY	SHAWN VOGTMAN	DATE REVISED	01/5/18
CONSULTANT FUNCTIONAL SUPERVISOR	TIMOTHY J. LEE		

STATE OF CALIFORNIA - DEPARTMENT OF TRANSPORTATION — Caltrans

LAST REVISION: DATE PLOTTED => 6/20/2018; TIME PLOTTED => 11:15:03 AM 01-15-18

X:\237_101_Mathilda\000_CAD\Sheets\MD-Traffic_Handling\MD-Plans\0413000204md024.dgn

BORDER LAST REVISED 7/2/2010 | USERNAME => Eilif; DGN FILE => 0413000204md024.dgn | RELATIVE BORDER SCALE IS IN INCHES 0 1 2 3 | UNIT 0000 | PROJECT NUMBER & PHASE 0413000204

Dist	COUNTY	ROUTE	POST MILES TOTAL PROJECT	SHEET No.	TOTAL SHEETS
04	SCL	101,237	45.2/45.8, 2.7/3.3	209	736

REGISTERED CIVIL ENGINEER 6-13-18 DATE

6-20-18
PLANS APPROVAL DATE

REGISTERED PROFESSIONAL ENGINEER STEVE LOUPE No. 63575 Exp. 9/30/18 CIVIL STATE OF CALIFORNIA

THE STATE OF CALIFORNIA OR ITS OFFICERS OR AGENTS SHALL NOT BE RESPONSIBLE FOR THE ACCURACY OR COMPLETENESS OF SCANNED COPIES OF THIS PLAN SHEET.

WMH CORPORATION
50 W San Fernando St
Suite 950
San Jose, CA 95113

VTA
3331 N First St
Building B
San Jose, Ca 95134

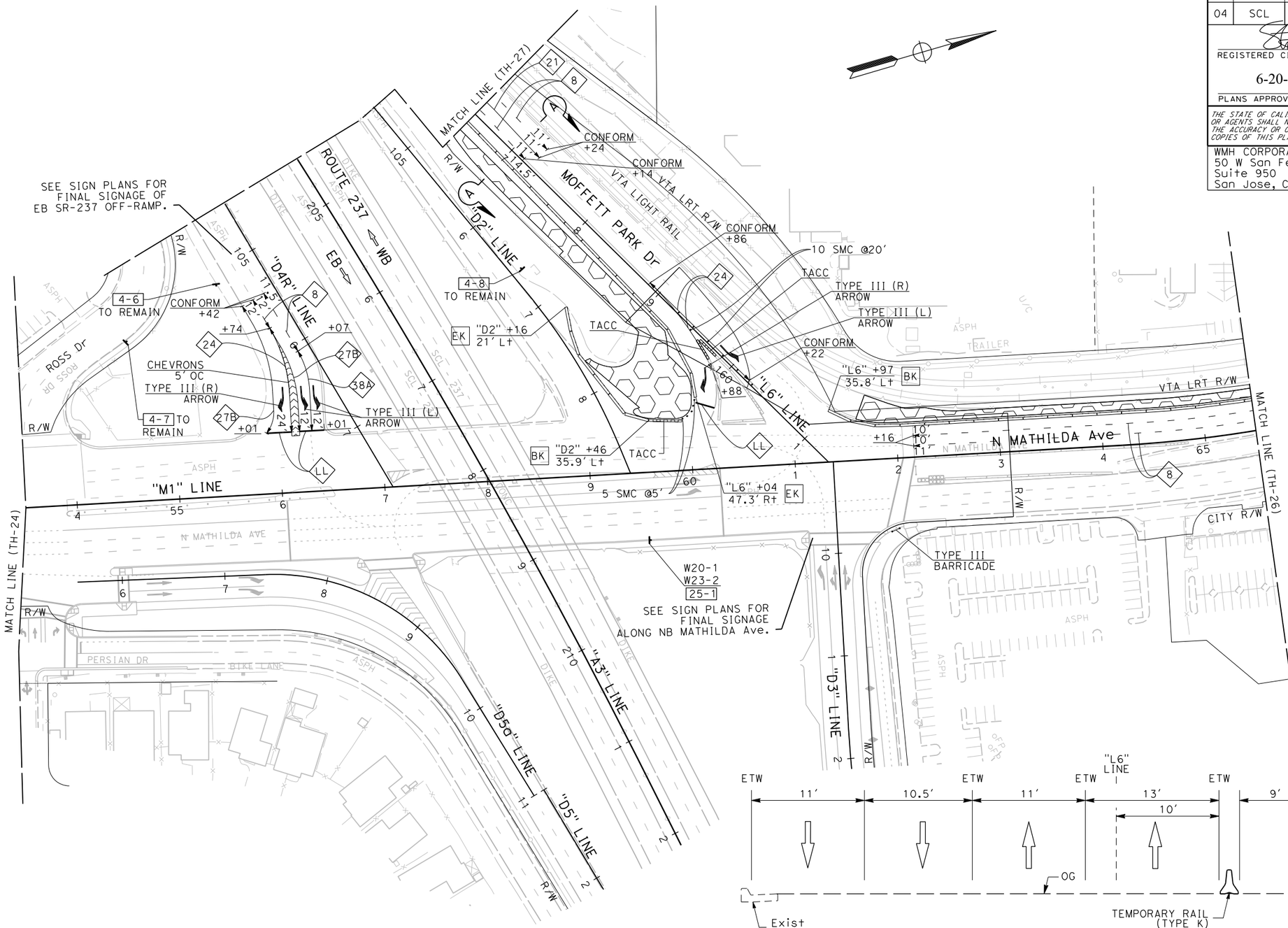

SECTION "A-A" - STAGE 2 - PHASE 1
MOFFETT PARK Dr

FOR NOTES AND LEGEND, SEE SHEET TH-1

THIS PLAN ACCURATE FOR TRAFFIC HANDLING WORK ONLY.

TRAFFIC HANDLING PLAN

STAGE 2 - PHASE 1
SCALE: 1" = 50'

TH-25

STATE OF CALIFORNIA - DEPARTMENT OF TRANSPORTATION
Caltrans
CONSULTANT FUNCTIONAL SUPERVISOR: TIMOTHY J. LEE
CALCULATED-DESIGNED BY: CARLOS RODRIGUEZ
CHECKED BY: SHAWN VOGTMAN
REVISED BY: SCV
DATE REVISED: 01/5/18

X:\237_101_Mathilda\000_CAD\Sheets\MD-Traffic_Handling\MD-Plans\0413000204md025.dgn

LAST REVISION 01-15-18
DATE PLOTTED => 6/20/2018
TIME PLOTTED => 11:15:05 AM

BORDER LAST REVISED 7/2/2010
USERNAME => Eilif
DGN FILE => 0413000204md025.dgn
RELATIVE BORDER SCALE IS IN INCHES 0 1 2 3
UNIT 0000
PROJECT NUMBER & PHASE 0413000204

Dist	COUNTY	ROUTE	POST MILES TOTAL PROJECT	SHEET No.	TOTAL SHEETS
04	SCL	101,237	45.2/45.8, 2.7/3.3	210	736

REGISTERED CIVIL ENGINEER — DATE 6-13-18

PLANS APPROVAL DATE 6-20-18

REGISTERED PROFESSIONAL ENGINEER — STEVE LOUPE — No. 63575 — Exp. 9/30/18 — CIVIL — STATE OF CALIFORNIA

THE STATE OF CALIFORNIA OR ITS OFFICERS OR AGENTS SHALL NOT BE RESPONSIBLE FOR THE ACCURACY OR COMPLETENESS OF SCANNED COPIES OF THIS PLAN SHEET.

WMH CORPORATION
50 W San Fernando St
Suite 950
San Jose, CA 95113

VTA
3331 N First St
Building B
San Jose, Ca 95134

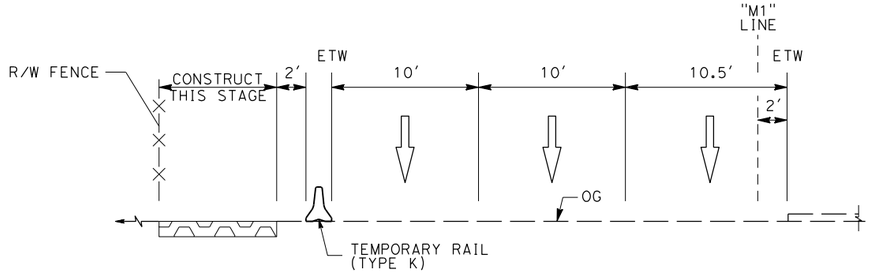

SECTION "B-B" - STAGE 2 - PHASE 1
MATHILDA AVENUE

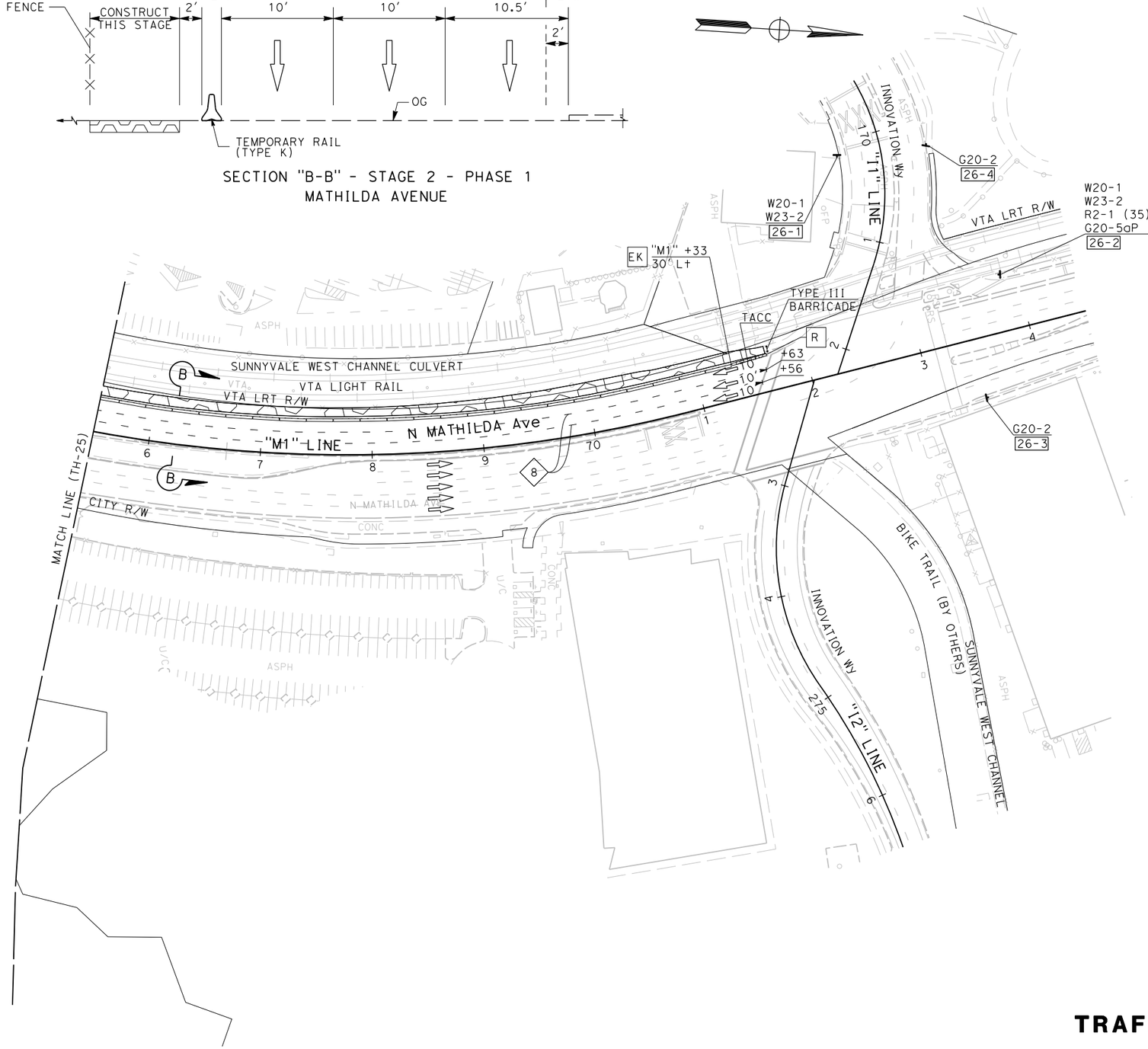

FOR NOTES AND LEGEND, SEE SHEET TH-1

THIS PLAN ACCURATE FOR TRAFFIC HANDLING WORK ONLY.

TRAFFIC HANDLING PLAN

STAGE 2 - PHASE 1
SCALE: 1" = 50'

TH-26

REVISED BY	DATE REVISED
SCV	01/5/18

CALCULATED-DESIGNED BY: CARLOS RODRIGUEZ
CHECKED BY: SHAWN VOGTMAN

CONSULTANT FUNCTIONAL SUPERVISOR: TIMOTHY J. LEE

STATE OF CALIFORNIA - DEPARTMENT OF TRANSPORTATION

LAST REVISION: DATE PLOTTED => 6/20/2018
01-15-18 TIME PLOTTED => 11:15:08 AM

X:\237_101_Mathilda\000_CAD\Sheets\MP-Traffic_Handling\MP-Plans\0413000204md026.dgn

BORDER LAST REVISED 7/2/2010 | USERNAME => Eilif | DGN FILE => 0413000204md026.dgn | RELATIVE BORDER SCALE IS IN INCHES 0 1 2 3 | UNIT 0000 | PROJECT NUMBER & PHASE 0413000204

Dist	COUNTY	ROUTE	POST MILES TOTAL PROJECT	SHEET No.	TOTAL SHEETS
04	SCL	101,237	45.2/45.8, 2.7/3.3	211	736

REGISTERED CIVIL ENGINEER 6-13-18 DATE

6-20-18
PLANS APPROVAL DATE

REGISTERED PROFESSIONAL ENGINEER STEVE LOUPE No. 63575 Exp. 9/30/18 CIVIL STATE OF CALIFORNIA

THE STATE OF CALIFORNIA OR ITS OFFICERS OR AGENTS SHALL NOT BE RESPONSIBLE FOR THE ACCURACY OR COMPLETENESS OF SCANNED COPIES OF THIS PLAN SHEET.

WMH CORPORATION
50 W San Fernando St
Suite 950
San Jose, CA 95113

VTA
3331 N First St
Building B
San Jose, Ca 95134

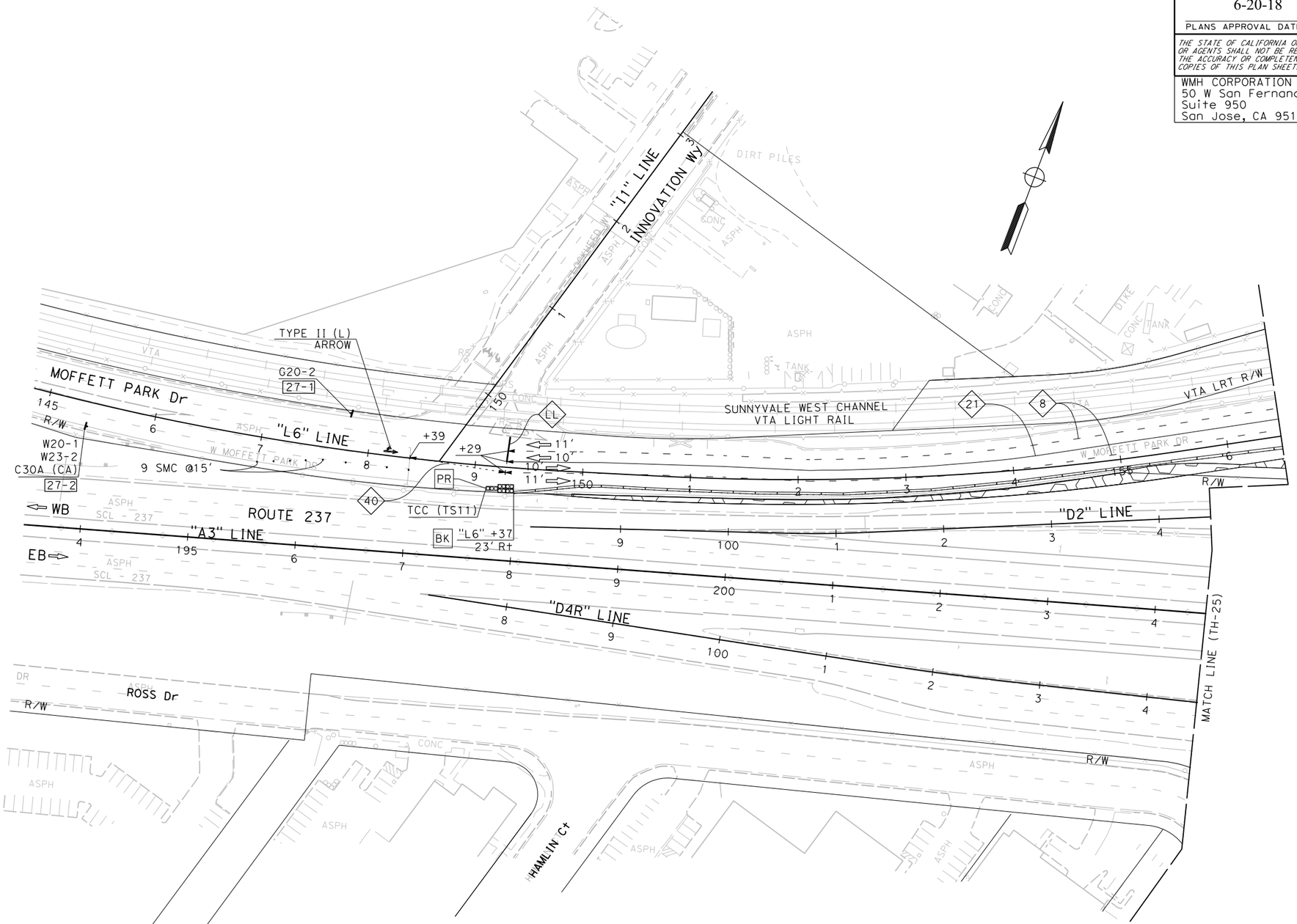

FOR NOTES AND LEGEND, SEE SHEET TH-1

THIS PLAN ACCURATE FOR TRAFFIC HANDLING WORK ONLY.

TRAFFIC HANDLING PLAN

STAGE 2 - PHASE 1

SCALE: 1" = 50'

TH-27

STATE OF CALIFORNIA - DEPARTMENT OF TRANSPORTATION

Caltrans

CALCULATED-DESIGNED BY: CARLOS RODRIGUEZ
CHECKED BY: SHAWN VOGTMAN
REVISED BY: SCV
DATE REVISED: 01/5/18

CONSULTANT FUNCTIONAL SUPERVISOR: TIMOTHY J. LEE

X:\237_101_Mathilda\000_CAD\Sheets\MD-Traffic_Handling\MD-Plans\0413000204md027.dgn

LAST REVISION 01-15-18
DATE PLOTTED => 6/20/2018
TIME PLOTTED => 11:15:12 AM

BORDER LAST REVISED 7/2/2010
USERNAME => Eilif
DGN FILE => 0413000204md027.dgn
RELATIVE BORDER SCALE IS IN INCHES 0 1 2 3
UNIT 0000
PROJECT NUMBER & PHASE 0413000204

Dist	COUNTY	ROUTE	POST MILES TOTAL PROJECT	SHEET No.	TOTAL SHEETS
04	SCL	101,237	45.2/45.8, 2.7/3.3	212	736

REGISTERED CIVIL ENGINEER — DATE: 6-13-18

PLANS APPROVAL DATE: 6-20-18

STEVE LOUPE No. 63575 Exp. 9/30/18 CIVIL — REGISTERED PROFESSIONAL ENGINEER — STATE OF CALIFORNIA

THE STATE OF CALIFORNIA OR ITS OFFICERS OR AGENTS SHALL NOT BE RESPONSIBLE FOR THE ACCURACY OR COMPLETENESS OF SCANNED COPIES OF THIS PLAN SHEET.

WMH CORPORATION	VTA
50 W San Fernando St Suite 950 San Jose, CA 95113	3331 N First St Building B San Jose, Ca 95134

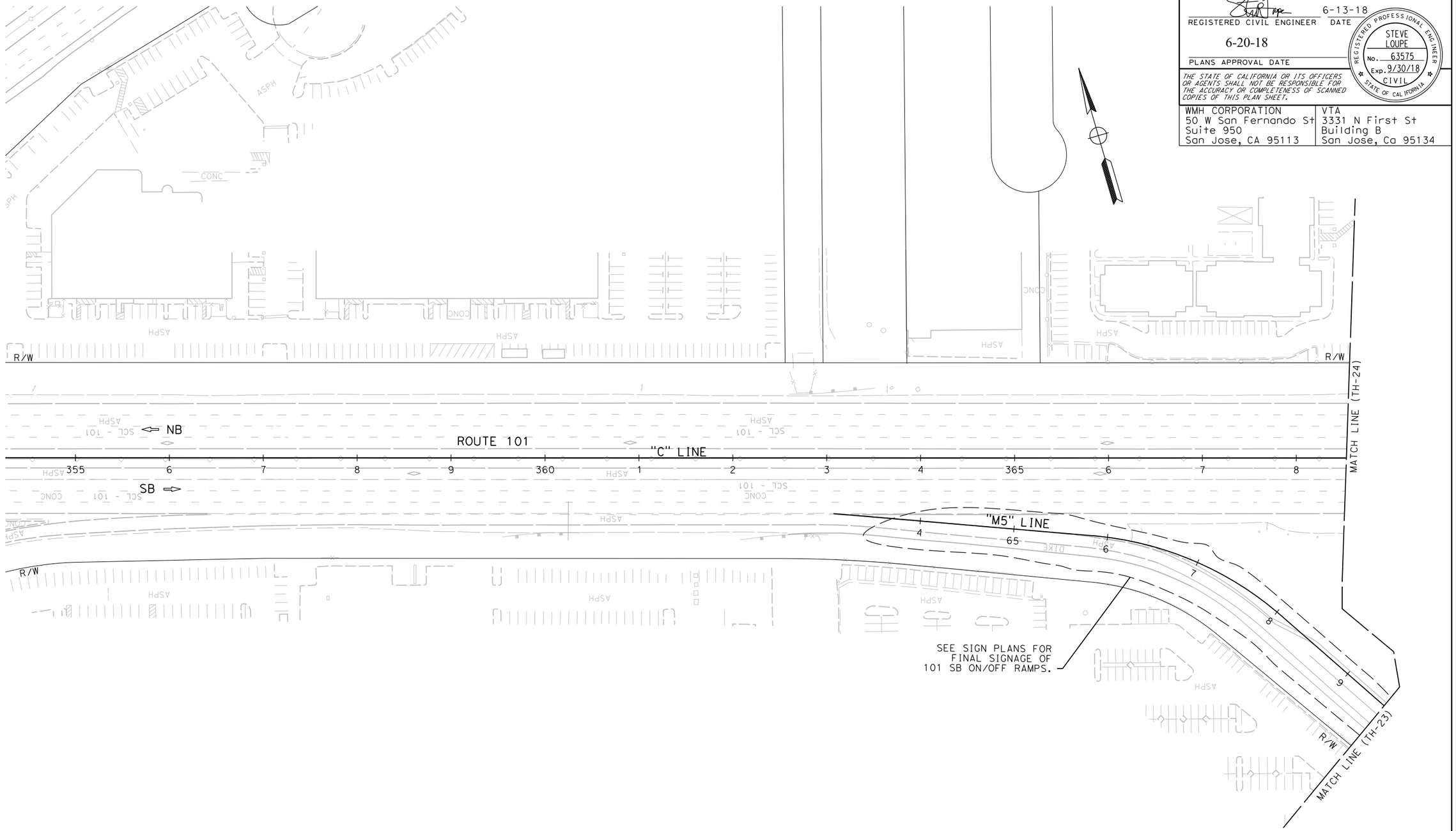

FOR NOTES AND LEGEND, SEE SHEET TH-1

THIS PLAN ACCURATE FOR TRAFFIC HANDLING WORK ONLY.

TRAFFIC HANDLING PLAN

STAGE 2 - PHASE 1

SCALE: 1" = 50'

TH-28

REVISED BY	DATE REVISED
SCV	01/5/18

CALCULATED-DESIGNED BY: CARLOS RODRIGUEZ

CHECKED BY: SHAWN VOGTMAN

SUPERVISOR: TIMOTHY J. LEE

CONSULTANT FUNCTIONAL SUPERVISOR

STATE OF CALIFORNIA - DEPARTMENT OF TRANSPORTATION

Caltrans®

X:\237_101_Mathilda\000_CAD\Sheets\MD-Traffic_Handling\MD-Plans\0413000204md028.dgn

LAST REVISION: DATE PLOTTED => 6/20/2018; TIME PLOTTED => 11:15:17 AM

BORDER LAST REVISED 7/2/2010 | USERNAME => Eiiif; DGN FILE => 0413000204md028.dgn | RELATIVE BORDER SCALE IS IN INCHES 0 1 2 3 | UNIT 0000 | PROJECT NUMBER & PHASE 0413000204

Dist	COUNTY	ROUTE	POST MILES TOTAL PROJECT	SHEET No.	TOTAL SHEETS
04	SCL	101,237	45.2/45.8, 2.7/3.3	213	736

REGISTERED CIVIL ENGINEER — DATE: 6-13-18

PLANS APPROVAL DATE: 6-20-18

REGISTERED PROFESSIONAL ENGINEER — STEVE LOUPE — No. 63575 — Exp. 9/30/18 — CIVIL — STATE OF CALIFORNIA

THE STATE OF CALIFORNIA OR ITS OFFICERS OR AGENTS SHALL NOT BE RESPONSIBLE FOR THE ACCURACY OR COMPLETENESS OF SCANNED COPIES OF THIS PLAN SHEET.

WMH CORPORATION
50 W San Fernando St
Suite 950
San Jose, CA 95113

VTA
3331 N First St
Building B
San Jose, Ca 95134

REVISED BY	DATE REVISED
SCV	01/5/18

CALCULATED-DESIGNED BY: CARLOS RODRIGUEZ
CHECKED BY: SHAWN VOGTMAN

STATE OF CALIFORNIA - DEPARTMENT OF TRANSPORTATION
CONSULTANT FUNCTIONAL SUPERVISOR: TIMOTHY J. LEE

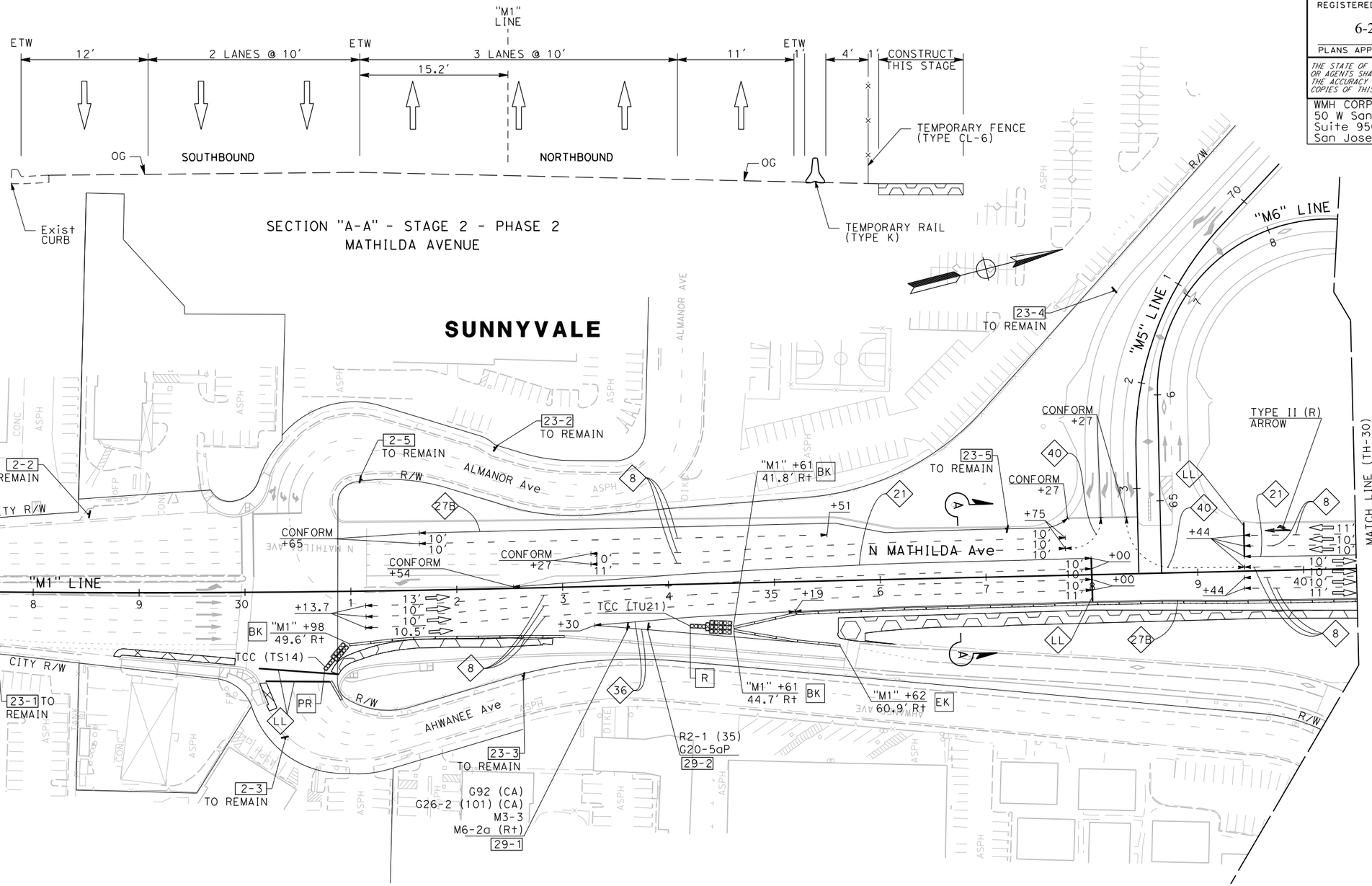

FOR NOTES AND LEGEND, SEE SHEET TH-1

THIS PLAN ACCURATE FOR TRAFFIC HANDLING WORK ONLY.

TRAFFIC HANDLING PLAN

STAGE 2 - PHASE 2

SCALE: 1" = 50′

TH-29

LAST REVISION: DATE PLOTTED => 6/20/2018
01-15-18 TIME PLOTTED => 11:15:23 AM

X:\237_101_Mathilda\000_CAD\Sheets\MD-Traffic_Handling\MD-Plans\0413000204md029.dgn

BORDER LAST REVISED 7/2/2010 | USERNAME => Eilif | DGN FILE => 0413000204md029.dgn | RELATIVE BORDER SCALE IS IN INCHES 0 1 2 3 | UNIT 0000 | PROJECT NUMBER & PHASE 0413000204

Dist	COUNTY	ROUTE	POST MILES TOTAL PROJECT	SHEET No.	TOTAL SHEETS
04	SCL	101,237	45.2/45.8, 2.7/3.3	214	736

REGISTERED CIVIL ENGINEER — 6-13-18 DATE

STEVE LOUPE No. 63575 Exp. 9/30/18 CIVIL — REGISTERED PROFESSIONAL ENGINEER — STATE OF CALIFORNIA

6-20-18
PLANS APPROVAL DATE

THE STATE OF CALIFORNIA OR ITS OFFICERS OR AGENTS SHALL NOT BE RESPONSIBLE FOR THE ACCURACY OR COMPLETENESS OF SCANNED COPIES OF THIS PLAN SHEET.

WMH CORPORATION
50 W San Fernando St
Suite 950
San Jose, CA 95113

VTA
3331 N First St
Building B
San Jose, Ca 95134

CALCULATED-DESIGNED BY	CARLOS RODRIGUEZ	REVISED BY	SCV
CHECKED BY	SHAWN VOGTMAN	DATE REVISED	01/5/18
CONSULTANT FUNCTIONAL SUPERVISOR	TIMOTHY J. LEE		

STATE OF CALIFORNIA - DEPARTMENT OF TRANSPORTATION

Caltrans

X:\237_101_Mathilda\000_CAD\Sheets\MD-Traffic_Handling\MD-Plans\0413000204md030.dgn

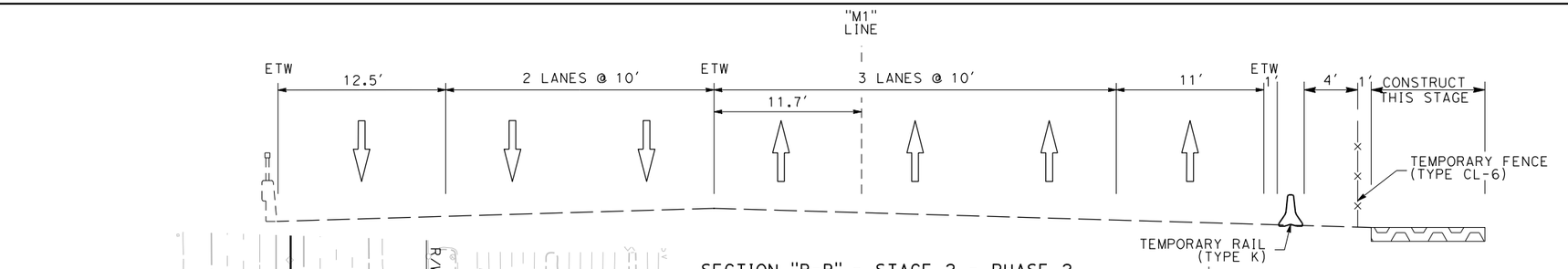

SECTION "B-B" - STAGE 2 - PHASE 2
MATHILDA AVENUE (UC BRIDGE No. 37-179)

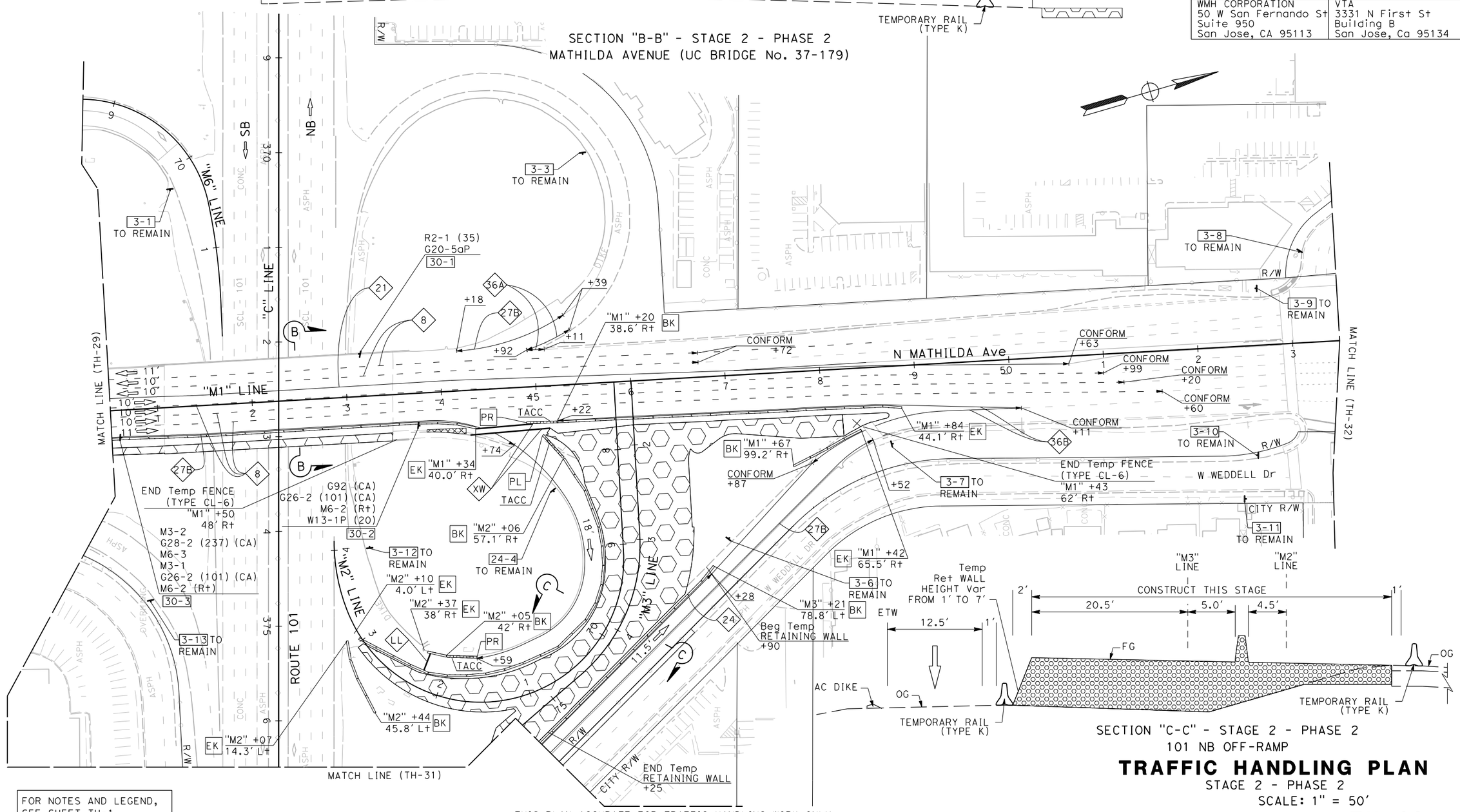

SECTION "C-C" - STAGE 2 - PHASE 2
101 NB OFF-RAMP

FOR NOTES AND LEGEND, SEE SHEET TH-1

THIS PLAN ACCURATE FOR TRAFFIC HANDLING WORK ONLY.

TRAFFIC HANDLING PLAN

STAGE 2 - PHASE 2
SCALE: 1" = 50'

TH-30

LAST REVISION: DATE PLOTTED => 6/20/2018
01-15-18 TIME PLOTTED => 11:15:27 AM

Dist	COUNTY	ROUTE	POST MILES TOTAL PROJECT	SHEET No.	TOTAL SHEETS
04	SCL	101,237	45.2/45.8, 2.7/3.3	215	736

6-13-18
REGISTERED CIVIL ENGINEER — DATE

6-20-18
PLANS APPROVAL DATE

REGISTERED PROFESSIONAL ENGINEER
STEVE LOUPE
No. 63575
Exp. 9/30/18
CIVIL
STATE OF CALIFORNIA

THE STATE OF CALIFORNIA OR ITS OFFICERS OR AGENTS SHALL NOT BE RESPONSIBLE FOR THE ACCURACY OR COMPLETENESS OF SCANNED COPIES OF THIS PLAN SHEET.

WMH CORPORATION
50 W San Fernando St
Suite 950
San Jose, CA 95113

VTA
3331 N First St
Building B
San Jose, Ca 95134

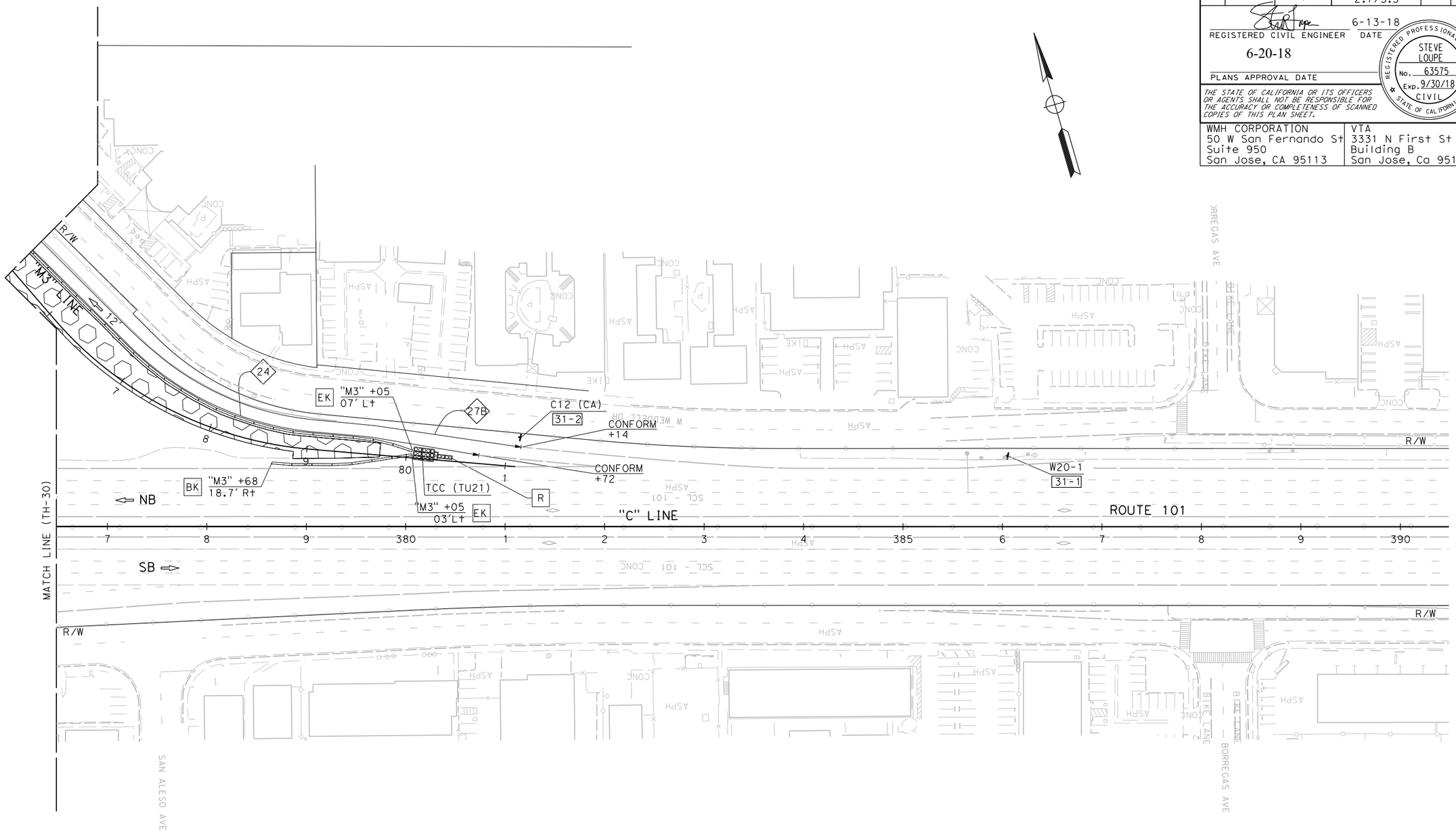

FOR NOTES AND LEGEND, SEE SHEET TH-1

THIS PLAN ACCURATE FOR TRAFFIC HANDLING WORK ONLY.

TRAFFIC HANDLING PLAN

STAGE 2 - PHASE 2

SCALE: 1" = 50'

TH-31

CALCULATED-DESIGNED BY	CARLOS RODRIGUEZ
CHECKED BY	SHAWN VOGTMAN
REVISED BY	SCV
DATE REVISED	01/5/18

STATE OF CALIFORNIA - DEPARTMENT OF TRANSPORTATION
CONSULTANT FUNCTIONAL SUPERVISOR: TIMOTHY J. LEE

LAST REVISION 01-15-18
DATE PLOTTED => 6/20/2018
TIME PLOTTED => 11:15:31 AM

X:\237_101_Mathilda\000_CAD\Sheets\MD-Traffic_Handling\MD-Plans\0413000204md031.dgn

BORDER LAST REVISED 7/2/2010 | USERNAME => Eilif | DGN FILE => 0413000204md031.dgn | RELATIVE BORDER SCALE IS IN INCHES 0 1 2 3 | UNIT 0000 | PROJECT NUMBER & PHASE 0413000204

Dist	COUNTY	ROUTE	POST MILES TOTAL PROJECT	SHEET No.	TOTAL SHEETS
04	SCL	101,237	45.2/45.8, 2.7/3.3	216	736

REGISTERED CIVIL ENGINEER — 6-13-18 DATE

6-20-18
PLANS APPROVAL DATE

REGISTERED PROFESSIONAL ENGINEER — STEVE LOUPE — No. 63575 — Exp. 9/30/18 — CIVIL — STATE OF CALIFORNIA

THE STATE OF CALIFORNIA OR ITS OFFICERS OR AGENTS SHALL NOT BE RESPONSIBLE FOR THE ACCURACY OR COMPLETENESS OF SCANNED COPIES OF THIS PLAN SHEET.

WMH CORPORATION
50 W San Fernando St
Suite 950
San Jose, CA 95113

VTA
3331 N First St
Building B
San Jose, Ca 95134

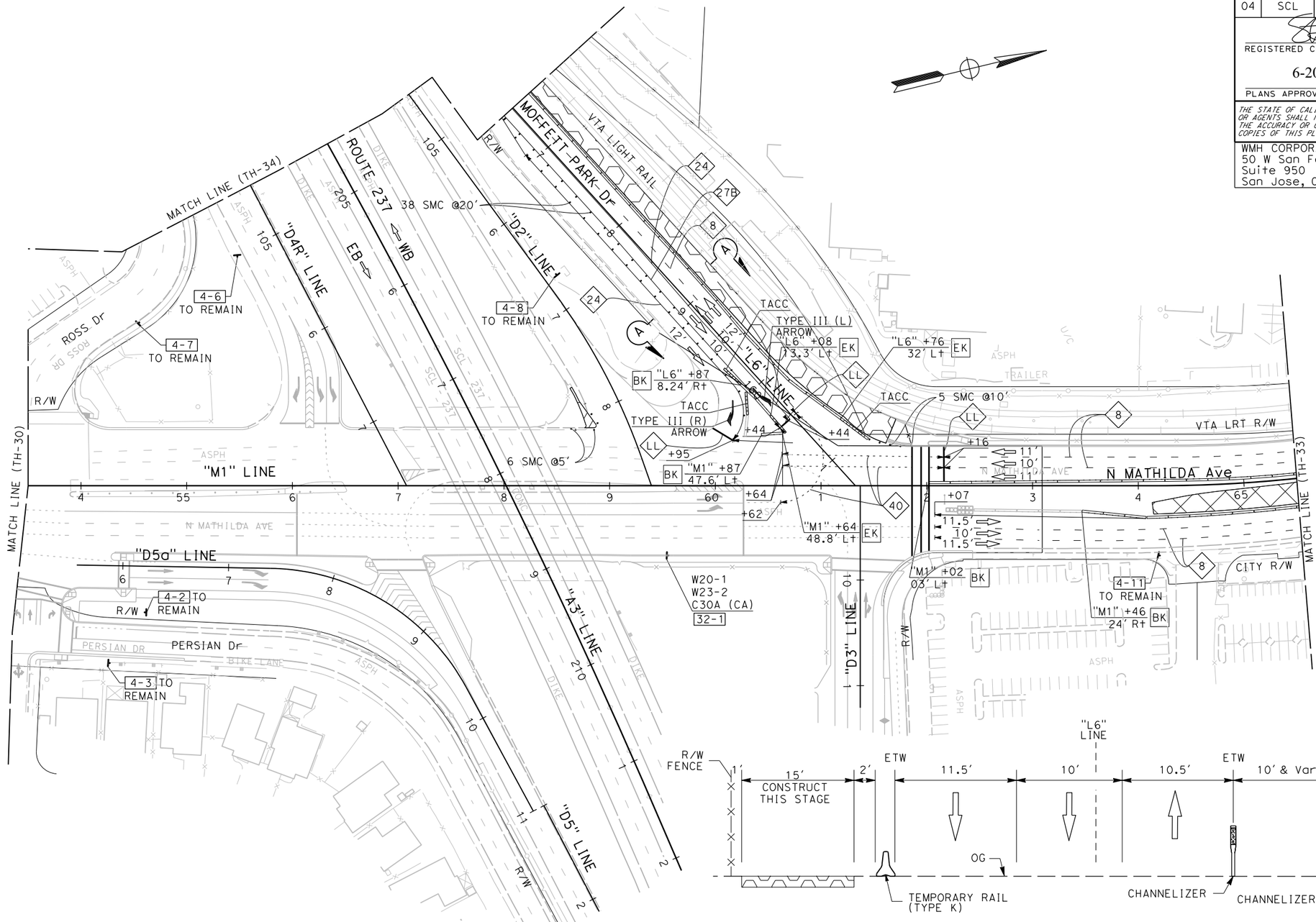

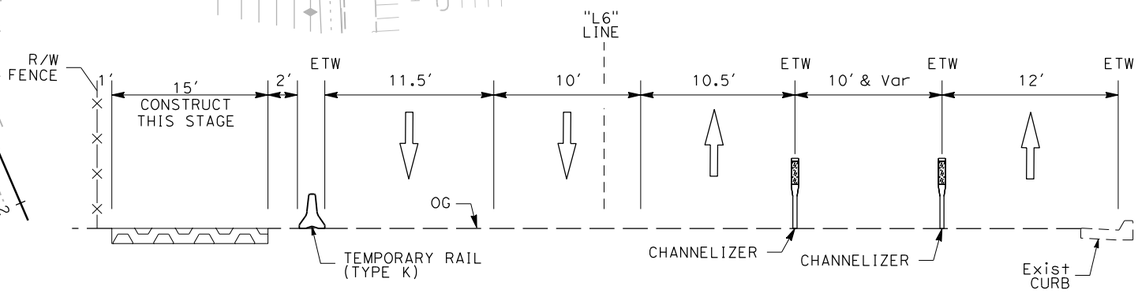

SECTION "A-A" - STAGE 2 - PHASE 2
MOFFETT PARK DRIVE

FOR NOTES AND LEGEND, SEE SHEET TH-1

THIS PLAN ACCURATE FOR TRAFFIC HANDLING WORK ONLY.

TRAFFIC HANDLING PLAN

STAGE 2 - PHASE 2
SCALE: 1" = 50'

TH-32

REVISED BY	DATE REVISED
SCV	01/5/18

CALCULATED-DESIGNED BY: CARLOS RODRIGUEZ
CHECKED BY: SHAWN VOGTMAN
CONSULTANT FUNCTIONAL SUPERVISOR: TIMOTHY J. LEE
STATE OF CALIFORNIA - DEPARTMENT OF TRANSPORTATION

LAST REVISION 01-15-18 — DATE PLOTTED => 6/20/2018 — TIME PLOTTED => 11:15:34 AM

X:\237_101_Mathilda\000_CAD\Sheets\MD-Traffic_Handling\MD-Plans\0413000204md032.dgn

BORDER LAST REVISED 7/2/2010 | USERNAME => Eilif | DGN FILE => 0413000204md032.dgn | RELATIVE BORDER SCALE IS IN INCHES 0 1 2 3 | UNIT 0000 | PROJECT NUMBER & PHASE 0413000204

Dist	COUNTY	ROUTE	POST MILES TOTAL PROJECT	SHEET No.	TOTAL SHEETS
04	SCL	101,237	45.2/45.8, 2.7/3.3	217	736

REGISTERED CIVIL ENGINEER — 6-13-18 DATE

PLANS APPROVAL DATE — 6-20-18

REGISTERED PROFESSIONAL ENGINEER — STEVE LOUPE — No. 63575 — Exp. 9/30/18 — CIVIL — STATE OF CALIFORNIA

THE STATE OF CALIFORNIA OR ITS OFFICERS OR AGENTS SHALL NOT BE RESPONSIBLE FOR THE ACCURACY OR COMPLETENESS OF SCANNED COPIES OF THIS PLAN SHEET.

WMH CORPORATION
50 W San Fernando St
Suite 950
San Jose, CA 95113

VTA
3331 N First St
Building B
San Jose, Ca 95134

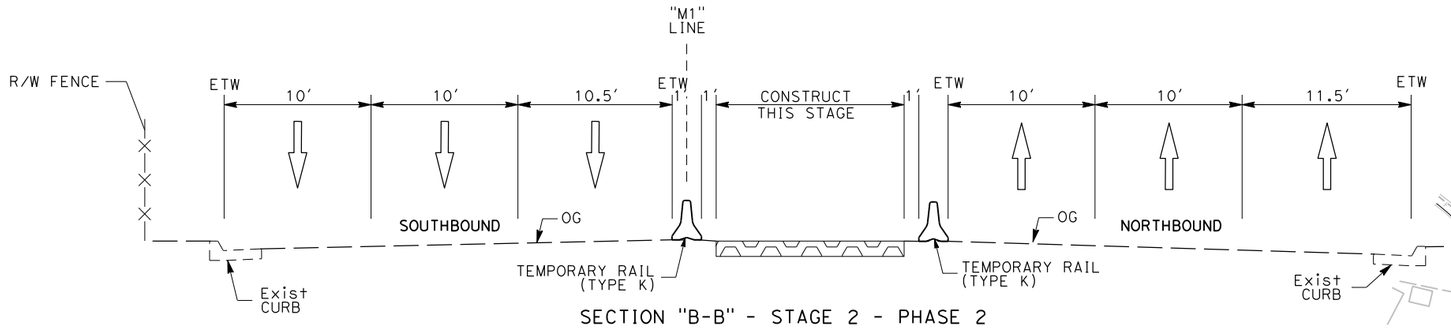

SECTION "B-B" - STAGE 2 - PHASE 2
MATHILDA AVENUE

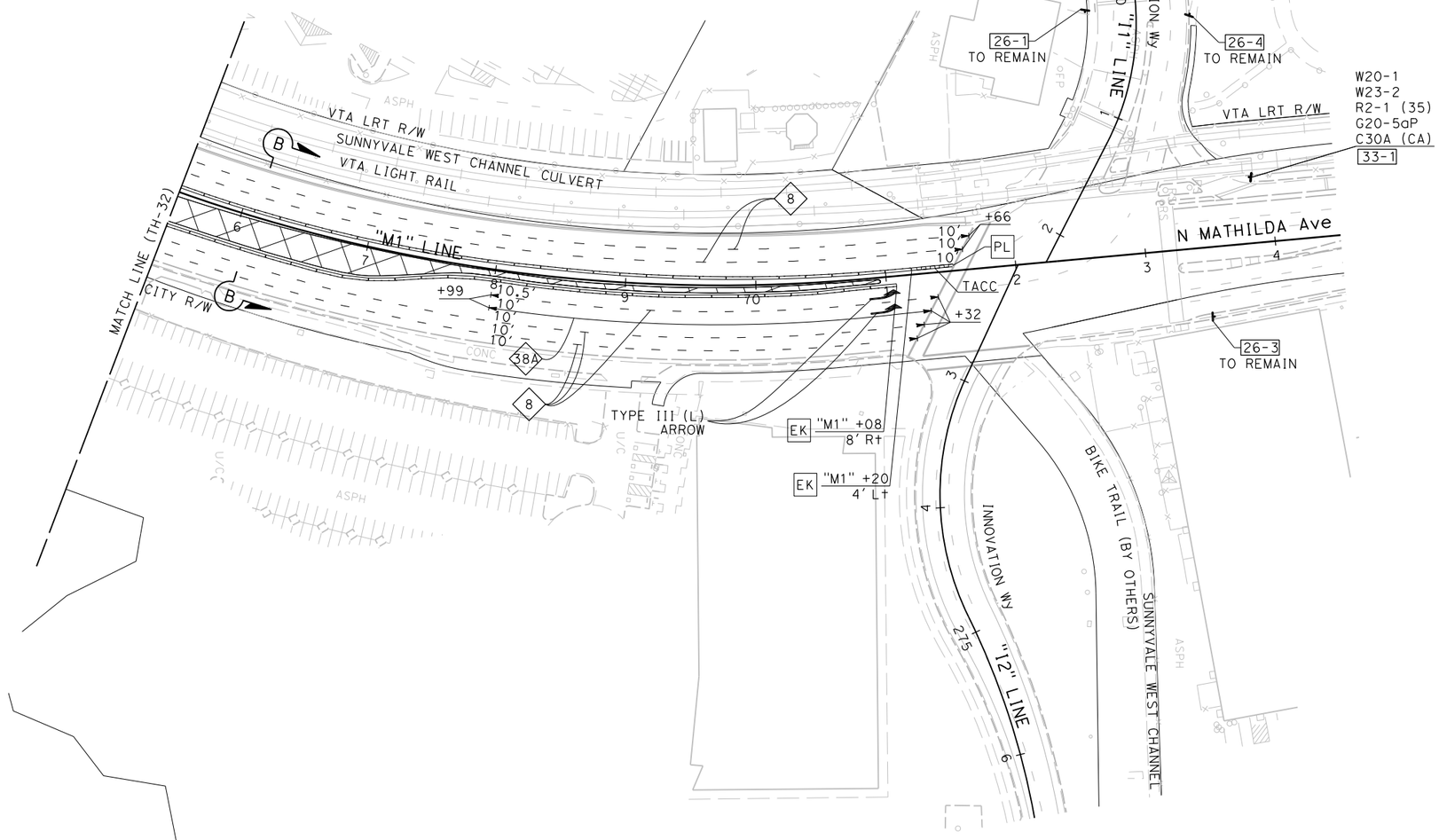

FOR NOTES AND LEGEND, SEE SHEET TH-1

THIS PLAN ACCURATE FOR TRAFFIC HANDLING WORK ONLY.

TRAFFIC HANDLING PLAN

STAGE 2 - PHASE 2
SCALE: 1" = 50′

TH-33

	REVISED BY	DATE REVISED
	SCV	01/5/18

CALCULATED-DESIGNED BY: CARLOS RODRIGUEZ
CHECKED BY: SHAWN VOGTMAN
CONSULTANT FUNCTIONAL SUPERVISOR: TIMOTHY J. LEE

STATE OF CALIFORNIA - DEPARTMENT OF TRANSPORTATION

LAST REVISION: DATE PLOTTED => 6/20/2018
01-15-18 TIME PLOTTED => 11:15:38 AM

X:\237_101_Mathilda\000_CAD\Sheets\MD-Traffic_Handling\MD-Plans\0413000204md033.dgn

BORDER LAST REVISED 7/2/2010 | USERNAME => Eilif | DGN FILE => 0413000204md033.dgn | RELATIVE BORDER SCALE IS IN INCHES 0 1 2 3 | UNIT 0000 | PROJECT NUMBER & PHASE 0413000204

Dist	COUNTY	ROUTE	POST MILES TOTAL PROJECT	SHEET No.	TOTAL SHEETS
04	SCL	101,237	45.2/45.8, 2.7/3.3	218	736

6-13-18
REGISTERED CIVIL ENGINEER — DATE

6-20-18
PLANS APPROVAL DATE

REGISTERED PROFESSIONAL ENGINEER — STEVE LOUPE — No. 63575 — Exp. 9/30/18 — CIVIL — STATE OF CALIFORNIA

THE STATE OF CALIFORNIA OR ITS OFFICERS OR AGENTS SHALL NOT BE RESPONSIBLE FOR THE ACCURACY OR COMPLETENESS OF SCANNED COPIES OF THIS PLAN SHEET.

WMH CORPORATION
50 W San Fernando St
Suite 950
San Jose, CA 95113

VTA
3331 N First St
Building B
San Jose, Ca 95134

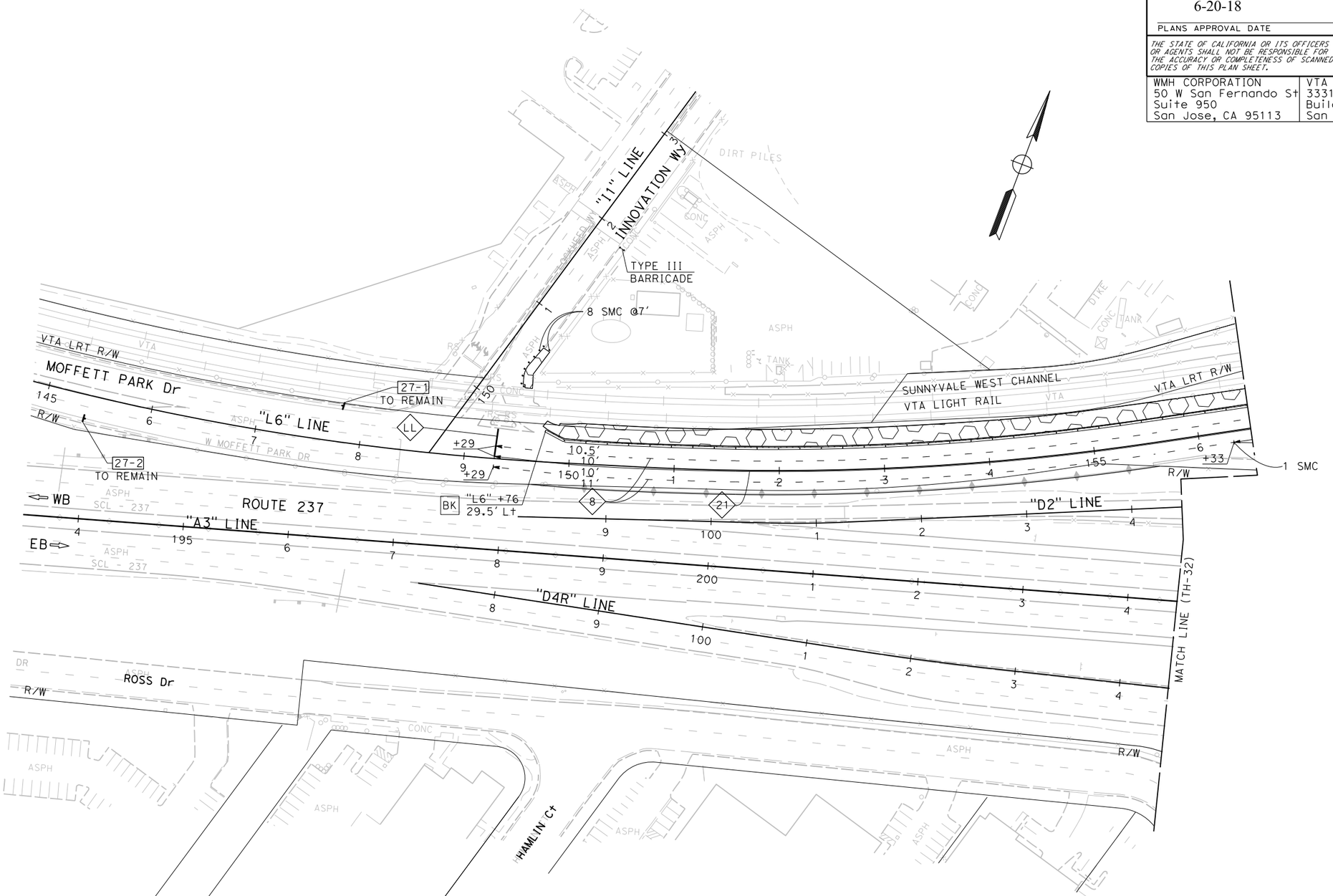

FOR NOTES AND LEGEND, SEE SHEET TH-1

THIS PLAN ACCURATE FOR TRAFFIC HANDLING WORK ONLY.

TRAFFIC HANDLING PLAN

STAGE 2 - PHASE 2

SCALE: 1" = 50'

TH-34

CALCULATED-DESIGNED BY	CARLOS RODRIGUEZ	REVISED BY	SCV
CHECKED BY	SHAWN VOGTMAN	DATE REVISED	01/5/18

STATE OF CALIFORNIA - DEPARTMENT OF TRANSPORTATION
Caltrans®

CONSULTANT FUNCTIONAL SUPERVISOR: TIMOTHY J. LEE

X:\237_101_Mathilda\000_CAD\Sheets\MD-Traffic_Handling\MD-Plans\0413000204md034.dgn

LAST REVISION — DATE PLOTTED => 6/20/2018 — TIME PLOTTED => 11:15:41 AM

BORDER LAST REVISED 7/2/2010 | USERNAME => Eilif | DGN FILE => 0413000204md034.dgn | RELATIVE BORDER SCALE IS IN INCHES 0 1 2 3 | UNIT 0000 | PROJECT NUMBER & PHASE 0413000204

Dist	COUNTY	ROUTE	POST MILES TOTAL PROJECT	SHEET No.	TOTAL SHEETS
04	SCL	101,237	45.2/45.8, 2.7/3.3	219	736

REGISTERED CIVIL ENGINEER — 6-13-18 DATE

6-20-18
PLANS APPROVAL DATE

STEVE LOUPE No. 63575 Exp. 9/30/18 CIVIL — REGISTERED PROFESSIONAL ENGINEER — STATE OF CALIFORNIA

THE STATE OF CALIFORNIA OR ITS OFFICERS OR AGENTS SHALL NOT BE RESPONSIBLE FOR THE ACCURACY OR COMPLETENESS OF SCANNED COPIES OF THIS PLAN SHEET.

WMH CORPORATION
50 W San Fernando St
Suite 950
San Jose, CA 95113

VTA
3331 N First St
Building B
San Jose, Ca 95134

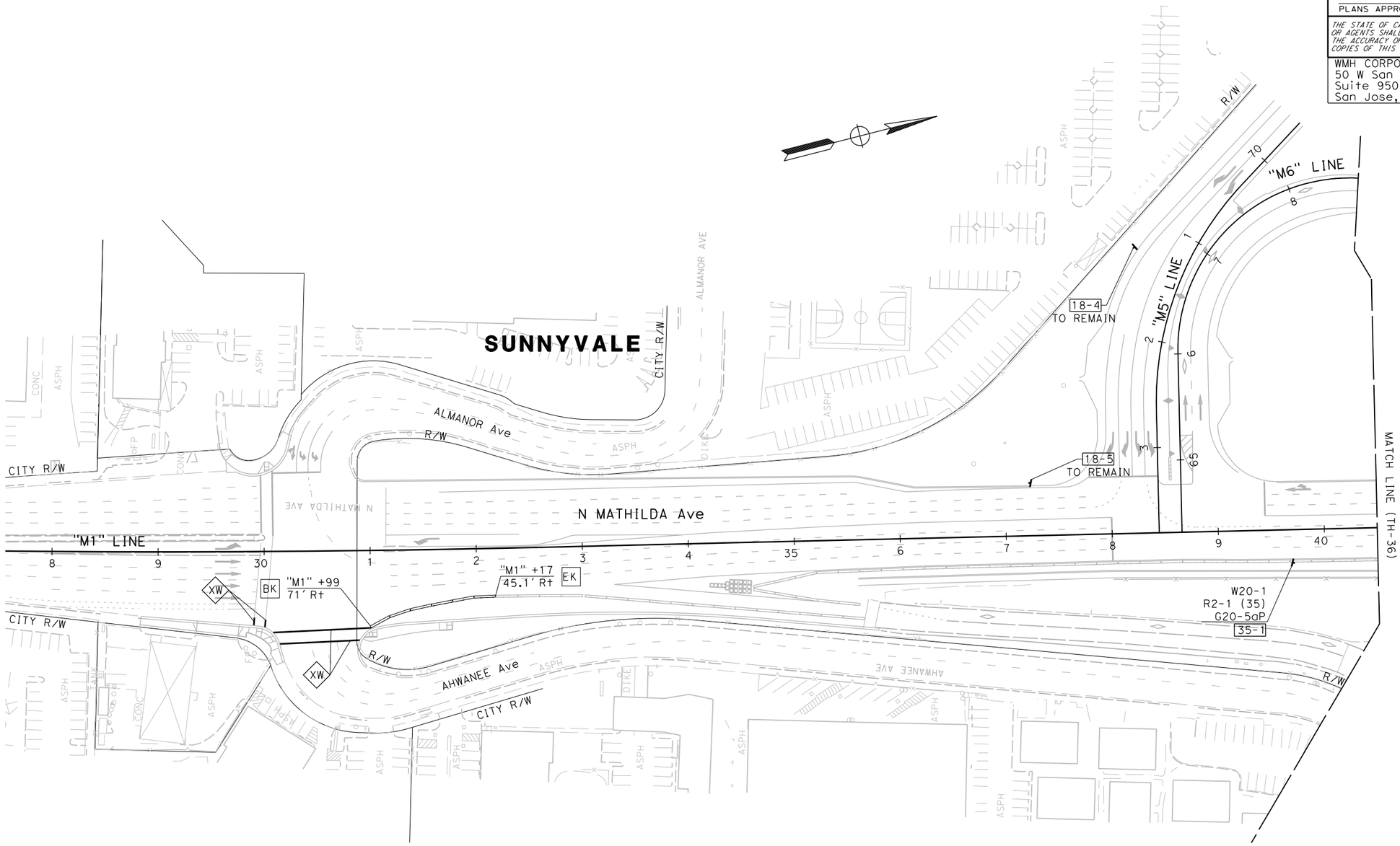

FOR NOTES AND LEGEND, SEE SHEET TH-1

THIS PLAN ACCURATE FOR TRAFFIC HANDLING WORK ONLY.

TRAFFIC HANDLING PLAN

STAGE 2 - PHASE 3

SCALE: 1" = 50'

TH-35

CALCULATED-DESIGNED BY	CARLOS RODRIGUEZ	REVISED BY	SCV
CHECKED BY	SHAWN VOGTMAN	DATE REVISED	01/5/18

TIMOTHY J. LEE
DISTRICT SUPERVISOR — CONSULTANT FUNCTIONAL SUPERVISOR

STATE OF CALIFORNIA - DEPARTMENT OF TRANSPORTATION
Caltrans

LAST REVISION 01-15-18
DATE PLOTTED => 6/20/2018
TIME PLOTTED => 11:15:44 AM

X:\237_101_Mathilde\000_CAD\Sheets\MD-Traffic_Handling\MD-Plans\0413000204md035.dgn

BORDER LAST REVISED 7/2/2010 | USERNAME => Eiiif | DGN FILE => 0413000204md035.dgn | RELATIVE BORDER SCALE IS IN INCHES 0 1 2 3 | UNIT 0000 | PROJECT NUMBER & PHASE 0413000204

Dist	COUNTY	ROUTE	POST MILES TOTAL PROJECT	SHEET No.	TOTAL SHEETS
04	SCL	101,237	45.2/45.8, 2.7/3.3	220	736

REGISTERED CIVIL ENGINEER — 6-13-18 DATE

STEVE LOUPE No. 63575 Exp. 9/30/18 CIVIL — REGISTERED PROFESSIONAL ENGINEER — STATE OF CALIFORNIA

6-20-18
PLANS APPROVAL DATE

THE STATE OF CALIFORNIA OR ITS OFFICERS OR AGENTS SHALL NOT BE RESPONSIBLE FOR THE ACCURACY OR COMPLETENESS OF SCANNED COPIES OF THIS PLAN SHEET.

WMH CORPORATION
50 W San Fernando St
Suite 950
San Jose, CA 95113

VTA
3331 N First St
Building B
San Jose, Ca 95134

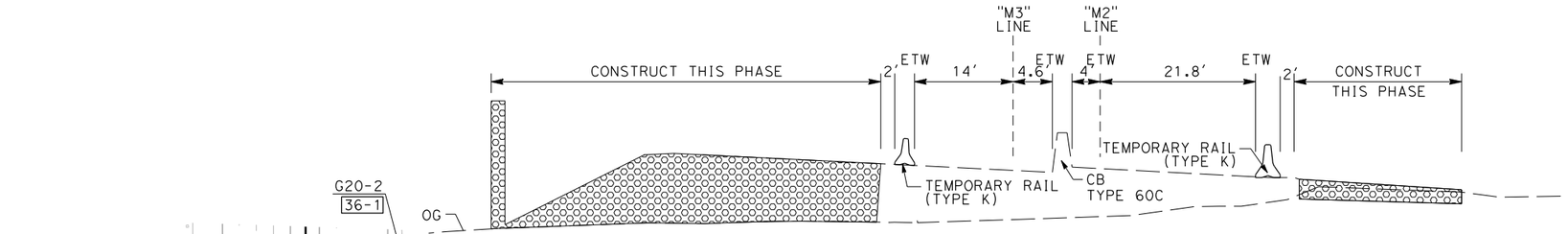

SECTION "A-A" - STAGE 2 - PHASE 3
101 NB ON/OFF-RAMP

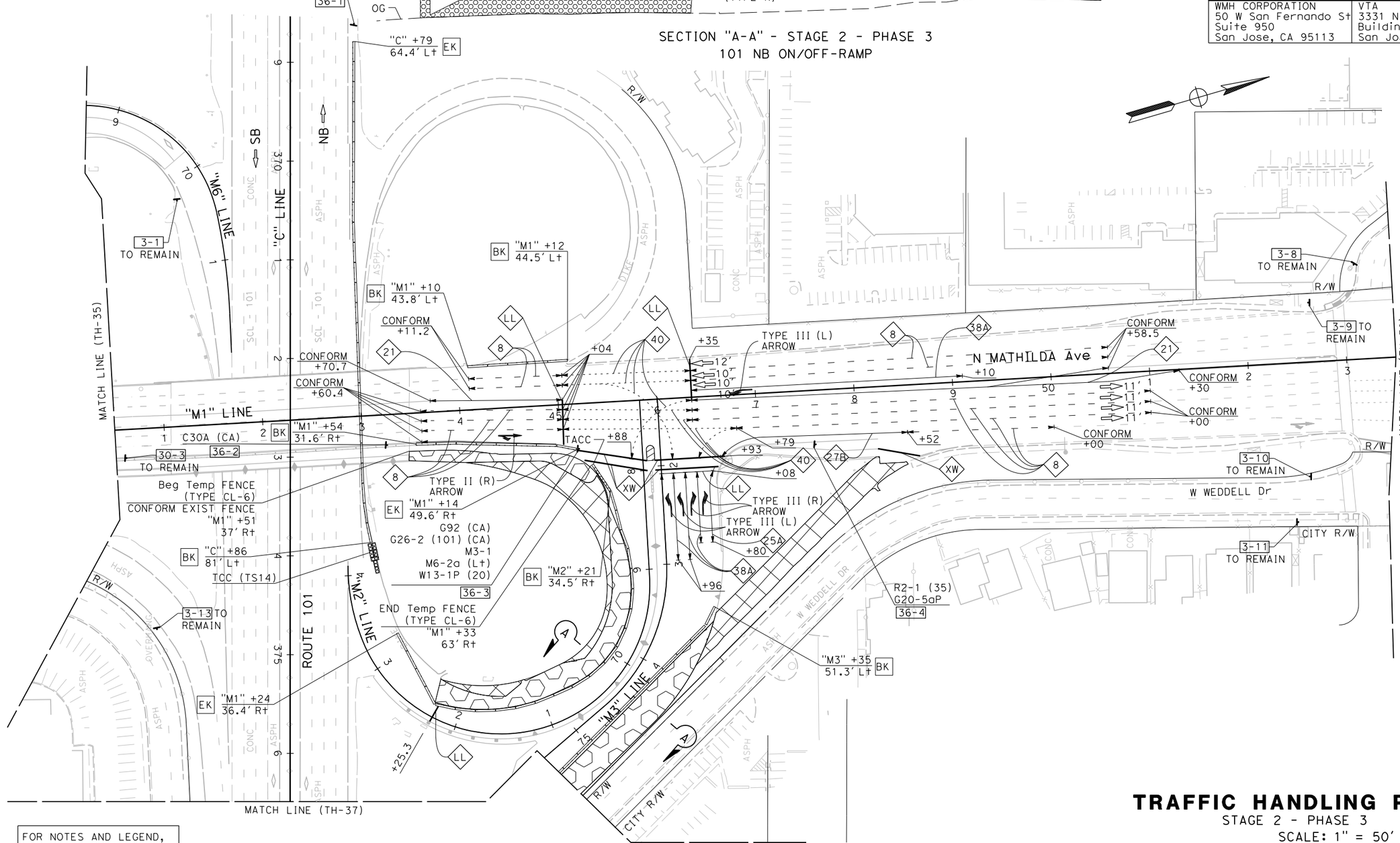

FOR NOTES AND LEGEND, SEE SHEET TH-1

THIS PLAN ACCURATE FOR TRAFFIC HANDLING WORK ONLY.

TRAFFIC HANDLING PLAN

STAGE 2 - PHASE 3
SCALE: 1" = 50'

TH-36

	CALCULATED-DESIGNED BY	CARLOS RODRIGUEZ	REVISED BY	SCV
	CHECKED BY	SHAWN VOGTMAN	DATE REVISED	01/5/18

CONSULTANT FUNCTIONAL SUPERVISOR: TIMOTHY J. LEE

STATE OF CALIFORNIA - DEPARTMENT OF TRANSPORTATION
Caltrans

LAST REVISION: DATE PLOTTED => 6/20/2018 TIME PLOTTED => 11:15:47 AM 01-15-18

X:\237_101_Mothilde\000_CAD\Sheets\MD-Traffic_Handling\MD-Plans\0413000204md036.dgn

BORDER LAST REVISED 7/2/2010 | USERNAME => Eilif DGN FILE => 0413000204md036.dgn | RELATIVE BORDER SCALE IS IN INCHES 0 1 2 3 | UNIT 0000 | PROJECT NUMBER & PHASE 0413000204

Dist	COUNTY	ROUTE	POST MILES TOTAL PROJECT	SHEET No.	TOTAL SHEETS
04	SCL	101,237	45.2/45.8, 2.7/3.3	221	736

REGISTERED CIVIL ENGINEER — DATE: 6-13-18

PLANS APPROVAL DATE: 6-20-18

REGISTERED PROFESSIONAL ENGINEER — STEVE LOUPE — No. 63575 — Exp. 9/30/18 — CIVIL — STATE OF CALIFORNIA

THE STATE OF CALIFORNIA OR ITS OFFICERS OR AGENTS SHALL NOT BE RESPONSIBLE FOR THE ACCURACY OR COMPLETENESS OF SCANNED COPIES OF THIS PLAN SHEET.

WMH CORPORATION
50 W San Fernando St
Suite 950
San Jose, CA 95113

VTA
3331 N First St
Building B
San Jose, Ca 95134

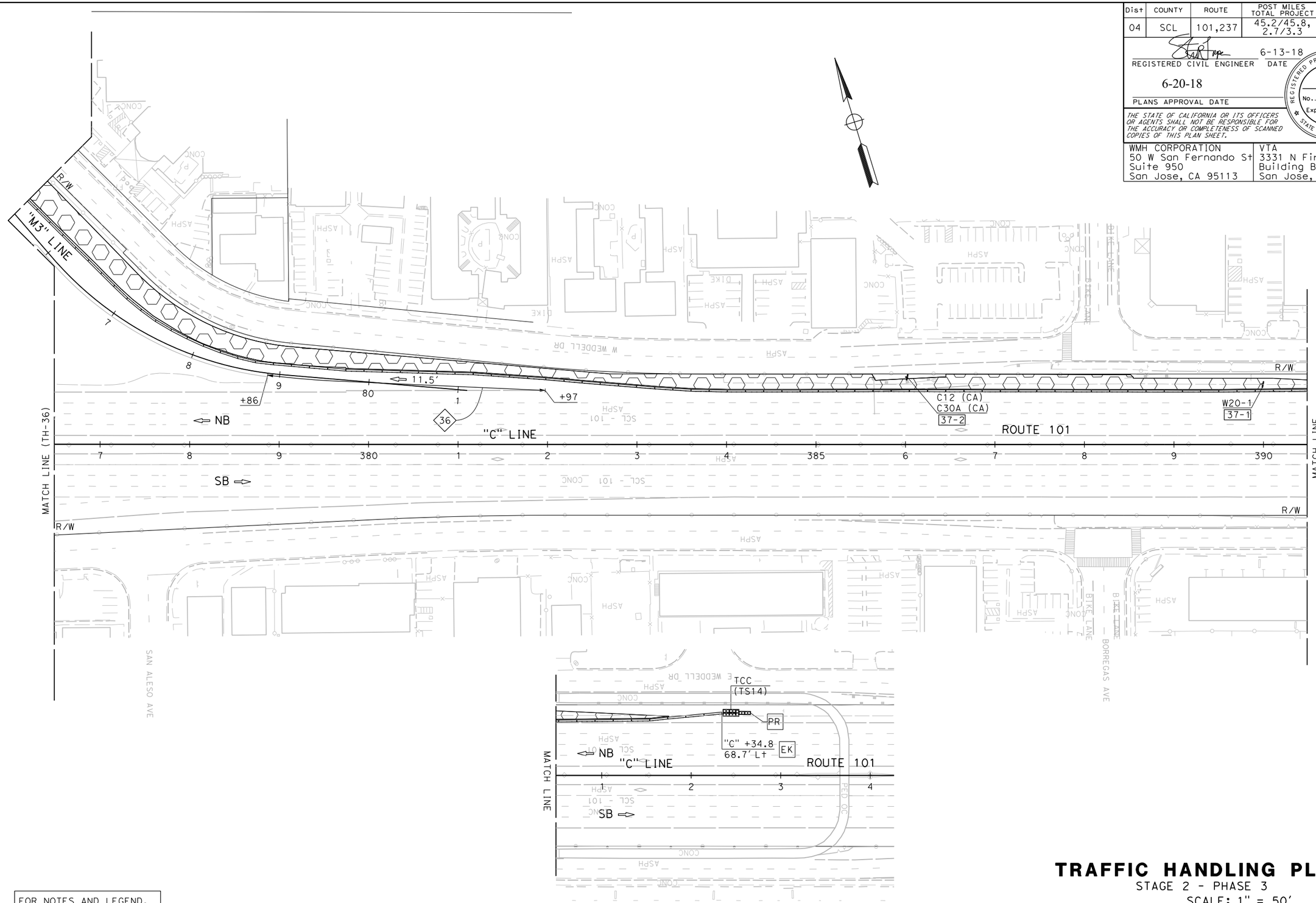

FOR NOTES AND LEGEND, SEE SHEET TH-1

THIS PLAN ACCURATE FOR TRAFFIC HANDLING WORK ONLY.

TRAFFIC HANDLING PLAN

STAGE 2 - PHASE 3

SCALE: 1" = 50'

TH-37

CALCULATED-DESIGNED BY	CARLOS RODRIGUEZ	
CHECKED BY	SHAWN VOGTMAN	
REVISED BY	SCV	
DATE REVISED	01/5/18	

CONSULTANT FUNCTIONAL SUPERVISOR: TIMOTHY J. LEE

STATE OF CALIFORNIA - DEPARTMENT OF TRANSPORTATION

Caltrans

LAST REVISION: DATE PLOTTED => 6/20/2018
01-15-18 TIME PLOTTED => 11:15:50 AM

X:\237_101_Mathilda\000_CAD\Sheets\MD-Traffic_Handling\MD-Plans\0413000204md037.dgn

BORDER LAST REVISED 7/2/2010 | USERNAME => Eilif | DGN FILE => 0413000204md037.dgn | RELATIVE BORDER SCALE IS IN INCHES 0 1 2 3 | UNIT 0000 | PROJECT NUMBER & PHASE 0413000204

Dist	COUNTY	ROUTE	POST MILES TOTAL PROJECT	SHEET No.	TOTAL SHEETS
04	SCL	101,237	45.2/45.8, 2.7/3.3	222	736

6-13-18
REGISTERED CIVIL ENGINEER DATE

6-20-18
PLANS APPROVAL DATE

REGISTERED PROFESSIONAL ENGINEER
STEVE LOUPE
No. 63575
Exp. 9/30/18
CIVIL
STATE OF CALIFORNIA

THE STATE OF CALIFORNIA OR ITS OFFICERS OR AGENTS SHALL NOT BE RESPONSIBLE FOR THE ACCURACY OR COMPLETENESS OF SCANNED COPIES OF THIS PLAN SHEET.

WMH CORPORATION
50 W San Fernando St
Suite 950
San Jose, CA 95113

VTA
3331 N First St
Building B
San Jose, Ca 95134

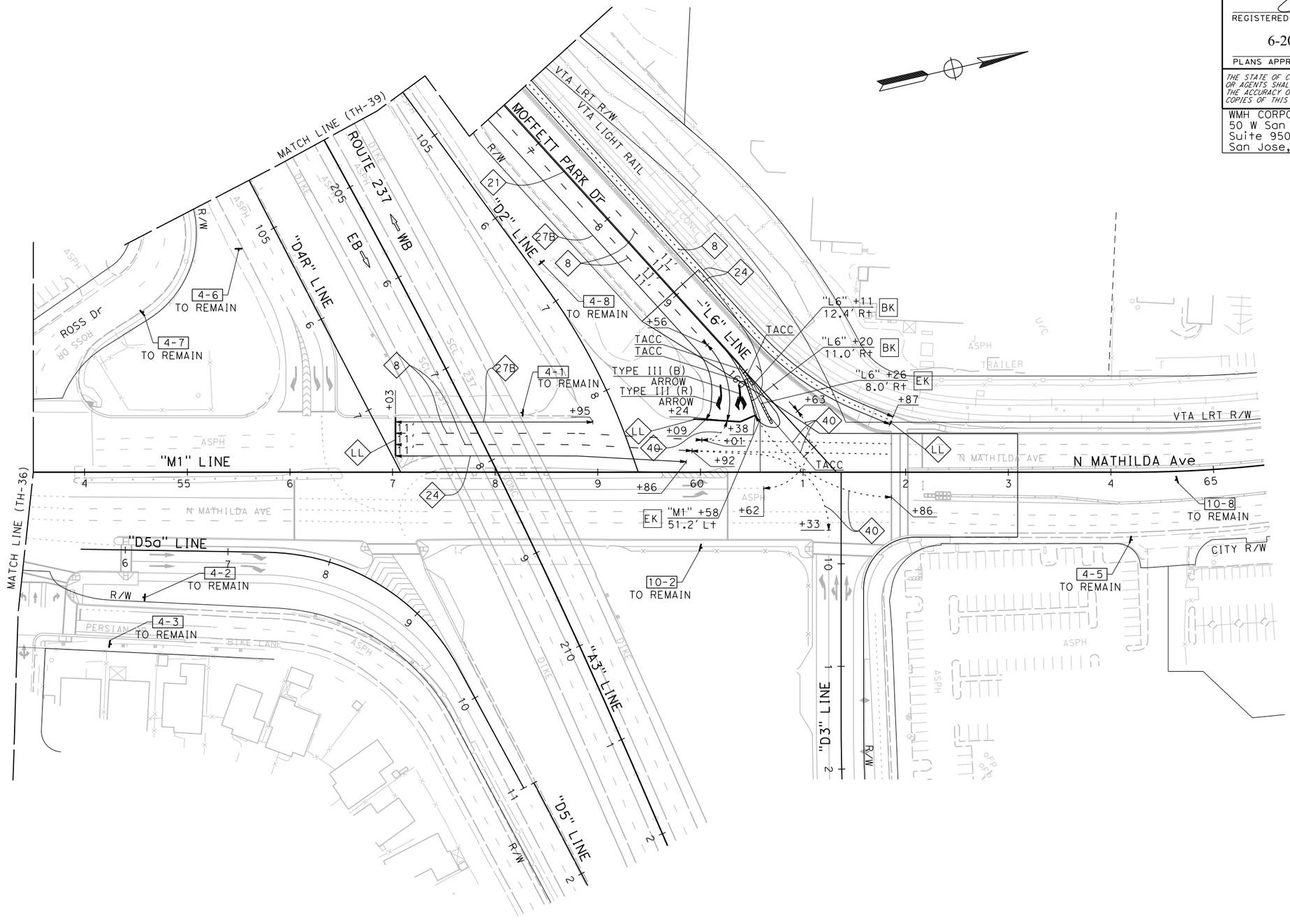

FOR NOTES AND LEGEND, SEE SHEET TH-1

THIS PLAN ACCURATE FOR TRAFFIC HANDLING WORK ONLY.

TRAFFIC HANDLING PLAN

STAGE 2 - PHASE 3
SCALE: 1" = 50'

TH-38

	REVISED BY	DATE REVISED
	SCV	01/5/18

CALCULATED-DESIGNED BY: CARLOS RODRIGUEZ
CHECKED BY: SHAWN VOGTMAN
CONSULTANT FUNCTIONAL SUPERVISOR: TIMOTHY J. LEE

STATE OF CALIFORNIA - DEPARTMENT OF TRANSPORTATION
Caltrans

LAST REVISION: DATE PLOTTED => 6/20/2018, TIME PLOTTED => 11:15:53 AM
01-15-18

X:\237_101_Mathilda\000_CAD\Sheets\MD-Traffic_Handling\MD-Plans\0413000204md038.dgn

BORDER LAST REVISED 7/2/2010 | USERNAME => Eilif | DGN FILE => 0413000204md038.dgn | RELATIVE BORDER SCALE IS IN INCHES 0 1 2 3 | UNIT 0000 | PROJECT NUMBER & PHASE 0413000204

Dist	COUNTY	ROUTE	POST MILES TOTAL PROJECT	SHEET No.	TOTAL SHEETS
04	SCL	101,237	45.2/45.8, 2.7/3.3	223	736

REGISTERED CIVIL ENGINEER — 6-13-18 DATE

6-20-18
PLANS APPROVAL DATE

REGISTERED PROFESSIONAL ENGINEER — STEVE LOUPE — No. 63575 — Exp. 9/30/18 — CIVIL — STATE OF CALIFORNIA

THE STATE OF CALIFORNIA OR ITS OFFICERS OR AGENTS SHALL NOT BE RESPONSIBLE FOR THE ACCURACY OR COMPLETENESS OF SCANNED COPIES OF THIS PLAN SHEET.

WMH CORPORATION 50 W San Fernando St Suite 950 San Jose, CA 95113	VTA 3331 N First St Building B San Jose, Ca 95134

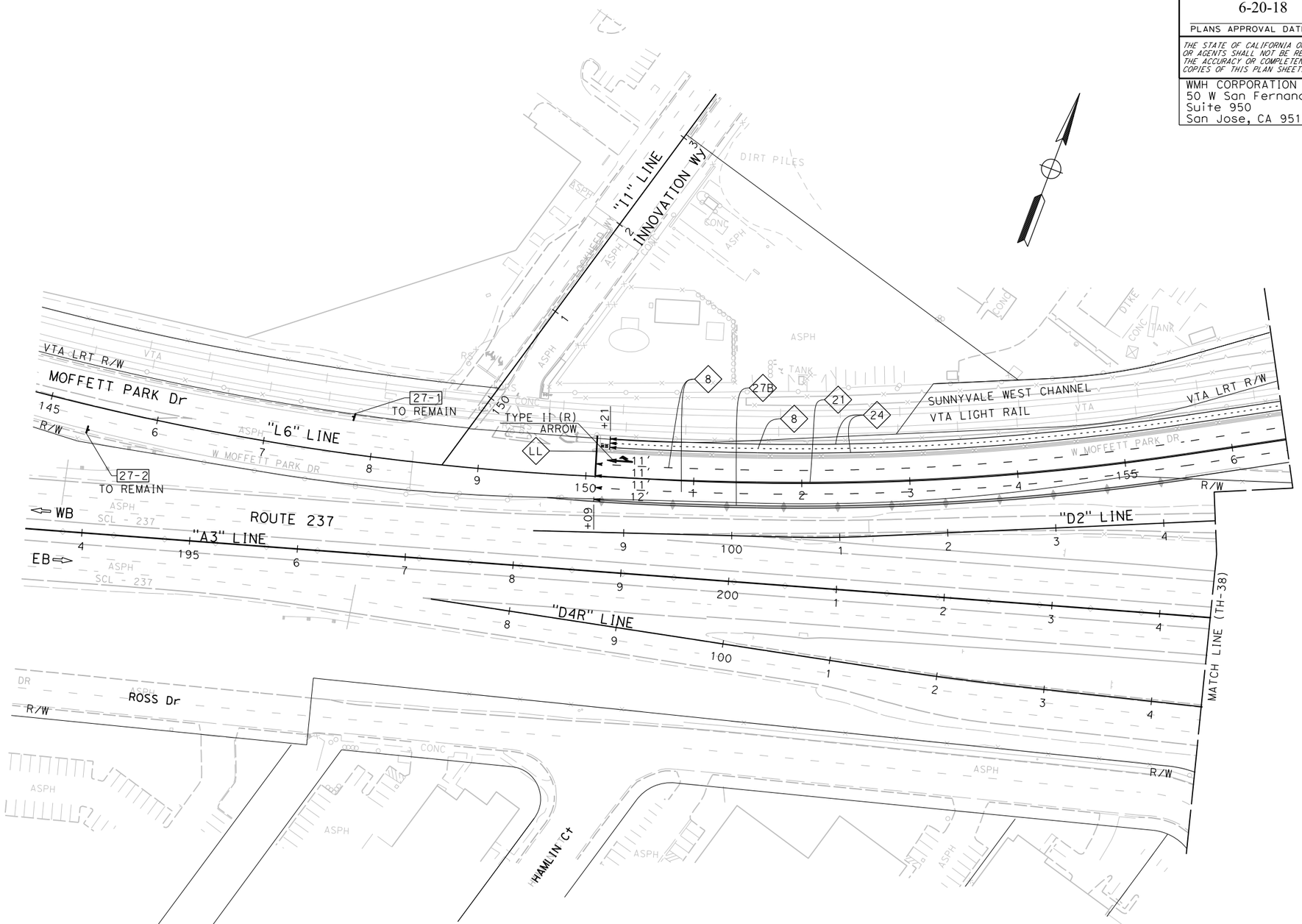

FOR NOTES AND LEGEND, SEE SHEET TH-1

THIS PLAN ACCURATE FOR TRAFFIC HANDLING WORK ONLY.

TRAFFIC HANDLING PLAN

STAGE 2 - PHASE 3

SCALE: 1" = 50'

TH-39

CALCULATED-DESIGNED BY	CARLOS RODRIGUEZ	
CHECKED BY	SHAWN VOGTMAN	
REVISED BY	SCV	
DATE REVISED	01/5/18	

STATE OF CALIFORNIA - DEPARTMENT OF TRANSPORTATION

Caltrans®

CONSULTANT FUNCTIONAL SUPERVISOR: TIMOTHY J. LEE

X:\237_101_Mathilda\000_CAD\Sheets\MD-Traffic_Handling\MD-Plans\0413000204md039.dgn

LAST REVISION: DATE PLOTTED => 6/20/2018; TIME PLOTTED => 11:15:55 AM

BORDER LAST REVISED 7/2/2010 | USERNAME => Eilif; DGN FILE => 0413000204md039.dgn | RELATIVE BORDER SCALE IS IN INCHES 0 1 2 3 | UNIT 0000 | PROJECT NUMBER & PHASE 0413000204

Dist	COUNTY	ROUTE	POST MILES TOTAL PROJECT	SHEET No.	TOTAL SHEETS
04	SCL	101,237	45.2/45.8, 2.7/3.3	224	736

REGISTERED CIVIL ENGINEER — 6-13-18 DATE

6-20-18
PLANS APPROVAL DATE

STEVE LOUPE No. 63575 Exp. 9/30/18 CIVIL — REGISTERED PROFESSIONAL ENGINEER — STATE OF CALIFORNIA

THE STATE OF CALIFORNIA OR ITS OFFICERS OR AGENTS SHALL NOT BE RESPONSIBLE FOR THE ACCURACY OR COMPLETENESS OF SCANNED COPIES OF THIS PLAN SHEET.

WMH CORPORATION
50 W San Fernando St
Suite 950
San Jose, CA 95113

VTA
3331 N First St
Building B
San Jose, Ca 95134

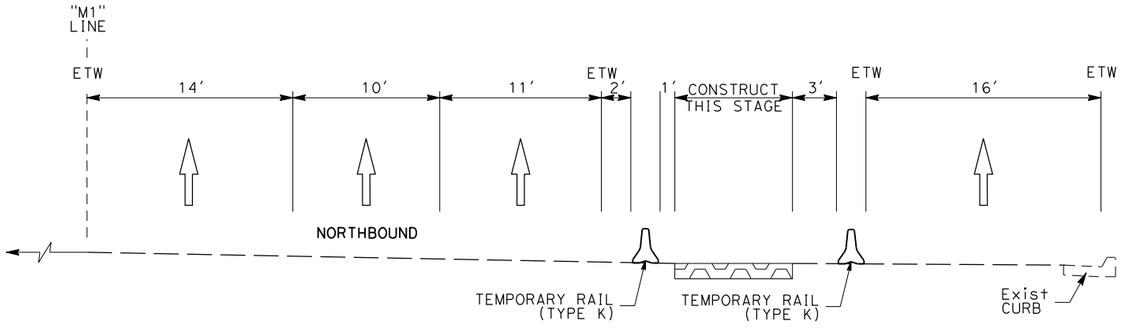

SECTION "A-A" - STAGE 2 - PHASE 4
MATHILDA AVENUE

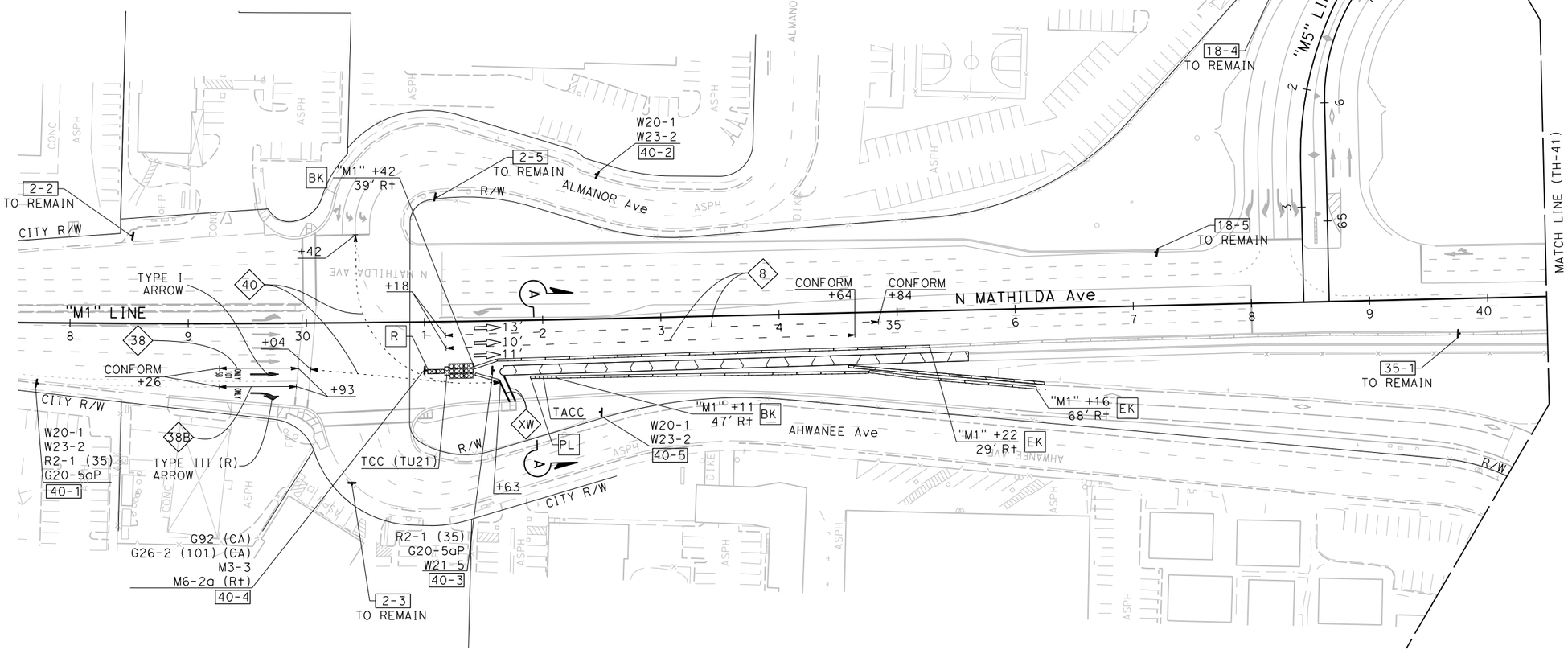

FOR NOTES AND LEGEND, SEE SHEET TH-1

THIS PLAN ACCURATE FOR TRAFFIC HANDLING WORK ONLY.

TRAFFIC HANDLING PLAN

STAGE 2 - PHASE 4
SCALE: 1" = 50'

TH-40

	REVISED BY	DATE REVISED
	SCV	01/5/18

CALCULATED-DESIGNED BY: CARLOS RODRIGUEZ
CHECKED BY: SHAWN VOGTMAN

TIMOTHY J. LEE
CONSULTANT FUNCTIONAL SUPERVISOR

STATE OF CALIFORNIA - DEPARTMENT OF TRANSPORTATION
Caltrans

LAST REVISION 01-15-18
DATE PLOTTED => 6/20/2018
TIME PLOTTED => 11:15:59 AM

X:\237_101_Mathilda\000_CAD\Sheets\MD-Traffic_Handling\MD-Plans\0413000204md040.dgn

BORDER LAST REVISED 7/2/2010 | USERNAME => Eilif | DGN FILE => 0413000204md040.dgn | RELATIVE BORDER SCALE IS IN INCHES 0 1 2 3 | UNIT 0000 | PROJECT NUMBER & PHASE 0413000204

Dist	COUNTY	ROUTE	POST MILES TOTAL PROJECT	SHEET No.	TOTAL SHEETS
04	SCL	101,237	45.2/45.8, 2.7/3.3	225	736

REGISTERED CIVIL ENGINEER — 6-13-18 DATE

6-20-18
PLANS APPROVAL DATE

STEVE LOUPE No. 63575 Exp. 9/30/18 CIVIL — REGISTERED PROFESSIONAL ENGINEER — STATE OF CALIFORNIA

THE STATE OF CALIFORNIA OR ITS OFFICERS OR AGENTS SHALL NOT BE RESPONSIBLE FOR THE ACCURACY OR COMPLETENESS OF SCANNED COPIES OF THIS PLAN SHEET.

WMH CORPORATION
50 W San Fernando St
Suite 950
San Jose, CA 95113

VTA
3331 N First St
Building B
San Jose, Ca 95134

REVISED BY	DATE REVISED
SCV	01/5/18

CALCULATED-DESIGNED BY: CARLOS RODRIGUEZ
CHECKED BY: SHAWN VOGTMAN
SUPERVISOR: TIMOTHY J. LEE
CONSULTANT FUNCTIONAL SUPERVISOR

STATE OF CALIFORNIA - DEPARTMENT OF TRANSPORTATION
Caltrans

SECTION "B-B" - STAGE 2 - PHASE 4
MATHILDA AVENUE

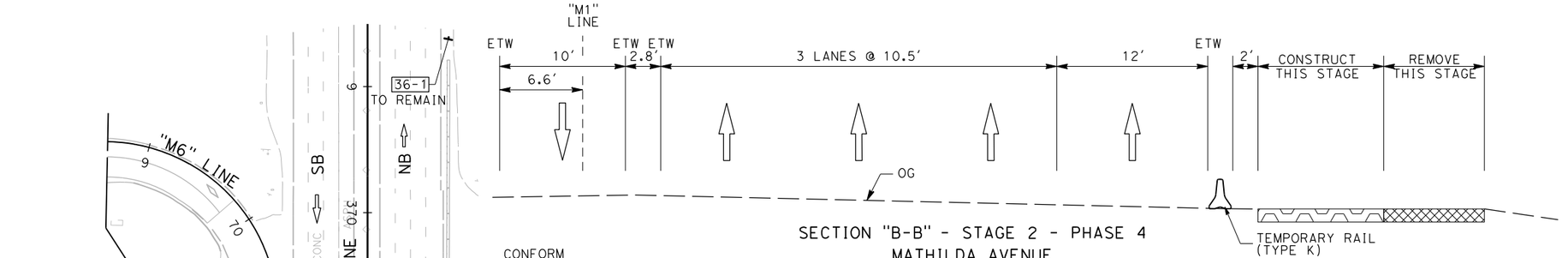

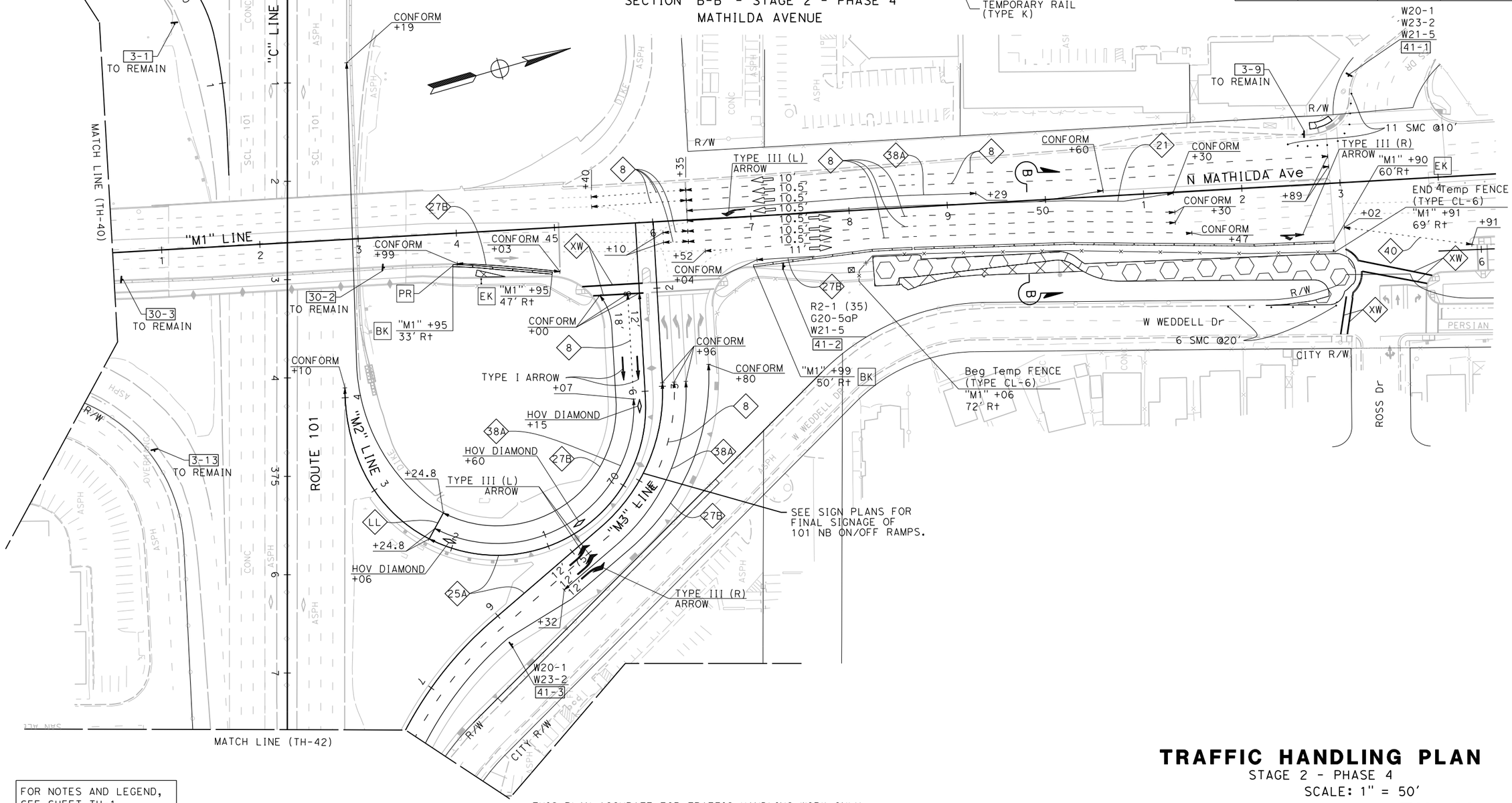

FOR NOTES AND LEGEND, SEE SHEET TH-1

THIS PLAN ACCURATE FOR TRAFFIC HANDLING WORK ONLY.

TRAFFIC HANDLING PLAN

STAGE 2 - PHASE 4
SCALE: 1" = 50′

TH-41

LAST REVISION: DATE PLOTTED => 6/20/2018
01-15-18 TIME PLOTTED => 11:16:02 AM

X:\237_101_Mathilda\000_CAD\Sheets\MD-Traffic_Handling\MD-Plans\0413000204md041.dgn

BORDER LAST REVISED 7/2/2010 | USERNAME => Eilif | DGN FILE => 0413000204md041.dgn | RELATIVE BORDER SCALE IS IN INCHES 0 1 2 3 | UNIT 0000 | PROJECT NUMBER & PHASE 0413000204

Dist	COUNTY	ROUTE	POST MILES TOTAL PROJECT	SHEET No.	TOTAL SHEETS
04	SCL	101,237	45.2/45.8, 2.7/3.3	226	736

REGISTERED CIVIL ENGINEER — DATE: 6-13-18

PLANS APPROVAL DATE: 6-20-18

STEVE LOUPE No. 63575 Exp. 9/30/18 CIVIL — REGISTERED PROFESSIONAL ENGINEER — STATE OF CALIFORNIA

THE STATE OF CALIFORNIA OR ITS OFFICERS OR AGENTS SHALL NOT BE RESPONSIBLE FOR THE ACCURACY OR COMPLETENESS OF SCANNED COPIES OF THIS PLAN SHEET.

WMH CORPORATION
50 W San Fernando St
Suite 950
San Jose, CA 95113

VTA
3331 N First St
Building B
San Jose, Ca 95134

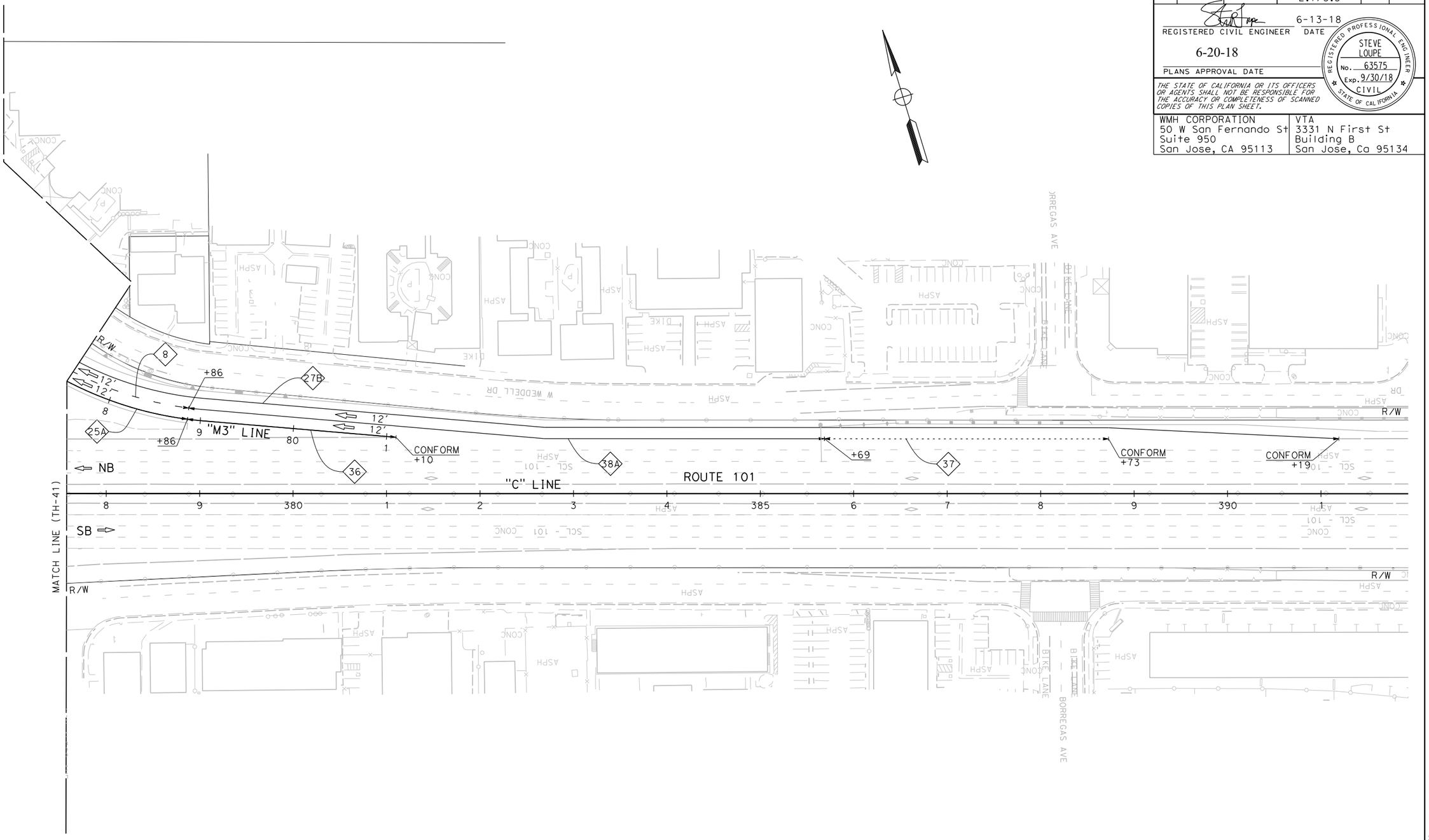

FOR NOTES AND LEGEND, SEE SHEET TH-1

THIS PLAN ACCURATE FOR TRAFFIC HANDLING WORK ONLY.

TRAFFIC HANDLING PLAN

STAGE 2 - PHASE 4

SCALE: 1" = 50'

TH-42

REVISED BY	DATE REVISED
SCV	01/5/18

CALCULATED-DESIGNED BY: CARLOS RODRIGUEZ
CHECKED BY: SHAWN VOGTMAN

DESIGN SUPERVISOR: TIMOTHY J. LEE
CONSULTANT FUNCTIONAL SUPERVISOR:

STATE OF CALIFORNIA - DEPARTMENT OF TRANSPORTATION
Caltrans

LAST REVISION 01-15-18
DATE PLOTTED => 6/20/2018
TIME PLOTTED => 11:16:05 AM

X:\237_101_Mathilda\000_CAD\Sheets\MD-Traffic_Handling\MD-Plans\0413000204md042.dgn

BORDER LAST REVISED 7/2/2010 | USERNAME => Eilif | DGN FILE => 0413000204md042.dgn | RELATIVE BORDER SCALE IS IN INCHES 0 1 2 3 | UNIT 0000 | PROJECT NUMBER & PHASE 0413000204

Dist	COUNTY	ROUTE	POST MILES TOTAL PROJECT	SHEET No.	TOTAL SHEETS
04	SCL	101,237	45.2/45.8, 2.7/3.3	227	736

REGISTERED CIVIL ENGINEER 6-13-18 DATE

6-20-18
PLANS APPROVAL DATE

REGISTERED PROFESSIONAL ENGINEER STEVE LOUPE No. 63575 Exp. 9/30/18 CIVIL STATE OF CALIFORNIA

THE STATE OF CALIFORNIA OR ITS OFFICERS OR AGENTS SHALL NOT BE RESPONSIBLE FOR THE ACCURACY OR COMPLETENESS OF SCANNED COPIES OF THIS PLAN SHEET.

WMH CORPORATION
50 W San Fernando St
Suite 950
San Jose, CA 95113

VTA
3331 N First St
Building B
San Jose, Ca 95134

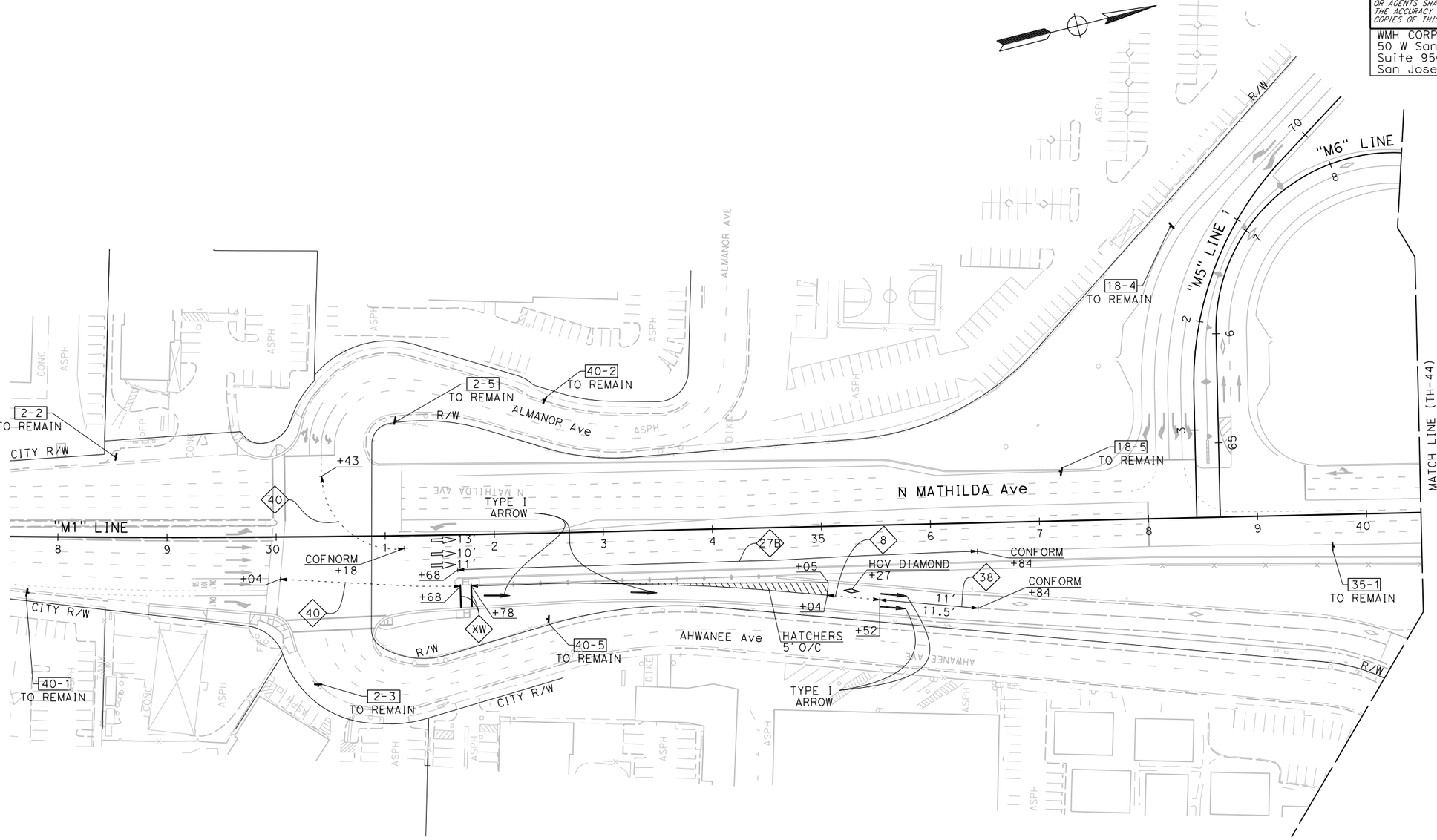

FOR NOTES AND LEGEND, SEE SHEET TH-1

THIS PLAN ACCURATE FOR TRAFFIC HANDLING WORK ONLY.

TRAFFIC HANDLING PLAN

STAGE 3 - PHASE 1

SCALE: 1" = 50'

TH- 43

STATE OF CALIFORNIA - DEPARTMENT OF TRANSPORTATION

Caltrans

CONSULTANT FUNCTIONAL SUPERVISOR: TIMOTHY J. LEE

CALCULATED-DESIGNED BY: CARLOS RODRIGUEZ

CHECKED BY: SHAWN VOGTMAN

REVISED BY: SCV

DATE REVISED: 01/5/18

X:\237_101_Mathilda\000_CAD\Sheets\MD-Traffic_Handling\MD-Plans\0413000204md043.dgn

LAST REVISION 01-15-18

DATE PLOTTED => 6/20/2018
TIME PLOTTED => 11:16:10 AM

Dist	COUNTY	ROUTE	POST MILES TOTAL PROJECT	SHEET No.	TOTAL SHEETS
04	SCL	101,237	45.2/45.8, 2.7/3.3	228	736

REGISTERED CIVIL ENGINEER — 6-13-18 DATE

6-20-18
PLANS APPROVAL DATE

STEVE LOUPE No. 63575 Exp. 9/30/18 CIVIL — REGISTERED PROFESSIONAL ENGINEER — STATE OF CALIFORNIA

THE STATE OF CALIFORNIA OR ITS OFFICERS OR AGENTS SHALL NOT BE RESPONSIBLE FOR THE ACCURACY OR COMPLETENESS OF SCANNED COPIES OF THIS PLAN SHEET.

WMH CORPORATION
50 W San Fernando St
Suite 950
San Jose, CA 95113

VTA
3331 N First St
Building B
San Jose, Ca 95134

REVISED BY	DATE REVISED
SCV	01/5/18

CALCULATED-DESIGNED BY: CARLOS RODRIGUEZ
CHECKED BY: SHAWN VOGTMAN

CONSULTANT FUNCTIONAL SUPERVISOR: TIMOTHY J. LEE

STATE OF CALIFORNIA - DEPARTMENT OF TRANSPORTATION
Caltrans

X:\237_101_Mathilda\000_CAD\Sheets\MD-Traffic_Handling\MD-Plans\0413000204md044.dgn

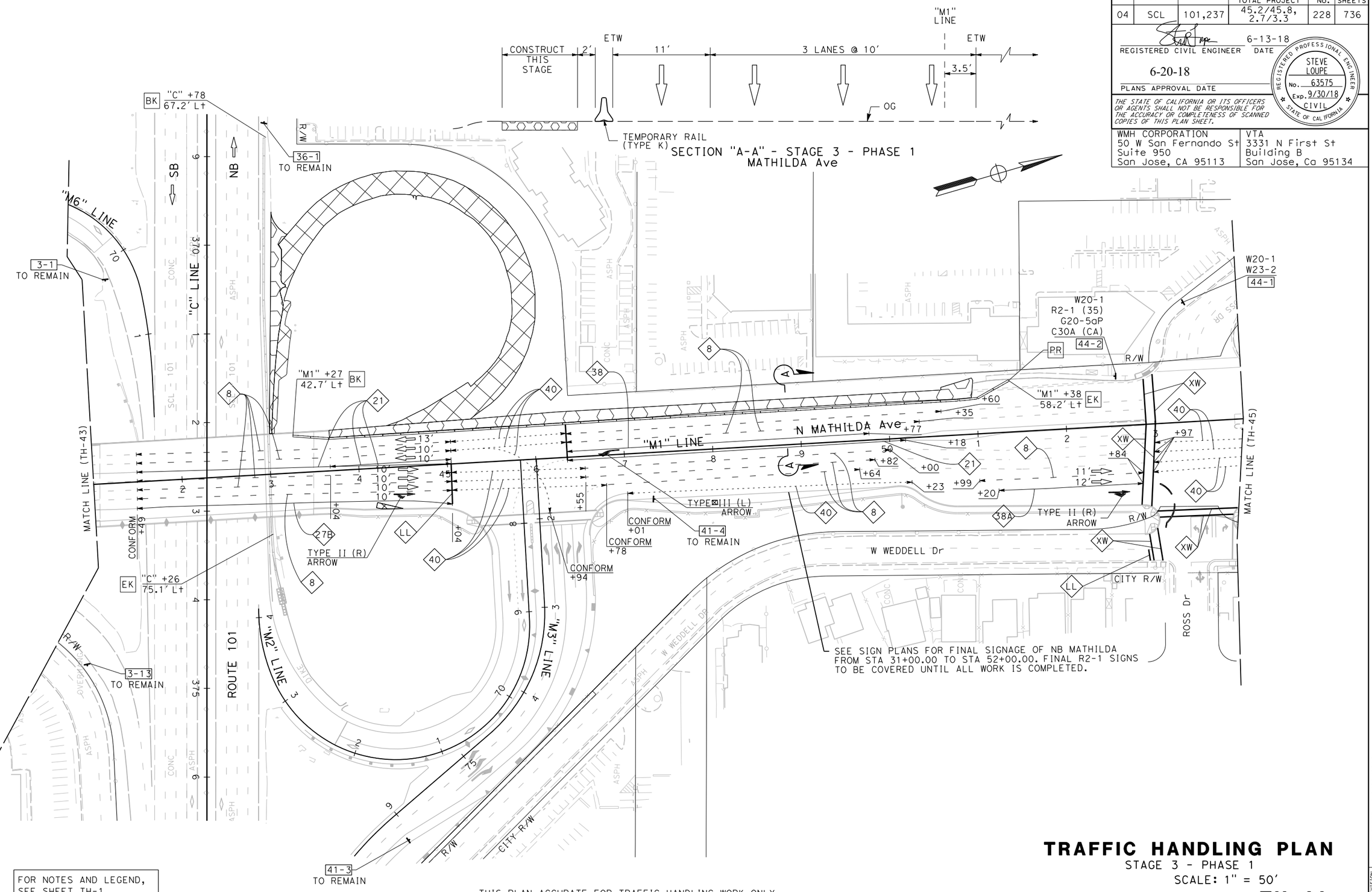

FOR NOTES AND LEGEND, SEE SHEET TH-1

THIS PLAN ACCURATE FOR TRAFFIC HANDLING WORK ONLY.

TRAFFIC HANDLING PLAN

STAGE 3 - PHASE 1
SCALE: 1" = 50'

TH-44

LAST REVISION: 01-15-18
DATE PLOTTED => 6/20/2018
TIME PLOTTED => 11:16:12 AM

BORDER LAST REVISED 7/2/2010 | USERNAME => Eilif | DGN FILE => 0413000204md044.dgn | RELATIVE BORDER SCALE IS IN INCHES 0 1 2 3 | UNIT 0000 | PROJECT NUMBER & PHASE 0413000204

Dist	COUNTY	ROUTE	POST MILES TOTAL PROJECT	SHEET No.	TOTAL SHEETS
04	SCL	101,237	45.2/45.8, 2.7/3.3	229	736

REGISTERED CIVIL ENGINEER 6-13-18 DATE

6-20-18
PLANS APPROVAL DATE

REGISTERED PROFESSIONAL ENGINEER STEVE LOUPE No. 63575 Exp. 9/30/18 CIVIL STATE OF CALIFORNIA

THE STATE OF CALIFORNIA OR ITS OFFICERS OR AGENTS SHALL NOT BE RESPONSIBLE FOR THE ACCURACY OR COMPLETENESS OF SCANNED COPIES OF THIS PLAN SHEET.

WMH CORPORATION
50 W San Fernando St
Suite 950
San Jose, CA 95113

VTA
3331 N First St
Building B
San Jose, Ca 95134

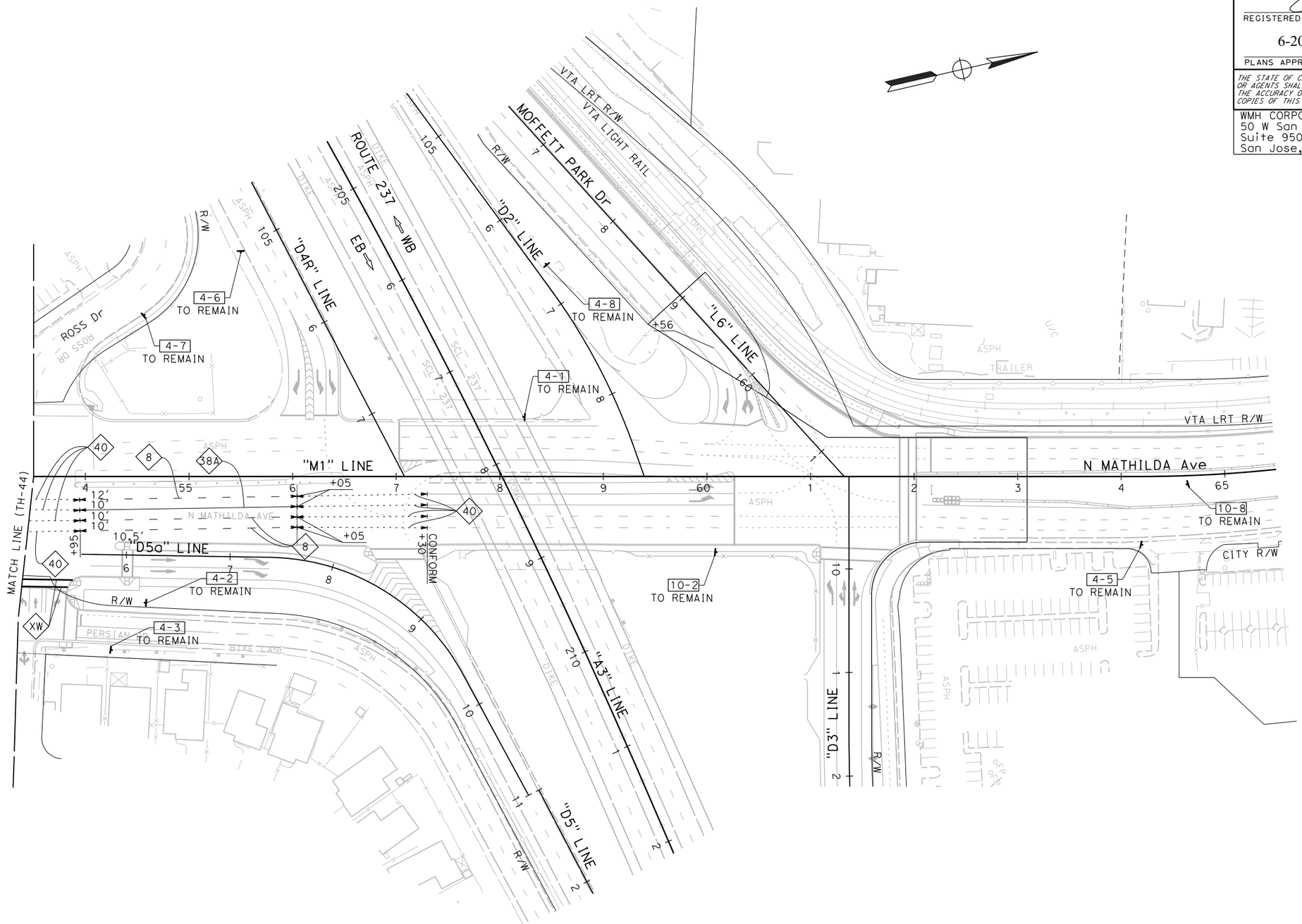

FOR NOTES AND LEGEND, SEE SHEET TH-1

THIS PLAN ACCURATE FOR TRAFFIC HANDLING WORK ONLY.

TRAFFIC HANDLING PLAN

STAGE 3 - PHASE 1

SCALE: 1" = 50'

TH-45

STATE OF CALIFORNIA - DEPARTMENT OF TRANSPORTATION

Caltrans

CALCULATED-DESIGNED BY: CARLOS RODRIGUEZ
CHECKED BY: SHAWN VOGTMAN
REVISED BY: SCV
DATE REVISED: 01/5/18
CONSULTANT FUNCTIONAL SUPERVISOR: TIMOTHY J. LEE

X:\237_101_Mathilda\000_CAD\Sheets\MD-Traffic_Handling\MD-Plans\0413000204md045.dgn

LAST REVISION 01-15-18
DATE PLOTTED => 6/20/2018
TIME PLOTTED => 11:16:16 AM

BORDER LAST REVISED 7/2/2010
USERNAME => Eilif
DGN FILE => 0413000204md045.dgn
RELATIVE BORDER SCALE IS IN INCHES 0 1 2 3
UNIT 0000
PROJECT NUMBER & PHASE 0413000204

Dist	COUNTY	ROUTE	POST MILES TOTAL PROJECT	SHEET No.	TOTAL SHEETS
04	SCL	101,237	45.2/45.8, 2.7/3.3	230	736

REGISTERED CIVIL ENGINEER — 6-13-18 DATE

6-20-18
PLANS APPROVAL DATE

STEVE LOUPE No. 63575 Exp. 9/30/18 CIVIL — REGISTERED PROFESSIONAL ENGINEER — STATE OF CALIFORNIA

THE STATE OF CALIFORNIA OR ITS OFFICERS OR AGENTS SHALL NOT BE RESPONSIBLE FOR THE ACCURACY OR COMPLETENESS OF SCANNED COPIES OF THIS PLAN SHEET.

WMH CORPORATION
50 W San Fernando St
Suite 950
San Jose, CA 95113

VTA
3331 N First St
Building B
San Jose, Ca 95134

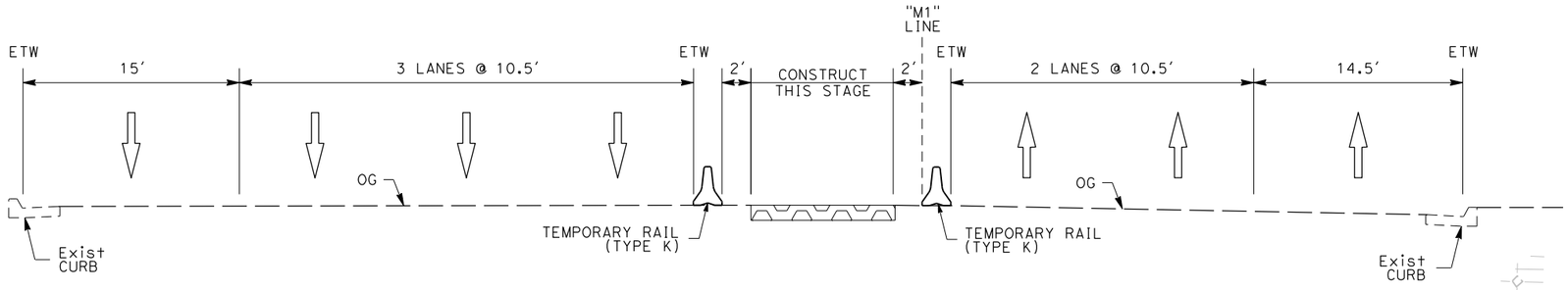

SECTION "A-A" - STAGE 3 PHASE 2
MATHILDA AVENUE

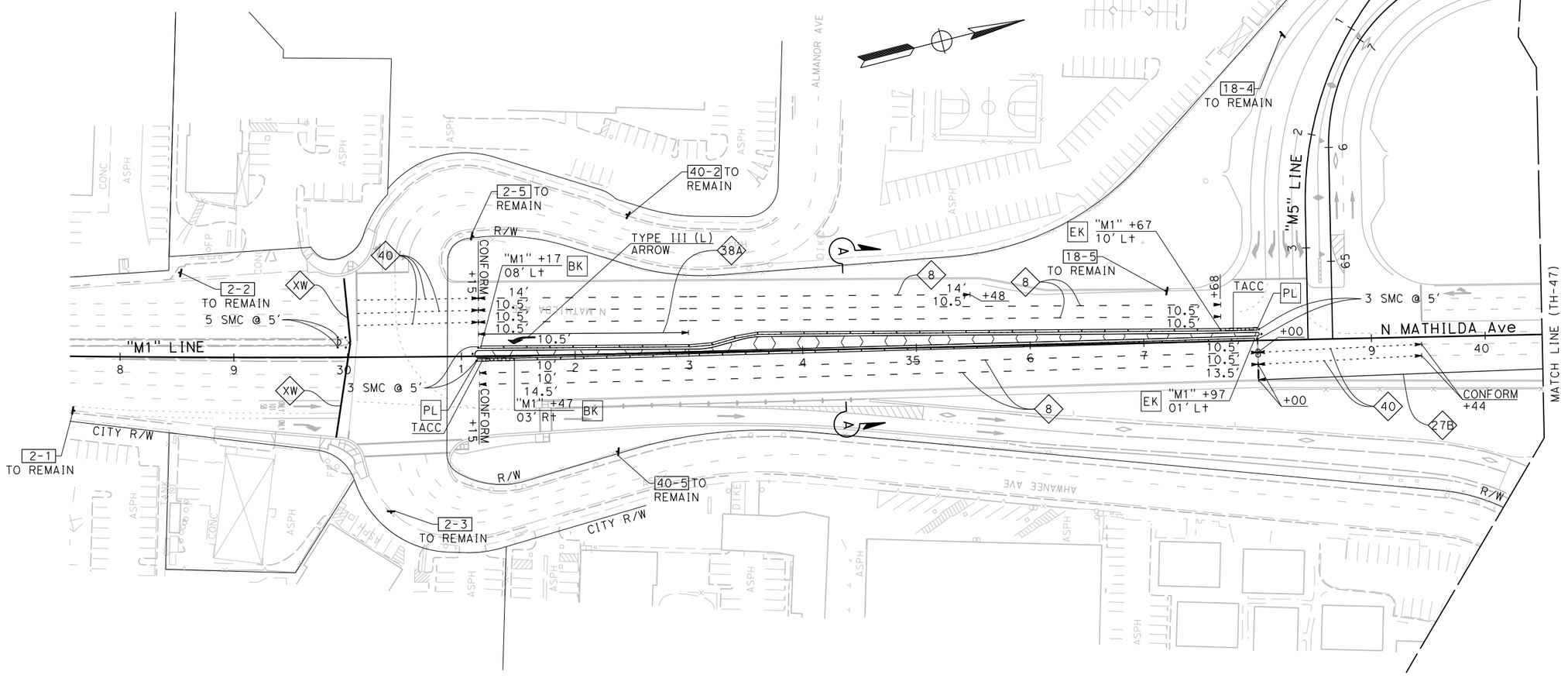

TRAFFIC HANDLING PLAN

STAGE 3 - PHASE 2
SCALE: 1" = 50′

TH-46

FOR NOTES AND LEGEND, SEE SHEET TH-1

THIS PLAN ACCURATE FOR TRAFFIC HANDLING WORK ONLY.

CALCULATED-DESIGNED BY	CHECKED BY	REVISED BY	DATE REVISED
CARLOS RODRIGUEZ	SHAWN VOGTMAN	SCV	01/5/18

STATE OF CALIFORNIA - DEPARTMENT OF TRANSPORTATION
CONSULTANT FUNCTIONAL SUPERVISOR: TIMOTHY J. LEE

LAST REVISION: DATE PLOTTED => 6/20/2018 TIME PLOTTED => 11:16:20 AM
01-15-18

X:\237_101_Mathilda\000_CAD\Sheets\MD-Traffic_Handling\MD-Plans\0413000204md046.dgn

BORDER LAST REVISED 7/2/2010 | USERNAME => Eilif | DGN FILE => 0413000204md046.dgn | RELATIVE BORDER SCALE IS IN INCHES 0 1 2 3 | UNIT 0000 | PROJECT NUMBER & PHASE 0413000204

Dist	COUNTY	ROUTE	POST MILES TOTAL PROJECT	SHEET No.	TOTAL SHEETS
04	SCL	101,237	45.2/45.8, 2.7/3.3	231	736

REGISTERED CIVIL ENGINEER — 6-13-18 DATE

6-20-18
PLANS APPROVAL DATE

REGISTERED PROFESSIONAL ENGINEER — STEVE LOUPE — No. 63575 — Exp. 9/30/18 — CIVIL — STATE OF CALIFORNIA

THE STATE OF CALIFORNIA OR ITS OFFICERS OR AGENTS SHALL NOT BE RESPONSIBLE FOR THE ACCURACY OR COMPLETENESS OF SCANNED COPIES OF THIS PLAN SHEET.

WMH CORPORATION
50 W San Fernando St
Suite 950
San Jose, CA 95113

VTA
3331 N First St
Building B
San Jose, Ca 95134

REVISED BY	DATE REVISED
SCV	01/5/18

CALCULATED-DESIGNED BY	CHECKED BY
CARLOS RODRIGUEZ	SHAWN VOGTMAN

SUPERVISOR: TIMOTHY J. LEE — CONSULTANT FUNCTIONAL SUPERVISOR

STATE OF CALIFORNIA - DEPARTMENT OF TRANSPORTATION — Caltrans®

X:\237_101_Mathilda\000_CAD\Sheets\MD-Traffic_Handling\MD-Plans\0413000204md047.dgn

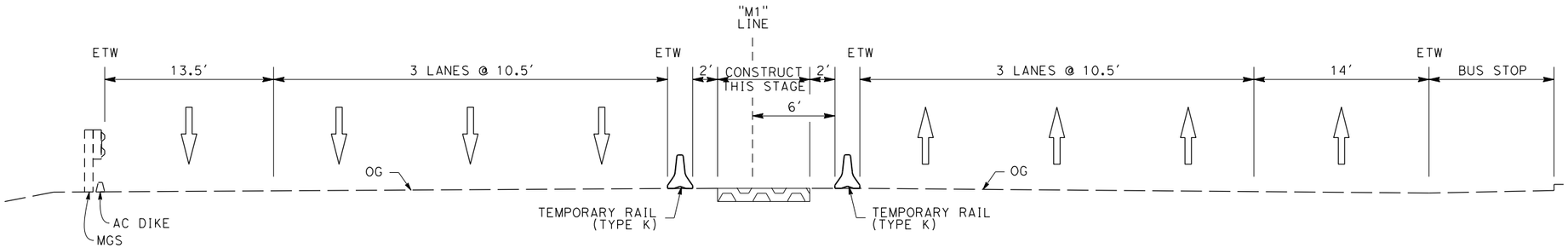

SECTION "B-B" - STAGE 3 PHASE 2
MATHILDA AVENUE

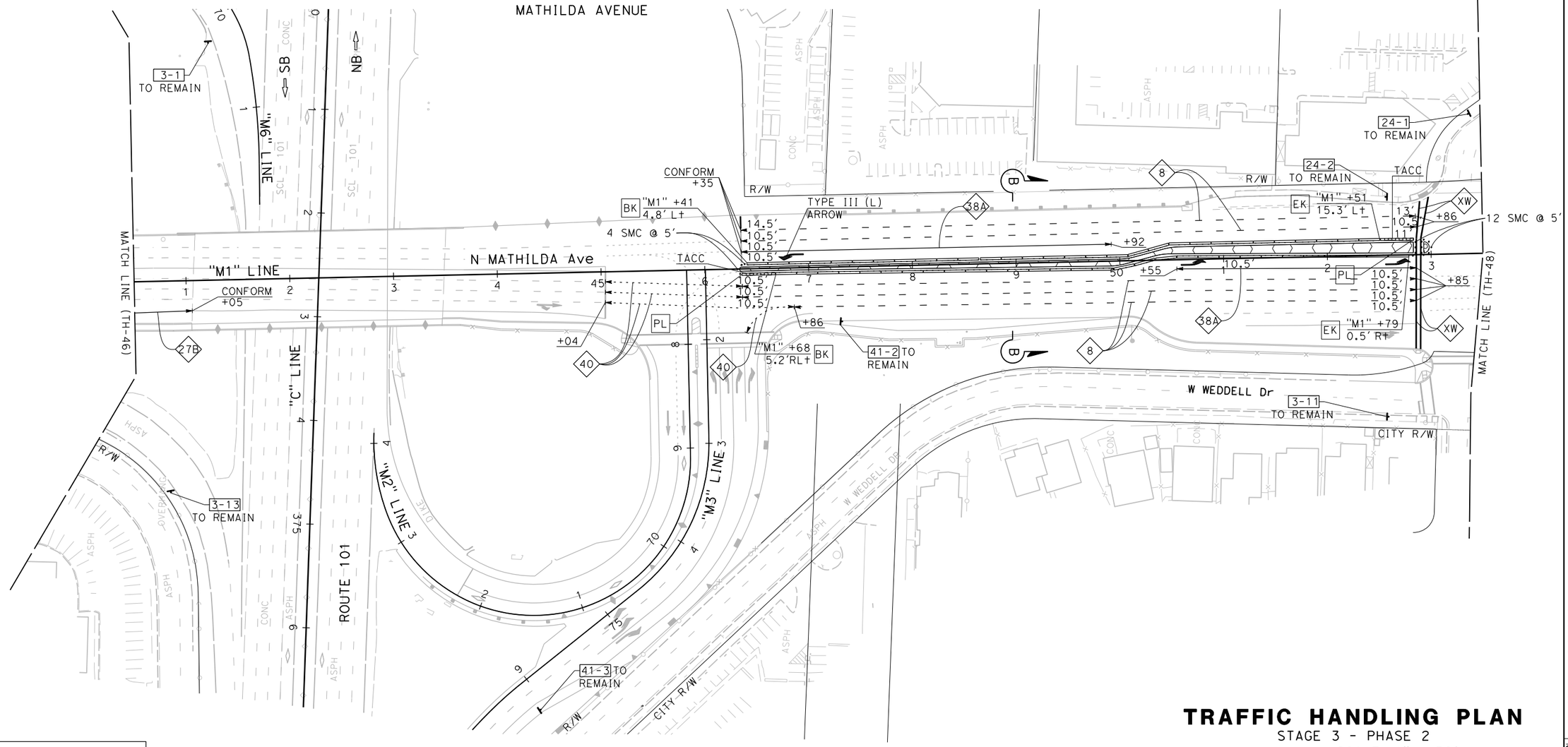

FOR NOTES AND LEGEND, SEE SHEET TH-1

THIS PLAN ACCURATE FOR TRAFFIC HANDLING WORK ONLY.

TRAFFIC HANDLING PLAN

STAGE 3 - PHASE 2
SCALE: 1" = 50′

TH- 47

LAST REVISION — DATE PLOTTED => 6/20/2018 — TIME PLOTTED => 11:16:23 AM
01-15-18

Dist	COUNTY	ROUTE	POST MILES TOTAL PROJECT	SHEET No.	TOTAL SHEETS
04	SCL	101,237	45.2/45.8, 2.7/3.3	232	736

REGISTERED CIVIL ENGINEER 6-13-18 DATE

6-20-18
PLANS APPROVAL DATE

REGISTERED PROFESSIONAL ENGINEER STEVE LOUPE No. 63575 Exp. 9/30/18 CIVIL STATE OF CALIFORNIA

THE STATE OF CALIFORNIA OR ITS OFFICERS OR AGENTS SHALL NOT BE RESPONSIBLE FOR THE ACCURACY OR COMPLETENESS OF SCANNED COPIES OF THIS PLAN SHEET.

WMH CORPORATION
50 W San Fernando St
Suite 950
San Jose, CA 95113

VTA
3331 N First St
Building B
San Jose, Ca 95134

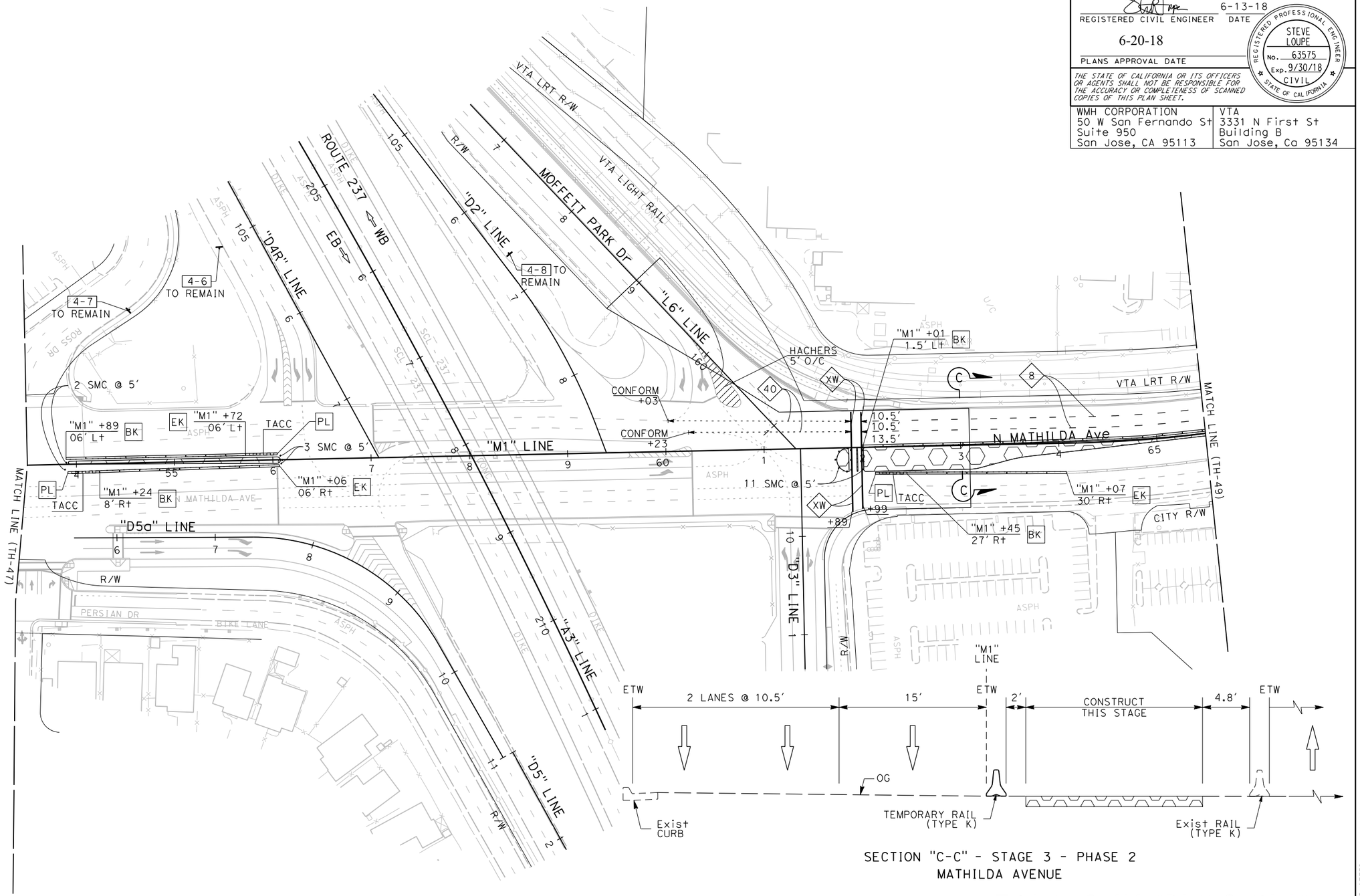

SECTION "C-C" - STAGE 3 - PHASE 2
MATHILDA AVENUE

TRAFFIC HANDLING PLAN

STAGE 3 - PAHSE 2
SCALE: 1" = 50'

TH- 48

FOR NOTES AND LEGEND, SEE SHEET TH-1

THIS PLAN ACCURATE FOR TRAFFIC HANDLING WORK ONLY.

STATE OF CALIFORNIA - DEPARTMENT OF TRANSPORTATION
Caltrans

CONSULTANT FUNCTIONAL SUPERVISOR: TIMOTHY J. LEE
CALCULATED-DESIGNED BY: CARLOS RODRIGUEZ
CHECKED BY: SHAWN VOGTMAN
REVISED BY: SCV
DATE REVISED: 01/5/18

X:\237_101_Mathilda\000_CAD\Sheets\MD-Traffic_Handling\MD-Plans\0413000204md048.dgn

LAST REVISION 01-15-18
DATE PLOTTED => 6/20/2018
TIME PLOTTED => 11:16:26 AM

Dist	COUNTY	ROUTE	POST MILES TOTAL PROJECT	SHEET No.	TOTAL SHEETS
04	SCL	101,237	45.2/45.8, 2.7/3.3	233	736

REGISTERED CIVIL ENGINEER — 6-13-18 DATE

6-20-18
PLANS APPROVAL DATE

STEVE LOUPE No. 63575 Exp. 9/30/18 CIVIL — REGISTERED PROFESSIONAL ENGINEER — STATE OF CALIFORNIA

THE STATE OF CALIFORNIA OR ITS OFFICERS OR AGENTS SHALL NOT BE RESPONSIBLE FOR THE ACCURACY OR COMPLETENESS OF SCANNED COPIES OF THIS PLAN SHEET.

WMH CORPORATION 50 W San Fernando St Suite 950 San Jose, CA 95113	VTA 3331 N First St Building B San Jose, Ca 95134

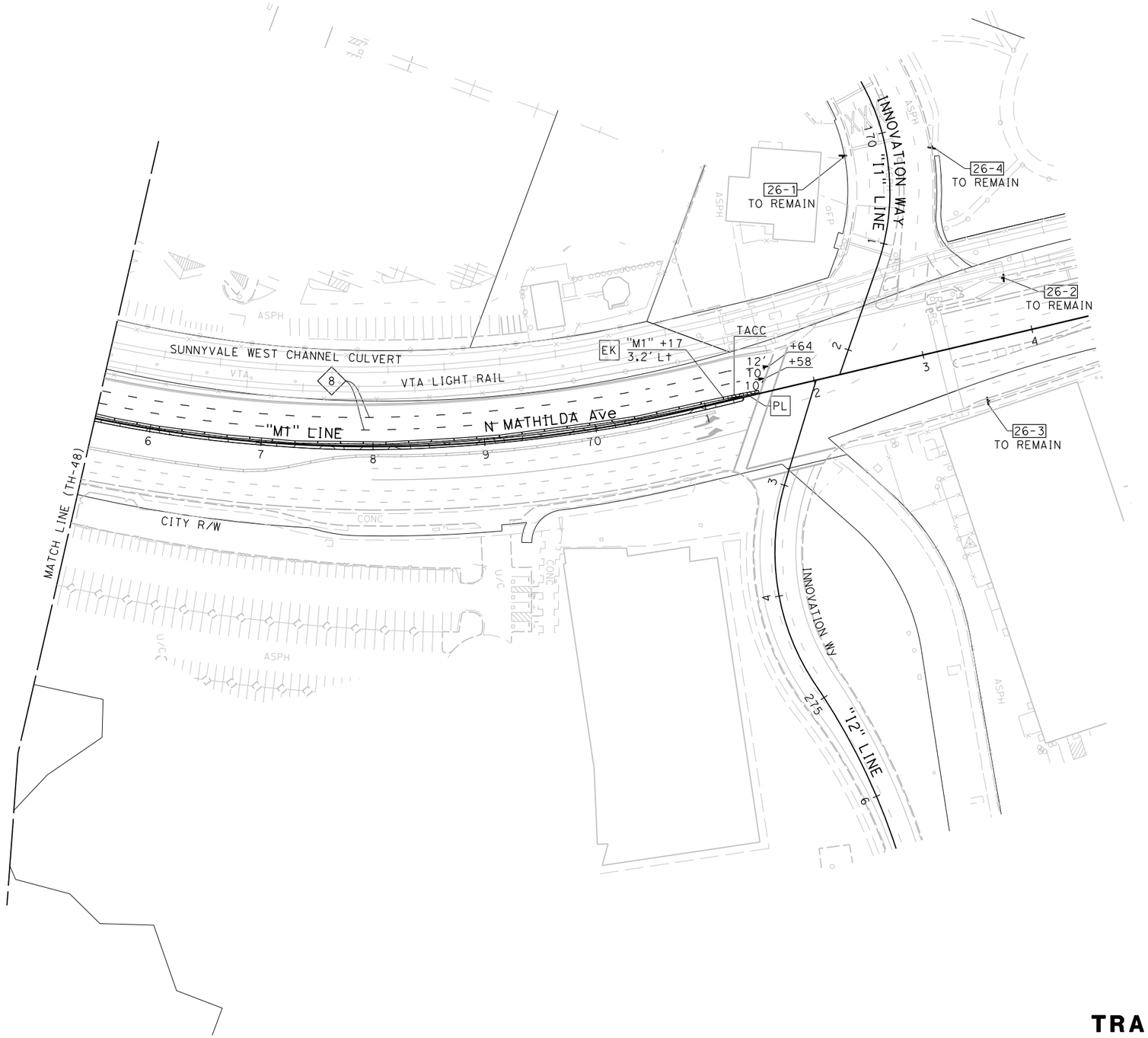

FOR NOTES AND LEGEND, SEE SHEET TH-1

THIS PLAN ACCURATE FOR TRAFFIC HANDLING WORK ONLY.

TRAFFIC HANDLING PLAN

STAGE 3 - PHASE 2

SCALE: 1" = 50'

TH-49

CALCULATED-DESIGNED BY	CARLOS RODRIGUEZ	REVISED BY	SCV
CHECKED BY	SHAWN VOGTMAN	DATE REVISED	01/5/18

STATE OF CALIFORNIA - DEPARTMENT OF TRANSPORTATION

Caltrans

CONSULTANT FUNCTIONAL SUPERVISOR: TIMOTHY J. LEE

LAST REVISION 01-15-18 | DATE PLOTTED => 6/20/2018 | TIME PLOTTED => 11:16:29 AM

X:\237_101_Mathilde\000_CAD\Sheets\MD-Traffic_Handling\MD-Plans\0413000204md049.dgn

BORDER LAST REVISED 7/2/2010 | USERNAME => Eilif | DGN FILE => 0413000204md049.dgn | RELATIVE BORDER SCALE IS IN INCHES 0 1 2 3 | UNIT 0000 | PROJECT NUMBER & PHASE 0413000204

Dist	COUNTY	ROUTE	POST MILES TOTAL PROJECT	SHEET No.	TOTAL SHEETS
04	SCL	101,237	45.2/45.8, 2.7/3.3	234	736

REGISTERED CIVIL ENGINEER — 6-13-18 DATE

6-20-18
PLANS APPROVAL DATE

REGISTERED PROFESSIONAL ENGINEER — STEVE LOUPE — No. 63575 — Exp. 9/30/18 — CIVIL — STATE OF CALIFORNIA

THE STATE OF CALIFORNIA OR ITS OFFICERS OR AGENTS SHALL NOT BE RESPONSIBLE FOR THE ACCURACY OR COMPLETENESS OF SCANNED COPIES OF THIS PLAN SHEET.

WMH CORPORATION
50 W San Fernando St
Suite 950
San Jose, CA 95113

VTA
3331 N First St
Building B
San Jose, Ca 95134

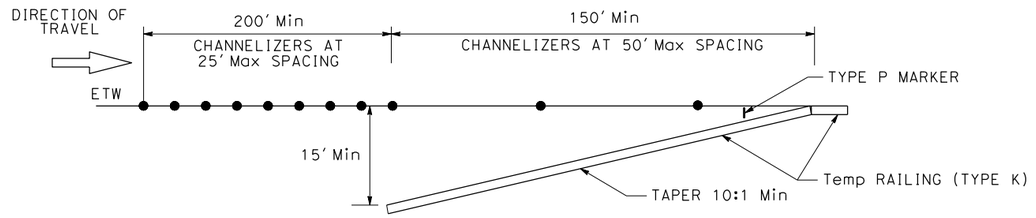

UNRESTRICTED - 15' OR GREATER

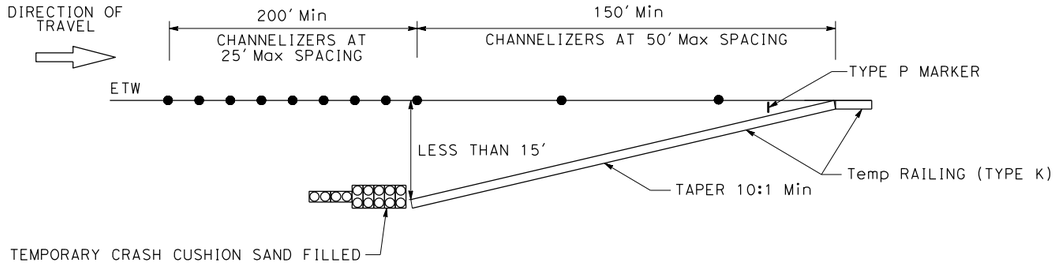

RESTRICTED - LESS THAN 15'

Temp RAILING (TYPE K) APPROACH TAPER

TRAFFIC HANDLING DETAILS

NO SCALE

THD-1

CALCULATED-DESIGNED BY	CHECKED BY	REVISED BY	DATE REVISED
CARLOS RODRIGUEZ	SHAWN VOGTMAN	SCV	01/15/18

STATE OF CALIFORNIA - DEPARTMENT OF TRANSPORTATION
Caltrans®

CONSULTANT FUNCTIONAL SUPERVISOR: TIMOTHY J. LEE

LAST REVISION 01-15-18 | DATE PLOTTED => 6/20/2018 | TIME PLOTTED => 11:14:36 AM

X:\237_101_Mathilda\000_CAD\Sheets\MD-Traffic_Handling\ME-Details\0413000204me001.dgn

BORDER LAST REVISED 7/2/2010 | USERNAME => Eilif | DGN FILE => 0413000204me001.dgn | RELATIVE BORDER SCALE IS IN INCHES 0 1 2 3 | UNIT 0000 | PROJECT NUMBER & PHASE 0413000204

TEMPORARY TRAFFIC CONTROL DEVICES

STAGE No.	PHASE No.	SHEET No.	TEMPORARY FENCE (TYPE CL-6)	TYPE III BARRICADE	CHANNELIZER (SURFACE MOUNTED)	TEMPORARY RAILING (TYPE K)
			LF	EA	EA	LF
1	1	TH-2			36	560
		TH-3			30	110
		TH-4	310		50	960
		TH-5				160
		TH-6				740
		TH-7	290		14	120
	2	TH-8				1840
		TH-9				600
		TH-10	190	2	25	2080
		TH-11				260
		TH-12				1180
	3	TH-13			17	820
		TH-14				400
		TH-15	975		2	1040
		TH-16	420			2440
		TH-17				320
	4	TH-18	200			80
		TH-19				100
		TH-20		1	6	560
		TH-21				940
		TH-22				180
2	1	TH-23	25			320
		TH-24		1		420
		TH-25		1	15	940
		TH-26		1		560
		TH-27			9	720
	2	TH-29	785			900
		TH-30	638			1600
		TH-31				580
		TH-32	20		49	1020
		TH-33				1120
		TH-34		1	10	660
	3	TH-35				120
		TH-36				1260
		TH-37				1680
		TH-38				40
	4	TH-40				800
		TH-41	500	1	17	680
3	1	TH-44				800
	2	TH-46			11	1300
		TH-47			16	1200
		TH-48			16	860
		TH-49				560
TOTAL			4353	8	323	33630

TEMPORARY RETAINING WALL

SHEET No.	STAGE	STATION LIMITS				RETAINING WALL AREA
		FROM		TO		SQFT
SC-1	STAGE 1 - PHASE 1	"M5"	68+08.78	"M5"	72+71.32	2790
SC-2	STAGE 1 - PHASE 2	"M3"	72+90.01	"M3"	75+25.10	1200
		TOTAL				3990

TEMPORARY PAVEMENT DELINEATION

STAGE No.	PHASE No.	PAINT TRAFFIC STRIPE (2-COAT)																PAINT PAVEMENT MARKING (2-COAT)		PAVEMENT MARKER (RETROREFLECTIVE) TYPE		
		8	9	21	24	25A	27B	32	36	36A	36B	37	38	38A	38B	39	39A	40	ARROWS & SYMBOLS	12" SOLID WHITE	D	G	H
		LF																	SQFT		EA		
1	1	973		1213		317	795		205	258	234			258	234	116		366	250	150		54	14
	2	8093		3688	1719		2878				642			1008	348			1391	425	560		59	
	3	753		991	1230	260	2238							684				1240	314	490			12
	4	3906		1010	231	2040	4546	303	220					2351		2443		1460	678	695	14	10	86
2	1	6880		1802	348		674				376			297				147	312	290		17	
	2	14306		2921	767		3081		381	68	713			340				557	213	745		51	
	3	6636		1907	2507	73	1408		311					523				1812	401	725		14	4
	4	4441		495		1014	3826					304	67	1525	65			330	303	380		34	43
3	1	4444		874			831						432	373				2348	267	675		19	
	2	8214					305							772				961	168	655			
TOTAL		131098																	8696		430		

Dist	COUNTY	ROUTE	POST MILES TOTAL PROJECT	SHEET No.	TOTAL SHEETS
04	SCL	101,237	45.2/45.8, 2.7/3.3	235	736

REGISTERED CIVIL ENGINEER — 6-13-18 DATE

6-20-18
PLANS APPROVAL DATE

REGISTERED PROFESSIONAL ENGINEER — STEVE LOUPE — No. 63575 — Exp. 9/30/18 — CIVIL — STATE OF CALIFORNIA

THE STATE OF CALIFORNIA OR ITS OFFICERS OR AGENTS SHALL NOT BE RESPONSIBLE FOR THE ACCURACY OR COMPLETENESS OF SCANNED COPIES OF THIS PLAN SHEET.

WMH CORPORATION
50 W San Fernando St
Suite 950
San Jose, CA 95113

VTA
3331 N First St
Building B
San Jose, Ca 95134

TRAFFIC HANDLING QUANTITIES

THQ- 1

STATE OF CALIFORNIA - DEPARTMENT OF TRANSPORTATION
CONSULTANT FUNCTIONAL SUPERVISOR: TIMOTHY J. LEE
CALCULATED-DESIGNED BY
CHECKED BY: SHAWN VOGTMAN
REVISED BY: SCV
DATE REVISED: 01/15/18
CARLOS RODRIGUEZ

LAST REVISION 01-15-18
DATE PLOTTED => 6/20/2018
TIME PLOTTED => 11:15:01 AM

X:\237_101_Morhilde\000_CAD\Sheets\MD-Traffic_Handling\MF-Quantities\0413000204mf001.dgn

BORDER LAST REVISED 7/2/2010 | USERNAME => Eilif | DGN FILE => 0413000204mf001.dgn | RELATIVE BORDER SCALE IS IN INCHES 0 1 2 3 | UNIT 0000 | PROJECT NUMBER & PHASE 0413000204

Dist	COUNTY	ROUTE	POST MILES TOTAL PROJECT	SHEET No.	TOTAL SHEETS
04	SCL	101,237	45.2/45.8, 2.7/3.3	236	736

REGISTERED CIVIL ENGINEER — 6-13-18 DATE

6-20-18
PLANS APPROVAL DATE

STEVE LOUPE No. 63575 Exp. 9/30/18 CIVIL — REGISTERED PROFESSIONAL ENGINEER — STATE OF CALIFORNIA

THE STATE OF CALIFORNIA OR ITS OFFICERS OR AGENTS SHALL NOT BE RESPONSIBLE FOR THE ACCURACY OR COMPLETENESS OF SCANNED COPIES OF THIS PLAN SHEET.

WMH CORPORATION
50 W San Fernando St
Suite 950
San Jose, CA 95113

VTA
3331 N First St
Building B
San Jose, Ca 95134

TEMPORARY CRASH CUSHIONS

SHEET No.	STAGE	STATION	ARRAY TYPE	TEMPORARY CRASH CUSHION MODULE	TEMPORARY ALTERNATIVE CRASH CUSHION
				EA	
TH-2	STAGE 1 - PHASE 1	"M6" 65+14.09	TS14	14	
TH-4	STAGE 1 - PHASE 1	"D4R" 105+87.28	TS14	14	
TH-4	STAGE 1 - PHASE 1	"M1" 53+81.40	TACC		1
TH-4	STAGE 1 - PHASE 1	"D5a" 7+25.95	TACC		1
TH-4	STAGE 1 - PHASE 1	"M1" 53+86.04	TACC		1
TH-5	STAGE 1 - PHASE 1	"M5" 67+49.56	TS14	14	
TH-6	STAGE 1 - PHASE 1	"D3" 14+30.90	TU11	11	
TH-6	STAGE 1 - PHASE 1	"D3" 20+89.08	TS14	14	
TH-7	STAGE 1 - PHASE 1	"B1" 80+14.02	TS11	11	
TH-8	STAGE 1 - PHASE 2	"M1" 29+79.73	TACC		1
TH-8	STAGE 1 - PHASE 2	"M1" 30+90.93	TS14	14	
TH-8	STAGE 1 - PHASE 2	"M1" 39+69.32	TACC		1
TH-8	STAGE 1 - PHASE 2	"M6" 64+74.57	TACC		1
TH-9	STAGE 1 - PHASE 2	"M1" 45+75.98	TS14	14	
TH-10	STAGE 1 - PHASE 2	"M1" 54+29.51	TACC		1
TH-10	STAGE 1 - PHASE 2	"D5A" 5+87.07	TACC		1
TH-10	STAGE 1 - PHASE 2	"M1" 59+23.55	TACC		1
TH-10	STAGE 1 - PHASE 2	"L6" 157+31.91	TU11	11	
TH-10	STAGE 1 - PHASE 2	"M1" 62+15.04	TACC		1
TH-10	STAGE 1 - PHASE 2	"M1" 64+18.87	TACC		1
TH-10	STAGE 1 - PHASE 2	"L6" 159+36.51	TACC		1
TH-10	STAGE 1 - PHASE 2	"L6" 160+54.14	TACC		1
TH-11	STAGE 1 - PHASE 2	"M5" 66+49.43	TS14	14	
TH-12	STAGE 1 - PHASE 2	"D3" 18+94.42	TU21	21	
TH-12	STAGE 1 - PHASE 2	"B1" 68+84.53	TS11	11	
TH-13	STAGE 1 - PHASE 3	"M1" 37+53.47	TS14	14	
TH-14	STAGE 1 - PHASE 3	"M1" 41+41.01	TS14	14	
TH-14	STAGE 1 - PHASE 3	"M6" 70+98.08	TS14	14	
TH-15	STAGE 1 - PHASE 3	"M1" 57+15.59	TACC		1
TH-15	STAGE 1 - PHASE 3	"D5a" 8+57.74	TACC		1
TH-15	STAGE 1 - PHASE 3	"M1" 61+53.41	TS14	14	
TH-15	STAGE 1 - PHASE 3	"M1" 62+16.46	TACC		1
TH-15	STAGE 1 - PHASE 3	"M1" 62+17.78	TS14	14	
TH-16	STAGE 1 - PHASE 3	"B1" 68+97.77	TS11	11	
TH-16	STAGE 1 - PHASE 3	"A3" 227+96.23	TS14	14	
TH-17	STAGE 1 - PHASE 3	"M5" 65+84.04	TS14	14	
TH-18	STAGE 1 - PHASE 4	"M1" 64+83.12	TACC		1
TH-19	STAGE 1 - PHASE 4	"M1" 43+25.10	TACC		1
TH-19	STAGE 1 - PHASE 4	"M1" 44+83.04	TACC		1
TH-20	STAGE 1 - PHASE 4	"D4R" 105+55.24	TACC		1
TH-20	STAGE 1 - PHASE 4	"M1" 62+18.05	TB14	14	
TH-20	STAGE 1 - PHASE 4	"M1" 64+83.12	TACC		1
TH-21	STAGE 1 - PHASE 4	"D3" 19+36.99	TS14	14	
TH-22	STAGE 1 - PHASE 4	"M5" 66+44.94	TS14	14	
TH-23	STAGE 2 - PHASE 1	"M1" 32+08.29	TACC		1
TH-24	STAGE 2 - PHASE 1	"M2" 67+77.03	TACC		1
TH-25	STAGE 2 - PHASE 1	"M1" 59+92.18	TACC		1
TH-25	STAGE 2 - PHASE 1	"L6" 159+58.21	TACC		1
TH-25	STAGE 2 - PHASE 1	"L6" 159+60.07	TACC		1
TH-26	STAGE 2 - PHASE 1	"M1" 71+46.83	TACC		1
TH-27	STAGE 2 - PHASE 1	"L6" 149+11.73	TS11	11	
TH-29	STAGE 2 - PHASE 2	"M1" 30+74.56	TS14	14	
TH-29	STAGE 2 - PHASE 2	"M1" 34+19.63	TU21	21	

TEMPORARY CRASH CUSHIONS

SHEET No.	STAGE	STATION	ARRAY TYPE	TEMPORARY CRASH CUSHION MODULE	TEMPORARY ALTERNATIVE CRASH CUSHION
				EA	
TH-30	STAGE 2 - PHASE 2	"M1" 44+88.02	TACC		1
TH-30	STAGE 2 - PHASE 2	"M2" 67+80.11	TACC		1
TH-30	STAGE 2 - PHASE 2	"M2" 71+58.66	TACC		1
TH-31	STAGE 2 - PHASE 2	"M3" 80+46.16	TU21	21	
TH-32	STAGE 2 - PHASE 2	"L6"161+07.77	TACC		1
TH-32	STAGE 2 - PHASE 2	"L6" 159+67.00	TACC		1
TH-32	STAGE 2 - PHASE 2	"L6" 159+96.72	TACC		1
TH-32	STAGE 2 - PHASE 2	"L6" 160+51.04	TACC		1
TH-33	STAGE 2 - PHASE 2	"M1" 71+52.16	TACC		1
TH-36	STAGE 2 - PHASE 3	"C" 374+17.39	TS14	14	
TH-36	STAGE 2 - PHASE 3	"M2" 67+90.85	TACC		1
TH-37	STAGE 2 - PHASE 3	"C" 392+49.65	TS14	14	
TH-38	STAGE 2 - PHASE 3	"L6" 159+92.86	TACC		1
TH-38	STAGE 2 - PHASE 3	"L6" 160+05.71	TACC		1
TH-38	STAGE 2 - PHASE 3	"L6" 160+55.28	TACC		1
TH-40	STAGE 2 - PHASE 4	"M1" 31+01.90	TU21	21	
TH-40	STAGE 2 - PHASE 4	"M1" 31+88.80	TACC		1
TH-46	STAGE 3 - PHASE 2	"M1" 31+14.01	TACC		1
TH-46	STAGE 3 - PHASE 2	"M1" 37+99.64	TACC		1
TH-47	STAGE 3 - PHASE 2	"M1" 46+35.83	TACC		1
TH-47	STAGE 3 - PHASE 2	"M1" 52+83.53	TACC		1
TH-48	STAGE 3 - PHASE 2	"M1" 53+92.95	TACC		1
TH-48	STAGE 3 - PHASE 2	"M1" 56+04.48	TACC		1
TH-48	STAGE 3 - PHASE 2	"M1" 62+12.85	TACC		1
TH-49	STAGE 3 - PHASE 2	"M1" 71+29.84	TACC		1
TOTAL				430	48

TRAFFIC HANDLING QUANTITIES

THQ-2

REVISED BY	DATE REVISED
SCV	01/15/18

CARLOS RODRIGUEZ — CALCULATED-DESIGNED BY
SHAWN VOGTMAN — CHECKED BY
TIMOTHY J. LEE — CONSULTANT FUNCTIONAL SUPERVISOR

STATE OF CALIFORNIA - DEPARTMENT OF TRANSPORTATION

X:\237_101_Morhill\e\000_CAD\Sheets\MD-Traffic_Handling\MF-Quantities\0413000204mf002.dgn

LAST REVISION 01-15-18 | DATE PLOTTED => 6/20/2018 | TIME PLOTTED => 11:15:04 AM

BORDER LAST REVISED 7/2/2010 | USERNAME => Eilif | DGN FILE => 0413000204mf002.dgn | RELATIVE BORDER SCALE IS IN INCHES 0 1 2 3 | UNIT 0000 | PROJECT NUMBER & PHASE 0413000204

CONSTRUCTION AREA SIGNS

STAGE	PHASE	SHEET No.	SIGN No.	SIGN CODE	PANEL SIZE (in x in)	SIGN MESSAGE	NUMBER AND SIZE OF POST (EA - in x in)	No. OF SIGNS
1	1	TH-2	2-1	W20-1	36 x 36	ROAD WORK AHEAD	1 - 4 x 4	1
			2-2	R2-12	24 x 36	END WORK SPEED LIMIT	1 - 4 x 6	1
				G20-2	36 x 18	END ROAD WORK		
			2-3	R2-12	24 x 36	END WORK SPEED LIMIT	1 - 4 x 6	1
				G20-2	36 x 18	END ROAD WORK		
			2-4	W20-1	36 x 36	ROAD WORK AHEAD	1 - 4 x 4	1
			2-5	R2-12	24 x 36	END WORK SPEED LIMIT	1 - 4 x 6	1
				G20-2	36 x 18	END ROAD WORK		
			2-6	W23-2	36 x 36	NEW TRAFFIC PATTERN AHEAD	1 - 6 x 6	1
				R2-1 (35)	24 x 30	SPEED LIMIT		
				G20-5aP	24 x 18	WORK ZONE		
			2-7	W20-1	36 x 36	ROAD WORK AHEAD	1 - 4 x 4	1
			2-8	R2-1 (35)	24 x 30	SPEED LIMIT	1 - 4 x 4	1
				G20-5aP	24 x 18	WORK ZONE		
			2-9	W12-2 (15'-2")	36 x 36	LOW CLEARANCE	1 - 4 x 6	1
				C30A (CA)	30 x 30	SHOULDER CLOSED		
			2-10	W21-1	36 x 36	WORKERS	1 - 6 x 8	1
				W21-5	36 x 36	SHOULDER WORK		
				W13-1P (20)	24 x 24	ADVISORY SPEED		
		TH-3	3-1	R2-12	24 x 36	END WORK SPEED LIMIT	1 - 4 x 6	1
				G20-2	36 x 18	END ROAD WORK		
			3-2	W21-1	36 x 36	WORKERS	1 - 4 x 6	1
				W21-5	36 x 36	SHOULDER WORK		
			3-3	W20-1	36 x 36	ROAD WORK AHEAD	1 - 4 x 6	1
				C24 (CA)	30 x 30	SHOULDER WORK AHEAD		
			3-4	C30A (CA)	30 x 30	SHOULDER CLOSED	1 - 4 x 4	1
			3-5	R2-1 (35)	24 x 30	SPEED LIMIT	1 - 6 x 6	1
				G20-5aP	24 x 18	WORK ZONE		
				C23 (CA)	36 x 36	RAMP WORK AHEAD		
			3-6	W20-1	36 x 36	ROAD WORK AHEAD	1 - 4 x 4	1
			3-7	R2-1 (35)	24 x 30	SPEED LIMIT	1 - 4 x 4	1
				G20-5aP	24 x 18	WORK ZONE		
			3-8	W20-1	36 x 36	ROAD WORK AHEAD	1 - 4 x 4	1
			3-9	R2-1 (35)	24 x 30	SPEED LIMIT	1 - 4 x 4	1
				G20-5aP	24 x 18	WORK ZONE		
			3-10	R2-12	24 x 36	END WORK SPEED LIMIT	1 - 4 x 4	1
			3-11	W20-1	36 x 36	ROAD WORK AHEAD	1 - 4 x 4	1
			3-12	R2-12	24 x 36	END WORK SPEED LIMIT	1 - 4 x 6	1
				G20-2	36 x 18	END ROAD WORK		
			3-13	R2-12	24 x 36	END WORK SPEED LIMIT	1 - 4 x 6	1
				G20-2	36 x 18	END ROAD WORK		
		TH-4	4-1	W20-1	36 x 36	ROAD WORK AHEAD	1 - 4 x 4	1
			4-2	W20-1	36 x 36	ROAD WORK AHEAD	1 - 4 x 4	1
			4-3	R2-12	24 x 36	END WORK SPEED LIMIT	1 - 4 x 6	1
				G20-2	36 x 18	END ROAD WORK		
			4-4	W20-1	36 x 36	ROAD WORK AHEAD	1 - 4 x 4	1
			4-5	G20-2	36 x 18	END ROAD WORK	1 - 4 x 4	1
			4-6	W20-1	36 x 36	ROAD WORK AHEAD	1 - 4 x 4	1
			4-7	G20-2	36 x 18	END ROAD WORK	1 - 4 x 4	1
			4-8	G20-2	36 x 18	END ROAD WORK	1 - 4 x 4	1
		TH-5	5-1	W20-1	36 x 36	ROAD WORK AHEAD	1 - 4 x 4	1
			5-2	C12 (CA)	36 x 36	NARROW LANE	1 - 4 x 4	1
			5-3	C30A (CA)	30 x 30	SHOULDER CLOSED	1 - 4 x 4	1
		TH-6	6-1	C30A (CA)	30 x 30	SHOULDER CLOSED	1 - 4 x 4	1
			6-2	G20-2	36 x 18	END ROAD WORK	1 - 4 x 4	1

Dist	COUNTY	ROUTE	POST MILES TOTAL PROJECT	SHEET No.	TOTAL SHEETS
04	SCL	101,237	45.2/45.8, 2.7/3.3	237	736

REGISTERED CIVIL ENGINEER — DATE: 6-13-18

STEVE LOUPE No. 63575 Exp. 9/30/18 CIVIL — REGISTERED PROFESSIONAL ENGINEER — STATE OF CALIFORNIA

6-20-18
PLANS APPROVAL DATE

THE STATE OF CALIFORNIA OR ITS OFFICERS OR AGENTS SHALL NOT BE RESPONSIBLE FOR THE ACCURACY OR COMPLETENESS OF SCANNED COPIES OF THIS PLAN SHEET.

WMH CORPORATION
50 W San Fernando St
Suite 950
San Jose, CA 95113

VTA
3331 N First St
Building B
San Jose, Ca 95134

REVISED BY	DATE REVISED
SCV	01/15/18

CALCULATED-DESIGNED BY: CARLOS RODRIGUEZ
CHECKED BY: SHAWN VOGTMAN
CONSULTANT FUNCTIONAL SUPERVISOR: TIMOTHY J. LEE

STATE OF CALIFORNIA - DEPARTMENT OF TRANSPORTATION

X:\237_101_Mathilda\000_CAD\Sheets\MD-Traffic_Handling\MF-Quantities\0413000204mf003.dgn

TRAFFIC HANDLING QUANTITIES

THQ-3

LAST REVISION: 01-15-18
DATE PLOTTED => 6/20/2018
TIME PLOTTED => 11:15:07 AM

BORDER LAST REVISED 7/2/2010
USERNAME => Eilif
DGN FILE => 0413000204mf003.dgn
RELATIVE BORDER SCALE IS IN INCHES 0 1 2 3
UNIT 0000
PROJECT NUMBER & PHASE 0413000204

CONSTRUCTION AREA SIGNS

STAGE	PHASE	SHEET No.	SIGN No.	SIGN CODE	PANEL SIZE (in x in)	SIGN MESSAGE	NUMBER AND SIZE OF POST (EA - in x in)	No. OF SIGNS
1	2	TH-8	8-1	R2-1 (35)	24 x 30	SPEED LIMIT	1 - 4 x 6	1
				C23 (CA)	36 x 36	RAMP WORK AHEAD		
			8-2	C12 (CA)	36 x 36	NARROW LANE	1 - 4 x 6	1
				W21-5	36 x 36	SHOULDER WORK		
			8-3	W12-2 (15'-2")	36 x 36	LOW CLEARANCE	1 - 6 x 8	1
				W21-1	36 x 36	WORKERS		
				W13-1P (20)	24 x 24	ADVISORY SPEED		
			8-4	G8-7 (CA)	60 x 36	DESTINATION	1 - 4 x 4	1
		TH-9	9-1	R2-1 (35)	24 x 30	SPEED LIMIT	2 - 6 x 8	1
				G20-5aP	24 x 18	WORK ZONE		
				C23 (CA)	36 x 36	RAMP WORK AHEAD		
				W21-5	36 x 36	SHOULDER WORK		
				W34C (15'-2") (CA)	36 x 54	CAUTION VERTICAL CLEARANCE		
				G85-5 (CA)	36 x 24	DESTINATION		
			9-2	W21-5	36 x 36	SHOULDER WORK	1 - 4 x 4	1
			9-3	G92 (CA)	24 x 30	FREEWAY ENTRANCE	1 - 4 x 6	1
				G26-2 (101) (CA)	21 x 18	U.S. ROUTE MARKER		
				M3-3	24 x 12	CARDINAL DIRECTION		
				M6-2 (Rt)	21 x 15	DIRECTIONAL ARROW		
		TH-10	10-1	W20-1	36 x 36	ROAD WORK AHEAD	1 - 4 x 4	1
			10-2	R3-1	24 x 24	MOVEMENT PROHIBITION	1-4 x 4	1
			10-3	R5-1	30 x 30	DO NOT ENTER	1 - 4 x 6	1
				R5-1a	30 x 18	WRONG WAY		
			10-4	R5-1	30 x 30	DO NOT ENTER	1 - 4 x 6	1
				R5-1a	30 x 18	WRONG WAY		
			10-5	W20-1	36 x 36	ROAD WORK AHEAD	1 - 4 x 6	1
				SC10 (CA)	48 x 30	LANE CLOSED AHEAD		
			10-6	SC11 (CA)	42 x 30	LANE CLOSED	1 - 4 x 4	1
			10-7	W12-1	30 x 30	DOUBLE ARROW	1 - 4 x 4	1
			10-8	R3-2	24 x 24	MOVEMENT PROHIBITION	1 - 4 x 4	1
		TH-12	12-1	W23-2	36 x 36	NEW TRAFFIC PATTERN AHEAD	1 - 6 x 8	1
				W21-5	36 x 36	SHOULDER WORK		
				W1-1L	36 x 36	TURN AND CURVE		
			12-2	W1-1a (25) (Lt)	36 x 36	TURN AND CURVE	1 - 4 x 4	1
			12-3	W1-8 (Rt)	18 x 24	CHEVRON	SSBM	1
			12-4	W1-8 (Rt)	18 x 24	CHEVRON	SSBM	1
			12-5	R11-2	48 x 30	ROAD CLOSED	1 - 4 x 4	1
			12-6	W1-8 (Lt)	18 x 24	CHEVRON	SSBM	1
			12-7	W1-8 (Lt)	18 x 24	CHEVRON	SSBM	1
			12-8	W1-1a (25) (Rt)	36 x 36	TURN AND CURVE	1 - 4 x 4	1
			12-9	W23-2	36 x 36	NEW TRAFFIC PATTERN AHEAD	1 - 4 x 6	1
				W1-1 (Rt)	36 x 36	TURN AND CURVE		
			12-10	G20-2	36 x 18	END ROAD WORK	1 - 4 x 4	1
1	3	TH-13	13-1	R2-1 (35)	24 x 30	SPEED LIMIT	1 - 4 x 4	1
				G20-5aP	24 x 18	WORK ZONE		
			13-2	R2-1 (35)	24 x 30	SPEED LIMIT	1 - 4 x 4	1
				G20-5aP	24 x 18	WORK ZONE		
			13-3	W12-2 (15'-2")	36 x 36	LOW CLEARANCE	1 - 4 x 6	1
				W13-1P (20)	24 x 24	ADVISORY SPEED		
			13-4	G92 (CA)	24 x 30	FREEWAY ENTRANCE	1 - 4 x 6	1
				G26-2 (101) (CA)	21 x 18	U.S. ROUTE MARKER		
				M3-3	24 x 12	CARDINAL DIRECTION		
				M6-2 (Rt)	21 x 15	DIRECTIONAL ARROW		
			13-5	G8-7 (CA)	60 x 36	DESTINATION	2 - 4 x 4	1
		TH-14	14-1	R2-1 (35)	24 x 30	SPEED LIMIT	2 - 6 x 8	1
				G20-5aP	24 x 18	WORK ZONE		
				W21-1	36 x 36	WORKERS		
				W21-5	36 x 36	SHOULDER WORK		
				W34C (15'-2") (CA)	36 x 54	CAUTION VERTICAL CLEARANCE		
				G85-5 (CA)	36 x 24	DESTINATION		

Dist	COUNTY	ROUTE	POST MILES TOTAL PROJECT	SHEET No.	TOTAL SHEETS
04	SCL	101,237	45.2/45.8, 2.7/3.3	238	736

6-13-18
REGISTERED CIVIL ENGINEER — DATE

6-20-18
PLANS APPROVAL DATE

REGISTERED PROFESSIONAL ENGINEER — STEVE LOUPE — No. 63575 — Exp. 9/30/18 — CIVIL — STATE OF CALIFORNIA

THE STATE OF CALIFORNIA OR ITS OFFICERS OR AGENTS SHALL NOT BE RESPONSIBLE FOR THE ACCURACY OR COMPLETENESS OF SCANNED COPIES OF THIS PLAN SHEET.

WMH CORPORATION
50 W San Fernando St
Suite 950
San Jose, CA 95113

VTA
3331 N First St
Building B
San Jose, Ca 95134

TRAFFIC HANDLING QUANTITIES

THQ-4

REVISED BY	DATE REVISED
SCV	01/15/18

CALCULATED-DESIGNED BY: CARLOS RODRIGUEZ
CHECKED BY: SHAWN VOGTMAN
CONSULTANT FUNCTIONAL SUPERVISOR: TIMOTHY J. LEE
STATE OF CALIFORNIA - DEPARTMENT OF TRANSPORTATION

LAST REVISION 01-15-18
DATE PLOTTED => 6/20/2018
TIME PLOTTED => 11:15:11 AM

X:\237_101_Marhildo\000_CAD\Sheets\MD-Traffic_Handling\MF-Quantities\0413000204mf004.dgn

BORDER LAST REVISED 7/2/2010
USERNAME => Eilif
DGN FILE => 0413000204mf004.dgn
RELATIVE BORDER SCALE IS IN INCHES 0 1 2 3
UNIT 0000
PROJECT NUMBER & PHASE 0413000204

Dist	COUNTY	ROUTE	POST MILES TOTAL PROJECT	SHEET No.	TOTAL SHEETS
04	SCL	101,237	45.2/45.8, 2.7/3.3	239	736

REGISTERED CIVIL ENGINEER — DATE: 6-13-18

PLANS APPROVAL DATE: 6-20-18

STEVE LOUPE No. 63575 Exp. 9/30/18 CIVIL — REGISTERED PROFESSIONAL ENGINEER — STATE OF CALIFORNIA

THE STATE OF CALIFORNIA OR ITS OFFICERS OR AGENTS SHALL NOT BE RESPONSIBLE FOR THE ACCURACY OR COMPLETENESS OF SCANNED COPIES OF THIS PLAN SHEET.

WMH CORPORATION
50 W San Fernando St
Suite 950
San Jose, CA 95113

VTA
3331 N First St
Building B
San Jose, Ca 95134

CONSTRUCTION AREA SIGNS

STAGE	PHASE	SHEET No.	SIGN No.	SIGN CODE	PANEL SIZE (in x in)	SIGN MESSAGE	NUMBER AND SIZE OF POST (EA - in x in)	No. OF SIGNS
1	3	TH-15	15-1	R3-1	24 x 24	MOVEMENT PROHIBITION	1-4 x 4	1
			15-2	R5-1	30 x 30	DO NOT ENTER	1 - 4 x 6	1
				R5-1a	30 x 18	WRONG WAY		
			15-3	R5-1	30 x 30	DO NOT ENTER	1 - 4 x 6	1
				R5-1a	30 x 18	WRONG WAY		
		TH-16	16-1	W1-8 (Rt)	18 x 24	CHEVRON	SSBM	1
			16-2	W1-8 (Rt)	18 x 24	CHEVRON	SSBM	1
			16-3	R11-2	48 x 30	ROAD CLOSED	1 - 4 x 4	1
			16-4	W1-8 (Lt)	18 x 24	CHEVRON	SSBM	1
			16-5	W1-8 (Lt)	18 x 24	CHEVRON	SSBM	1
			16-6	C12 (CA)	36 x 36	NARROW LANE	1 - 4 x 4	1
			16-7	C30A (CA)	30 x 30	SHOULDER CLOSED	1 - 4 x 4	1
	4	TH-18	18-1	W20-1	36 x 36	ROAD WORK AHEAD	2 - 6 x 8	1
				W23-2	36 x 36	NEW TRAFFIC PATTERN AHEAD		1
				W21-5	36 x 36	SHOULDER WORK		
				R2-1 (35)	24 x 30	SPEED LIMIT		
				G20-5aP	24 x 18	WORK ZONE		
			18-2	W20-1	36 x 36	ROAD WORK AHEAD	1 - 6 x 8	1
				W23-2	36 x 36	NEW TRAFFIC PATTERN AHEAD		
				W21-5	36 x 36	SHOULDER WORK		
			18-3	W20-1	36 x 36	ROAD WORK AHEAD	1 - 6 x 8	1
				W23-2	36 x 36	NEW TRAFFIC PATTERN AHEAD		
				W21-5	36 x 36	SHOULDER WORK		
			18-4	W20-1	36 x 36	ROAD WORK AHEAD	1 - 4 x 6	1
				W23-2	36 x 36	NEW TRAFFIC PATTERN AHEAD		
			18-5	R2-1 (35)	24 x 30	SPEED LIMIT	1 - 4 x 4	1
				G20-5aP	24 x 18	WORK ZONE		
			18-6	R2-1 (35)	24 x 30	SPEED LIMIT	1 - 4 x 4	1
				G20-5aP	24 x 18	WORK ZONE		
		TH-19	19-1	R2-1 (35)	24 x 30	SPEED LIMIT	2 - 6 x 8	1
				G20-5aP	24 x 18	WORK ZONE		
				W34C (15'-2") (CA)	36 x 54	CAUTION VERTICAL CLEARANCE		
				G85-5 (CA)	36 x 24	DESTINATION		
		TH-20	20-1	G92 (CA)	24 x 30	FREEWAY ENTRANCE	1 - 4 x 6	1
				G28-2 (237) (CA)	21 x 18	STATE ROUTE MARKER		
				M3-3	24 x 12	CARDINAL DIRECTION		
				M6-2 (Lt)	21 x 15	DIRECTIONAL ARROW		
			20-2	G20-2	36 x 18	END ROAD WORK	1 - 4 x 4	1
			20-3	W20-1	36 x 36	ROAD WORK AHEAD	1 - 6 x 8	1
				W23-2	36 x 36	NEW TRAFFIC PATTERN AHEAD		
				C30A (CA)	30 x 30	SHOULDER CLOSED		
		TH-21	21-1	C12 (CA)	36 x 36	NARROW LANE	1 - 4 x 4	1
			21-2	W20-1	36 x 36	ROAD WORK AHEAD	1 - 6 x 8	1
				W23-2	36 x 36	NEW TRAFFIC PATTERN AHEAD		
				C30A (CA)	30 x 30	SHOULDER CLOSED		
			21-3	G20-2	36 x 18	END ROAD WORK	1 - 4 x 4	1
			21-4	G20-2	36 x 18	END ROAD WORK	1 - 4 x 4	1

TRAFFIC HANDLING QUANTITIES

THQ-5

CALCULATED-DESIGNED BY			
CHECKED BY			
REVISED BY	SCV		
DATE REVISED	01/15/18		
CARLOS RODRIGUEZ			
SHAWN VOGTMAN			
CONSULTANT FUNCTIONAL SUPERVISOR			
TIMOTHY J. LEE			
STATE OF CALIFORNIA - DEPARTMENT OF TRANSPORTATION			
Caltrans			

LAST REVISION 01-15-18
DATE PLOTTED => 6/20/2018
TIME PLOTTED => 11:15:18 AM

X:\237_101_Mathilda\000_CAD\Sheets\MD-Traffic_Handling\MF-Quantities\0413000204mf005.dgn

BORDER LAST REVISED 7/2/2010 | USERNAME => Eilif | DGN FILE => 0413000204mf005.dgn | RELATIVE BORDER SCALE IS IN INCHES 0 1 2 3 | UNIT 0000 | PROJECT NUMBER & PHASE 0413000204

CONSTRUCTION AREA SIGNS

STAGE	PHASE	SHEET No.	SIGN No.	SIGN CODE	PANEL SIZE (in x in)	SIGN MESSAGE	NUMBER AND SIZE OF POST (EA - in x in)	No. OF SIGNS
2	1	TH-23	23-1	W20-1	36 x 36	ROAD WORK AHEAD	1 - 6 x 8	1
				W23-2	36 x 36	NEW TRAFFIC PATTERN AHEAD		
				W21-5	36 x 36	SHOULDER WORK		
				R2-1 (35)	24 x 30	SPEED LIMIT		
				G20-5aP	24 x 18	WORK ZONE		
			23-2	W20-1	36 x 36	ROAD WORK AHEAD	1 - 6 x 8	1
				W23-2	36 x 36	NEW TRAFFIC PATTERN AHEAD		
				W21-5	36 x 36	SHOULDER WORK		
			23-3	W20-1	36 x 36	ROAD WORK AHEAD	1 - 6 x 8	1
				W23-2	36 x 36	NEW TRAFFIC PATTERN AHEAD		
				W21-5	36 x 36	SHOULDER WORK		
			23-4	W20-1	36 x 36	ROAD WORK AHEAD	1 - 4 x 6	1
				W23-2	36 x 36	NEW TRAFFIC PATTERN AHEAD		
			23-5	R2-1 (35)	24 x 30	SPEED LIMIT	1 - 4 x 4	1
				G20-5aP	24 x 18	WORK ZONE		
			23-6	R2-1 (35)	24 x 30	SPEED LIMIT	1 - 4 x 4	1
				G20-5aP	24 x 18	WORK ZONE		
		TH-24	24-1	W21-1	36 x 36	WORKERS	1 - 4 x 6	1
				W21-5	36 x 36	SHOULDER WORK		
			24-2	R2-1 (35)	24 x 30	SPEED LIMIT	2 - 6 x 8	1
				G20-5aP	24 x 18	WORK ZONE		
				W34C (15'-2") (CA)	36 x 54	CAUTION VERTICAL CLEARANCE		
				G85-5 (CA)	36 x 24	DESTINATION		
			24-3	G92 (CA)	24 x 30	FREEWAY ENTRANCE	1 - 6 x 8	1
				G26-2 (101) (CA)	21 x 18	U.S. ROUTE MARKER		
				M3-1	24 x 12	CARDINAL DIRECTION		
				M6-2a (Lt)	21 x 15	DIRECTIONAL ARROW		
				W13-1P (20)	24 x 24	ADVISORY SPEED		
				C30A (CA)	30 x 30	SHOULDER CLOSED		
			24-4	W12-1 (14' 11")	36 x 36	LOW CLEARANCE	1 - 4 x 4	1
		TH-25	25-1	W20-1	36 x 36	ROAD WORK AHEAD	1 - 4 x 6	1
				W23-2	36 x 36	NEW TRAFFIC PATTERN AHEAD		
		TH-26	26-1	W20-1	36 x 36	ROAD WORK AHEAD	1 - 4 x 6	1
				W23-2	36 x 36	NEW TRAFFIC PATTERN AHEAD		
			26-2	W20-1	36 x 36	ROAD WORK AHEAD	1 - 6 x 8	1
				W23-2	36 x 36	NEW TRAFFIC PATTERN AHEAD		
				R2-1 (35)	24 x 30	SPEED LIMIT		
				G20-5aP	24 x 18	WORK ZONE		
			26-3	G20-2	36 x 18	END ROAD WORK	1 - 4 x 4	1
			26-4	G20-2	36 x 18	END ROAD WORK	1 - 4 x 4	1
		TH-27	27-1	G20-2	36 x 18	END ROAD WORK	1 - 4 x 4	1
			27-2	W20-1	36 x 36	ROAD WORK AHEAD	1 - 6 x 8	1
				W23-2	36 x 36	NEW TRAFFIC PATTERN AHEAD		
				C30A (CA)	30 x 30	SHOULDER CLOSED		
	2	TH-29	29-1	G92 (CA)	24 x 30	FREEWAY ENTRANCE	1 - 4 x 6	1
				G26-2 (101) (CA)	21 x 18	U.S. ROUTE MARKER		
				M3-3	24 x 12	CARDINAL DIRECTION		
				M6-2 (Rt)	21 x 15	DIRECTIONAL ARROW		
			29-2	R2-1 (35)	24 x 30	SPEED LIMIT	1 - 4 x 4	1
				G20-5aP	24 x 18	WORK ZONE		

Dist	COUNTY	ROUTE	POST MILES TOTAL PROJECT	SHEET No.	TOTAL SHEETS
04	SCL	101,237	45.2/45.8, 2.7/3.3	240	736

6-13-18
REGISTERED CIVIL ENGINEER — DATE

6-20-18
PLANS APPROVAL DATE

REGISTERED PROFESSIONAL ENGINEER
STEVE LOUPE
No. 63575
Exp. 9/30/18
CIVIL
STATE OF CALIFORNIA

THE STATE OF CALIFORNIA OR ITS OFFICERS OR AGENTS SHALL NOT BE RESPONSIBLE FOR THE ACCURACY OR COMPLETENESS OF SCANNED COPIES OF THIS PLAN SHEET.

WMH CORPORATION
50 W San Fernando St
Suite 950
San Jose, CA 95113

VTA
3331 N First St
Building B
San Jose, Ca 95134

CALCULATED-DESIGNED BY: CARLOS RODRIGUEZ
CHECKED BY: SHAWN VOGTMAN
REVISED BY: SCV
DATE REVISED: 01/15/18
CONSULTANT FUNCTIONAL SUPERVISOR: TIMOTHY J. LEE

STATE OF CALIFORNIA - DEPARTMENT OF TRANSPORTATION
Caltrans

X:\237_101_Mathilda\000_CAD\Sheets\MD-Traffic_Handling\MF-Quantities\0413000204mf006.dgn

TRAFFIC HANDLING QUANTITIES

THQ-6

LAST REVISION 01-15-18
DATE PLOTTED => 6/20/2018
TIME PLOTTED => 11:15:23 AM

BORDER LAST REVISED 7/2/2010
USERNAME => Eilif
DGN FILE => 0413000204mf006.dgn
RELATIVE BORDER SCALE IS IN INCHES 0 1 2 3
UNIT 0000
PROJECT NUMBER & PHASE 0413000204

CONSTRUCTION AREA SIGNS

STAGE	PHASE	SHEET No.	SIGN No.	SIGN CODE	PANEL SIZE (in x in)	SIGN MESSAGE	NUMBER AND SIZE OF POST (EA - in x in)	No. OF SIGNS
2	2	TH-30	30-1	R2-1 (35)	24 x 30	SPEED LIMIT	1 - 4 x 4	1
				G20-5aP	24 x 18	WORK ZONE		
			30-2	G92 (CA)	24 x 30	FREEWAY ENTRANCE	1 - 6 x 8	1
				G26-2 (101) (CA)	21 x 18	U.S. ROUTE MARKER		
				M6-2a (R†)	21 x 15	DIRECTIONAL ARROW		
				W13-1P (20)	24 x 24	ADVISORY SPEED		
			30-3	M3-2	24 x 12	CARDINAL DIRECTION	1 - 6 x 8	1
				G28-2 (237) (CA)	21 x 18	STATE ROUTE MARKER		
				M6-3	21 x 15	DIRECTIONAL ARROW		
				M3-1	24 x 12	CARDINAL DIRECTION		
				G26-2 (101) (CA)	21 x 18	U.S. ROUTE MARKER		
				M6-2 (R†)	21 x 15	DIRECTIONAL ARROW		
		TH-31	31-1	W20-1	36 x 36	ROAD WORK AHEAD	1 - 4 x 4	1
			31-2	C12 (CA)	36 x 36	NARROW LANE	1 - 4 x 4	1
		TH-32	32-1	W20-1	36 x 36	ROAD WORK AHEAD	1 - 6 x 8	1
				W23-2	36 x 36	NEW TRAFFIC PATTERN AHEAD		
				C30A (CA)	30 x 30	SHOULDER CLOSED		
		TH-33	33-1	W20-1	36 x 36	ROAD WORK AHEAD	1 - 6 x 8	1
				W23-2	36 x 36	NEW TRAFFIC PATTERN AHEAD		
				R2-1 (35)	24 x 30	SPEED LIMIT		
				G20-5aP	24 x 18	WORK ZONE		
				C30A (CA)	30 x 30	SHOULDER CLOSED		
	3	TH-35	35-1	W20-1	36 x 36	ROAD WORK AHEAD	1-4 x 6	1
				R2-1 (35)	24 x 30	SPEED LIMIT		
				G20-5aP	24 x 18	WORK ZONE		
		TH-36	36-1	G20-2	36 x 18	END ROAD WORK	1 - 4 x 4	1
			36-2	C30A (CA)	30 x 30	SHOULDER CLOSED	1 - 4 x 4	1
			36-3	G92 (CA)	24 x 30	FREEWAY ENTRANCE	1 - 6 x 8	1
				G26-2 (101) (CA)	21 x 18	U.S. ROUTE MARKER		
				M3-1	24 x 12	CARDINAL DIRECTION		
				M6-2a (L†)	21 x 15	DIRECTIONAL ARROW		
				W13-1P (20)	24 x 24	ADVISORY SPEED		
			36-4	R2-1 (35)	24 x 30	SPEED LIMIT	1 - 4 x 4	1
				G20-5aP	24 x 18	WORK ZONE		
		TH-37	37-1	W20-1	36 x 36	ROAD WORK AHEAD	1 - 4 x 4	1
			37-2	C12 (CA)	36 x 36	NARROW LANE	1 - 4 x 4	1
				C30A (CA)	30 x 30	SHOULDER CLOSED		
	4	TH-40	40-1	W20-1	36 x 36	ROAD WORK AHEAD	1 - 6 x 8	1
				W23-2	36 x 36	NEW TRAFFIC PATTERN AHEAD		
				R2-1 (35)	24 x 30	SPEED LIMIT		
				G20-5aP	24 x 18	WORK ZONE		
			40-2	W20-1	36 x 36	ROAD WORK AHEAD	1 - 4 x 6	1
				W23-2	36 x 36	NEW TRAFFIC PATTERN AHEAD		
			40-3	R2-1 (35)	24 x 30	SPEED LIMIT	1 - 4 x 6	1
				G20-5aP	24 x 18	WORK ZONE		
				W21-5	36 x 36	SHOULDER WORK		
			40-4	G92 (CA)	24 x 30	FREEWAY ENTRANCE	1 - 6 x 8	1
				G26-2 (101) (CA)	21 x 18	U.S. ROUTE MARKER		
				M3-3	24 x 12	CARDINAL DIRECTION		
				M6-2a (R†)	21 x 15	DIRECTIONAL ARROW		
			40-5	W20-1	36 x 36	ROAD WORK AHEAD	1 - 4 x 6	1
				W23-2	36 x 36	NEW TRAFFIC PATTERN AHEAD		

Dist	COUNTY	ROUTE	POST MILES TOTAL PROJECT	SHEET No.	TOTAL SHEETS
04	SCL	101,237	45.2/45.8, 2.7/3.3	241	736

6-13-18
REGISTERED CIVIL ENGINEER — DATE

6-20-18
PLANS APPROVAL DATE

REGISTERED PROFESSIONAL ENGINEER — STEVE LOUPE — No. 63575 — Exp. 9/30/18 — CIVIL — STATE OF CALIFORNIA

THE STATE OF CALIFORNIA OR ITS OFFICERS OR AGENTS SHALL NOT BE RESPONSIBLE FOR THE ACCURACY OR COMPLETENESS OF SCANNED COPIES OF THIS PLAN SHEET.

WMH CORPORATION
50 W San Fernando St
Suite 950
San Jose, CA 95113

VTA
3331 N First St
Building B
San Jose, Ca 95134

TRAFFIC HANDLING QUANTITIES

THQ-7

CALCULATED-DESIGNED BY			
CHECKED BY	CARLOS RODRIGUEZ	REVISED BY	SCV
	SHAWN VOGTMAN	DATE REVISED	01/15/18
CONSULTANT FUNCTIONAL SUPERVISOR	TIMOTHY J. LEE		
STATE OF CALIFORNIA - DEPARTMENT OF TRANSPORTATION			

LAST REVISION 01-15-18 | DATE PLOTTED => 6/20/2018 | TIME PLOTTED => 11:15:27 AM

X:\237_101_Mathilda\000_CAD\Sheets\MD-Traffic_Handling\MF-Quantities\0413000204mf007.dgn

BORDER LAST REVISED 7/2/2010 | USERNAME => Eilif | DGN FILE => 0413000204mf007.dgn | RELATIVE BORDER SCALE IS IN INCHES 0 1 2 3 | UNIT 0000 | PROJECT NUMBER & PHASE 0413000204

Dist	COUNTY	ROUTE	POST MILES TOTAL PROJECT	SHEET No.	TOTAL SHEETS
04	SCL	101,237	45.2/45.8, 2.7/3.3	242	736

REGISTERED CIVIL ENGINEER — 6-13-18 DATE

6-20-18
PLANS APPROVAL DATE

REGISTERED PROFESSIONAL ENGINEER — STEVE LOUPE — No. 63575 — Exp. 9/30/18 — CIVIL — STATE OF CALIFORNIA

THE STATE OF CALIFORNIA OR ITS OFFICERS OR AGENTS SHALL NOT BE RESPONSIBLE FOR THE ACCURACY OR COMPLETENESS OF SCANNED COPIES OF THIS PLAN SHEET.

WMH CORPORATION
50 W San Fernando St
Suite 950
San Jose, CA 95113

VTA
3331 N First St
Building B
San Jose, Ca 95134

CONSTRUCTION AREA SIGNS

STAGE	PHASE	SHEET No.	SIGN No.	SIGN CODE	PANEL SIZE (in x in)	SIGN MESSAGE	NUMBER AND SIZE OF POST (EA - in x in)	No. OF SIGNS
2	4	TH-41	41-1	W20-1	36 x 36	ROAD WORK AHEAD	1 - 4 x 6	1
				W23-2	36 x 36	NEW TRAFFIC PATTERN AHEAD		
				W21-5	36 x 36	SHOULDER WORK		
			41-2	R2-1 (35)	24 x 30	SPEED LIMIT	1 - 4 x 6	1
				G20-5aP	24 x 18	WORK ZONE		
				W21-5	36 x 36	SHOULDER WORK		
			41-3	W20-1	36 x 36	ROAD WORK AHEAD	1 - 4 x 6	1
				W23-2	36 x 36	NEW TRAFFIC PATTERN AHEAD		
3	1	TH-44	44-1	W20-1	36 x 36	ROAD WORK AHEAD	1 - 4 x 6	1
				W23-2	36 x 36	NEW TRAFFIC PATTERN AHEAD		
			44-2	W20-1	36 x 36	ROAD WORK AHEAD	1 - 6 x 8	1
				R2-1 (35)	24 x 30	SPEED LIMIT		
				G20-5aP	24 x 18	WORK ZONE		
				C30A (CA)	30 x 30	SHOULDER CLOSED		

TRAFFIC HANDLING PAVEMENT

SHEET No.	STAGE	STATION LIMITS				HOT MIX ASPHALT (TYPE A)	RSCB
		FROM		TO		TON	CY
SC-1	STAGE 1 - PHASE 1	"M1"	31+32.97	"M1"	52+48.52	554	570
SC-1	STAGE 1 - PHASE 1	"M1"	54+01.46	"M1"	55+92.94	45	46
SC-1	STAGE 1 - PHASE 1	"M1"	59+74.51	"M1"	60+67.38	22	22
SC-1	STAGE 1 - PHASE 1	"D5a"	8+37.18	"D5a"	8+45.84	7	7
SC-2	STAGE 1 - PHASE 2	"D4R"	106+62.58	"D4R"	106+81.34	11	11
SC-2	STAGE 1 - PHASE 2	"M1"	55+92.94	"M1"	56+49.25	23	23
SC-2	STAGE 1 - PHASE 2	"M1"	62+17.86	"M1"	64+13.94	54	56
SC-2	STAGE 1 - PHASE 2	"M1"	58+55.41	"M1"	59+63.27	38	39
SC-2	STAGE 1 - PHASE 2	"L6"	160+13.40	"L6"	160+57.45	24	25
SC-6	STAGE 2 - PHASE 2	"M1"	64+13.21	"M1"	70+95.77	358	368
TOTAL						1136	1167

* QUANTITIES ARE SHOWN FOR REFERENCE PURPOSES ONLY AND HAVE BEEN INTEGRATED INTO THE ROADWAY SUMMARY QUANTITIES

TRAFFIC HANDLING QUANTITIES

THQ-8

REVISED BY	DATE REVISED
SCV	01/15/18

CALCULATED-DESIGNED BY: CARLOS RODRIGUEZ
CHECKED BY: SHAWN VOGTMAN

CONSULTANT FUNCTIONAL SUPERVISOR: TIMOTHY J. LEE

STATE OF CALIFORNIA - DEPARTMENT OF TRANSPORTATION
Caltrans

X:\237_101_Mathilde\000_CAD\Sheets\MD-Traffic_Handling\MF-Quantities\0413000204mf008.dgn

LAST REVISION: 01-15-18
DATE PLOTTED => 6/20/2018
TIME PLOTTED => 11:15:31 AM

BORDER LAST REVISED 7/2/2010 | USERNAME => Eilif | DGN FILE => 0413000204mf008.dgn | RELATIVE BORDER SCALE IS IN INCHES 0 1 2 3 | UNIT 0000 | PROJECT NUMBER & PHASE 0413000204

Dist	COUNTY	ROUTE	POST MILES TOTAL PROJECT	SHEET No.	TOTAL SHEETS
04	SCL	101,237	45.2/45.8, 2.7/3.3	243	736

REGISTERED CIVIL ENGINEER — DATE: 6-13-18

STEVE LOUPE — No. 63575 — Exp. 9/30/20 — CIVIL — REGISTERED PROFESSIONAL ENGINEER — STATE OF CALIFORNIA

PLANS APPROVAL DATE: 6-20-18

THE STATE OF CALIFORNIA OR ITS OFFICERS OR AGENTS SHALL NOT BE RESPONSIBLE FOR THE ACCURACY OR COMPLETENESS OF SCANNED COPIES OF THIS PLAN SHEET.

WMH CORPORATION 50 W San Fernando St Suite 950 San Jose, CA 95113	VTA 3331 N First St Building B San Jose, Ca 95134

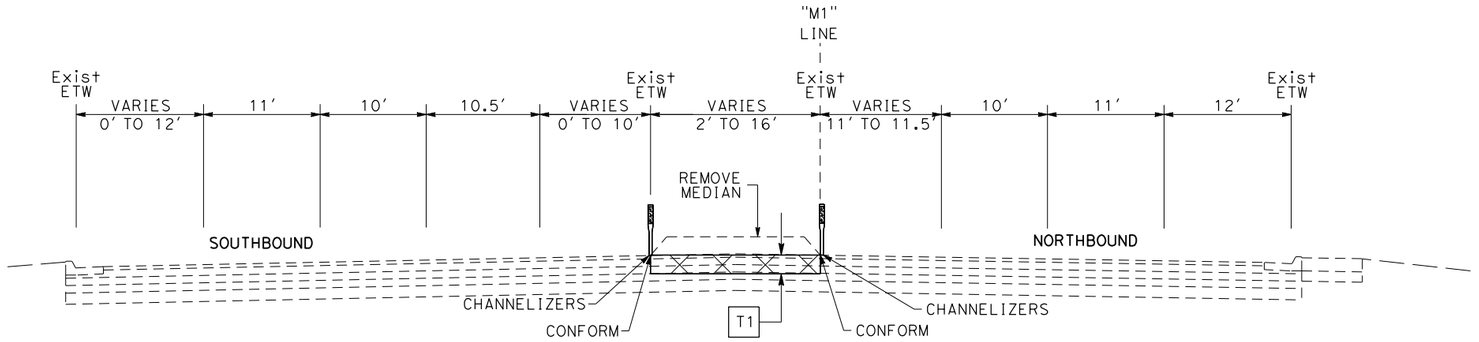

MATHILDA AVENUE

"M1" Sta 31+32.97 TO 52+48.52

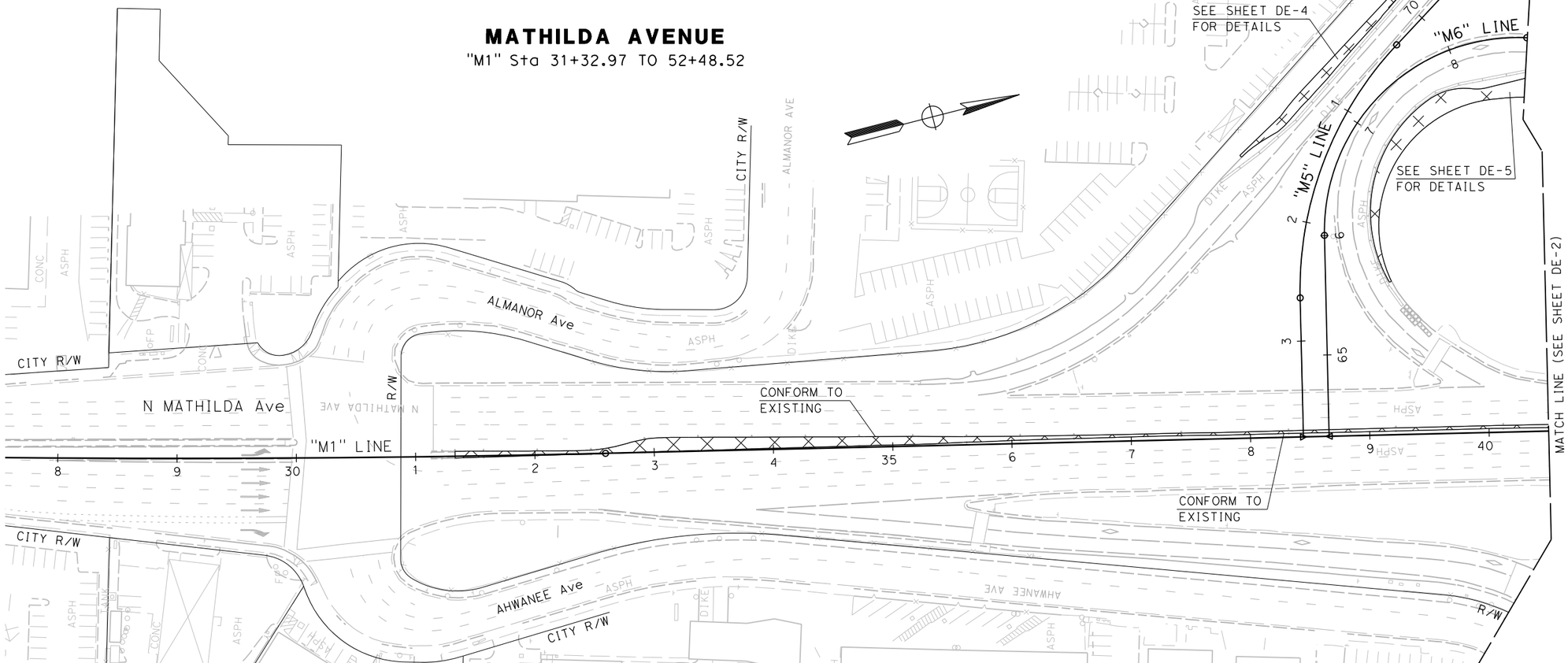

NOTES:

1. FOR ACCURATE RIGHT OF WAY DATA, CONTACT RIGHT OF WAY ENGINEERING AT THE DISTRICT OFFICE.
2. FOR DIKE AND SIDEWALK REMOVAL, SEE CONSTRUCTION DETAILS.
3. SEE CONSTRUCTION AREA SIGNS SHEETS FOR STAGE CONSTRUCTION TRAFFIC DETOURS AND SIGNING.
4. SEE STAGE CONSTRUCTION SHEETS FOR REMOVAL INFORMATION.

LEGEND:

- TEMPORARY PAVEMENT
- REMOVE MEDIAN AND PLACE PAVEMENT

ABBREVIATIONS:

RHMA-G	RUBBERIZED HOT MIX ASPHALT, GAP-GRADED
SEG	SUBGRADE EHANCEMENT GEOTEXTILE (CLASS BI)
RSCB	RAPID STRENGTH CONCRETE BASE

APPROVED FOR DETOUR CONSTRUCTION WORK ONLY

DETOUR CONSTRUCTION PAVEMENT STRUCTURE SECTION:

T1 *	0.60' HMA (TYPE A) 1.25' RSCB	SEE NOTE 4 FOR REMOVAL (Typ)
T2	1.0' HMA	SEE NOTE 4 FOR REMOVAL (Typ)
T3	2.5' HMA	SEE NOTE 4 FOR REMOVAL (Typ)
T4	Var 0' TO 0.5' HMA	SEE NOTE 4 FOR REMOVAL (Typ)
T5 *	1.50' HMA (TYPE A) 0.33 CI2 AB SEG	

* PERMANENT PAVEMENT

DETOUR PLAN (STAGE 1 - PHASE 1)

SCALE: 1" = 50'

DE-1

CALCULATED-DESIGNED BY	NOOR ALZIREENI	REVISED BY	SCV
CHECKED BY	SHAWN VOGTMAN	DATE REVISED	01/05/18
CONSULTANT FUNCTIONAL SUPERVISOR	TIMOTHY J. LEE		

STATE OF CALIFORNIA - DEPARTMENT OF TRANSPORTATION — Caltrans

LAST REVISION | DATE PLOTTED => 12/3/2018 | 01-15-18 | TIME PLOTTED => 12:23:18 PM

X:\237_101_Mathilda\000_CAD\Sheets\000_Submittals\Conformed Plans\0413000204mg001.dgn

BORDER LAST REVISED 7/2/2010 | USERNAME => eilif | DGN FILE => 0413000204mg001.dgn | RELATIVE BORDER SCALE IS IN INCHES 0 1 2 3 | UNIT 0000 | PROJECT NUMBER & PHASE 0413000204

Dist	COUNTY	ROUTE	POST MILES TOTAL PROJECT	SHEET No.	TOTAL SHEETS
04	SCL	101,237	45.2/45.8, 2.7/3.3	244	736

REGISTERED CIVIL ENGINEER — DATE: 6-13-18

PLANS APPROVAL DATE: 6-20-18

STEVE LOUPE No. 63575 Exp. 9/30/18 CIVIL — REGISTERED PROFESSIONAL ENGINEER — STATE OF CALIFORNIA

THE STATE OF CALIFORNIA OR ITS OFFICERS OR AGENTS SHALL NOT BE RESPONSIBLE FOR THE ACCURACY OR COMPLETENESS OF SCANNED COPIES OF THIS PLAN SHEET.

WMH CORPORATION
50 W San Fernando St
Suite 950
San Jose, CA 95113

VTA
3331 N First St
Building B
San Jose, Ca 95134

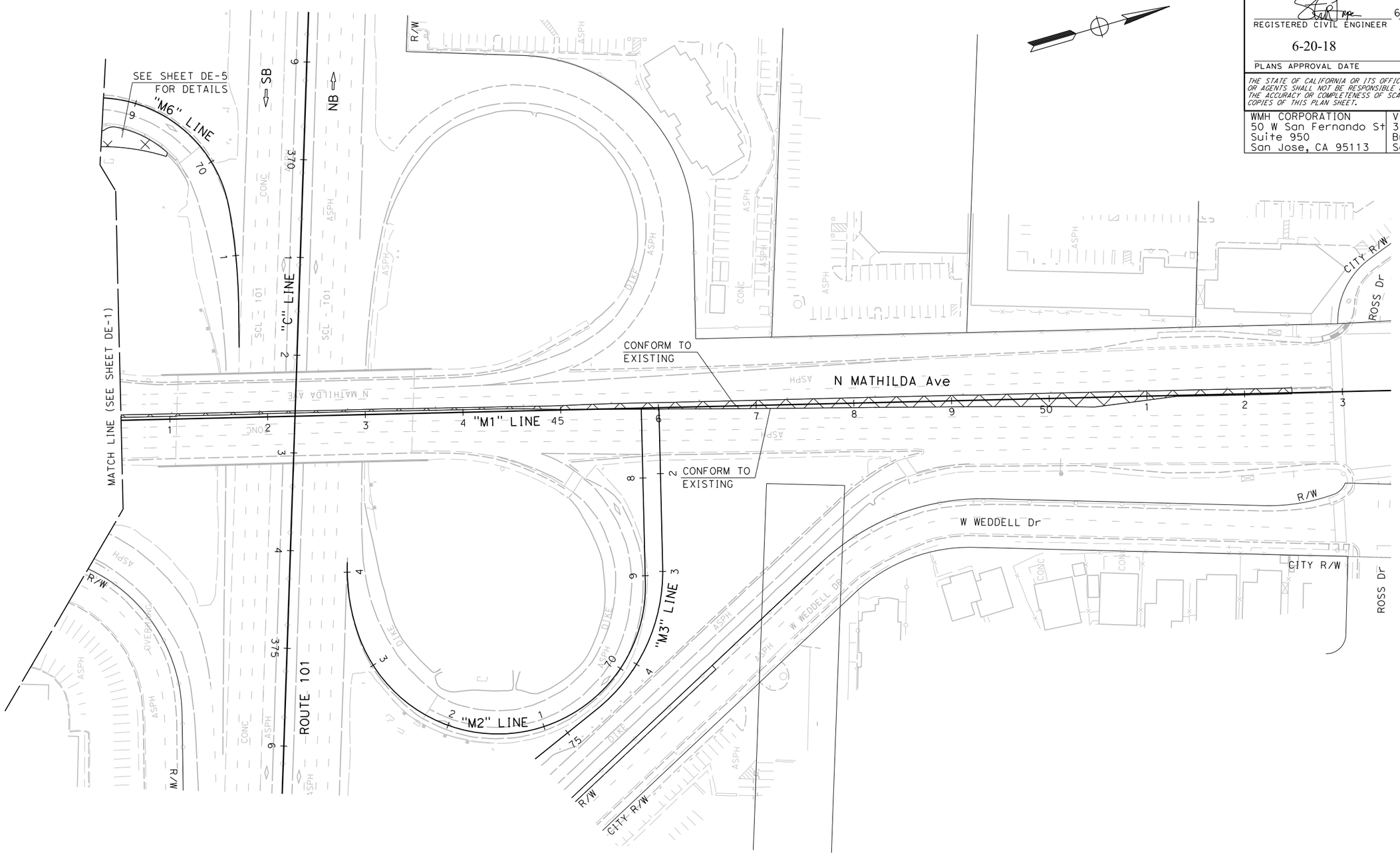

FOR NOTES AND LEGEND, SEE SHEET DE-1

APPROVED FOR DETOUR CONSTRUCTION WORK ONLY

DETOUR PLAN
(STAGE 1 - PHASE 1)

SCALE: 1" = 50'

DE-2

STATE OF CALIFORNIA - DEPARTMENT OF TRANSPORTATION

CONSULTANT FUNCTIONAL SUPERVISOR: TIMOTHY J. LEE

CALCULATED-DESIGNED BY: NOOR ALZIREENI

CHECKED BY: SHAWN VOGTMAN

REVISED BY	DATE REVISED
SCV	01/05/18

LAST REVISION: DATE PLOTTED => 6/20/2018, TIME PLOTTED => 11:16:11 AM

X:\237_101_Mathilda\000_CAD\Sheets\MG-Detour\MG-Plans\0413000204mg002.dgn

BORDER LAST REVISED 7/2/2010 | USERNAME => Eilif, DGN FILE => 0413000204mg002.dgn | RELATIVE BORDER SCALE IS IN INCHES 0 1 2 3 | UNIT 0000 | PROJECT NUMBER & PHASE 0413000204

Dist	COUNTY	ROUTE	POST MILES TOTAL PROJECT	SHEET No.	TOTAL SHEETS
04	SCL	101,237	45.2/45.8, 2.7/3.3	245	736

REGISTERED CIVIL ENGINEER 6-13-18 DATE

6-20-18
PLANS APPROVAL DATE

REGISTERED PROFESSIONAL ENGINEER STEVE LOUPE No. 63575 Exp. 9/30/18 CIVIL STATE OF CALIFORNIA

THE STATE OF CALIFORNIA OR ITS OFFICERS OR AGENTS SHALL NOT BE RESPONSIBLE FOR THE ACCURACY OR COMPLETENESS OF SCANNED COPIES OF THIS PLAN SHEET.

WMH CORPORATION
50 W San Fernando St
Suite 950
San Jose, CA 95113

VTA
3331 N First St
Building B
San Jose, Ca 95134

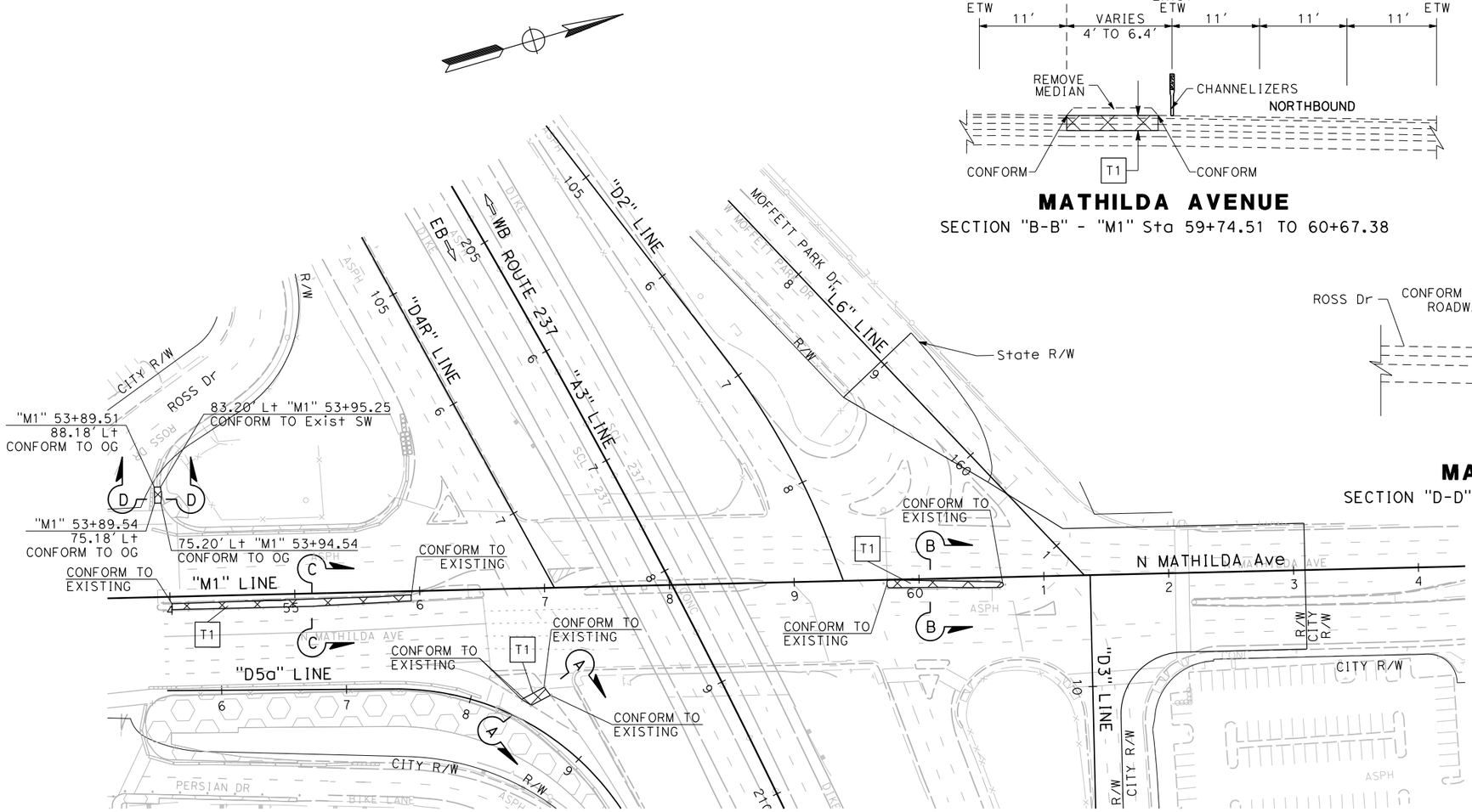

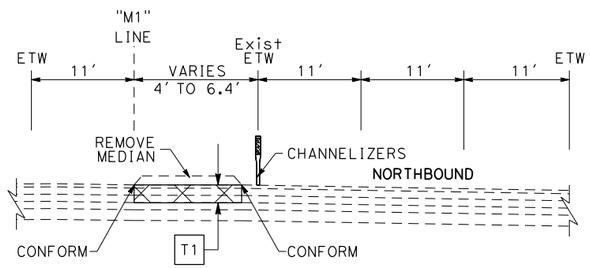

MATHILDA AVENUE
SECTION "B-B" - "M1" Sta 59+74.51 TO 60+67.38

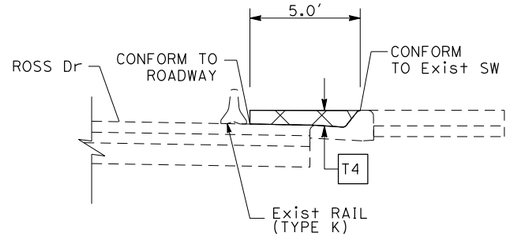

MATHILDA AVENUE
SECTION "D-D" - "B1" Sta 53+89.54 TO 53+94.54

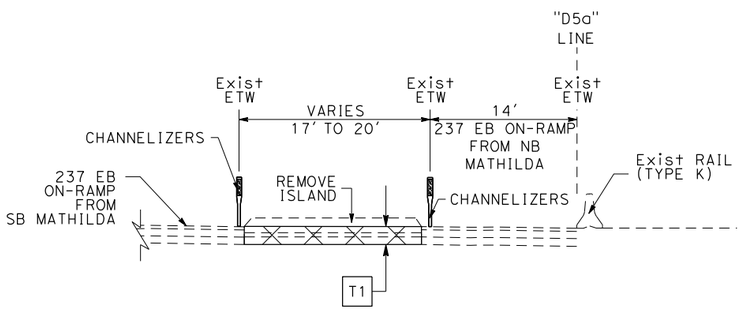

US 237 EB ON-RAMP
SECTION "A-A" - "D5a" Sta 8+37.18 TO 8+45.84

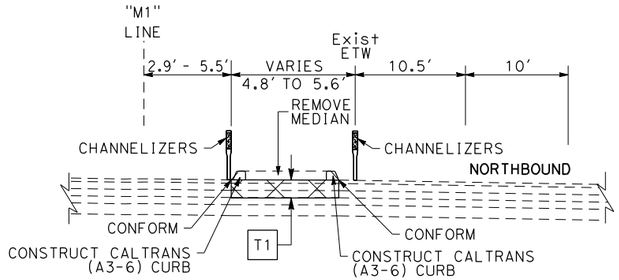

MATHILDA AVENUE
SECTION "C-C" - "M1" Sta 54+01.46 TO 54+92.94

FOR NOTES AND LEGEND, SEE SHEET DE-1

APPROVED FOR DETOUR CONSTRUCTION WORK ONLY

DETOUR PLAN
(STAGE 1 - PHASE 1)
SCALE: 1" = 50'

DE-3

STATE OF CALIFORNIA - DEPARTMENT OF TRANSPORTATION
Caltrans

CONSULTANT FUNCTIONAL SUPERVISOR: TIMOTHY J. LEE
CALCULATED-DESIGNED BY: NOOR ALZIREENI
CHECKED BY: SHAWN VOGTMAN
REVISED BY: SCV
DATE REVISED: 01/05/18

X:\237_101_Mathilda\000_CAD\Sheets\MG-Detour\MG-Plans\0413000204mg003.dgn

LAST REVISION 01-15-18
DATE PLOTTED => 6/20/2018
TIME PLOTTED => 11:16:14 AM

Dist	COUNTY	ROUTE	POST MILES TOTAL PROJECT	SHEET No.	TOTAL SHEETS
04	SCL	101,237	45.2/45.8, 2.7/3.3	246	736

REGISTERED CIVIL ENGINEER — DATE 6-13-18

PLANS APPROVAL DATE 6-20-18

REGISTERED PROFESSIONAL ENGINEER — STEVE LOUPE — No. 63575 — Exp. 9/30/18 — CIVIL — STATE OF CALIFORNIA

THE STATE OF CALIFORNIA OR ITS OFFICERS OR AGENTS SHALL NOT BE RESPONSIBLE FOR THE ACCURACY OR COMPLETENESS OF SCANNED COPIES OF THIS PLAN SHEET.

WMH CORPORATION 50 W San Fernando St Suite 950 San Jose, CA 95113	VTA 3331 N First St Building B San Jose, Ca 95134

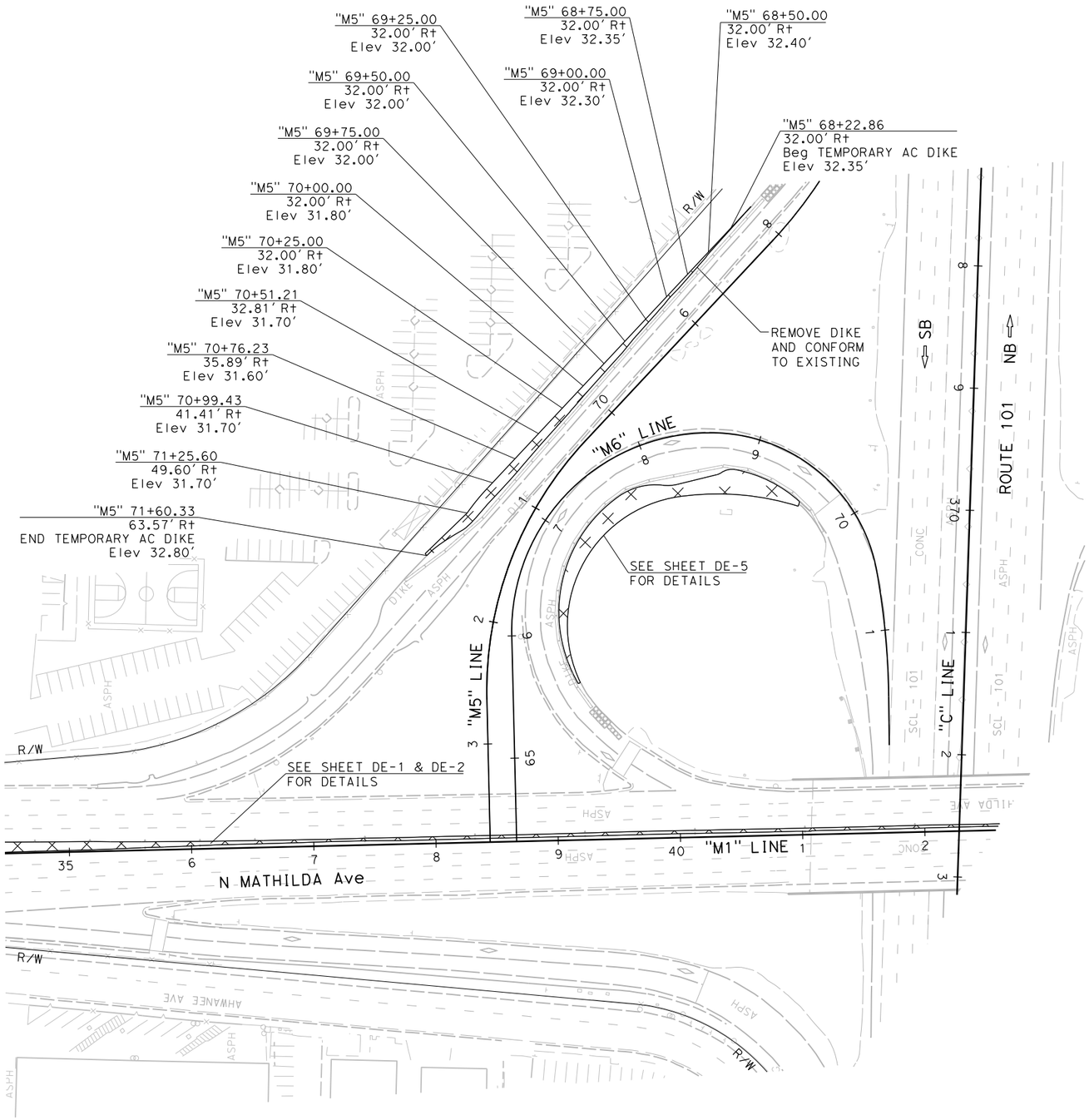

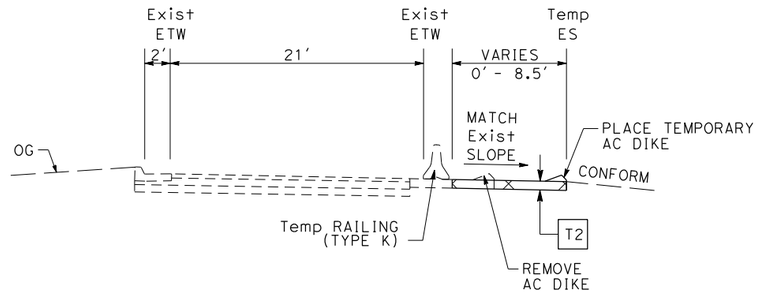

US 101 SB OFF-RAMP

"M5" Sta 67+98.33 TO 71+64.50

FOR NOTES AND LEGEND, SEE SHEET DE-1

APPROVED FOR DETOUR CONSTRUCTION WORK ONLY

DETOUR PLAN
(STAGE 1 - PHASE 1)

SCALE: 1" = 50'

DE-4

STATE OF CALIFORNIA - DEPARTMENT OF TRANSPORTATION — Caltrans®

CONSULTANT FUNCTIONAL SUPERVISOR: TIMOTHY J. LEE

CALCULATED-DESIGNED BY: NOOR ALZIREENI
CHECKED BY: SHAWN VOGTMAN
REVISED BY: SCV
DATE REVISED: 01/05/18

LAST REVISION: DATE PLOTTED => 6/20/2018
01-15-18 TIME PLOTTED => 11:16:18 AM

X:\237_101_Mathilde\000_CAD\Sheets\MG-Detour\MG-Plans\0413000204mg004.dgn

BORDER LAST REVISED 7/2/2010 | USERNAME => Eilif | DGN FILE => 0413000204mg004.dgn | RELATIVE BORDER SCALE IS IN INCHES 0 1 2 3 | UNIT 0000 | PROJECT NUMBER & PHASE 0413000204

Dist	COUNTY	ROUTE	POST MILES TOTAL PROJECT	SHEET No.	TOTAL SHEETS
04	SCL	101,237	45.2/45.8, 2.7/3.3	247	736

REGISTERED CIVIL ENGINEER — 6-13-18 DATE

6-20-18
PLANS APPROVAL DATE

STEVE LOUPE No. 63575 Exp. 9/30/18 CIVIL — REGISTERED PROFESSIONAL ENGINEER — STATE OF CALIFORNIA

THE STATE OF CALIFORNIA OR ITS OFFICERS OR AGENTS SHALL NOT BE RESPONSIBLE FOR THE ACCURACY OR COMPLETENESS OF SCANNED COPIES OF THIS PLAN SHEET.

WMH CORPORATION
50 W San Fernando St
Suite 950
San Jose, CA 95113

VTA
3331 N First St
Building B
San Jose, Ca 95134

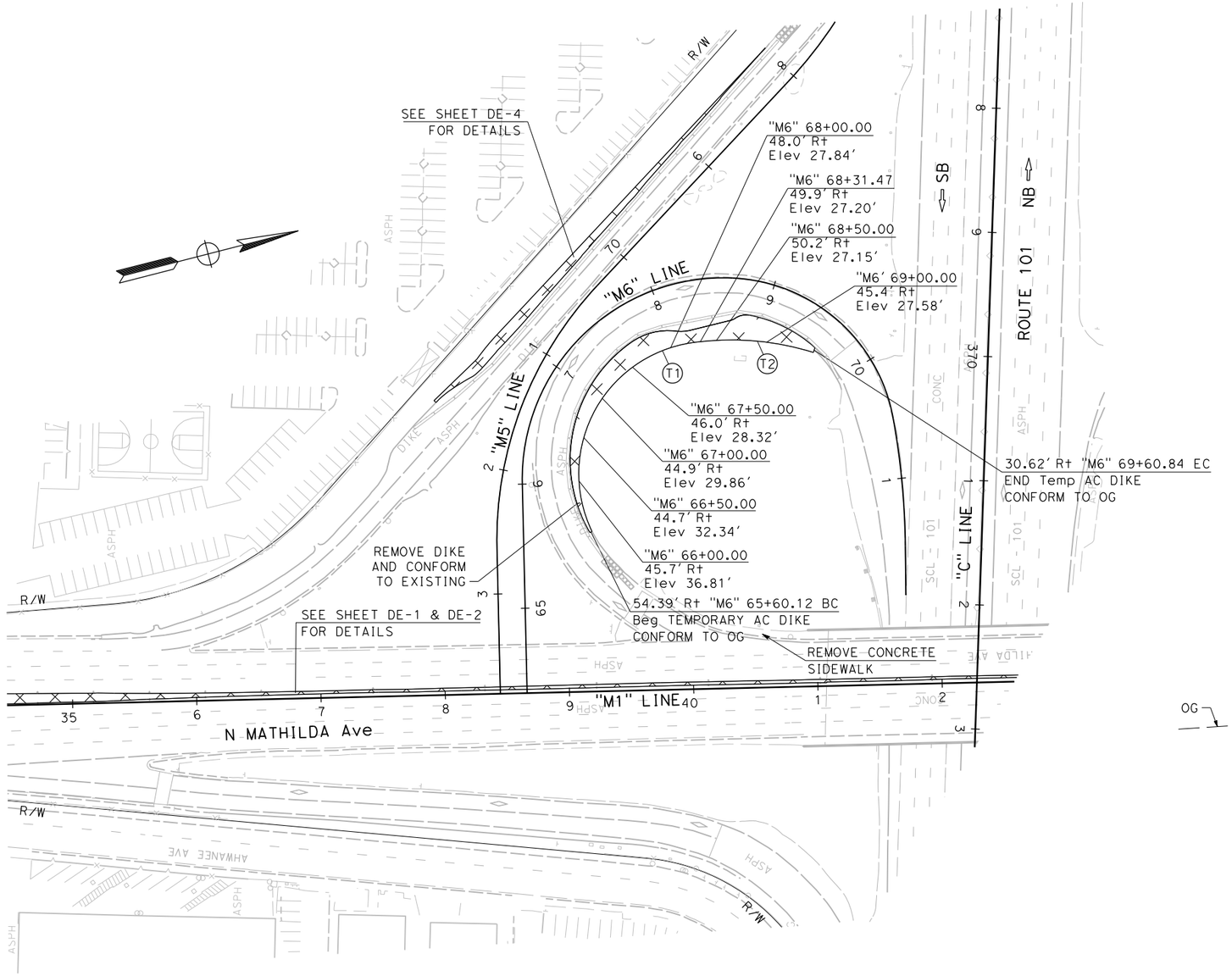

CURVE DATA

No.	R	Δ	T	L
T1	106.62′	111°6′51.6"	155.47′	206.76′
T2	218.60′	24°7′36.6"	46.72′	92.05′

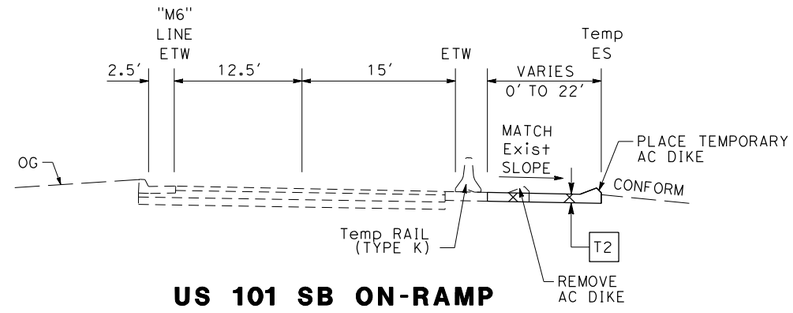

US 101 SB ON-RAMP

"M6" Sta 65+59.72 TO 69+61.86

FOR NOTES AND LEGEND,
SEE SHEET DE-1

APPROVED FOR DETOUR CONSTRUCTION WORK ONLY

DETOUR PLAN
(STAGE 1 - PHASE 1)

SCALE: 1" = 50′

DE-5

CALCULATED-DESIGNED BY			
CHECKED BY	NOOR ALZIREENI	REVISED BY	SCV
	SHAWN VOGTMAN	DATE REVISED	01/05/18

STATE OF CALIFORNIA - DEPARTMENT OF TRANSPORTATION
Caltrans
CONSULTANT FUNCTIONAL SUPERVISOR
TIMOTHY J. LEE

X:\237_101_Mathilda\000_CAD\Sheets\MG-Detour\MG-Plans\0413000204mg005.dgn

LAST REVISION 01-15-18
DATE PLOTTED => 6/20/2018
TIME PLOTTED => 11:16:22 AM

BORDER LAST REVISED 7/2/2010 | USERNAME => Eilif | DGN FILE => 0413000204mg005.dgn | RELATIVE BORDER SCALE IS IN INCHES 0 1 2 3 | UNIT 0000 | PROJECT NUMBER & PHASE 0413000204

Dist	COUNTY	ROUTE	POST MILES TOTAL PROJECT	SHEET No.	TOTAL SHEETS
04	SCL	101,237	45.2/45.8, 2.7/3.3	248	736

6-13-18
REGISTERED CIVIL ENGINEER DATE

6-20-18
PLANS APPROVAL DATE

REGISTERED PROFESSIONAL ENGINEER
STEVE LOUPE
No. 63575
Exp. 9/30/18
CIVIL
STATE OF CALIFORNIA

THE STATE OF CALIFORNIA OR ITS OFFICERS OR AGENTS SHALL NOT BE RESPONSIBLE FOR THE ACCURACY OR COMPLETENESS OF SCANNED COPIES OF THIS PLAN SHEET.

WMH CORPORATION
50 W San Fernando St
Suite 950
San Jose, CA 95113

VTA
3331 N First St
Building B
San Jose, Ca 95134

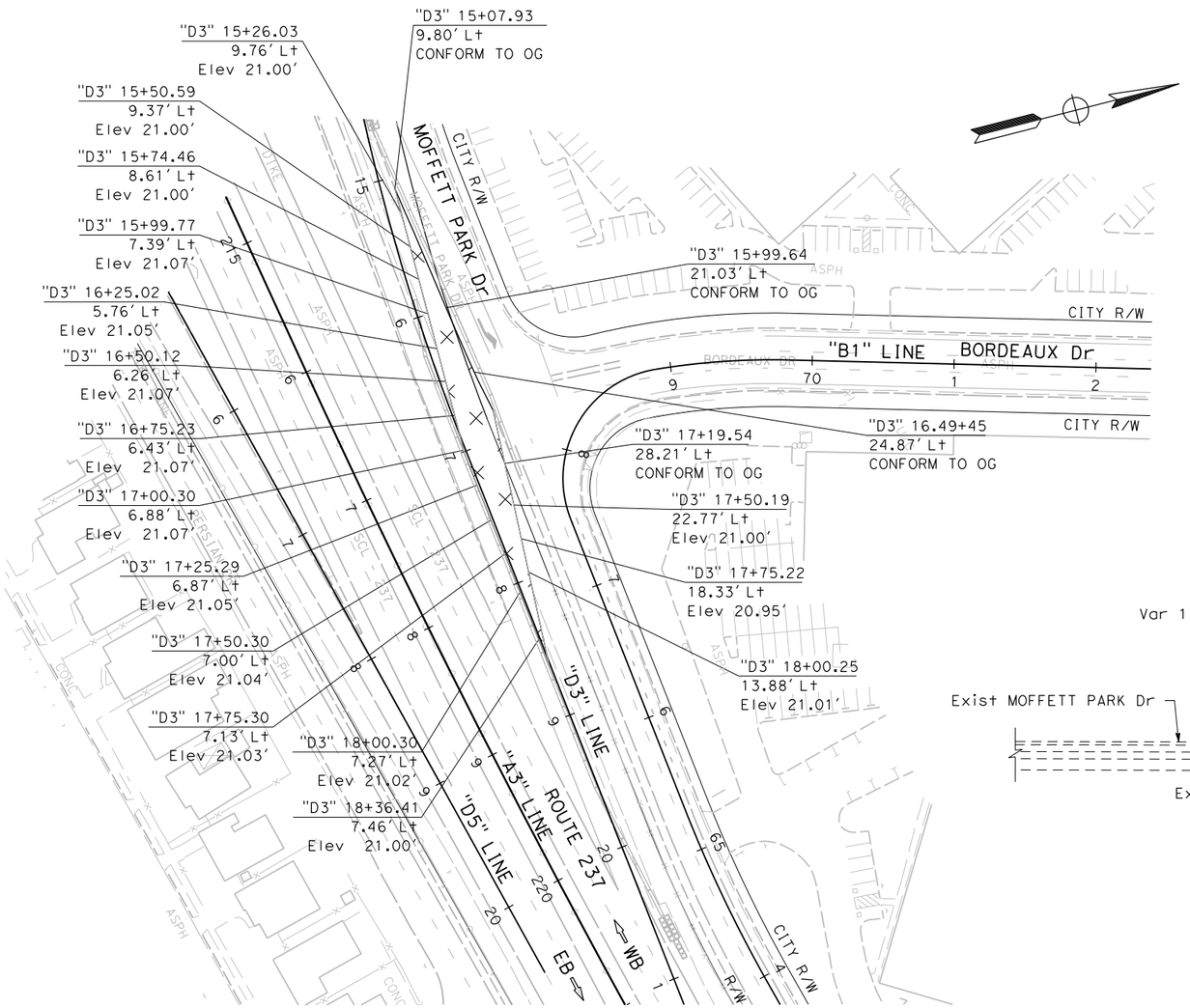

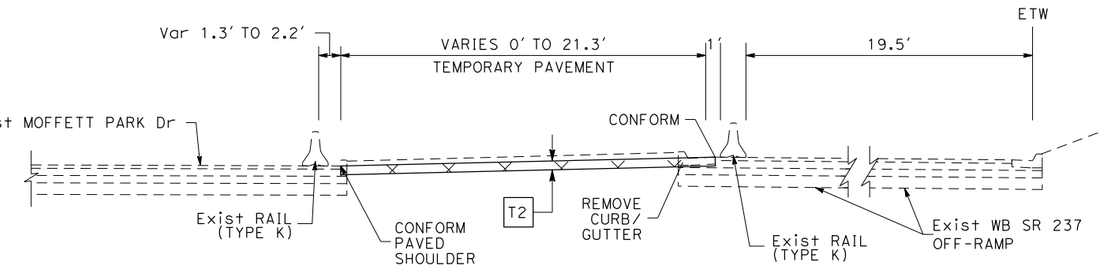

WB SR 237 OFF-RAMP TO MATHILDA Ave

"D3" Sta 15+07.93 TO 18+63.73

FOR NOTES AND LEGEND, SEE SHEET DE-1

APPROVED FOR DETOUR CONSTRUCTION WORK ONLY

DETOUR PLAN
(STAGE 1 - PHASE 1)

SCALE: 1" = 50'

DE-6

REVISED BY	DATE REVISED
SCV	01/05/18

CALCULATED-DESIGNED BY: NOOR ALZIREENI
CHECKED BY: SHAWN VOGTMAN
CONSULTANT FUNCTIONAL SUPERVISOR: TIMOTHY J. LEE

STATE OF CALIFORNIA - DEPARTMENT OF TRANSPORTATION
Caltrans

LAST REVISION 01-15-18
DATE PLOTTED => 6/20/2018
TIME PLOTTED => 11:16:26 AM

X:\237_101_Mathilda\000_CAD\Sheets\MG-Detour\MG-Plans\0413000204mg006.dgn

BORDER LAST REVISED 7/2/2010 | USERNAME => Eilif | DGN FILE => 0413000204mg006.dgn | RELATIVE BORDER SCALE IS IN INCHES 0 1 2 3 | UNIT 0000 | PROJECT NUMBER & PHASE 0413000204

Dist	COUNTY	ROUTE	POST MILES TOTAL PROJECT	SHEET No.	TOTAL SHEETS
04	SCL	101,237	45.2/45.8, 2.7/3.3	249	736

REGISTERED CIVIL ENGINEER 6-13-18 DATE

6-20-18
PLANS APPROVAL DATE

REGISTERED PROFESSIONAL ENGINEER STEVE LOUPE No. 63575 Exp. 9/30/18 CIVIL STATE OF CALIFORNIA

THE STATE OF CALIFORNIA OR ITS OFFICERS OR AGENTS SHALL NOT BE RESPONSIBLE FOR THE ACCURACY OR COMPLETENESS OF SCANNED COPIES OF THIS PLAN SHEET.

WMH CORPORATION
50 W San Fernando St
Suite 950
San Jose, CA 95113

VTA
3331 N First St
Building B
San Jose, Ca 95134

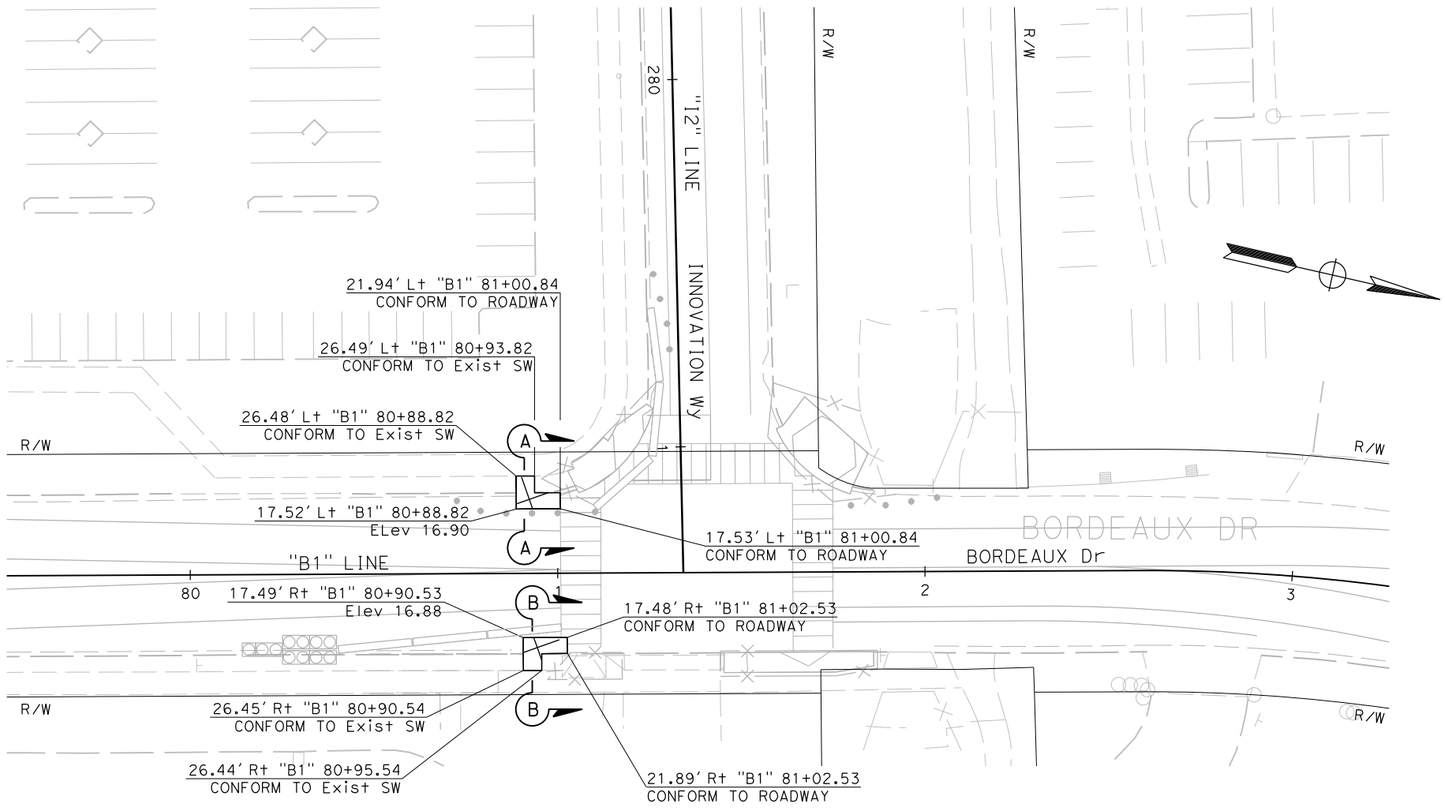

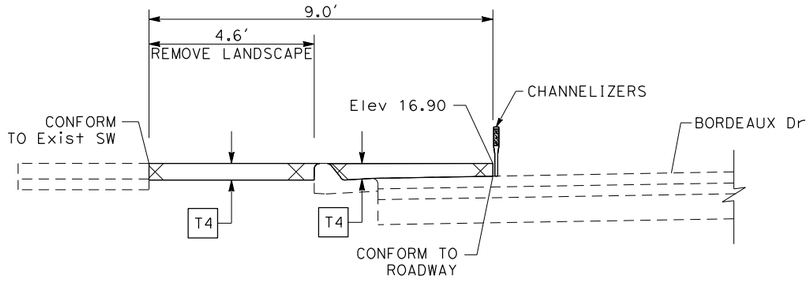

BORDEAUX Dr
SECTION "A-A" - "B1" Sta 80+88.83 TO 81+00.84

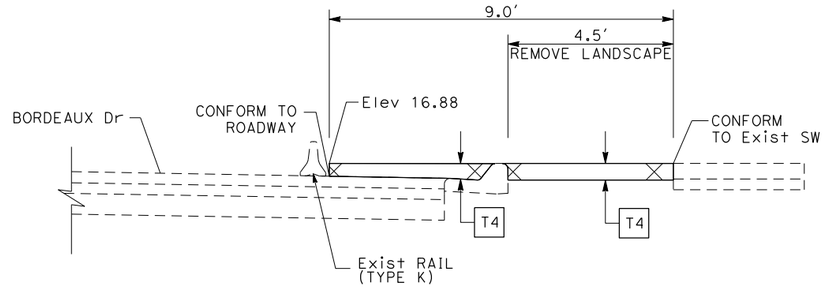

BORDEAUX Dr
SECTION "B-B" - "B1" Sta 80+90.53 TO 81+02.53

FOR NOTES AND LEGEND, SEE SHEET DE-1

APPROVED FOR DETOUR CONSTRUCTION WORK ONLY

DETOUR PLAN
(STAGE 1 - PHASE 1)
SCALE: 1" = 20'

DE-7

STATE OF CALIFORNIA - DEPARTMENT OF TRANSPORTATION
Caltrans
CONSULTANT FUNCTIONAL SUPERVISOR: TIMOTHY J. LEE
CALCULATED-DESIGNED BY: NOOR ALZIREENI
CHECKED BY: SHAWN VOGTMAN
REVISED BY: SCV
DATE REVISED: 01/05/18

X:\237_101_Mathilda\000_CAD\Sheets\MG-Detour\MG-Plans\0413000204mg007.dgn

LAST REVISION 01-15-18
DATE PLOTTED => 6/20/2018
TIME PLOTTED => 11:16:30 AM

Dist	COUNTY	ROUTE	POST MILES TOTAL PROJECT	SHEET No.	TOTAL SHEETS
04	SCL	101,237	45.2/45.8, 2.7/3.3	250	736

REGISTERED CIVIL ENGINEER — DATE: 6-13-18

PLANS APPROVAL DATE: 6-20-18

STEVE LOUPE No. 63575 Exp. 9/30/18 CIVIL — REGISTERED PROFESSIONAL ENGINEER — STATE OF CALIFORNIA

THE STATE OF CALIFORNIA OR ITS OFFICERS OR AGENTS SHALL NOT BE RESPONSIBLE FOR THE ACCURACY OR COMPLETENESS OF SCANNED COPIES OF THIS PLAN SHEET.

WMH CORPORATION 50 W San Fernando St Suite 950 San Jose, CA 95113	VTA 3331 N First St Building B San Jose, Ca 95134

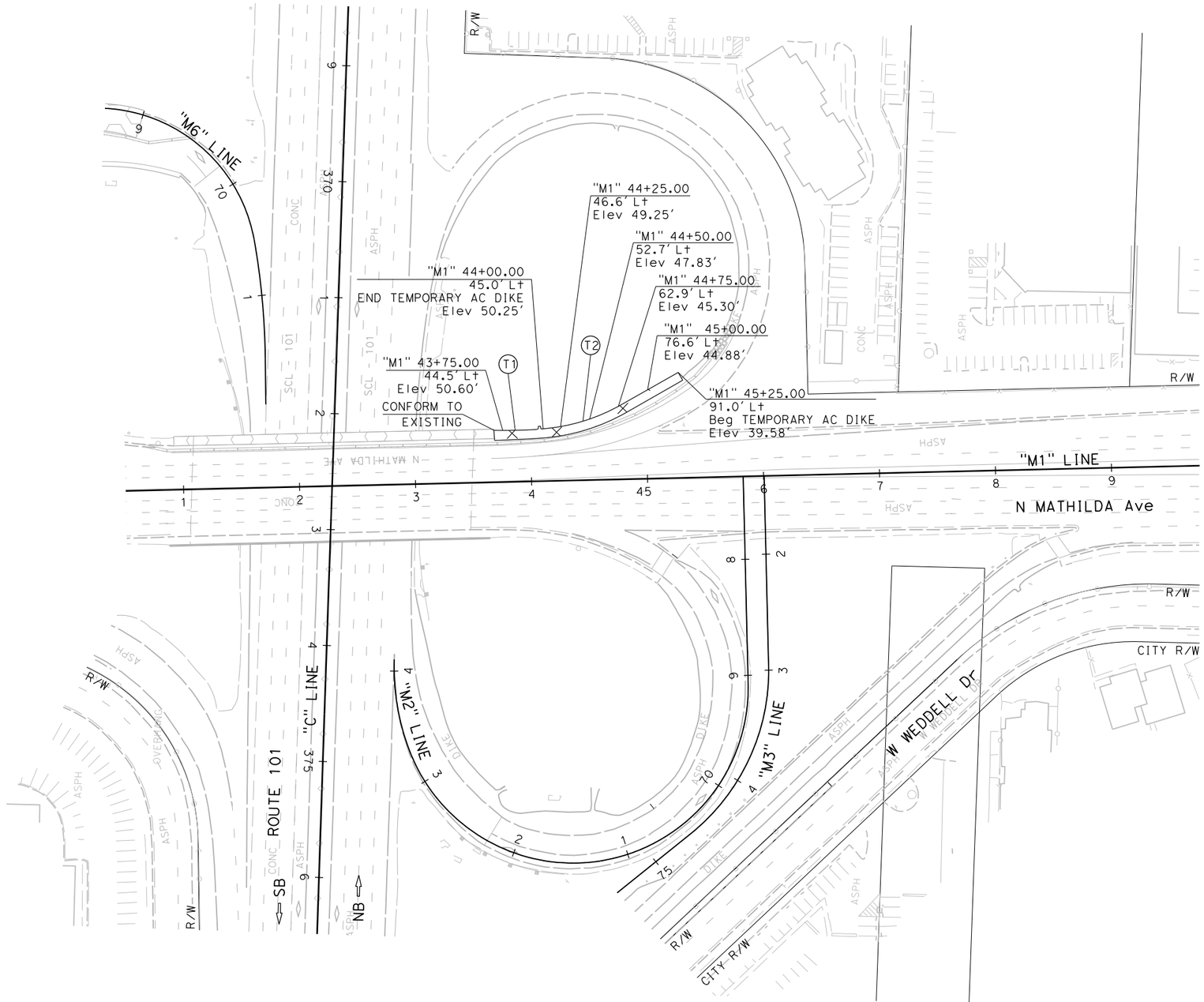

CURVE DATA

No.	R	Δ	T	L
T1	445.00′	4°43′03.9"	18.36′	36.64′
T2	162.75′	25°58′22.4"	37.53′	73.78′

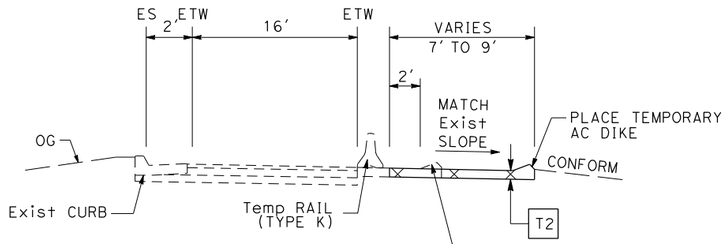

US 101 NB OFF-RAMP

"M1" Sta 43+69.00 TO 45+32.31

FOR NOTES AND LEGEND, SEE SHEET DE-1

APPROVED FOR DETOUR CONSTRUCTION WORK ONLY

DETOUR PLAN
(STAGE 1 - PHASE 2)

SCALE: 1" = 50′

DE-8

REVISED BY	DATE REVISED
SCV	01/05/18

CALCULATED-DESIGNED BY: NOOR ALZIREENI
CHECKED BY: SHAWN VOGTMAN

STATE OF CALIFORNIA - DEPARTMENT OF TRANSPORTATION
Caltrans®

CONSULTANT FUNCTIONAL SUPERVISOR: TIMOTHY J. LEE

X:\237_101_Mathilda\000_CAD\Sheets\MG-Detour\MG-Plans\0413000204mg008.dgn

LAST REVISION: DATE PLOTTED => 6/20/2018, TIME PLOTTED => 11:16:38 AM

BORDER LAST REVISED 7/2/2010 | USERNAME => Eilif, DGN FILE => 0413000204mg008.dgn | RELATIVE BORDER SCALE IS IN INCHES 0 1 2 3 | UNIT 0000 | PROJECT NUMBER & PHASE 0413000204

Dist	COUNTY	ROUTE	POST MILES TOTAL PROJECT	SHEET No.	TOTAL SHEETS
04	SCL	101,237	45.2/45.8, 2.7/3.3	251	736

REGISTERED CIVIL ENGINEER 6-13-18 DATE

6-20-18
PLANS APPROVAL DATE

REGISTERED PROFESSIONAL ENGINEER STEVE LOUPE No. 63575 Exp. 9/30/18 CIVIL STATE OF CALIFORNIA

THE STATE OF CALIFORNIA OR ITS OFFICERS OR AGENTS SHALL NOT BE RESPONSIBLE FOR THE ACCURACY OR COMPLETENESS OF SCANNED COPIES OF THIS PLAN SHEET.

WMH CORPORATION
50 W San Fernando St
Suite 950
San Jose, CA 95113

VTA
3331 N First St
Building B
San Jose, Ca 95134

CURVE DATA

No.	R	Δ	T	L
T1	365.00′	16°43′30.7″	53.66′	106.55′

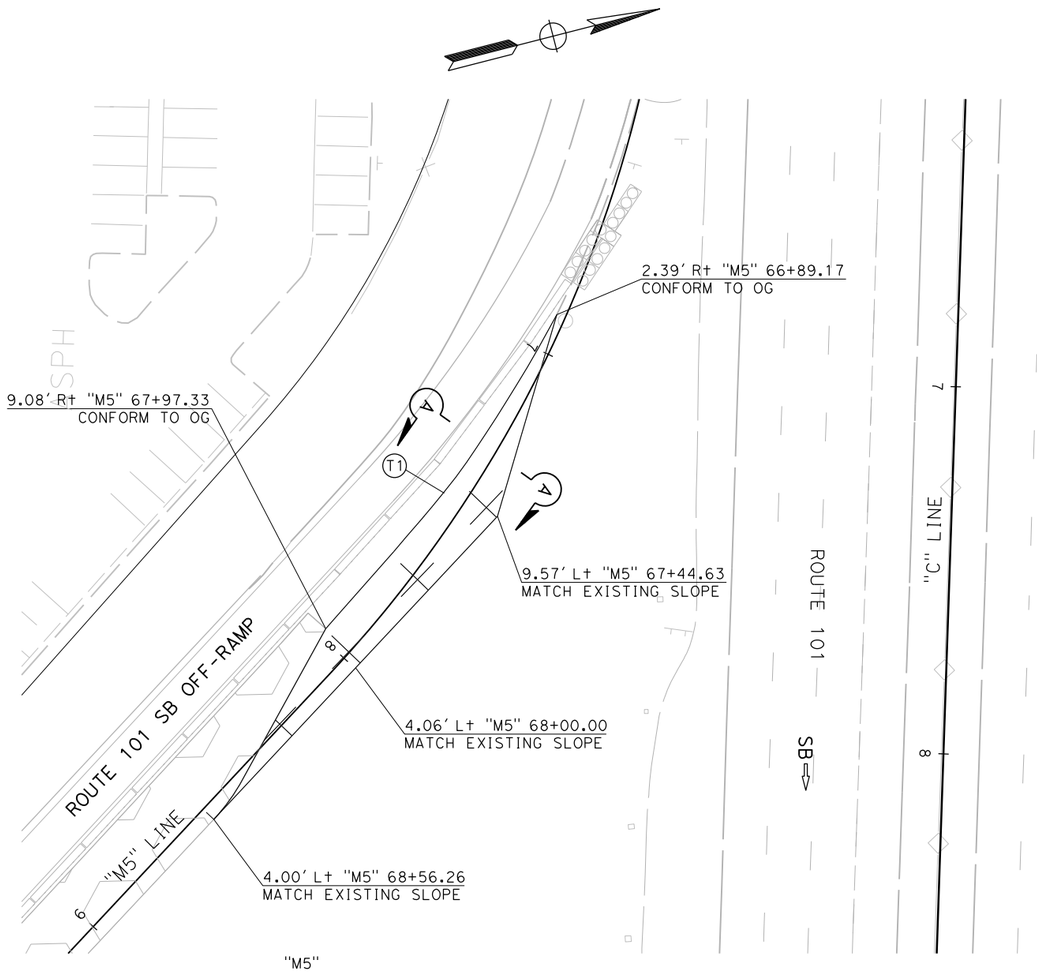

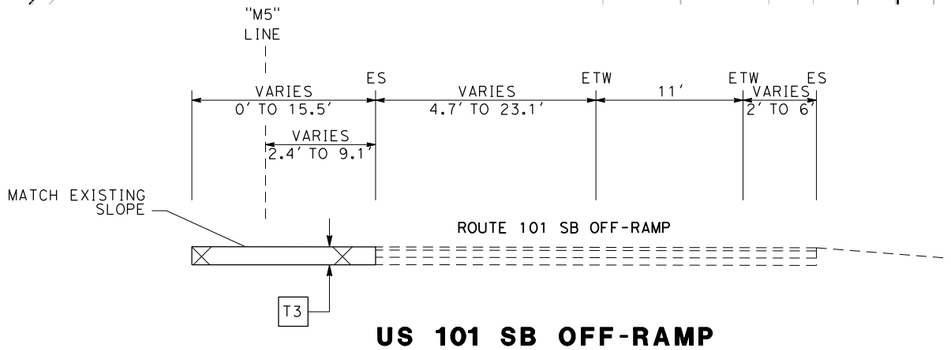

US 101 SB OFF-RAMP
SECTION "A-A" - "M5" Sta 66+89.17 TO 69+56.25

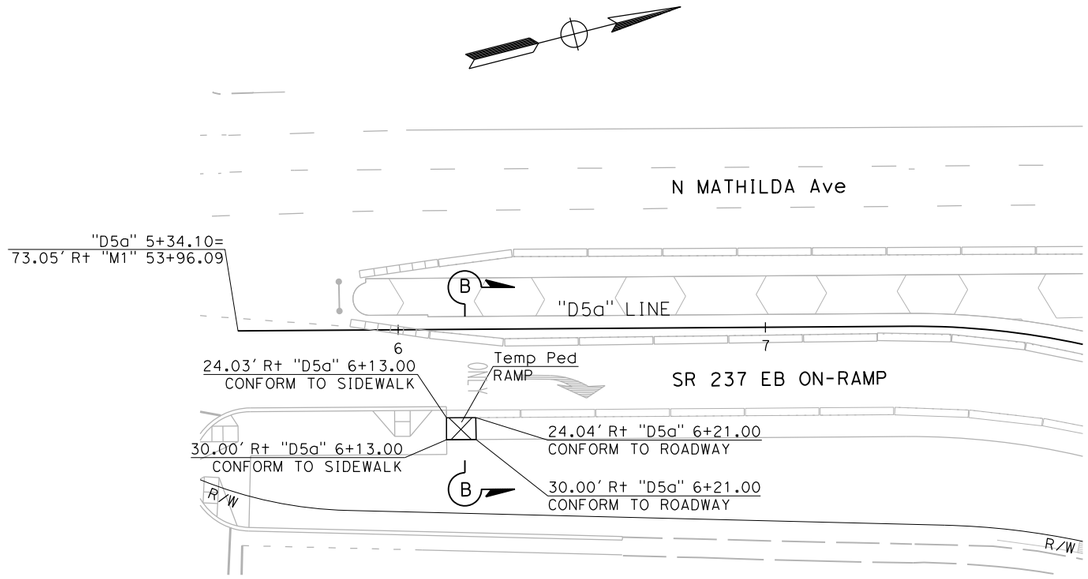

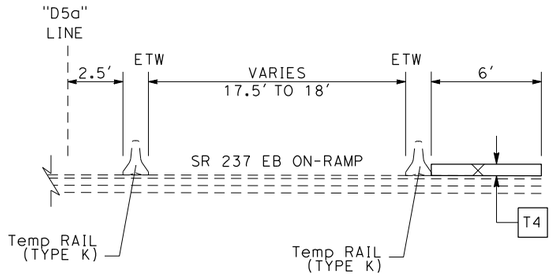

ROUTE 237 EB ON-RAMP
SECTION "B-B" - "D5a" Sta 6+13.00 TO 6+21.00

FOR NOTES AND LEGEND, SEE SHEET DE-1

APPROVED FOR DETOUR CONSTRUCTION WORK ONLY

DETOUR PLAN
(STAGE 1 - PHASE 2)
SCALE: 1" = 20′

DE-9

STATE OF CALIFORNIA - DEPARTMENT OF TRANSPORTATION
Caltrans
CONSULTANT FUNCTIONAL SUPERVISOR: TIMOTHY J. LEE
CALCULATED-DESIGNED BY: NOOR ALZIREENI
CHECKED BY: SHAWN VOGTMAN
REVISED BY: SCV
DATE REVISED: 01/05/18

X:\237_101_Mathilda\000_CAD\Sheets\MG-Detour\MG-Plans\0413000204mg009.dgn

LAST REVISION 01-15-18
DATE PLOTTED => 6/20/2018
TIME PLOTTED => 11:16:42 AM

Dist	COUNTY	ROUTE	POST MILES TOTAL PROJECT	SHEET No.	TOTAL SHEETS
04	SCL	101,237	45.2/45.8, 2.7/3.3	252	736

REGISTERED CIVIL ENGINEER — 6-13-18 DATE

PLANS APPROVAL DATE — 6-20-18

REGISTERED PROFESSIONAL ENGINEER — STEVE LOUPE — No. 63575 — Exp. 9/30/20 — CIVIL — STATE OF CALIFORNIA

THE STATE OF CALIFORNIA OR ITS OFFICERS OR AGENTS SHALL NOT BE RESPONSIBLE FOR THE ACCURACY OR COMPLETENESS OF SCANNED COPIES OF THIS PLAN SHEET.

WMH CORPORATION
50 W San Fernando St
Suite 950
San Jose, CA 95113

VTA
3331 N First St
Building B
San Jose, Ca 95134

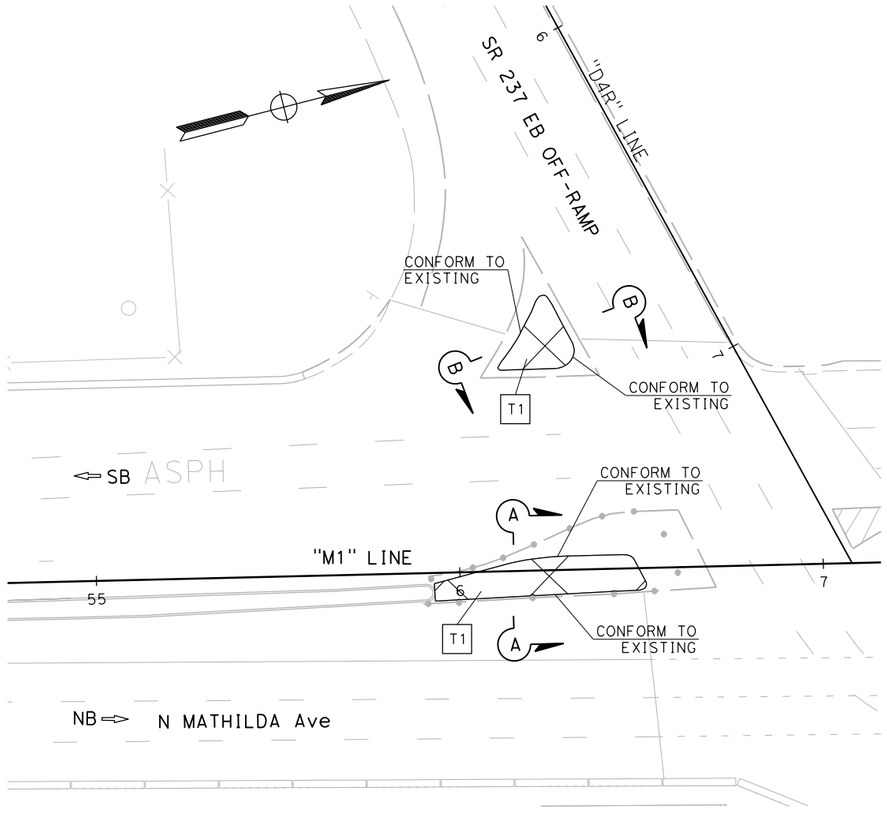

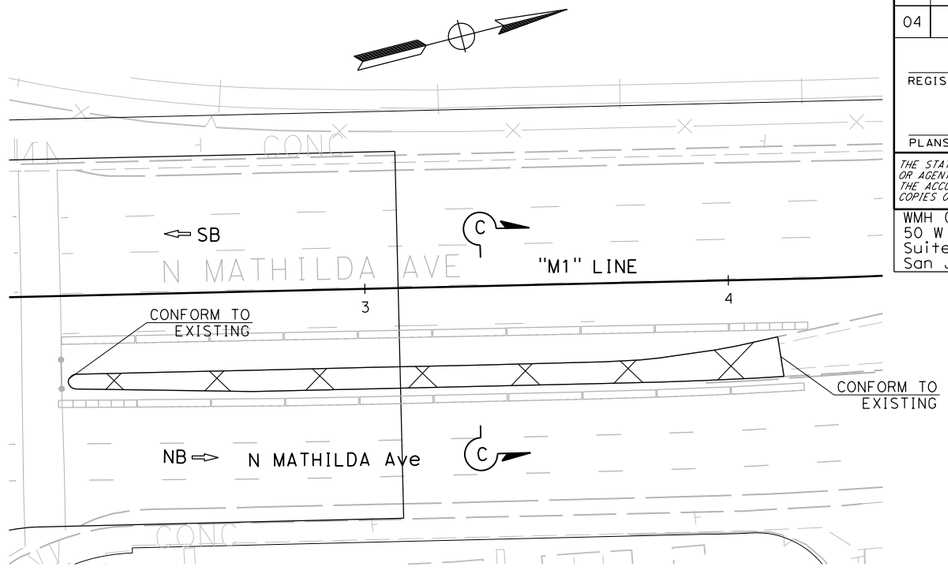

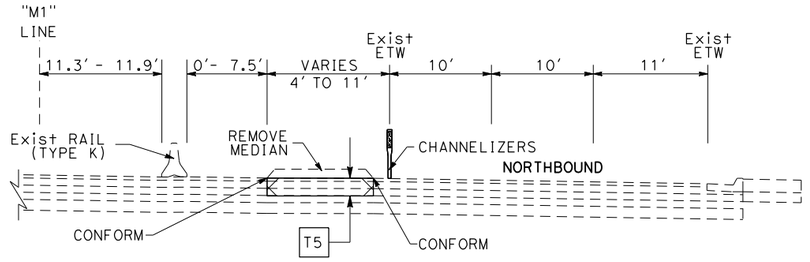

MATHILDA AVENUE
SECTION "C-C" - "M1" Sta 62+17.86 TO 64+13.94

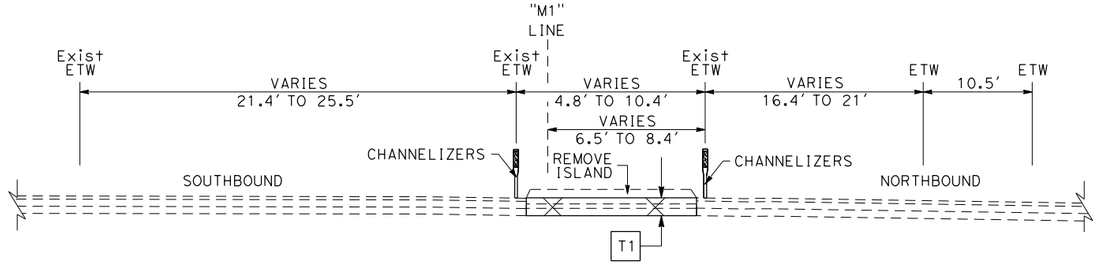

MATHILDA AVENUE
SECTION "A-A" - "M1" Sta 55+92.94 TO 56+49.25

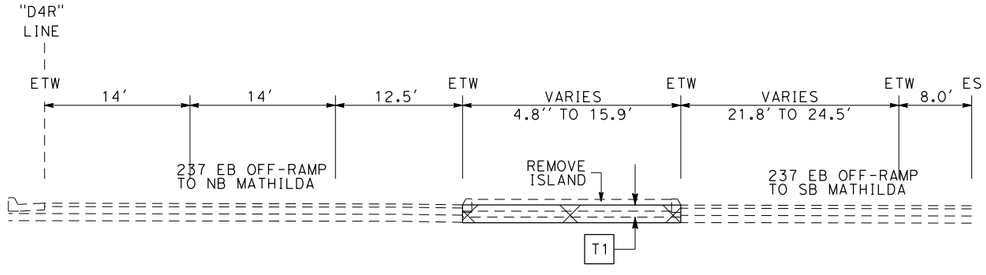

MATHILDA AVENUE
SECTION "B-B" - "D4R" Sta 106+62.58 TO 106+81.34

FOR NOTES AND LEGEND, SEE SHEET DE-1

APPROVED FOR DETOUR CONSTRUCTION WORK ONLY

DETOUR PLAN
(STAGE 1 - PHASE 2)

SCALE: 1" = 20'

DE-10

CALCULATED-DESIGNED BY	CHECKED BY	REVISED BY	DATE REVISED
NOOR ALZIREENI	SHAWN VOGTMAN	SCV	01/05/18

STATE OF CALIFORNIA - DEPARTMENT OF TRANSPORTATION
CONSULTANT FUNCTIONAL SUPERVISOR: TIMOTHY J. LEE

X:\237_101_Mathilda\000_CAD\Sheets\000_Submittals\Conformed Plans\0413000204mg010.dgn

LAST REVISION: DATE PLOTTED => 12/3/2018
01-15-18 TIME PLOTTED => 12:21:58 PM

BORDER LAST REVISED 7/2/2010 | USERNAME => eilif | DGN FILE => 0413000204mg010.dgn | RELATIVE BORDER SCALE IS IN INCHES 0 1 2 3 | UNIT 0000 | PROJECT NUMBER & PHASE 0413000204

Dist	COUNTY	ROUTE	POST MILES TOTAL PROJECT	SHEET No.	TOTAL SHEETS
04	SCL	101,237	45.2/45.8, 2.7/3.3	253	736

REGISTERED CIVIL ENGINEER — 6-13-18 DATE

6-20-18
PLANS APPROVAL DATE

STEVE LOUPE No. 63575 Exp. 9/30/18 CIVIL — REGISTERED PROFESSIONAL ENGINEER — STATE OF CALIFORNIA

THE STATE OF CALIFORNIA OR ITS OFFICERS OR AGENTS SHALL NOT BE RESPONSIBLE FOR THE ACCURACY OR COMPLETENESS OF SCANNED COPIES OF THIS PLAN SHEET.

WMH CORPORATION
50 W San Fernando St
Suite 950
San Jose, CA 95113

VTA
3331 N First St
Building B
San Jose, Ca 95134

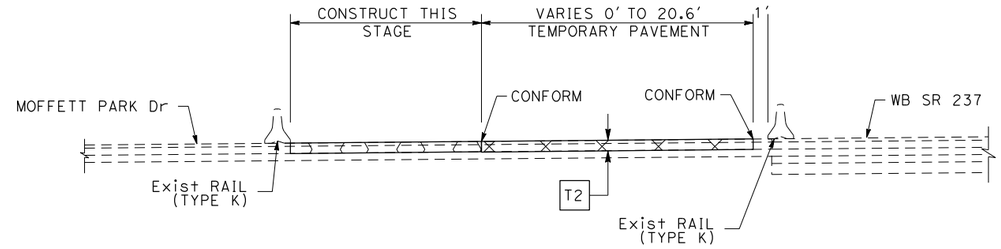

WB SR 237 OFF-RAMP TO MATHILDA Ave

"D3" Sta 11+55.34 TO 18+22.23

CURVE DATA

No.	R	Δ	T	L
T1	1850.00′	8°07′36.9"	131.42′	262.41′
T2	1550.00′	3°12′8.8"	43.33′	86.63′
T3	1264.28′	16°39′51.4"	185.16′	367.71′

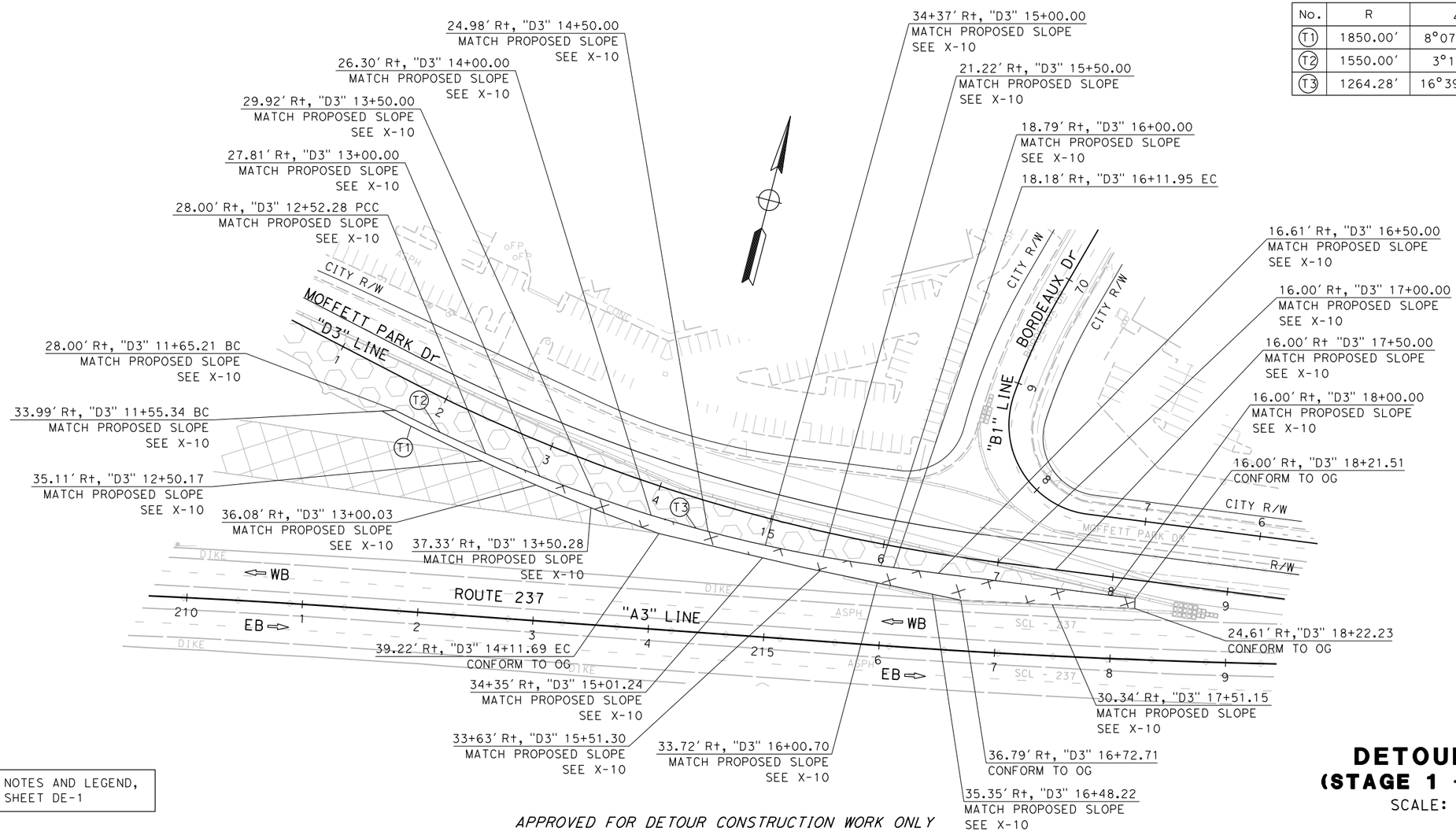

FOR NOTES AND LEGEND, SEE SHEET DE-1

APPROVED FOR DETOUR CONSTRUCTION WORK ONLY

DETOUR PLAN (STAGE 1 - PHASE 2)

SCALE: 1" = 50′

DE-11

	REVISED BY	DATE REVISED
	SCV	01/05/18

CALCULATED-DESIGNED BY: NOOR ALZIREENI
CHECKED BY: SHAWN VOGTMAN
CONSULTANT FUNCTIONAL SUPERVISOR: TIMOTHY J. LEE

STATE OF CALIFORNIA - DEPARTMENT OF TRANSPORTATION
Caltrans

X:\237_101_Mathilda\000_CAD\Sheets\MG-Detour\MG-Plans\0413000204mg011.dgn

LAST REVISION — DATE PLOTTED => 6/20/2018 — TIME PLOTTED => 11:16:52 AM 01-15-18

BORDER LAST REVISED 7/2/2010 | USERNAME => Eilif | DGN FILE => 0413000204mg011.dgn | RELATIVE BORDER SCALE IS IN INCHES 0 1 2 3 | UNIT 0000 | PROJECT NUMBER & PHASE 0413000204

Dist	COUNTY	ROUTE	POST MILES TOTAL PROJECT	SHEET No.	TOTAL SHEETS
04	SCL	101,237	45.2/45.8, 2.7/3.3	254	736

REGISTERED CIVIL ENGINEER — 6-13-18 DATE

6-20-18
PLANS APPROVAL DATE

REGISTERED PROFESSIONAL ENGINEER — STEVE LOUPE — No. 63575 — Exp. 9/30/18 — CIVIL — STATE OF CALIFORNIA

THE STATE OF CALIFORNIA OR ITS OFFICERS OR AGENTS SHALL NOT BE RESPONSIBLE FOR THE ACCURACY OR COMPLETENESS OF SCANNED COPIES OF THIS PLAN SHEET.

WMH CORPORATION 50 W San Fernando St Suite 950 San Jose, CA 95113	VTA 3331 N First St Building B San Jose, Ca 95134

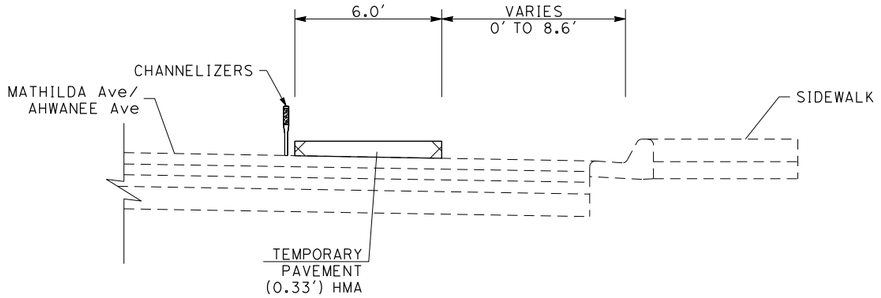

MATHILDA AVENUE

SECTION "A-A" - "M1" Sta 28+76.10 TO 29+90.49
SECTION "B-B" - "M1" Sta 30+13.31 TO 30+29.33

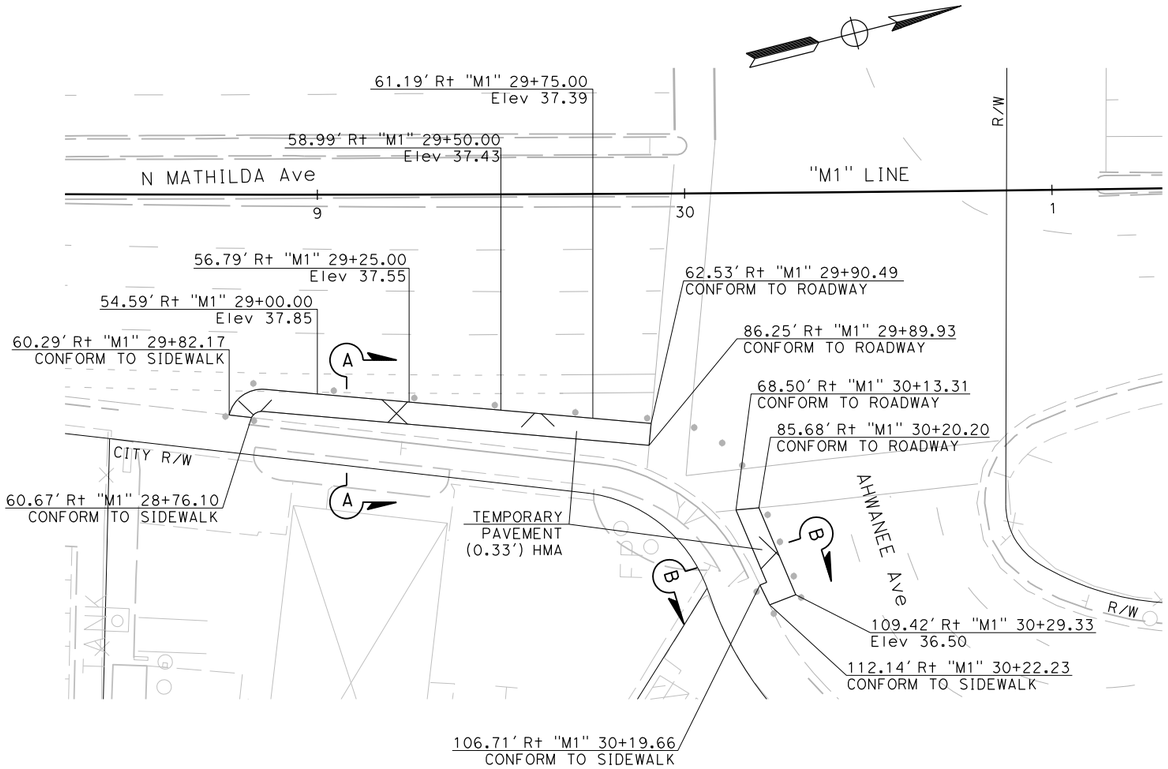

FOR NOTES AND LEGEND, SEE SHEET DE-1

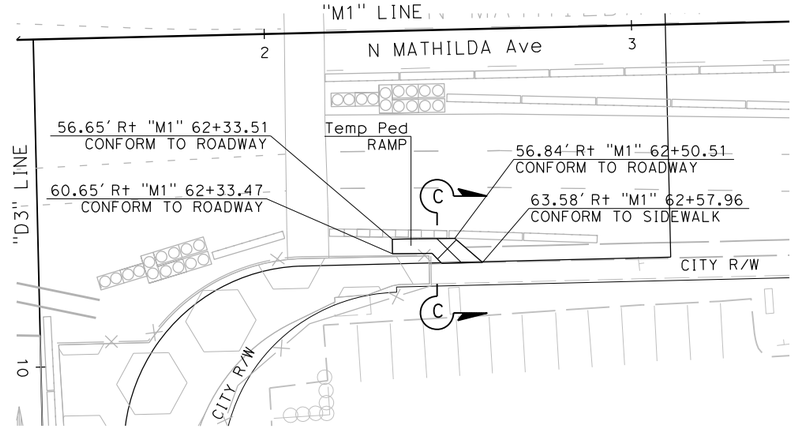

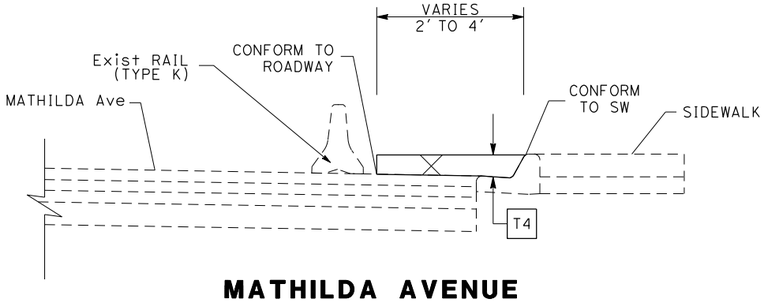

MATHILDA AVENUE

SECTION "C-C" - "M1" Sta 62+23.07 TO 62+49.59

DETOUR PLAN
(STAGE 1 - PHASE 3)

SCALE: 1" = 20'

DE-12

APPROVED FOR DETOUR CONSTRUCTION WORK ONLY

REVISED BY	DATE REVISED
SCV	01/05/18

CALCULATED-DESIGNED BY: NOOR ALZIREENI
CHECKED BY: SHAWN VOGTMAN
CONSULTANT FUNCTIONAL SUPERVISOR: TIMOTHY J. LEE
STATE OF CALIFORNIA - DEPARTMENT OF TRANSPORTATION
Caltrans

LAST REVISION: 01-15-18
DATE PLOTTED => 6/20/2018
TIME PLOTTED => 11:16:57 AM

X:\237_101_Mathilda\000_CAD\Sheets\MG-Detour\MG-Plans\0413000204mg012.dgn

Dist	COUNTY	ROUTE	POST MILES TOTAL PROJECT	SHEET No.	TOTAL SHEETS
04	SCL	101,237	45.2/45.8, 2.7/3.3	255	736

REGISTERED CIVIL ENGINEER 6-13-18 DATE

6-20-18
PLANS APPROVAL DATE

REGISTERED PROFESSIONAL ENGINEER STEVE LOUPE No. 63575 Exp. 9/30/18 CIVIL STATE OF CALIFORNIA

THE STATE OF CALIFORNIA OR ITS OFFICERS OR AGENTS SHALL NOT BE RESPONSIBLE FOR THE ACCURACY OR COMPLETENESS OF SCANNED COPIES OF THIS PLAN SHEET.

WMH CORPORATION
50 W San Fernando St
Suite 950
San Jose, CA 95113

VTA
3331 N First St
Building B
San Jose, Ca 95134

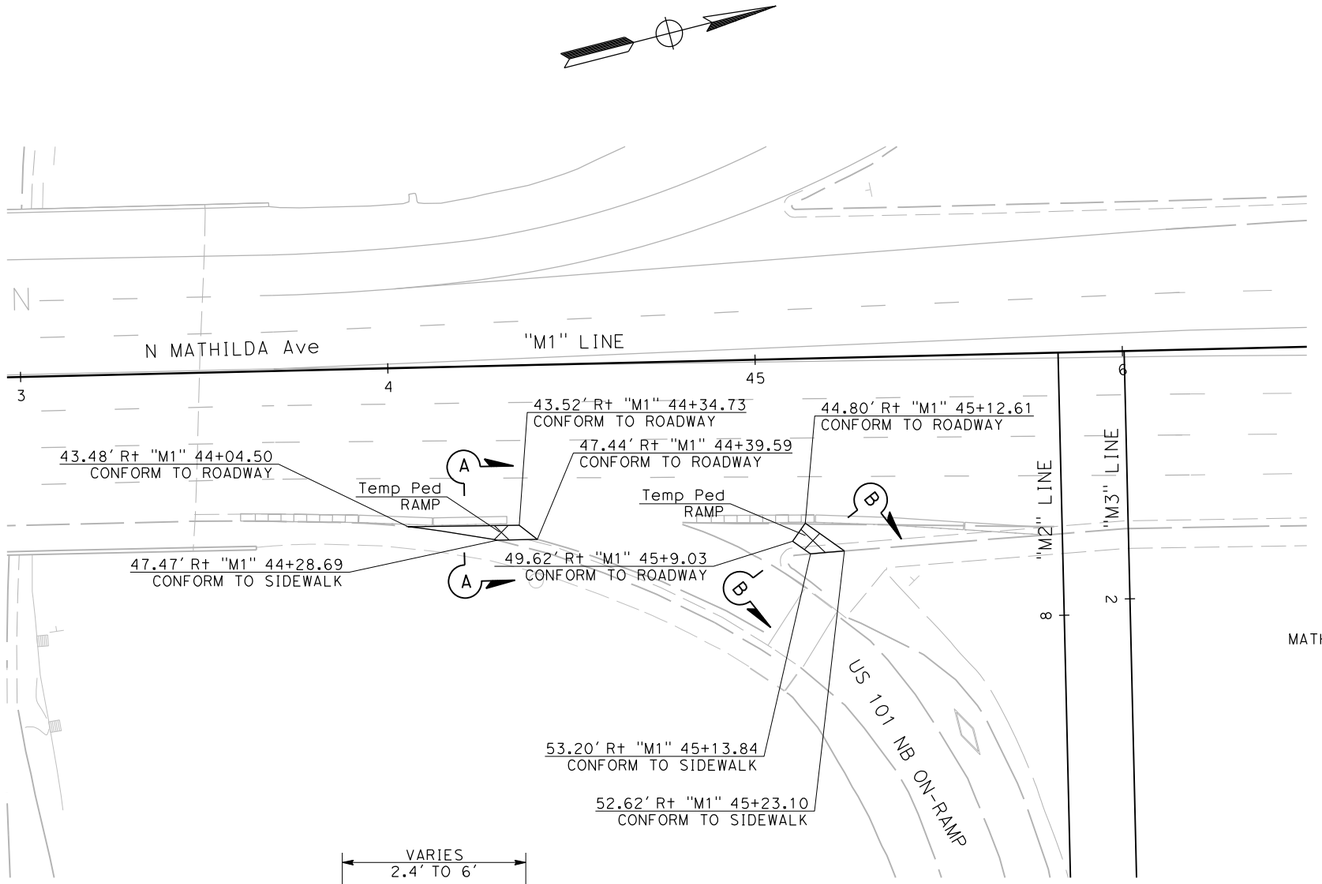

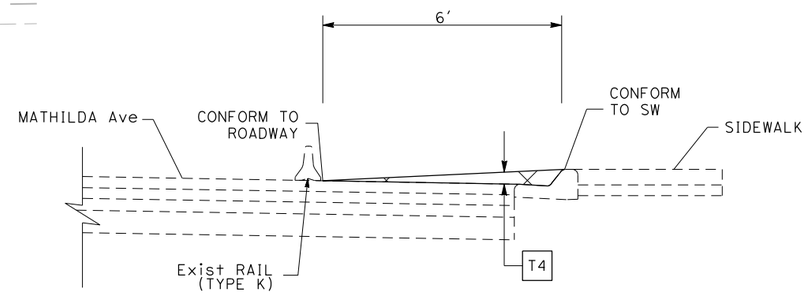

MATHILDA AVENUE
SECTION "B-B" - "M1" Sta 45+09.03 TO 45+23.10

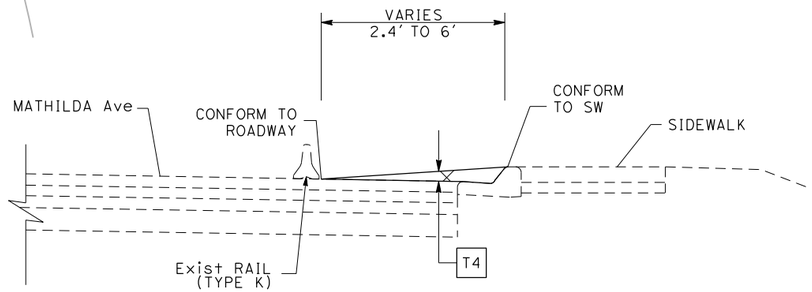

MATHILDA AVENUE
SECTION "A-A" - "M1" Sta 43+82.65 TO 44+23.99

FOR NOTES AND LEGEND, SEE SHEET DE-1

APPROVED FOR DETOUR CONSTRUCTION WORK ONLY

DETOUR PLAN
(STAGE 1 - PHASE 4)
SCALE: 1" = 20'

DE-13

STATE OF CALIFORNIA - DEPARTMENT OF TRANSPORTATION
Caltrans
CONSULTANT FUNCTIONAL SUPERVISOR: TIMOTHY J. LEE
CALCULATED-DESIGNED BY: NOOR ALZIREENI
CHECKED BY: SHAWN VOGTMAN
REVISED BY: SCV
DATE REVISED: 01/05/18

X:\237_101_Mathilda\000_CAD\Sheets\MG-Detour\MG-Plans\0413000204mg013.dgn

LAST REVISION 01-15-18
DATE PLOTTED => 6/20/2018
TIME PLOTTED => 11:17:03 AM

Dist	COUNTY	ROUTE	POST MILES TOTAL PROJECT	SHEET No.	TOTAL SHEETS
04	SCL	101,237	45.2/45.8, 2.7/3.3	256	736

REGISTERED CIVIL ENGINEER — 6-13-18 DATE

6-20-18
PLANS APPROVAL DATE

STEVE LOUPE No. 63575 Exp. 9/30/18 CIVIL — REGISTERED PROFESSIONAL ENGINEER — STATE OF CALIFORNIA

THE STATE OF CALIFORNIA OR ITS OFFICERS OR AGENTS SHALL NOT BE RESPONSIBLE FOR THE ACCURACY OR COMPLETENESS OF SCANNED COPIES OF THIS PLAN SHEET.

WMH CORPORATION
50 W San Fernando St
Suite 950
San Jose, CA 95113

VTA
3331 N First St
Building B
San Jose, Ca 95134

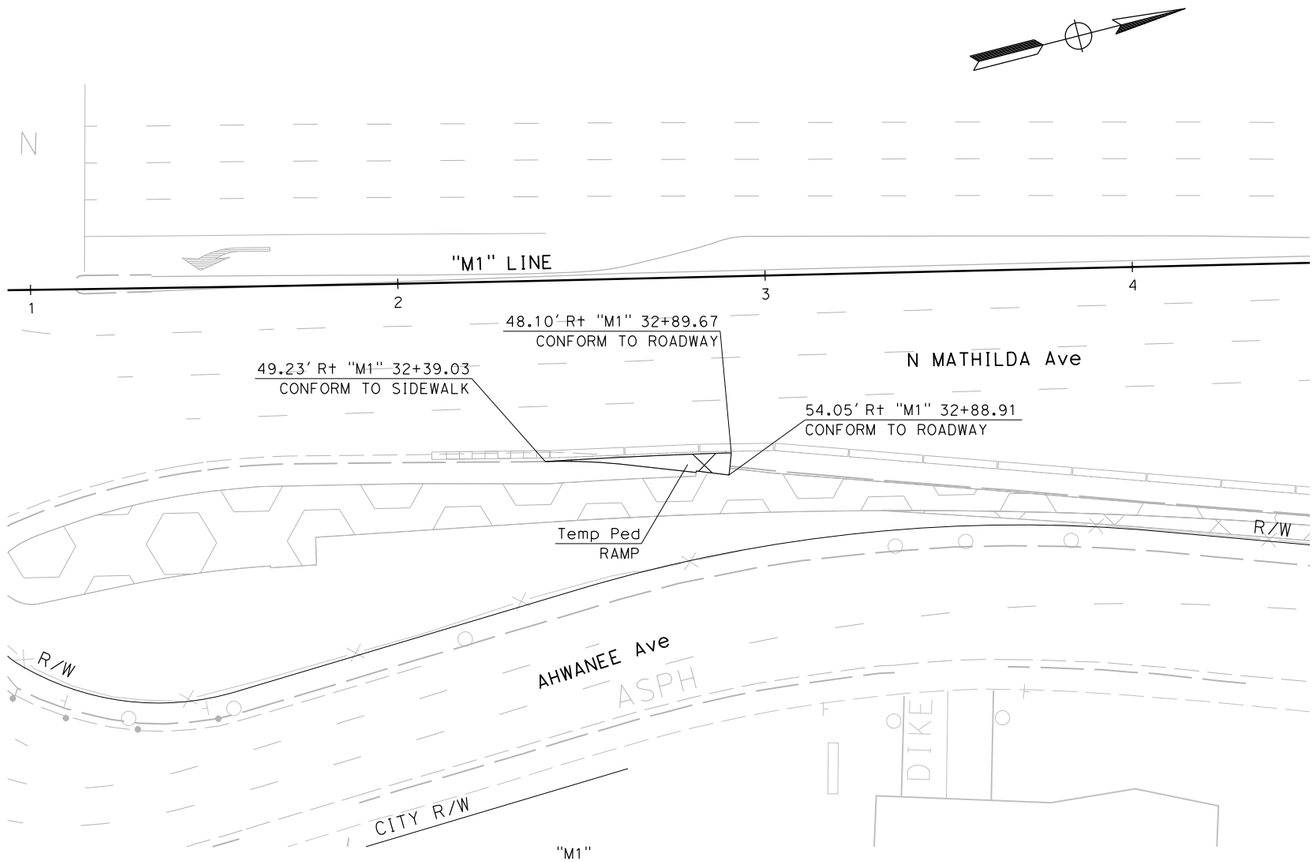

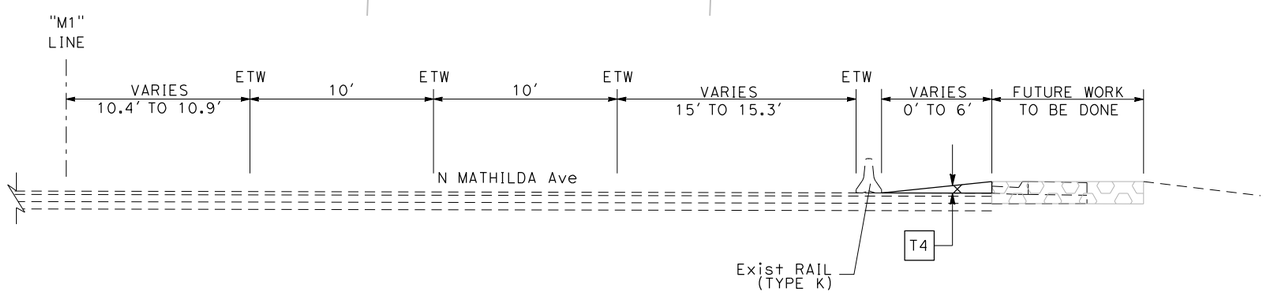

US 101 NB ON-RAMP

"M1" Sta 32+39.03 TO 32+89.67

FOR NOTES AND LEGEND, SEE SHEET DE-1

APPROVED FOR DETOUR CONSTRUCTION WORK ONLY

DETOUR PLAN
(STAGE 2 - PHASE 1)

SCALE: 1" = 20'

DE-14

STATE OF CALIFORNIA - DEPARTMENT OF TRANSPORTATION | CONSULTANT FUNCTIONAL SUPERVISOR: TIMOTHY J. LEE | CALCULATED-DESIGNED BY: NOOR ALZIREENI | CHECKED BY: SHAWN VOGTMAN | REVISED BY: SCV | DATE REVISED: 01/05/18

LAST REVISION: DATE PLOTTED => 6/20/2018, TIME PLOTTED => 11:17:08 AM

X:\237_101_Mathilda\000_CAD\Sheets\MG-Detour\MG-Plans\0413000204mg014.dgn

BORDER LAST REVISED 7/2/2010 | USERNAME => Eilif, DGN FILE => 0413000204mg014.dgn | RELATIVE BORDER SCALE IS IN INCHES 0 1 2 3 | UNIT 0000 | PROJECT NUMBER & PHASE 0413000204

Dist	COUNTY	ROUTE	POST MILES TOTAL PROJECT	SHEET No.	TOTAL SHEETS
04	SCL	101,237	45.2/45.8, 2.7/3.3	257	736

REGISTERED CIVIL ENGINEER — 6-13-18 DATE

6-20-18
PLANS APPROVAL DATE

STEVE LOUPE No. 63575 Exp. 9/30/18 CIVIL — REGISTERED PROFESSIONAL ENGINEER — STATE OF CALIFORNIA

THE STATE OF CALIFORNIA OR ITS OFFICERS OR AGENTS SHALL NOT BE RESPONSIBLE FOR THE ACCURACY OR COMPLETENESS OF SCANNED COPIES OF THIS PLAN SHEET.

WMH CORPORATION 50 W San Fernando St Suite 950 San Jose, CA 95113	VTA 3331 N First St Building B San Jose, Ca 95134

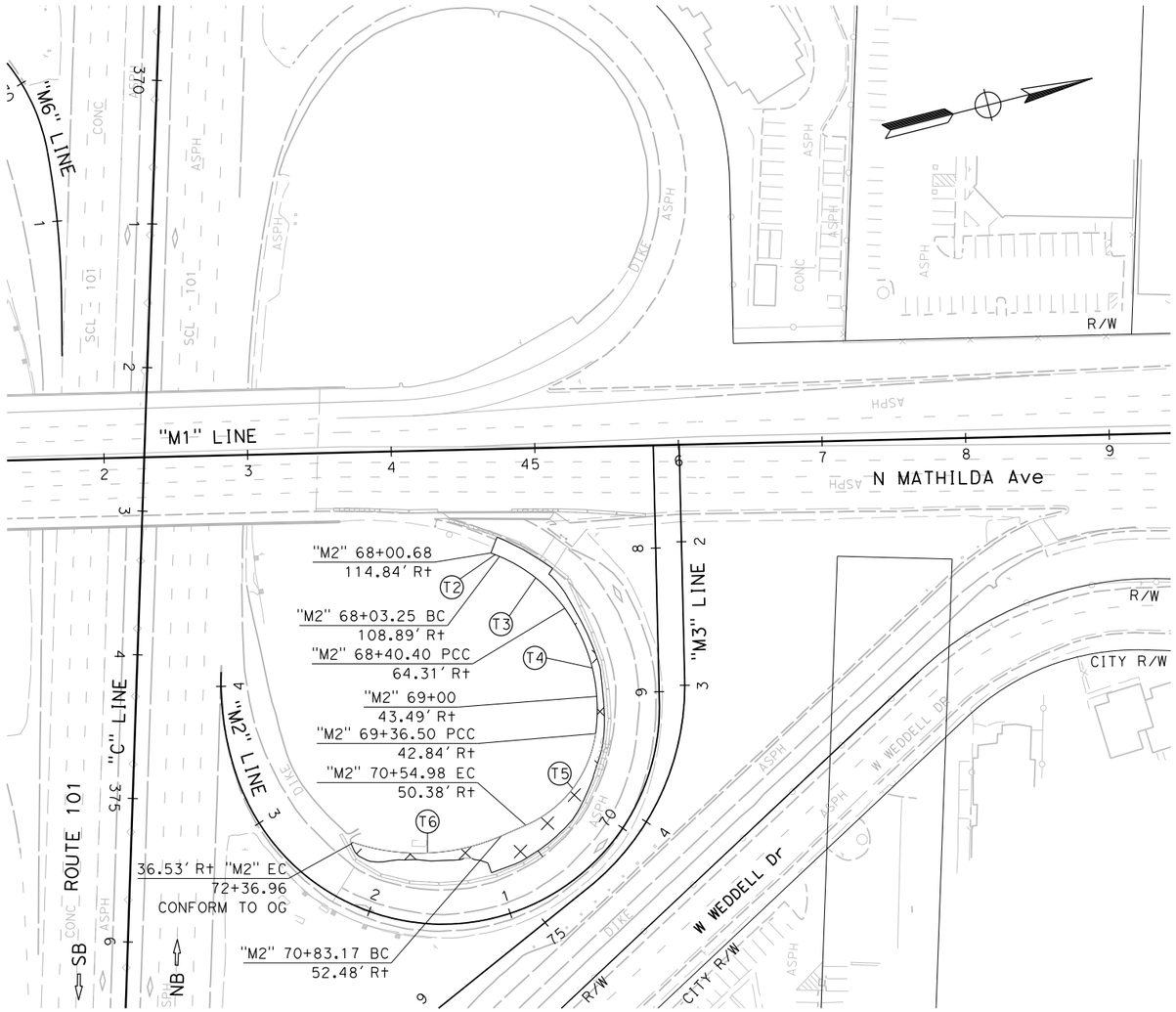

CURVE DATA

No.	R	Δ	T	L
T2	312.81′	68°38′56.0"	213.58′	6.48′
T3	106.21′	31°42′26.6"	30.16′	58.78′
T4	120.73′	43°33′39.8"	48.24′	92.00′
T5	81.98′	58°30′32.9"	45.92′	83.72′
T6	144.30′	42°8′59.6"	40.91′	106.16′

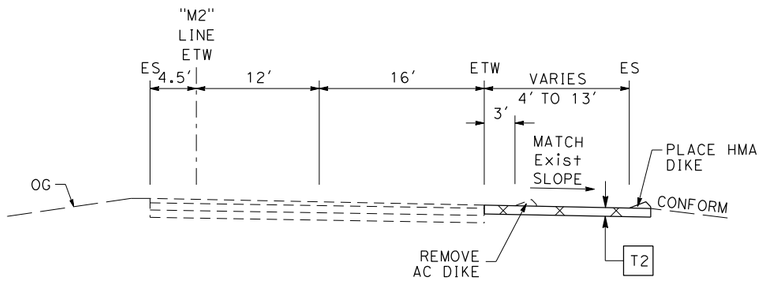

US 101 NB ON-RAMP
"M2" Sta 67+89.63 TO 72+36.96

FOR NOTES AND LEGEND, SEE SHEET DE-1

APPROVED FOR DETOUR CONSTRUCTION WORK ONLY

DETOUR PLAN
(STAGE 2 - PHASE 1)
SCALE: 1" = 50′

DE-15

	REVISED BY	DATE REVISED
	SCV	01/05/18

CALCULATED-DESIGNED BY: NOOR ALZIREENI
CHECKED BY: SHAWN VOGTMAN
CONSULTANT FUNCTIONAL SUPERVISOR: TIMOTHY J. LEE
STATE OF CALIFORNIA - DEPARTMENT OF TRANSPORTATION
Caltrans

X:\237_101_Mathilda\000_CAD\Sheets\MG-Detour\MG-Plans\0413000204mg015.dgn

LAST REVISION 01-15-18 | DATE PLOTTED => 6/20/2018 | TIME PLOTTED => 11:17:12 AM

BORDER LAST REVISED 7/2/2010 | USERNAME => Eilif | DGN FILE => 0413000204mg015.dgn | RELATIVE BORDER SCALE IS IN INCHES 0 1 2 3 | UNIT 0000 | PROJECT NUMBER & PHASE 0413000204

Dist	COUNTY	ROUTE	POST MILES TOTAL PROJECT	SHEET No.	TOTAL SHEETS
04	SCL	101,237	45.2/45.8, 2.7/3.3	258	736

REGISTERED CIVIL ENGINEER — DATE: 6-13-18

6-20-18
PLANS APPROVAL DATE

REGISTERED PROFESSIONAL ENGINEER — STEVE LOUPE — No. 63575 — Exp. 9/30/18 — CIVIL — STATE OF CALIFORNIA

THE STATE OF CALIFORNIA OR ITS OFFICERS OR AGENTS SHALL NOT BE RESPONSIBLE FOR THE ACCURACY OR COMPLETENESS OF SCANNED COPIES OF THIS PLAN SHEET.

WMH CORPORATION 50 W San Fernando St Suite 950 San Jose, CA 95113	VTA 3331 N First St Building B San Jose, Ca 95134

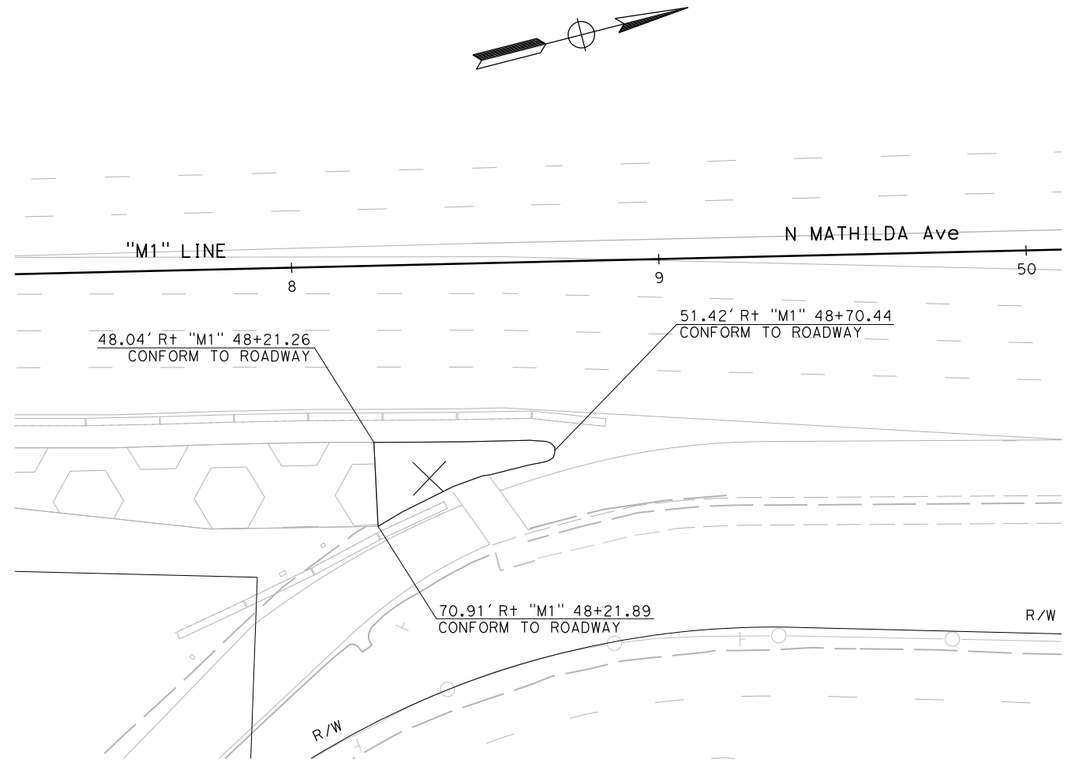

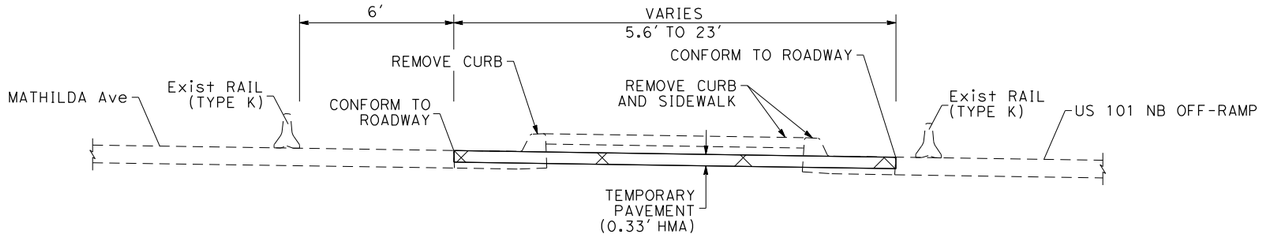

MATHILDA AVENUE

"M1" Sta 48+21.26 TO 48+70.44

FOR NOTES AND LEGEND, SEE SHEET DE-1

APPROVED FOR DETOUR CONSTRUCTION WORK ONLY

DETOUR PLAN (STAGE 2 - PHASE 2)

SCALE: 1" = 20'

DE-16

CALCULATED-DESIGNED BY	NOOR ALZIREENI	
CHECKED BY	SHAWN VOGTMAN	
CONSULTANT FUNCTIONAL SUPERVISOR	TIMOTHY J. LEE	
REVISED BY	SCV	
DATE REVISED	01/05/18	

STATE OF CALIFORNIA - DEPARTMENT OF TRANSPORTATION — Caltrans®

X:\237_101_Mathilda\000_CAD\Sheets\MG-Detour\MG-Plans\0413000204mg016.dgn

LAST REVISION 01-15-18 | DATE PLOTTED => 6/20/2018 | TIME PLOTTED => 11:17:17 AM

BORDER LAST REVISED 7/2/2010 | USERNAME => Eilif | DGN FILE => 0413000204mg016.dgn | RELATIVE BORDER SCALE IS IN INCHES 0 1 2 3 | UNIT 0000 | PROJECT NUMBER & PHASE 0413000204

Dist	COUNTY	ROUTE	POST MILES TOTAL PROJECT	SHEET No.	TOTAL SHEETS
04	SCL	101,237	45.2/45.8, 2.7/3.3	259	736

REGISTERED CIVIL ENGINEER 6-13-18 DATE

6-20-18
PLANS APPROVAL DATE

REGISTERED PROFESSIONAL ENGINEER STEVE LOUPE No. 63575 Exp. 9/30/20 CIVIL STATE OF CALIFORNIA

THE STATE OF CALIFORNIA OR ITS OFFICERS OR AGENTS SHALL NOT BE RESPONSIBLE FOR THE ACCURACY OR COMPLETENESS OF SCANNED COPIES OF THIS PLAN SHEET.

WMH CORPORATION
50 W San Fernando St
Suite 950
San Jose, CA 95113

VTA
3331 N First St
Building B
San Jose, Ca 95134

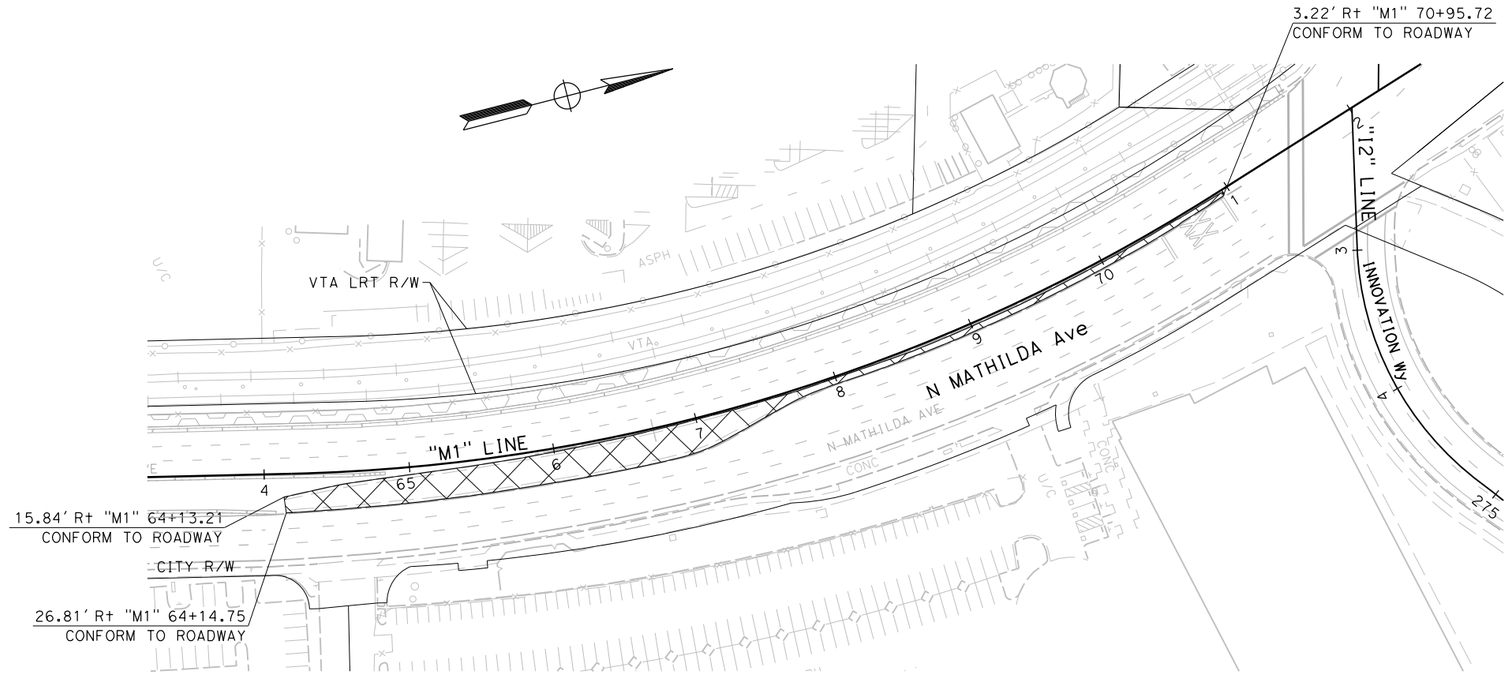

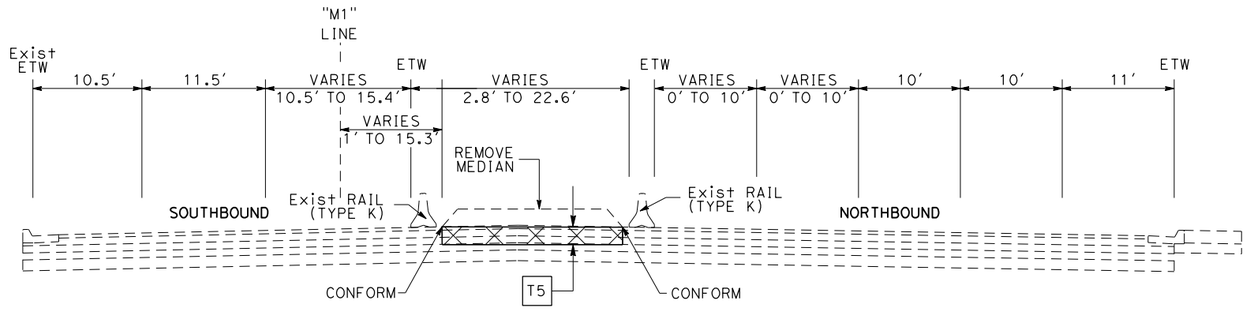

MATHILDA AVENUE
"M1" Sta 64+13.21 TO 70+95.77

FOR NOTES AND LEGEND, SEE SHEET DE-1

APPROVED FOR DETOUR CONSTRUCTION WORK ONLY

DETOUR PLAN
(STAGE 2 - PHASE 2)
SCALE: 1" = 50'

DE-17

STATE OF CALIFORNIA - DEPARTMENT OF TRANSPORTATION
Caltrans
CONSULTANT FUNCTIONAL SUPERVISOR: TIMOTHY J. LEE
CALCULATED-DESIGNED BY: NOOR ALZIREENI
CHECKED BY: SHAWN VOGTMAN
REVISED BY: SCV
DATE REVISED: 01/05/18

X:\237_101_Mathilda\000_CAD\Sheets\000_Submittals\Conformed Plans\0413000204mg017.dgn

LAST REVISION 01-15-18
DATE PLOTTED => 12/3/2018
TIME PLOTTED => 12:22:00 PM

BORDER LAST REVISED 7/2/2010
USERNAME => eilif
DGN FILE => 0413000204mg017.dgn
RELATIVE BORDER SCALE IS IN INCHES 0 1 2 3
UNIT 0000
PROJECT NUMBER & PHASE 0413000204

Dist	COUNTY	ROUTE	POST MILES TOTAL PROJECT	SHEET No.	TOTAL SHEETS
04	SCL	101,237	45.2/45.8, 2.7/3.3	260	736

REGISTERED CIVIL ENGINEER 6-13-18 DATE

6-20-18
PLANS APPROVAL DATE

REGISTERED PROFESSIONAL ENGINEER STEVE LOUPE No. 63575 Exp. 9/30/18 CIVIL STATE OF CALIFORNIA

THE STATE OF CALIFORNIA OR ITS OFFICERS OR AGENTS SHALL NOT BE RESPONSIBLE FOR THE ACCURACY OR COMPLETENESS OF SCANNED COPIES OF THIS PLAN SHEET.

WMH CORPORATION
50 W San Fernando St
Suite 950
San Jose, CA 95113

VTA
3331 N First St
Building B
San Jose, Ca 95134

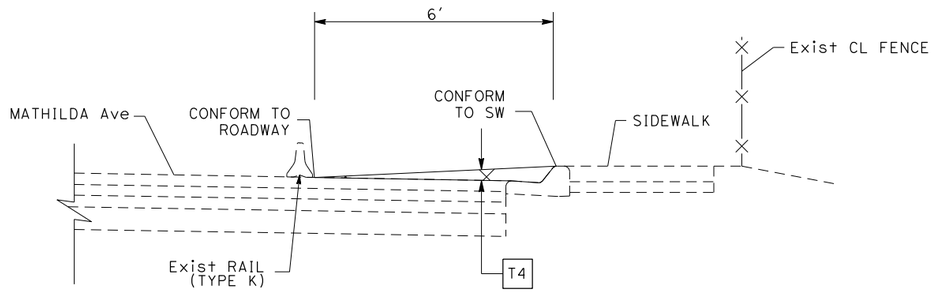

MATHILDA AVENUE
SECTION "A-A" - "M1" Sta 44+17.18 TO 44+47.35

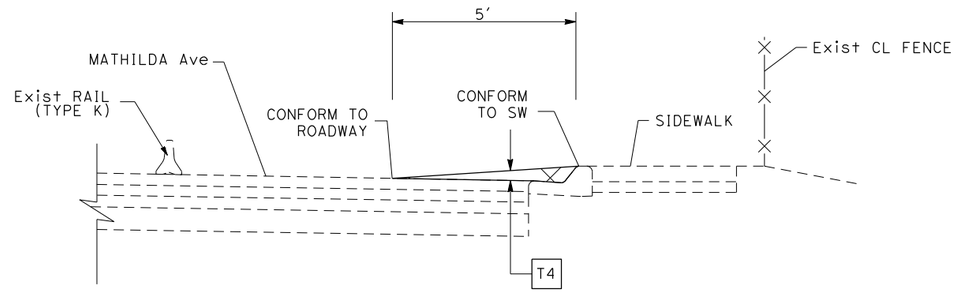

MATHILDA AVENUE
SECTION "B-B" - "M1" Sta 47+95.99 TO 48+01.99

FOR NOTES AND LEGEND, SEE SHEET DE-1

APPROVED FOR DETOUR CONSTRUCTION WORK ONLY

DETOUR PLAN
(STAGE 2 - PHASE 4)
SCALE: 1" = 20'

DE-18

STATE OF CALIFORNIA - DEPARTMENT OF TRANSPORTATION
Caltrans
CONSULTANT FUNCTIONAL SUPERVISOR: TIMOTHY J. LEE
CALCULATED-DESIGNED BY: NOOR ALZIREENI
CHECKED BY: SHAWN VOGTMAN
REVISED BY: SCV
DATE REVISED: 01/05/18

X:\237_101_Mathilda\000_CAD\Sheets\MG-Detour\MG-Plans\0413000204mg018.dgn

LAST REVISION 01-15-18
DATE PLOTTED => 6/20/2018
TIME PLOTTED => 11:17:27 AM

Dist	COUNTY	ROUTE	POST MILES TOTAL PROJECT	SHEET No.	TOTAL SHEETS
04	SCL	101,237	45.2/45.8, 2.7/3.3	261	736

REGISTERED CIVIL ENGINEER — 6-13-18 DATE

6-20-18
PLANS APPROVAL DATE

STEVE LOUPE No. 63575 Exp. 9/30/18 CIVIL — REGISTERED PROFESSIONAL ENGINEER — STATE OF CALIFORNIA

THE STATE OF CALIFORNIA OR ITS OFFICERS OR AGENTS SHALL NOT BE RESPONSIBLE FOR THE ACCURACY OR COMPLETENESS OF SCANNED COPIES OF THIS PLAN SHEET.

WMH CORPORATION
50 W San Fernando St
Suite 950
San Jose, CA 95113

VTA
3331 N First St
Building B
San Jose, Ca 95134

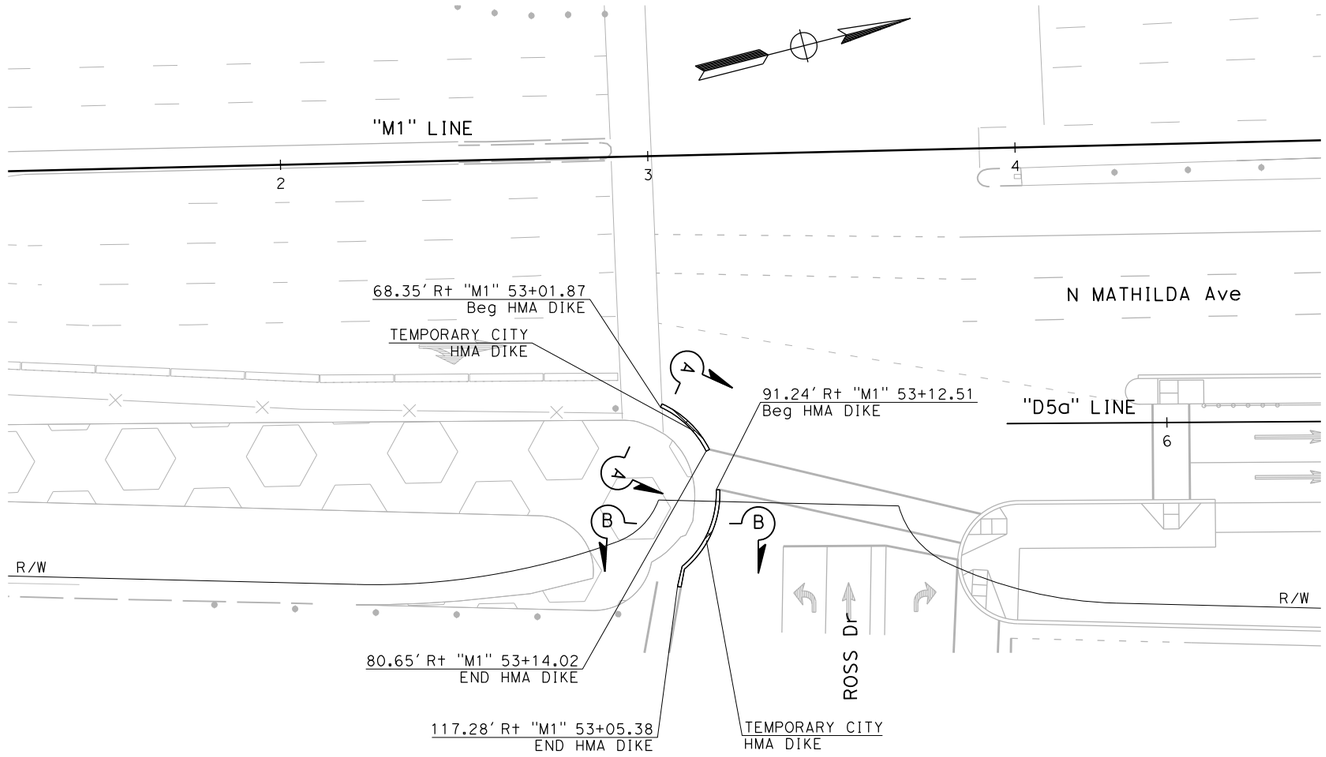

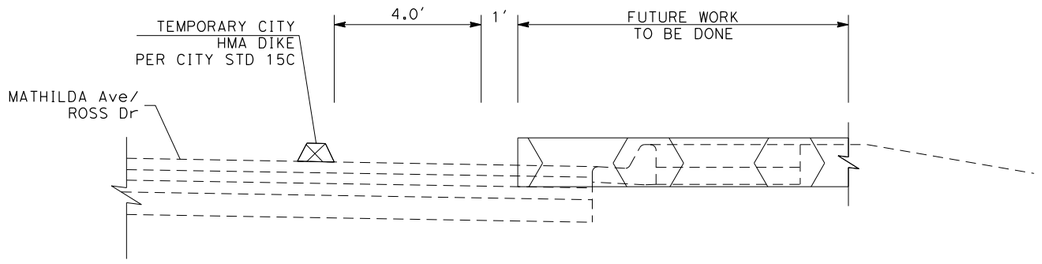

MATHILDA AVENUE

SECTION "A'-A" - "M1" Sta 52+64.59 TO 52+70.82
SECTION "B-B" - "M1" Sta 53+02.30 TO 53+17.51

FOR NOTES AND LEGEND, SEE SHEET DE-1

APPROVED FOR DETOUR CONSTRUCTION WORK ONLY

DETOUR PLAN
(STAGE 2 - PHASE 4)

SCALE: 1" = 20'

DE-19

	REVISED BY	DATE REVISED
	SCV	01/05/18

CALCULATED-DESIGNED BY: NOOR ALZIREENI
CHECKED BY: SHAWN VOGTMAN
CONSULTANT FUNCTIONAL SUPERVISOR: TIMOTHY J. LEE

STATE OF CALIFORNIA - DEPARTMENT OF TRANSPORTATION

X:\237_101_Mathilda\000_CAD\Sheets\MG-Detour\MG-Plans\0413000204mg019.dgn

LAST REVISION 01-15-18 DATE PLOTTED => 6/20/2018 TIME PLOTTED => 11:17:31 AM

BORDER LAST REVISED 7/2/2010 | USERNAME => Eilif | DGN FILE => 0413000204mg019.dgn | RELATIVE BORDER SCALE IS IN INCHES 0 1 2 3 | UNIT 0000 | PROJECT NUMBER & PHASE 0413000204

Dist	COUNTY	ROUTE	POST MILES TOTAL PROJECT	SHEET No.	TOTAL SHEETS
04	SCL	101,237	45.2/45.8, 2.7/3.3	262	736

6-13-18
REGISTERED CIVIL ENGINEER DATE

REGISTERED PROFESSIONAL ENGINEER
STEVE LOUPE
No. 63575
Exp. 9/30/20
CIVIL
STATE OF CALIFORNIA

6-20-18
PLANS APPROVAL DATE

THE STATE OF CALIFORNIA OR ITS OFFICERS OR AGENTS SHALL NOT BE RESPONSIBLE FOR THE ACCURACY OR COMPLETENESS OF SCANNED COPIES OF THIS PLAN SHEET.

WMH CORPORATION
50 W San Fernando St
Suite 950
San Jose, CA 95113

VTA
3331 N First St
Building B
San Jose, Ca 95134

DETOUR QUANTITIES

STAGE No.	PHASE No.	SHEET No.	LOCATION	AREA (N)	REMOVE ASPHALT CONCRETE DIKE	REMOVE ASPHALT CONCRETE PAVEMENT	*ROADWAY EXCAVATION	*EMBANKMENT (N)	**HOT MIX ASPHALT (TYPE A)	+PLACE HMA DIKE (TYPE A)	NOTES
				SQFT	LF	CY			TON	LF	
1	1	DE-3	"M1" LINE FROM 53+89.54 TO 53+94.54	70					5		TEMPORARY PAVEMENT FOR Ped RAMP ALONG ROSS Dr
1	1	DE-4	"M5" LINE FROM 68+01.67 TO 71+64.50	1895	400		54	6	132	400	TEMPORARY PAVEMENT FOR SB 101 OFF-RAMP.
1	1	DE-5	"M6" LINE FROM 65+59.72 TO 69+61.86	3700	300		185	20	310	300	TEMPORARY PAVEMENT FOR SB 101 ON-RAMP.
1	1	DE-6	"D3" LINE FROM 15+07.93 TO 18+36.41	4930			185		370		TEMPORARY PAVEMENT FOR WB SR 237 OFF-RAMP.
1	1	DE-7	"B1" LINE FROM 80+88.83 TO 81+02.53	150					5		TEMPORARY PAVEMENT FOR Ped RAMP ALONG BORDEAUX Dr
1	2	DE-8	"M1" LINE FROM 43+69.00 TO 45+32.31	1375	180		130	30	105	175	TEMPORARY PAVEMENT FOR NB 101 OFF-RAMP.
1	2	DE-9	"M5" LINE FROM 66+89.17 TO 69+56.25	1480	170		115	30	115	180	TEMPORARY PAVEMENT FOR SB 101 OFF-RAMP.
1	2	DE-9	"D5a" LINE FROM 6+13.00 TO 6+21.00	50					5		TEMPORARY PAVEMENT FOR Ped RAMP ALONG EB SR 237 ON-RAMP.
1	2	DE-11	"D3" LINE FROM 11+55.34 TO 18+22.23	8010	670		300		605	670	TEMPORARY PAVEMENT FOR WB SR 237 OFF-RAMP.
1	3	DE-12	"M1" LINE FROM 28+76.10 TO 29+90.49	690		10			20		TEMPORARY SIDEWALK.
1	3	DE-12	"M1" LINE FROM 30+13.31 TO 30+29.33	170		2			5		TEMPORARY SIDEWALK.
1	3	DE-12	"M1" LINE FROM 62+23.07 TO 62+49.59	110		3			5		TEMPORARY PAVEMENT FOR Ped RAMP ALONG MATHILDA Ave
1	4	DE-13	"M1" LINE FROM 43+82.65 TO 44+23.99	80		3			5		TEMPORARY PAVEMENT FOR Ped RAMP ALONG MATHILDA Ave
1	4	DE-13	"M1" LINE FROM 45+09.03 TO 45+23.10	60		2			5		TEMPORARY PAVEMENT FOR Ped RAMP ALONG MATHILDA Ave
2	1	DE-14	"M1" LINE FROM 32+39.03 TO 32+89.67	140		3			10		TEMPORARY PAVEMENT FOR Ped RAMP ALONG MATHILDA Ave
2	1	DE-15	"M2" LINE FROM 67+89.63 TO 72+36.96	3550	370		282	5	355	400	TEMPORARY PAVEMENT FOR NB 101 ON-RAMP.
2	1	DE-16	"M1" LINE FROM 48+21.26 TO 48+70.44	600					45		TEMPORARY PAVEMENT FOR Ped RAMP ALONG MATHILDA Ave
2	4	DE-18	"M1" LINE FROM 44+17.18 TO 44+47.35	110		2			5		TEMPORARY PAVEMENT FOR Ped RAMP ALONG MATHILDA Ave
2	4	DE-18	"M1" LINE FROM 47+95.99 TO 48+01.99	30		2			5		TEMPORARY PAVEMENT FOR Ped RAMP ALONG MATHILDA Ave
2	4	DE-19	"M1" LINE FROM 52+64.59 TO 53+17.51	50					5		TEMPORARY DIKE FOR PEDESTRIAN REFUGE AREA
TOTAL				27250	2090	27	1251	91	2117	2125	

(N) NOT A SEPARATE PAY ITEM, FOR INFORMATION ONLY
* FOR TOTAL QUANTITIES, SEE EARTHWORK SUMMARY
** FOR TOTAL QUANTITIES, SEE ROADWAY SUMMARY
\+ FOR TOTAL QUANTITIES, SEE PLACE HMA DIKE QUANTITIES

DETOUR QUANTITIES

DEQ-1

CALCULATED-DESIGNED BY	CARLOS RODRIGUEZ	REVISED BY	SCV
CHECKED BY	SHAWN VOGTMAN	DATE REVISED	01/05/18

CONSULTANT FUNCTIONAL SUPERVISOR: TIMOTHY J. LEE

STATE OF CALIFORNIA - DEPARTMENT OF TRANSPORTATION

LAST REVISION 01-15-18 | DATE PLOTTED => 12/3/2018 | TIME PLOTTED => 12:24:16 PM

x:\237_101_Mathilda\000_CAD\Sheets\000_Submittals\Conformed Plans\0413000204mh001.dgn

BORDER LAST REVISED 7/2/2010 | USERNAME => eilif | DGN FILE => 0413000204mh001.dgn | RELATIVE BORDER SCALE IS IN INCHES 0 1 2 3 | UNIT 0000 | PROJECT NUMBER & PHASE 0413000204

NOTES:

1. FOR ACCURATE RIGHT OF WAY DATA, CONTACT RIGHT OF WAY ENGINEERING AT THE DISTRICT OFFICE.
2. ALL PAVEMENT LEGENDS AND MARKINGS SHALL BE THERMOPLASTIC UNLESS OTHERWISE NOTED ON THE PLANS.
3. CONFLICTING STRIPING, PAVEMENT LEGENDS AND MARKINGS SHALL BE REMOVED PRIOR TO THE INSTALLATION OF NEW STRIPING AND PAVEMENT MARKINGS.
4. EXACT LOCATION OF PAVEMENT MARKINGS TO BE DETERMINED BY THE ENGINEER.
5. ALL CHEVRON AND DIAGONAL MARKINGS SHALL BE ANGLED 45° FROM ETW.
6. WIDTH OF CROSSWALK LINES ARE 12".

LEGEND:

No.	PAVEMENT DELINEATION DETAIL
A	12" THERMOPLASTIC PAVEMENT LIMIT LINE
	TYPE I (24') ARROW
	TYPE I (10') ARROW
	TYPE II (R) ARROW
	TYPE II (L) ARROW
	TYPE III (L) ARROW
	TYPE III (R) ARROW
	TYPE III (B) ARROW
	TYPE VI (R) ARROW
	TYPE V ARROW
	TYPE VIII ARROW
	CHANGE OF TRAFFIC STRIPE DETAIL
	BEGIN/END OF TRAFFIC STRIPE DETAIL
	RAILROAD CROSSING SYMBOL
	BIKE LANE MARKING Mod, SEE PDD-2
BL	BIKE LANE
BL	BICYCLE LOOP DETECTOR SYMBOL Mod, SEE PDD-2
	HOV LANE SYMBOL
	SHARROW
	BIKE LANE SYMBOL WITH PERSON
	PEDESTRIAN SYMBOL, SEE PDD-2
K	OBJECT MARKER TYPE (K, Q, N, L, P, & R)
G	GUARD RAIL DELINEATOR TYPE (F,G)
G	CONCRETE BARRIER DELINEATOR TYPE (F, & G)
F	DELINEATOR (CLASS 1) TYPE (F,G)
C	"CONTRAST" PAVEMENT STRIPING

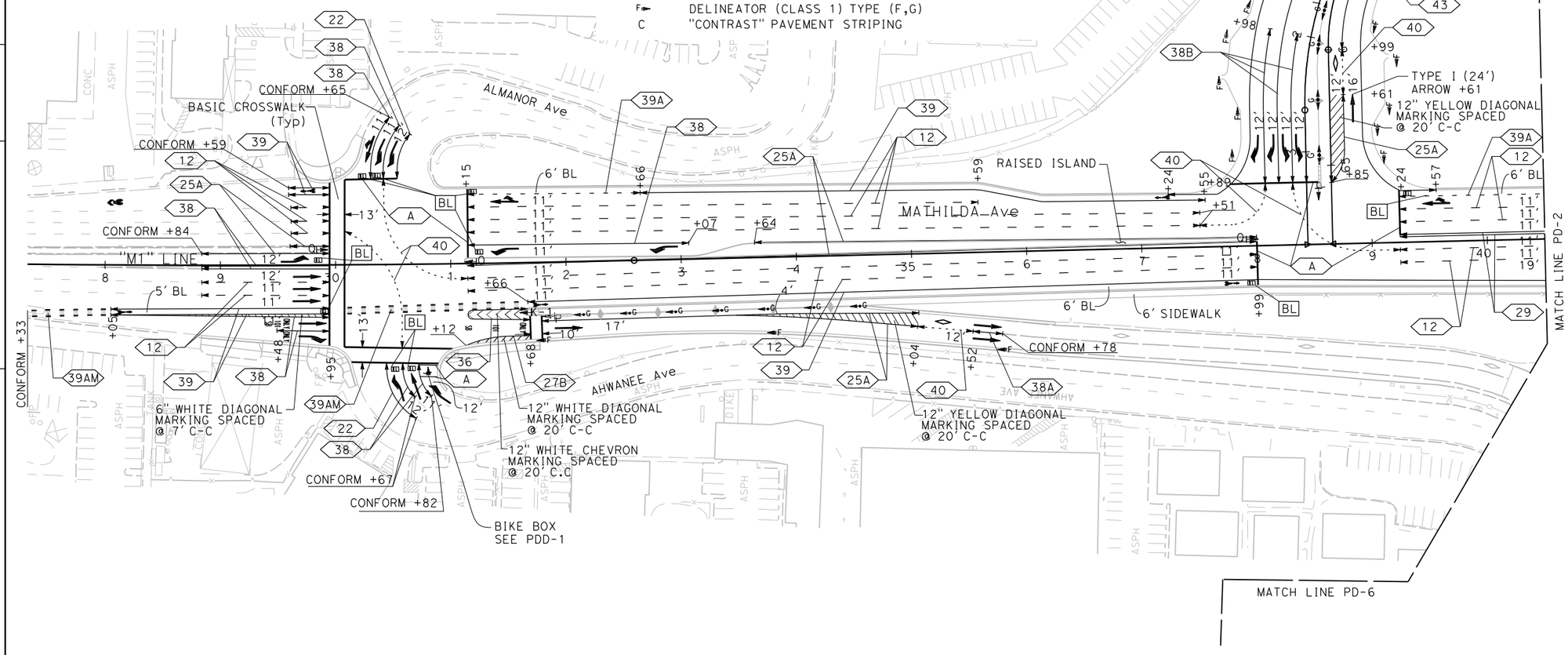

Dist	COUNTY	ROUTE	POST MILES TOTAL PROJECT	SHEET No.	TOTAL SHEETS
04	SCL	101,237	45.2/45.8, 2.7/3.3	263	736

6-13-18
REGISTERED CIVIL ENGINEER — DATE

6-20-18
PLANS APPROVAL DATE

REGISTERED PROFESSIONAL ENGINEER — STEVE LOUPE — No. 63575 — Exp. 9/30/18 — CIVIL — STATE OF CALIFORNIA

THE STATE OF CALIFORNIA OR ITS OFFICERS OR AGENTS SHALL NOT BE RESPONSIBLE FOR THE ACCURACY OR COMPLETENESS OF SCANNED COPIES OF THIS PLAN SHEET.

WMH CORPORATION 50 W San Fernando St Suite 950 San Jose, CA 95113	VTA 3331 N First St Building B San Jose, Ca 95134

REVISED BY	DATE REVISED
EF	08/10/17
EF	05/03/18

CALCULATED-DESIGNED BY: EILI FARAH
CHECKED BY: STEVE LOUPE

CONSULTANT FUNCTIONAL SUPERVISOR: TIMOTHY J. LEE

STATE OF CALIFORNIA - DEPARTMENT OF TRANSPORTATION
Caltrans

X:\237_101_Mathilda\000_CAD\Sheets\MA-Pvmt_Deli\MA-Plans\0413000204na001.dgn

APPROVED FOR PAVEMENT DELINEATION WORK ONLY

PAVEMENT DELINEATION PLAN

SCALE: 1"=50'

PD-1

LAST REVISION — DATE PLOTTED => 9/24/2018, TIME PLOTTED => 12:47:07 PM
01-15-18

BORDER LAST REVISED 7/2/2010 | USERNAME => eilif, DGN FILE => 0413000204na001.dgn | RELATIVE BORDER SCALE IS IN INCHES 0 1 2 3 | UNIT 0000 | PROJECT NUMBER & PHASE 0413000204

Dist	COUNTY	ROUTE	POST MILES TOTAL PROJECT	SHEET No.	TOTAL SHEETS
04	SCL	101,237	45.2/45.8, 2.7/3.3	264	736

REGISTERED CIVIL ENGINEER 6-13-18 DATE

6-20-18
PLANS APPROVAL DATE

REGISTERED PROFESSIONAL ENGINEER STEVE LOUPE No. 63575 Exp. 9/30/18 CIVIL STATE OF CALIFORNIA

THE STATE OF CALIFORNIA OR ITS OFFICERS OR AGENTS SHALL NOT BE RESPONSIBLE FOR THE ACCURACY OR COMPLETENESS OF SCANNED COPIES OF THIS PLAN SHEET.

WMH CORPORATION
50 W San Fernando St
Suite 950
San Jose, CA 95113

VTA
3331 N First St
Building B
San Jose, Ca 95134

NOTE:
FOR ACCURATE RIGHT OF WAY DATA, CONTACT RIGHT OF WAY ENGINEERING AT THE DISTRICT OFFICE.

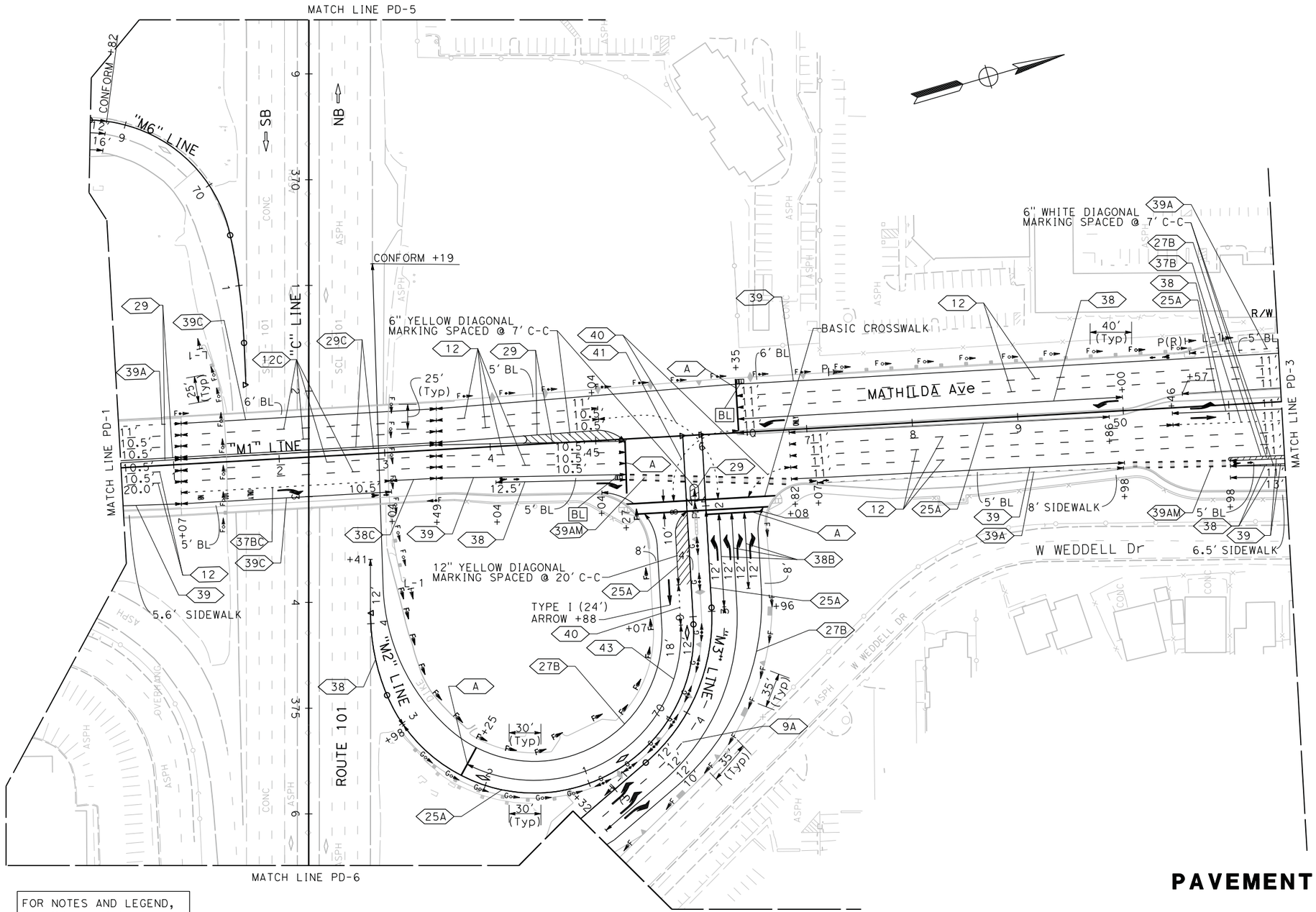

FOR NOTES AND LEGEND, SEE SHEET PD-1

APPROVED FOR PAVEMENT DELINEATION WORK ONLY

PAVEMENT DELINEATION PLAN

SCALE: 1"=50'

PD-2

EF	EF	REVISED BY	EILI FARAH	CALCULATED-DESIGNED BY	CONSULTANT FUNCTIONAL SUPERVISOR
05/03/18	08/10/17	DATE REVISED	STEVE LOUPE	CHECKED BY	TIMOTHY J. LEE

STATE OF CALIFORNIA - DEPARTMENT OF TRANSPORTATION
Caltrans

X:\237_101_Mathilda\000_CAD\Sheets\NA-Pavmt_Delin\NA-Plans\0413000204na002.dgn

LAST REVISION 01-15-18
DATE PLOTTED => 6/20/2018
TIME PLOTTED => 11:17:41 AM

NOTE:
FOR ACCURATE RIGHT OF WAY DATA, CONTACT RIGHT OF WAY ENGINEERING AT THE DISTRICT OFFICE.

Dist	COUNTY	ROUTE	POST MILES TOTAL PROJECT	SHEET No.	TOTAL SHEETS
04	SCL	101,237	45.2/45.8, 2.7/3.3	265	736

REGISTERED CIVIL ENGINEER 6-13-18 DATE

6-20-18
PLANS APPROVAL DATE

REGISTERED PROFESSIONAL ENGINEER STEVE LOUPE No. 63575 Exp. 9/30/18 CIVIL STATE OF CALIFORNIA

THE STATE OF CALIFORNIA OR ITS OFFICERS OR AGENTS SHALL NOT BE RESPONSIBLE FOR THE ACCURACY OR COMPLETENESS OF SCANNED COPIES OF THIS PLAN SHEET.

WMH CORPORATION
50 W San Fernando St
Suite 950
San Jose, CA 95113

VTA
3331 N First St
Building B
San Jose, Ca 95134

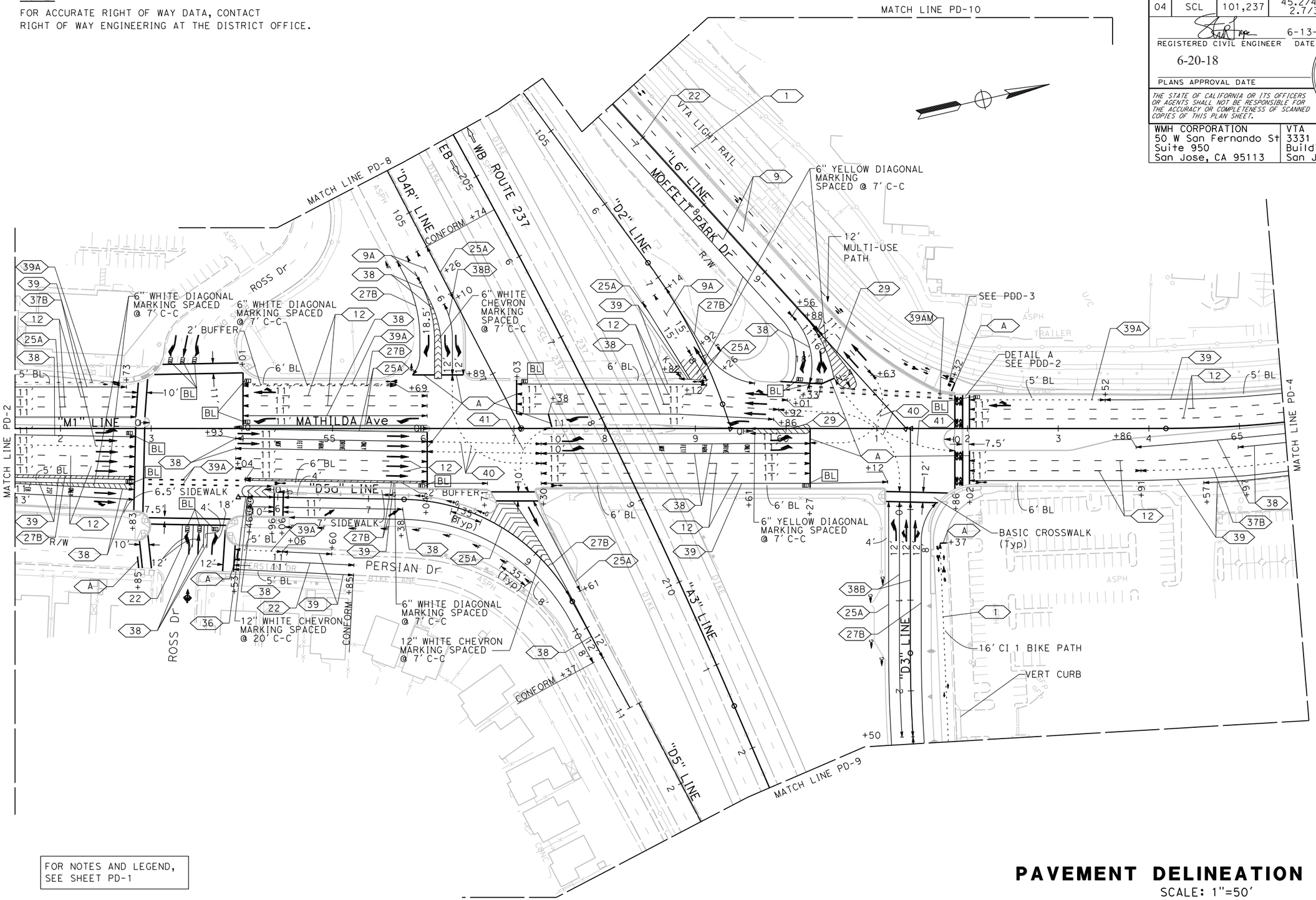

FOR NOTES AND LEGEND, SEE SHEET PD-1

PAVEMENT DELINEATION PLAN

SCALE: 1"=50'

APPROVED FOR PAVEMENT DELINEATION WORK ONLY

PD-3

EF	EF	REVISED BY	EILI FARAH	CALCULATED-DESIGNED BY	CONSULTANT FUNCTIONAL SUPERVISOR
05/03/18	08/10/17	DATE REVISED	STEVE LOUPE	CHECKED BY	TIMOTHY J. LEE

STATE OF CALIFORNIA - DEPARTMENT OF TRANSPORTATION
Caltrans

X:\237_101_Mathilda\000_CAD\Sheets\NA-Pavmt_Delin\NA-Plans\0413000204na003.dgn

LAST REVISION 01-15-18
DATE PLOTTED => 9/21/2018
TIME PLOTTED => 12:59:01 PM

NOTE:

FOR ACCURATE RIGHT OF WAY DATA, CONTACT
RIGHT OF WAY ENGINEERING AT THE DISTRICT OFFICE.

Dist	COUNTY	ROUTE	POST MILES TOTAL PROJECT	SHEET No.	TOTAL SHEETS
04	SCL	101,237	45.2/45.8, 2.7/3.3	266	736

6-13-18
REGISTERED CIVIL ENGINEER DATE

STEVE LOUPE No. 63575 Exp. 9/30/18 CIVIL — REGISTERED PROFESSIONAL ENGINEER — STATE OF CALIFORNIA

6-20-18
PLANS APPROVAL DATE

THE STATE OF CALIFORNIA OR ITS OFFICERS OR AGENTS SHALL NOT BE RESPONSIBLE FOR THE ACCURACY OR COMPLETENESS OF SCANNED COPIES OF THIS PLAN SHEET.

WMH CORPORATION
50 W San Fernando St
Suite 950
San Jose, CA 95113

VTA
3331 N First St
Building B
San Jose, Ca 95134

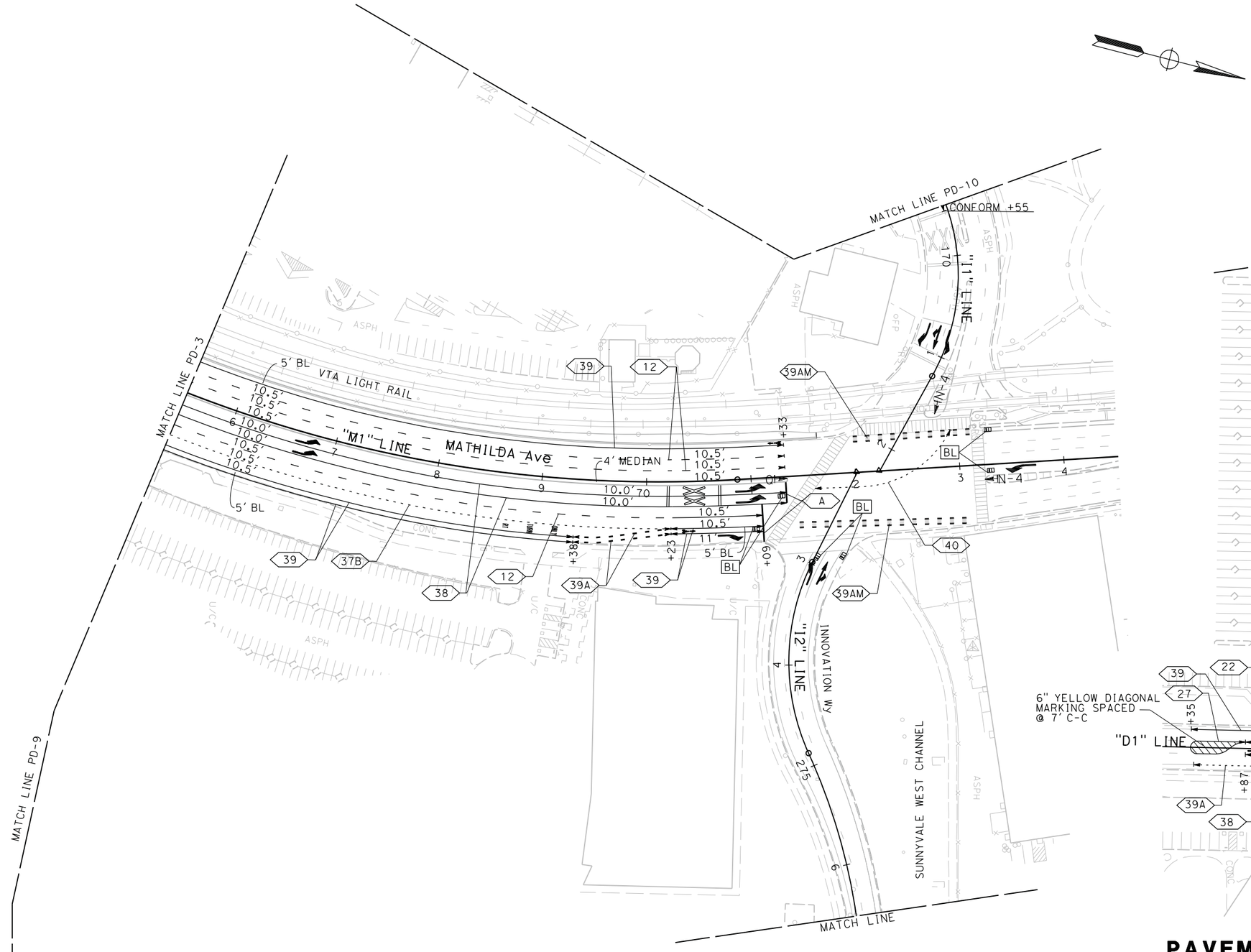

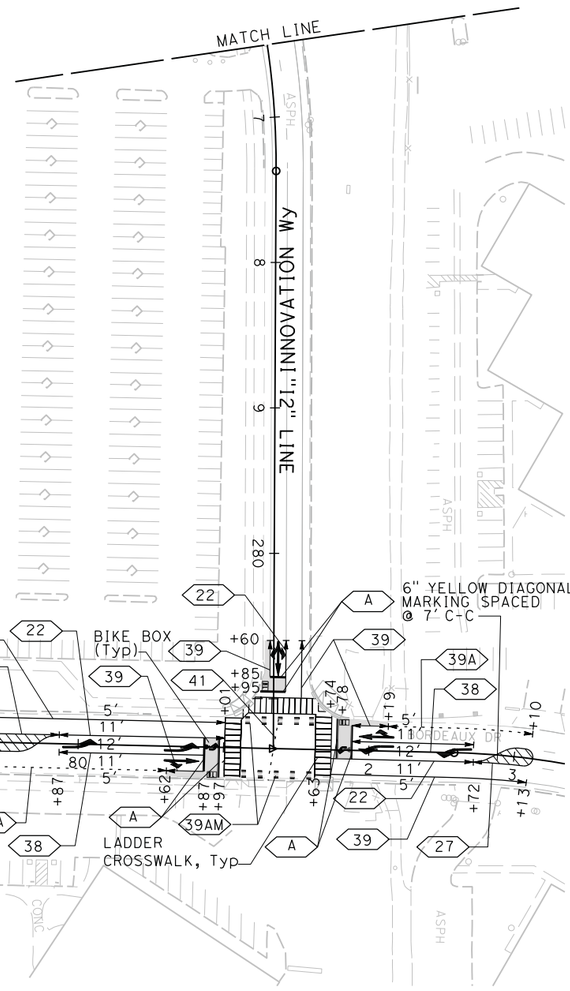

FOR NOTES AND LEGEND, SEE SHEET PD-1

APPROVED FOR PAVEMENT DELINEATION WORK ONLY

PAVEMENT DELINEATION PLAN

SCALE: 1"=50'

PD-4

STATE OF CALIFORNIA - DEPARTMENT OF TRANSPORTATION
Caltrans

CONSULTANT FUNCTIONAL SUPERVISOR: TIMOTHY J. LEE
CALCULATED-DESIGNED BY: EILI FARAH
CHECKED BY: STEVE LOUPE

	REVISED BY	DATE REVISED
	EF	05/03/18
	EF	07/21/17

LAST REVISION 01-15-18
DATE PLOTTED => 9/21/2018
TIME PLOTTED => 12:59:26 PM

X:\237_101_Mathilda\000_CAD\Sheets\NA-Pavmt_Delin\NA-Plans\0413000204na004.dgn

BORDER LAST REVISED 7/2/2010 | USERNAME => eilif | DGN FILE => 0413000204na004.dgn | RELATIVE BORDER SCALE IS IN INCHES 0 1 2 3 | UNIT 0000 | PROJECT NUMBER & PHASE 0413000204

NOTE:

FOR ACCURATE RIGHT OF WAY DATA, CONTACT RIGHT OF WAY ENGINEERING AT THE DISTRICT OFFICE.

Dist	COUNTY	ROUTE	POST MILES TOTAL PROJECT	SHEET No.	TOTAL SHEETS
04	SCL	101,237	45.2/45.8, 2.7/3.3	267	736

REGISTERED CIVIL ENGINEER 6-13-18 DATE

6-20-18

PLANS APPROVAL DATE

REGISTERED PROFESSIONAL ENGINEER STEVE LOUPE No. 63575 Exp. 9/30/18 CIVIL STATE OF CALIFORNIA

THE STATE OF CALIFORNIA OR ITS OFFICERS OR AGENTS SHALL NOT BE RESPONSIBLE FOR THE ACCURACY OR COMPLETENESS OF SCANNED COPIES OF THIS PLAN SHEET.

WMH CORPORATION
50 W San Fernando St
Suite 950
San Jose, CA 95113

VTA
3331 N First St
Building B
San Jose, Ca 95134

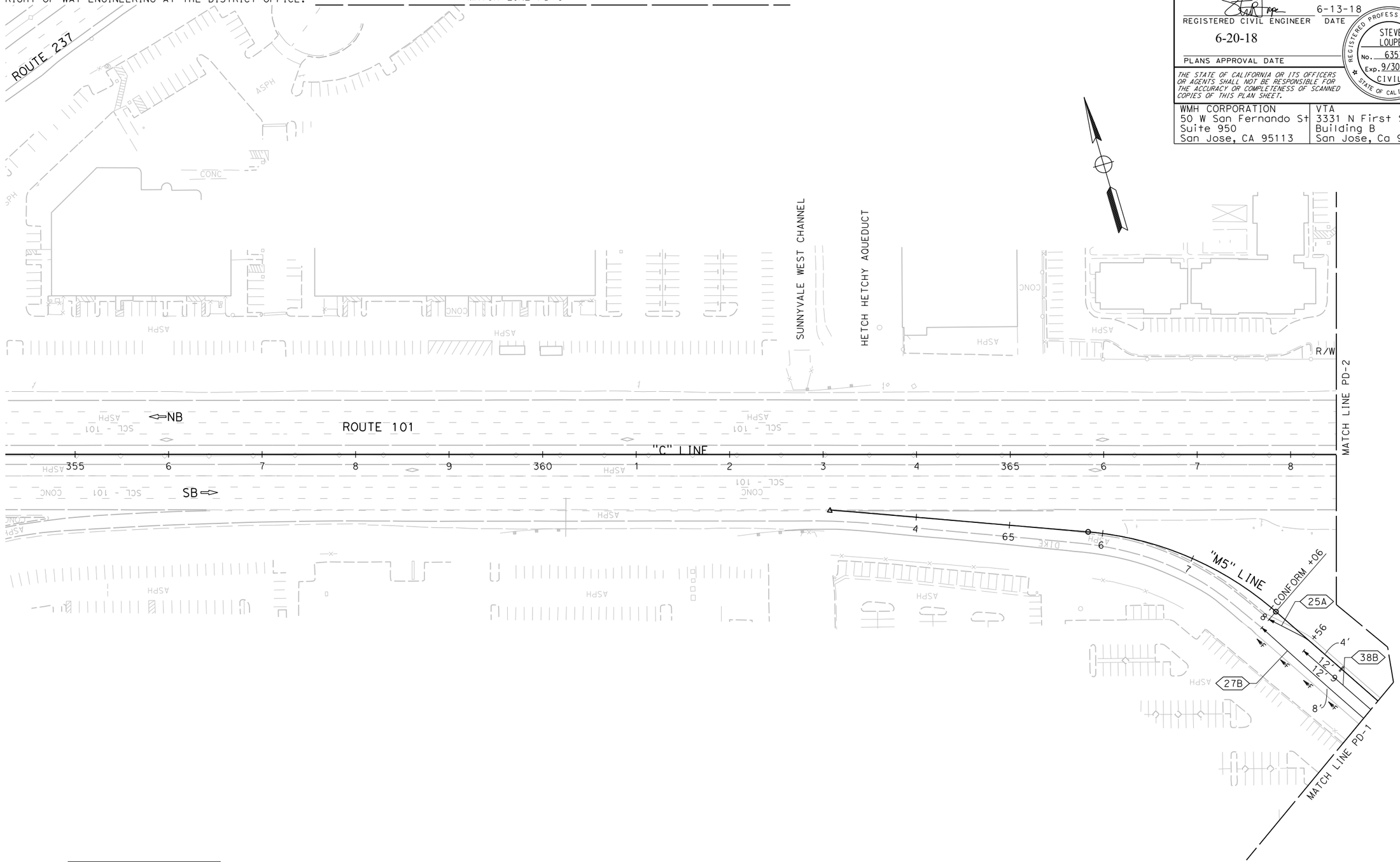

FOR NOTES AND LEGEND, SEE SHEET PD-1

PAVEMENT DELINEATION PLAN

SCALE: 1"=50'

APPROVED FOR PAVEMENT DELINEATION WORK ONLY

PD-5

REVISED BY	DATE REVISED	CALCULATED-DESIGNED BY	CHECKED BY
EF	05/03/18	EILI FARAH	STEVE LOUPE
EF	08/10/17		

CONSULTANT FUNCTIONAL SUPERVISOR: TIMOTHY J. LEE

STATE OF CALIFORNIA - DEPARTMENT OF TRANSPORTATION

Caltrans

X:\237_101_Mathilda\000_CAD\Sheets\NA-Pavmt_Delin\NA-Plans\0413000204na005.dgn

LAST REVISION 01-15-18 DATE PLOTTED => 6/20/2018 TIME PLOTTED => 11:17:50 AM

NOTE:

FOR ACCURATE RIGHT OF WAY DATA, CONTACT
RIGHT OF WAY ENGINEERING AT THE DISTRICT OFFICE.

Dist	COUNTY	ROUTE	POST MILES TOTAL PROJECT	SHEET No.	TOTAL SHEETS
04	SCL	101,237	45.2/45.8, 2.7/3.3	268	736

REGISTERED CIVIL ENGINEER — DATE: 6-13-18

PLANS APPROVAL DATE: 6-20-18

REGISTERED PROFESSIONAL ENGINEER — STEVE LOUPE — No. 63575 — Exp. 9/30/18 — CIVIL — STATE OF CALIFORNIA

THE STATE OF CALIFORNIA OR ITS OFFICERS OR AGENTS SHALL NOT BE RESPONSIBLE FOR THE ACCURACY OR COMPLETENESS OF SCANNED COPIES OF THIS PLAN SHEET.

WMH CORPORATION 50 W San Fernando St Suite 950 San Jose, CA 95113	VTA 3331 N First St Building B San Jose, Ca 95134

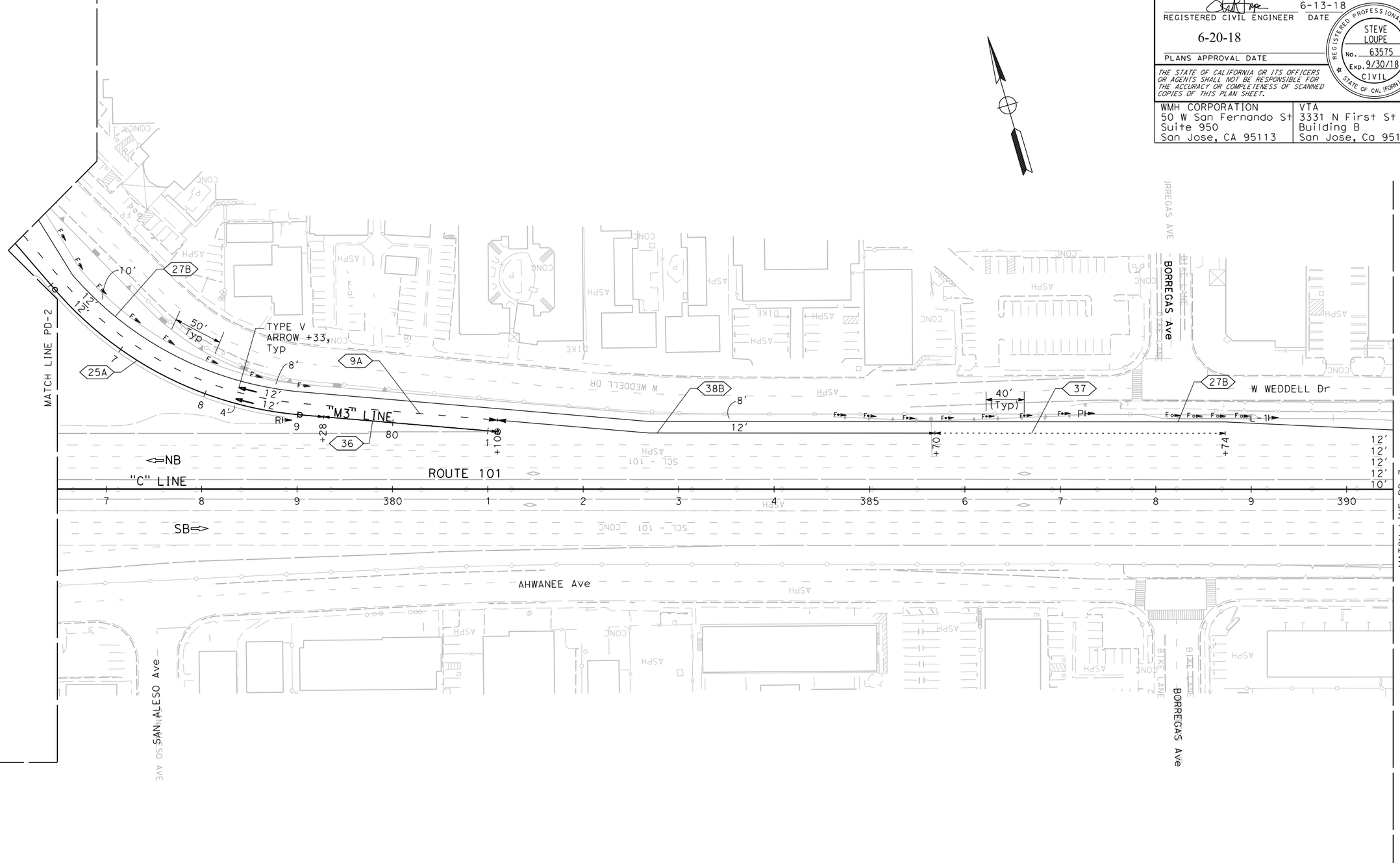

FOR NOTES AND LEGEND, SEE SHEET PD-1

APPROVED FOR PAVEMENT DELINEATION WORK ONLY

PAVEMENT DELINEATION PLAN

SCALE: 1"=50′

PD-6

REVISED BY	DATE REVISED
EF	07/21/17
EF	05/03/18

CALCULATED-DESIGNED BY: EILI FARAH
CHECKED BY: STEVE LOUPE

CONSULTANT FUNCTIONAL SUPERVISOR: TIMOTHY J. LEE

STATE OF CALIFORNIA - DEPARTMENT OF TRANSPORTATION

LAST REVISION: 01-15-18
DATE PLOTTED => 6/20/2018
TIME PLOTTED => 11:17:53 AM

X:\237_101_Morhilde\000_CAD\Sheets\NA-Pavmt_Delin\NA-Pavmt_Delin\0413000204na006.dgn

BORDER LAST REVISED 7/2/2010 | USERNAME => Eilif | DGN FILE => 0413000204na006.dgn | RELATIVE BORDER SCALE IS IN INCHES 0 1 2 3 | UNIT 0000 | PROJECT NUMBER & PHASE 0413000204

NOTE:

FOR ACCURATE RIGHT OF WAY DATA, CONTACT
RIGHT OF WAY ENGINEERING AT THE DISTRICT OFFICE.

Dist	COUNTY	ROUTE	POST MILES TOTAL PROJECT	SHEET No.	TOTAL SHEETS
04	SCL	101,237	45.2/45.8, 2.7/3.3	269	736

REGISTERED CIVIL ENGINEER — DATE: 6-13-18

PLANS APPROVAL DATE: 6-20-18

REGISTERED PROFESSIONAL ENGINEER — STEVE LOUPE — No. 63575 — Exp. 9/30/18 — CIVIL — STATE OF CALIFORNIA

THE STATE OF CALIFORNIA OR ITS OFFICERS OR AGENTS SHALL NOT BE RESPONSIBLE FOR THE ACCURACY OR COMPLETENESS OF SCANNED COPIES OF THIS PLAN SHEET.

WMH CORPORATION 50 W San Fernando St Suite 950 San Jose, CA 95113	VTA 3331 N First St Building B San Jose, Ca 95134

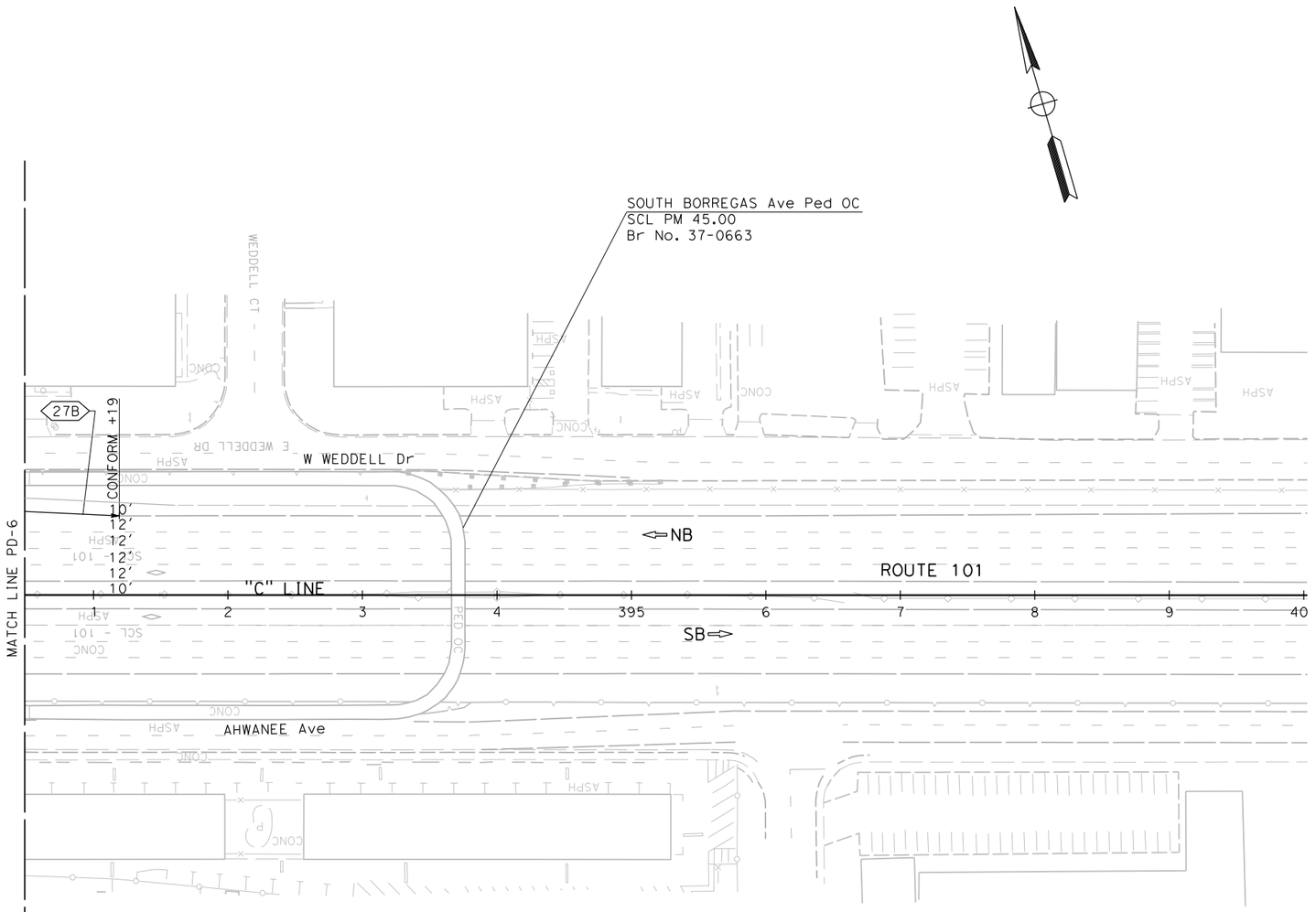

FOR NOTES AND LEGEND,
SEE SHEET PD-1

APPROVED FOR PAVEMENT DELINEATION WORK ONLY

PAVEMENT DELINEATION PLAN

SCALE: 1"=50'

PD-7

CALCULATED-DESIGNED BY	EILI FARAH
CHECKED BY	STEVE LOUPE
SUPERVISOR	TIMOTHY J. LEE
CONSULTANT FUNCTIONAL SUPERVISOR	

REVISED BY	DATE REVISED
EF	07/21/17
EF	05/03/18

STATE OF CALIFORNIA - DEPARTMENT OF TRANSPORTATION

Caltrans

LAST REVISION 01-15-18 | DATE PLOTTED => 6/20/2018 | TIME PLOTTED => 11:17:56 AM

X:\237_101_Mathilda\000_CAD\Sheets\VA-Pavmt_Delin\VA-Plans\0413000204na007.dgn

BORDER LAST REVISED 7/2/2010 | USERNAME => Eilif | DGN FILE => 0413000204na007.dgn | RELATIVE BORDER SCALE IS IN INCHES 0 1 2 3 | UNIT 0000 | PROJECT NUMBER & PHASE 0413000204

NOTE:

FOR ACCURATE RIGHT OF WAY DATA, CONTACT
RIGHT OF WAY ENGINEERING AT THE DISTRICT OFFICE.

Dist	COUNTY	ROUTE	POST MILES TOTAL PROJECT	SHEET No.	TOTAL SHEETS
04	SCL	101,237	45.2/45.8, 2.7/3.3	270	736

REGISTERED CIVIL ENGINEER — DATE: 6-13-18

6-20-18
PLANS APPROVAL DATE

STEVE LOUPE No. 63575 Exp. 9/30/18 CIVIL — REGISTERED PROFESSIONAL ENGINEER — STATE OF CALIFORNIA

THE STATE OF CALIFORNIA OR ITS OFFICERS OR AGENTS SHALL NOT BE RESPONSIBLE FOR THE ACCURACY OR COMPLETENESS OF SCANNED COPIES OF THIS PLAN SHEET.

WMH CORPORATION	VTA
50 W San Fernando St Suite 950 San Jose, CA 95113	3331 N First St Building B San Jose, Ca 95134

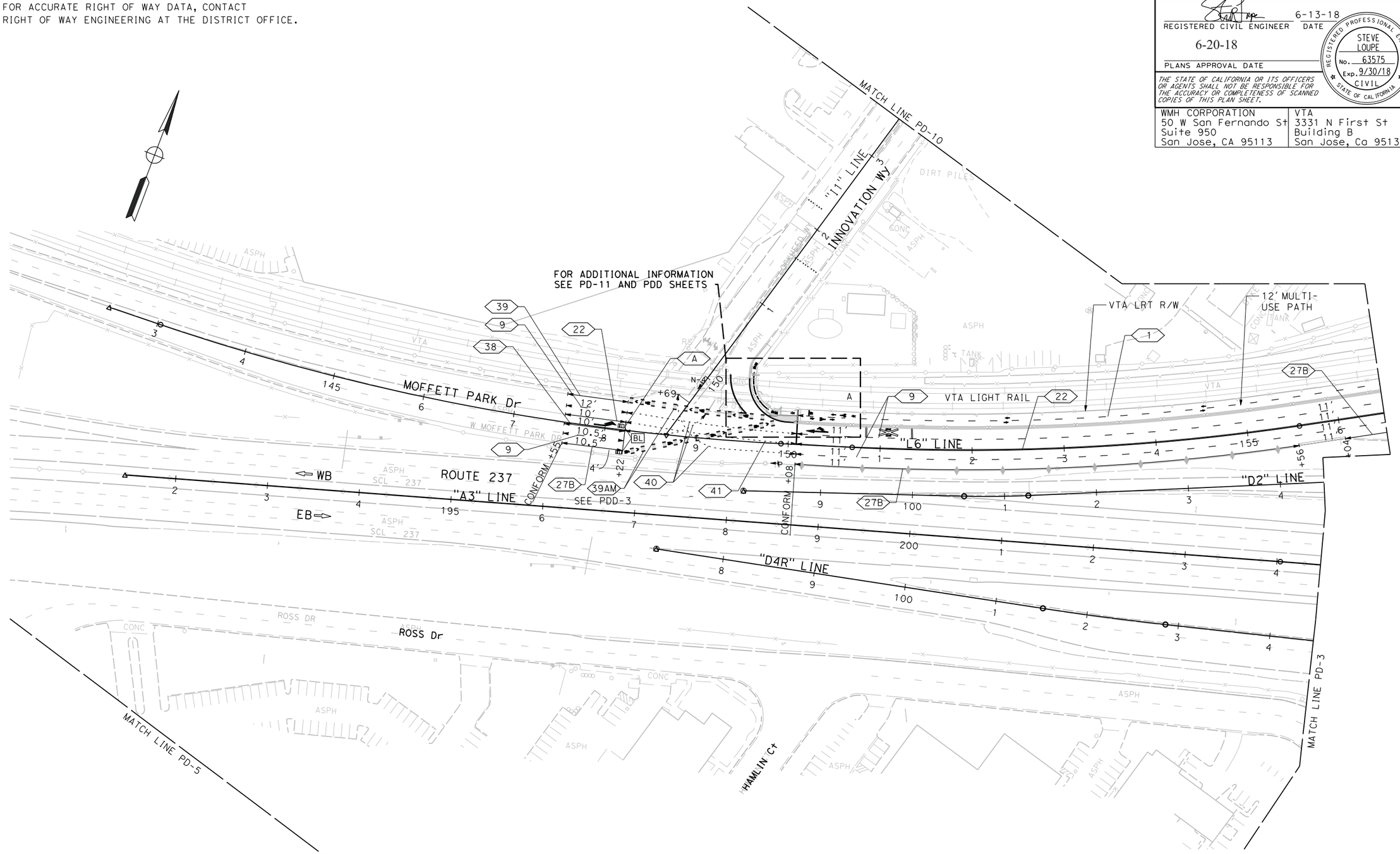

FOR NOTES AND LEGEND,
SEE SHEET PD-1

APPROVED FOR PAVEMENT DELINEATION WORK ONLY

PAVEMENT DELINEATION PLAN

SCALE: 1"=50'

PD-8

REVISED BY	EF	EF	EF
DATE REVISED	05/03/18	07/21/17	07/21/17

EILI FARAH — CALCULATED-DESIGNED BY
STEVE LOUPE — CHECKED BY
TIMOTHY J. LEE — CONSULTANT FUNCTIONAL SUPERVISOR

STATE OF CALIFORNIA - DEPARTMENT OF TRANSPORTATION

X:\237_101_Mathilda\000_CAD\Sheets\NA-Pavmt_Delin\NA-Plans\0413000204na008.dgn

LAST REVISION 01-15-18 | DATE PLOTTED => 9/17/2018 | TIME PLOTTED => 8:56:23 PM

BORDER LAST REVISED 7/2/2010 | USERNAME => sloupe | DGN FILE => 0413000204na008.dgn | RELATIVE BORDER SCALE IS IN INCHES 0 1 2 3 | UNIT 0000 | PROJECT NUMBER & PHASE 0413000204

NOTE:

FOR ACCURATE RIGHT OF WAY DATA, CONTACT
RIGHT OF WAY ENGINEERING AT THE DISTRICT OFFICE.

Dist	COUNTY	ROUTE	POST MILES TOTAL PROJECT	SHEET No.	TOTAL SHEETS
04	SCL	101,237	45.2/45.8, 2.7/3.3	271	736

REGISTERED CIVIL ENGINEER — DATE: 6-13-18

6-20-18
PLANS APPROVAL DATE

STEVE LOUPE No. 63575 Exp. 9/30/18 CIVIL — REGISTERED PROFESSIONAL ENGINEER — STATE OF CALIFORNIA

THE STATE OF CALIFORNIA OR ITS OFFICERS OR AGENTS SHALL NOT BE RESPONSIBLE FOR THE ACCURACY OR COMPLETENESS OF SCANNED COPIES OF THIS PLAN SHEET.

WMH CORPORATION 50 W San Fernando St Suite 950 San Jose, CA 95113	VTA 3331 N First St Building B San Jose, Ca 95134

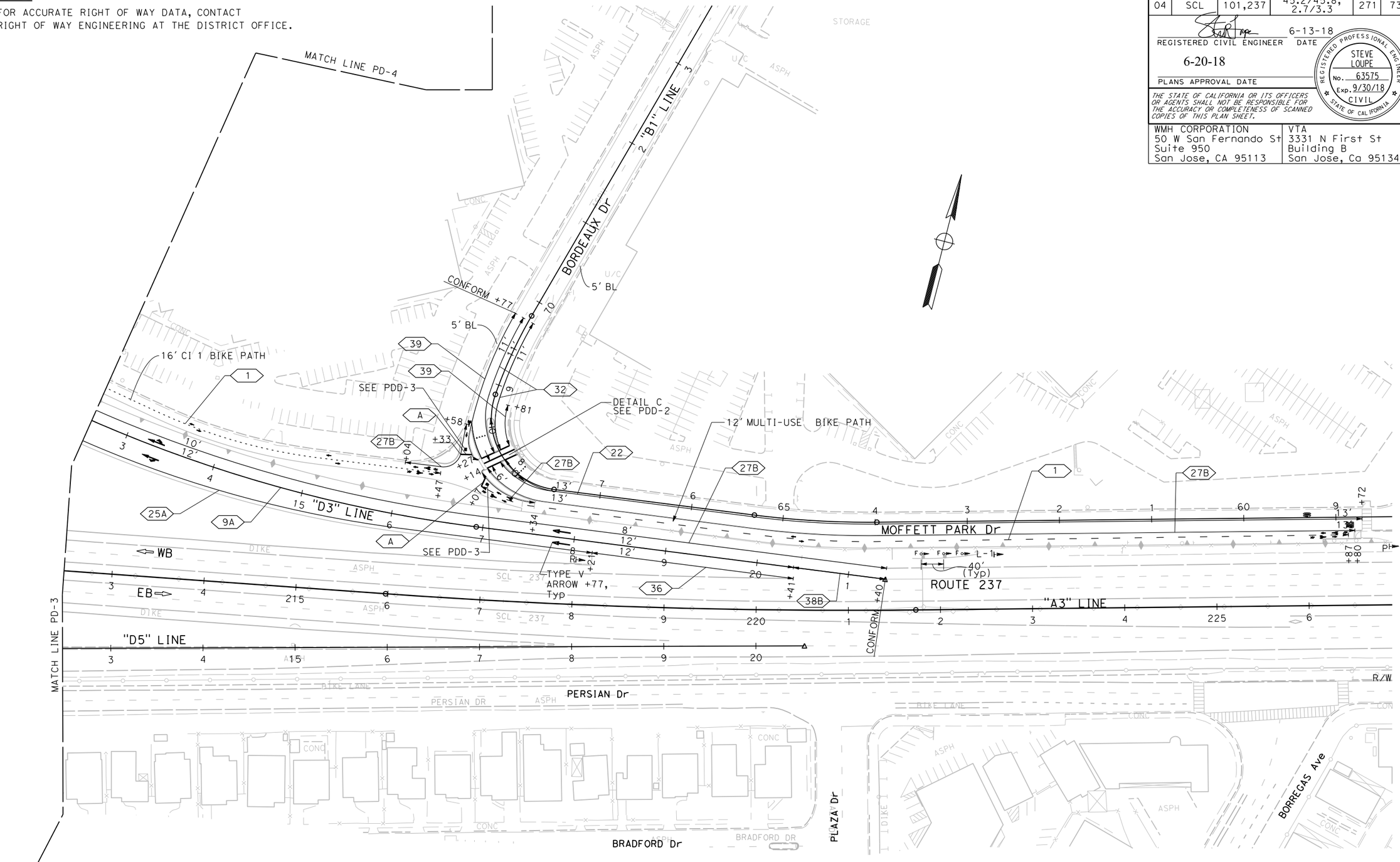

FOR NOTES AND LEGEND, SEE SHEET PD-1

APPROVED FOR PAVEMENT DELINEATION WORK ONLY

PAVEMENT DELINEATION PLAN

SCALE: 1"=50'

PD-9

LAST REVISION — DATE PLOTTED => 6/20/2018; TIME PLOTTED => 11:18:02 AM
01-15-18

CALCULATED-DESIGNED BY	EILI FARAH	REVISED BY	EF
CHECKED BY	STEVE LOUPE	DATE REVISED	07/21/17 05/03/18

STATE OF CALIFORNIA - DEPARTMENT OF TRANSPORTATION
CONSULTANT FUNCTIONAL SUPERVISOR: TIMOTHY J. LEE

X:\237_101_Mathilda\000_CAD\Sheets\MA-Pavmt_Delin\MA-Plans\04130002O4na009.dgn

BORDER LAST REVISED 7/2/2010 | USERNAME => Eilif | DGN FILE => 0413000204na009.dgn | RELATIVE BORDER SCALE IS IN INCHES 0 1 2 3 | UNIT 0000 | PROJECT NUMBER & PHASE 0413000204

Dist	COUNTY	ROUTE	POST MILES TOTAL PROJECT	SHEET No.	TOTAL SHEETS
04	SCL	101,237	45.2/45.8, 2.7/3.3	272	736

REGISTERED CIVIL ENGINEER 6-13-18 DATE

6-20-18
PLANS APPROVAL DATE

REGISTERED PROFESSIONAL ENGINEER STEVE LOUPE No. 63575 Exp. 9/30/20 CIVIL STATE OF CALIFORNIA

THE STATE OF CALIFORNIA OR ITS OFFICERS OR AGENTS SHALL NOT BE RESPONSIBLE FOR THE ACCURACY OR COMPLETENESS OF SCANNED COPIES OF THIS PLAN SHEET.

WMH CORPORATION
50 W San Fernando St
Suite 950
San Jose, CA 95113

VTA
3331 N First St
Building B
San Jose, Ca 95134

NOTE:

FOR ACCURATE RIGHT OF WAY DATA, CONTACT RIGHT OF WAY ENGINEERING AT THE DISTRICT OFFICE.

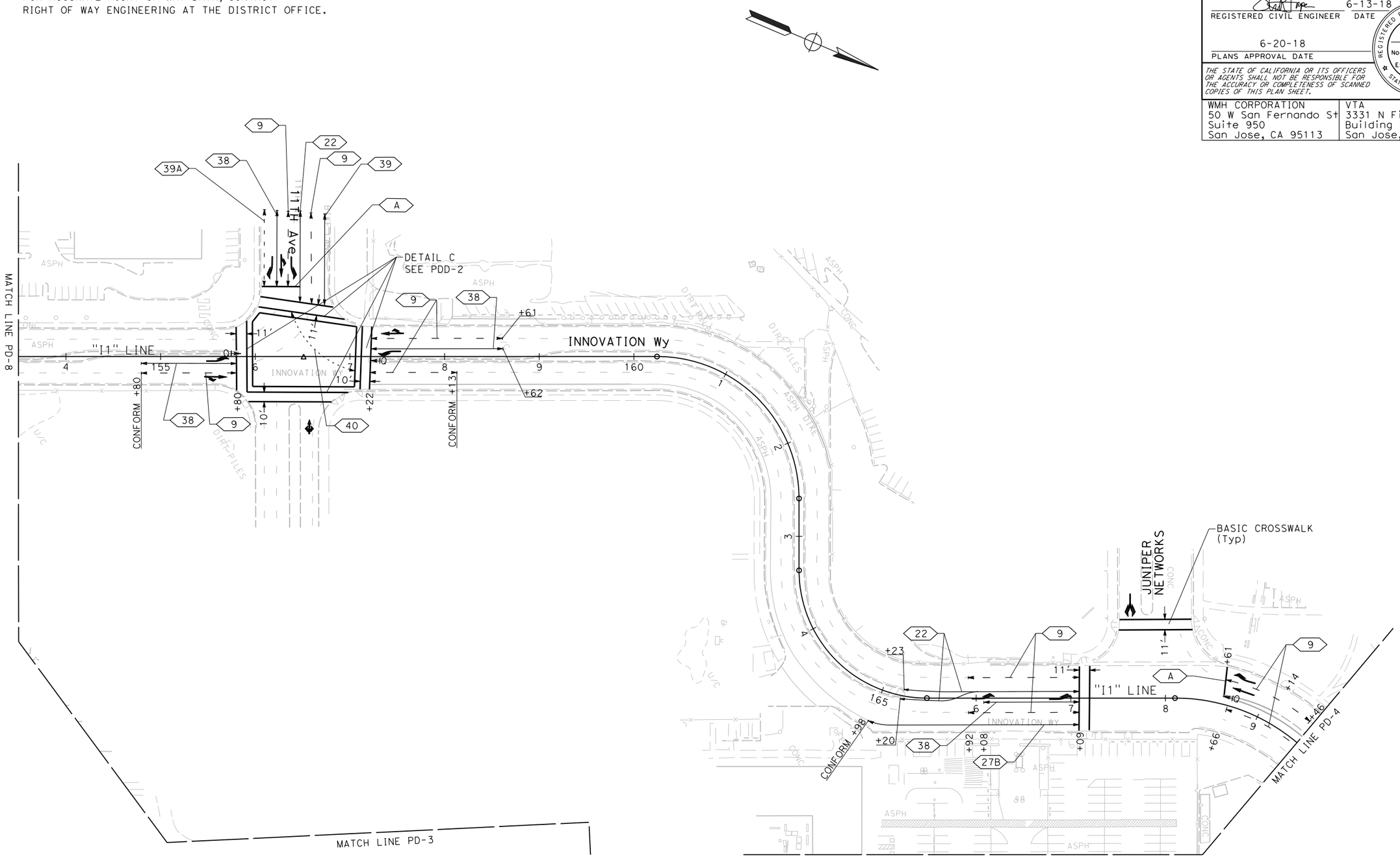

FOR NOTES AND LEGEND, SEE SHEET PD-1

APPROVED FOR PAVEMENT DELINEATION WORK ONLY

PAVEMENT DELINEATION PLAN

SCALE: 1"=50'

PD-10

STATE OF CALIFORNIA - DEPARTMENT OF TRANSPORTATION
Caltrans

CONSULTANT FUNCTIONAL SUPERVISOR: TIMOTHY J. LEE
CALCULATED-DESIGNED BY: EILI FARAH
CHECKED BY: STEVE LOUPE
REVISED BY: EF
DATE REVISED: 08/10/17
EF: 05/03/18

X:\237_101_Mathilda\000_CAD\Sheets\000_Submittals\Conformed Plans\0413000204na010.dgn

LAST REVISION 01-15-18
DATE PLOTTED => 12/18/2018
TIME PLOTTED => 1:24:11 PM

BORDER LAST REVISED 7/2/2010
USERNAME => sloupe
DGN FILE => 0413000204na010.dgn
RELATIVE BORDER SCALE IS IN INCHES 0 1 2 3
UNIT 0000
PROJECT NUMBER & PHASE 0413000204

NOTE:

-FOR ACCURATE RIGHT OF WAY DATA, CONTACT RIGHT OF WAY ENGINEERING AT THE DISTRICT OFFICE.
-FOR ADDITIONAL INFORMATION SEE PD-8, PDD SHEETS AND GC2

Dist	COUNTY	ROUTE	POST MILES TOTAL PROJECT	SHEET No.	TOTAL SHEETS
04	SCL	101,237	45.2/45.8, 2.7/3.3	273	736

REGISTERED CIVIL ENGINEER — DATE 6-13-18

PLANS APPROVAL DATE 6-20-18

STEVE LOUPE No. 63575 Exp. 9/30/18 CIVIL — REGISTERED PROFESSIONAL ENGINEER — STATE OF CALIFORNIA

THE STATE OF CALIFORNIA OR ITS OFFICERS OR AGENTS SHALL NOT BE RESPONSIBLE FOR THE ACCURACY OR COMPLETENESS OF SCANNED COPIES OF THIS PLAN SHEET.

WMH CORPORATION 50 W San Fernando St Suite 950 San Jose, CA 95113	VTA 3331 N First St Building B San Jose, Ca 95134

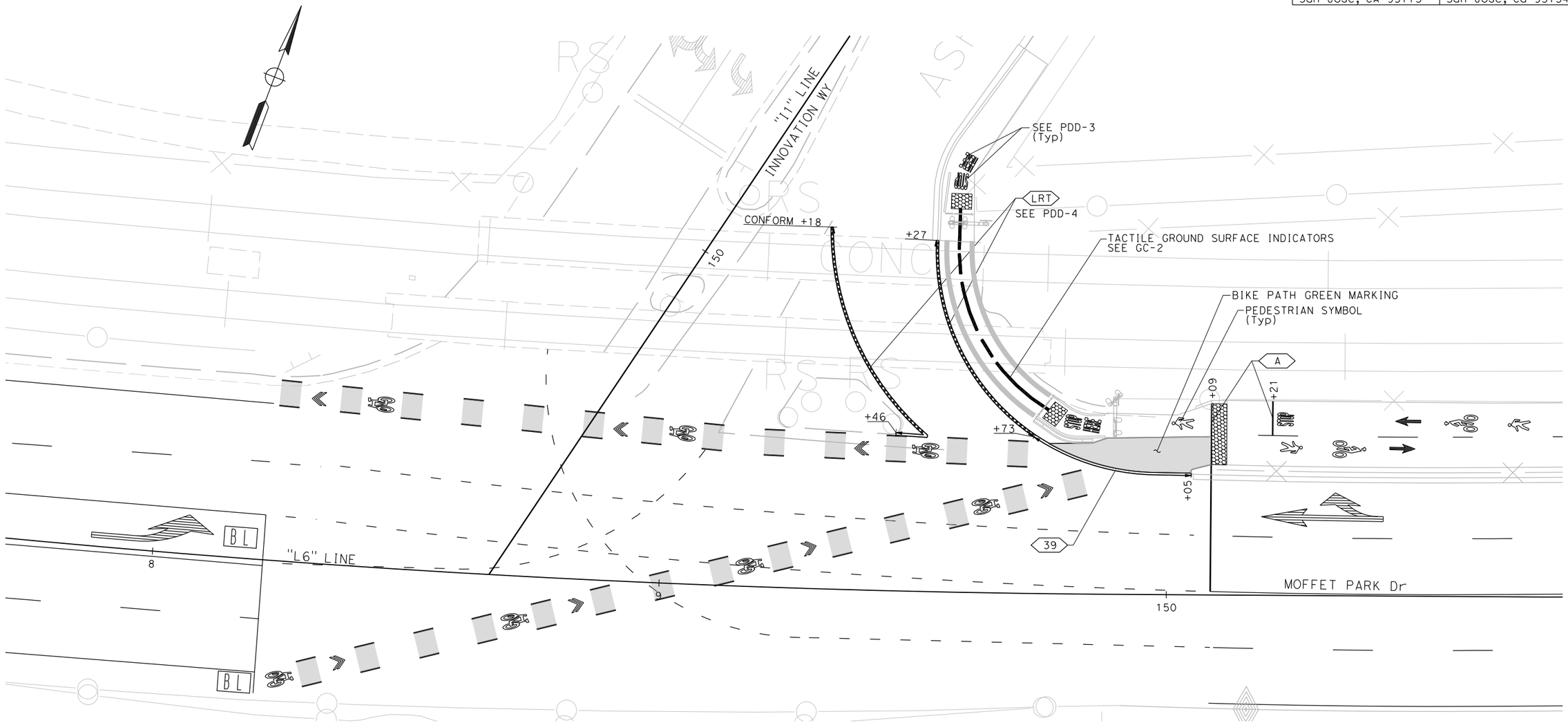

FOR NOTES AND LEGEND, SEE SHEET PD-1

APPROVED FOR PAVEMENT DELINEATION WORK ONLY

PAVEMENT DELINEATION PLAN

SCALE: 1"=10'

PD-11

STATE OF CALIFORNIA - DEPARTMENT OF TRANSPORTATION	CONSULTANT FUNCTIONAL SUPERVISOR	CALCULATED-DESIGNED BY	
Caltrans	TIMOTHY J. LEE	CHECKED BY	
	EILI FARAH	REVISED BY	EF
	STEVE LOUPE	DATE REVISED	08/10/17
			EF 05/03/18

LAST REVISION 01-15-18
DATE PLOTTED => 6/20/2018
TIME PLOTTED => 11:18:09 AM

X:\237_101_Mathilda\000_CAD\Sheets\NA-Pavmt_Delin\NA-Plans\0413000204na011.dgn

BORDER LAST REVISED 7/2/2010 | USERNAME => Eilif | DGN FILE => 0413000204na011.dgn | RELATIVE BORDER SCALE IS IN INCHES 0 1 2 3 | UNIT 0000 | PROJECT NUMBER & PHASE 0413000204

Dist	COUNTY	ROUTE	POST MILES TOTAL PROJECT	SHEET No.	TOTAL SHEETS
04	SCL	101,237	45.2/45.8, 2.7/3.3	274	736

REGISTERED CIVIL ENGINEER 6-13-18 DATE

6-20-18

PLANS APPROVAL DATE

REGISTERED PROFESSIONAL ENGINEER STEVE LOUPE No. 63575 Exp. 9/30/18 CIVIL STATE OF CALIFORNIA

THE STATE OF CALIFORNIA OR ITS OFFICERS OR AGENTS SHALL NOT BE RESPONSIBLE FOR THE ACCURACY OR COMPLETENESS OF SCANNED COPIES OF THIS PLAN SHEET.

WMH CORPORATION
50 W San Fernando St
Suite 950
San Jose, CA 95113

VTA
3331 N First St
Building B
San Jose, Ca 95134

NOTE:

FOR DETAILS NOT SHOWN, SEE CT 2015 REVISED STANDARD PLANS A20A-A20E AND STANDARD PLANS A24A-A24F.

ABBREVIATION:

M: MODIFIED

SPECIAL PAVEMENT MARKINGS

BIKE BOX

CROSSWALK LADDER

39AM
GREEN BIKE LANE

PAVEMENT DELINEATION DETAILS

NO SCALE

PDD-1

CALCULATED-DESIGNED BY	EILI FARAH
CHECKED BY	STEVE LOUPE
REVISED BY	EF
DATE REVISED	05/03/18
CONSULTANT FUNCTIONAL SUPERVISOR	TIMOTHY J. LEE

STATE OF CALIFORNIA - DEPARTMENT OF TRANSPORTATION

Caltrans®

X:\237_101_Mathilda\000_CAD\Sheets\NA-Pavmt_Delin\NB-Details\0413000204nb001.dgn

LAST REVISION 01-15-18

DATE PLOTTED => 6/20/2018
TIME PLOTTED => 11:18:01 AM

Dist	COUNTY	ROUTE	POST MILES TOTAL PROJECT	SHEET No.	TOTAL SHEETS
04	SCL	101,237	45.2/45.8, 2.7/3.3	275	736

REGISTERED CIVIL ENGINEER — 6-13-18 DATE

6-20-18
PLANS APPROVAL DATE

REGISTERED PROFESSIONAL ENGINEER — STEVE LOUPE — No. 63575 — Exp. 9/30/18 — CIVIL — STATE OF CALIFORNIA

THE STATE OF CALIFORNIA OR ITS OFFICERS OR AGENTS SHALL NOT BE RESPONSIBLE FOR THE ACCURACY OR COMPLETENESS OF SCANNED COPIES OF THIS PLAN SHEET.

WMH CORPORATION 50 W San Fernando St Suite 950 San Jose, CA 95113	VTA 3331 N First St Building B San Jose, Ca 95134

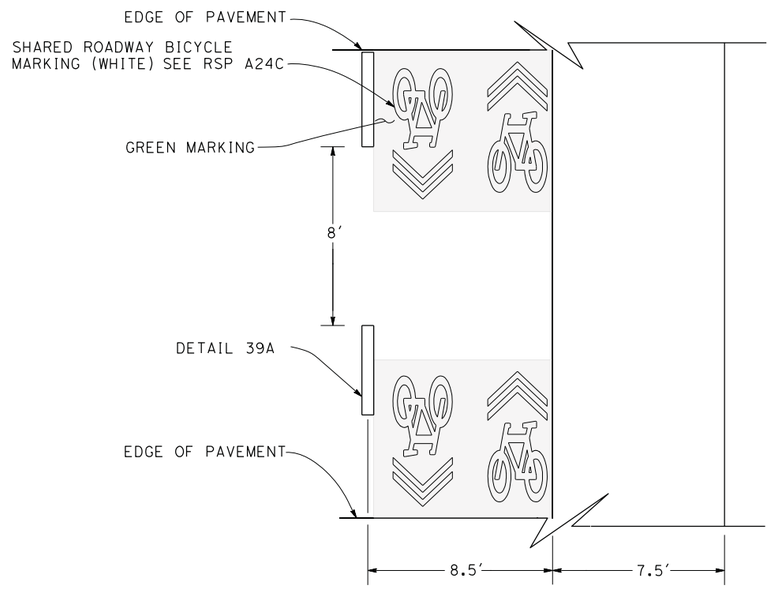

DETAIL A

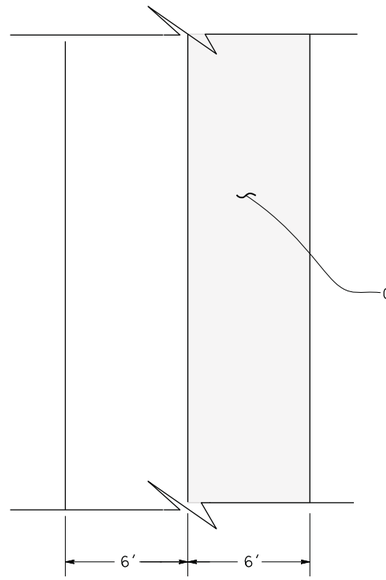

DETAIL B

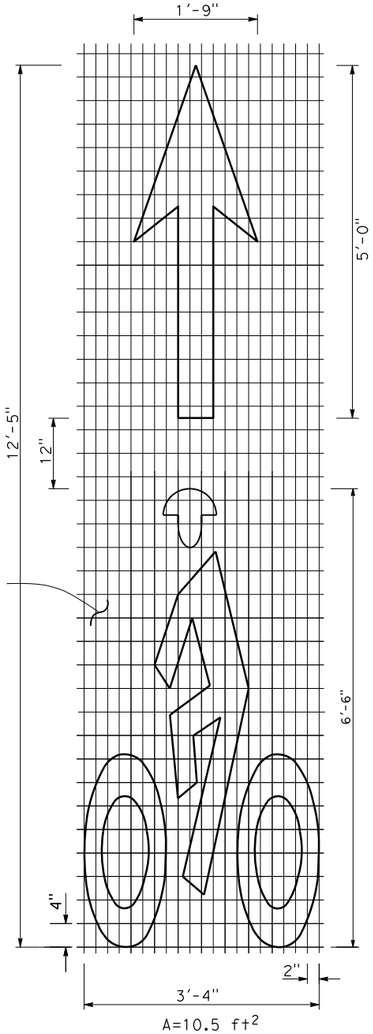

BIKE LANE MARKING Mod

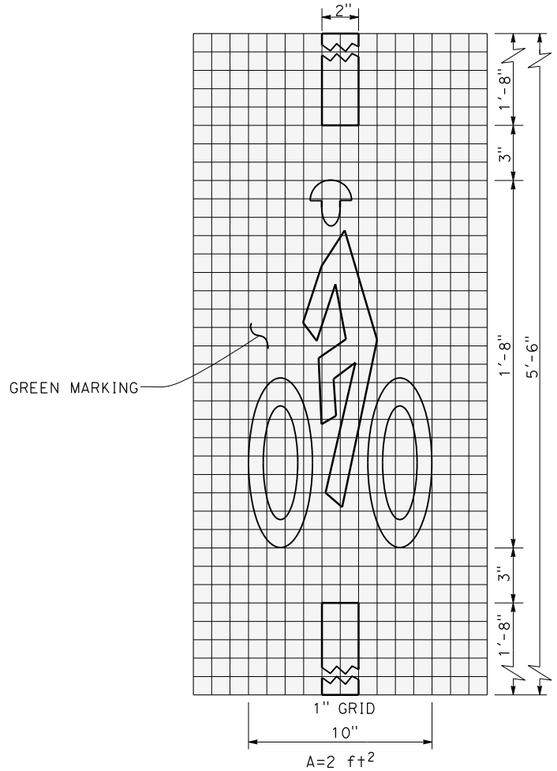

BICYCLE LOOP DETECTOR SYMBOL Mod

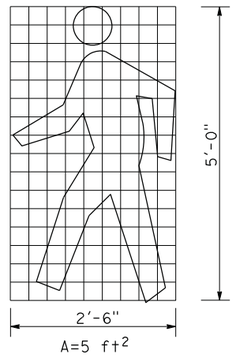

PEDESTRIAN SYMBOL

PAVEMENT DELINEATION DETAILS

NO SCALE

PDD-2

CALCULATED-DESIGNED BY	EILI FARAH	REVISED BY	EF
CHECKED BY	STEVE LOUPE	DATE REVISED	05/03/18

CONSULTANT FUNCTIONAL SUPERVISOR: TIMOTHY J. LEE

STATE OF CALIFORNIA - DEPARTMENT OF TRANSPORTATION

Caltrans®

LAST REVISION 01-15-18 | DATE PLOTTED => 6/28/2018 | TIME PLOTTED => 1:13:07 PM

X:\237_101_Mathilda\000_CAD\Sheets\VA-Pavmt_Delin\NB-Details\0413000204nb002.dgn

BORDER LAST REVISED 7/2/2010 | USERNAME => eilif | DGN FILE => 0413000204nb002.dgn | RELATIVE BORDER SCALE IS IN INCHES 0 1 2 3 | UNIT 0000 | PROJECT NUMBER & PHASE 0413000204

Dist	COUNTY	ROUTE	POST MILES TOTAL PROJECT	SHEET No.	TOTAL SHEETS
04	SCL	101,237	45.2/45.8, 2.7/3.3	276	736

REGISTERED CIVIL ENGINEER 6-13-18 DATE

6-20-18

PLANS APPROVAL DATE

REGISTERED PROFESSIONAL ENGINEER STEVE LOUPE No. 63575 Exp. 9/30/18 CIVIL STATE OF CALIFORNIA

THE STATE OF CALIFORNIA OR ITS OFFICERS OR AGENTS SHALL NOT BE RESPONSIBLE FOR THE ACCURACY OR COMPLETENESS OF SCANNED COPIES OF THIS PLAN SHEET.

WMH CORPORATION
50 W San Fernando St
Suite 950
San Jose, CA 95113

VTA
3331 N First St
Building B
San Jose, Ca 95134

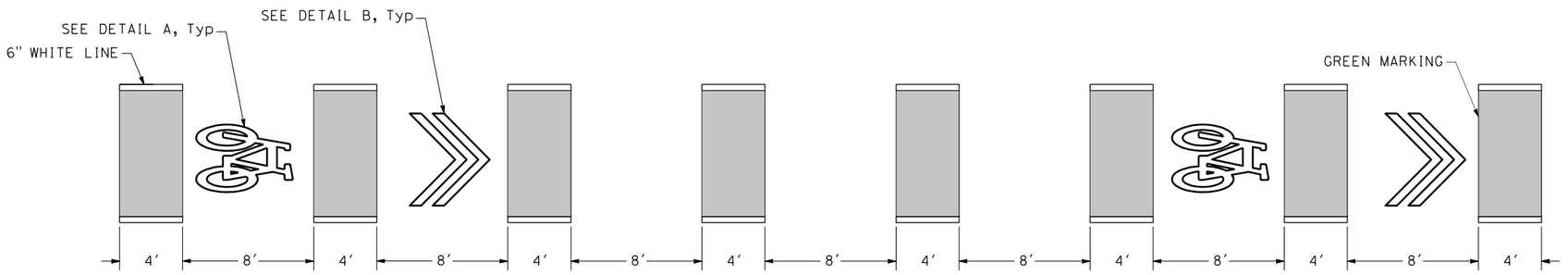

39A MODIFIED GREEN BIKE LANES AT "L6" 148+22 AND "L6" 150+09

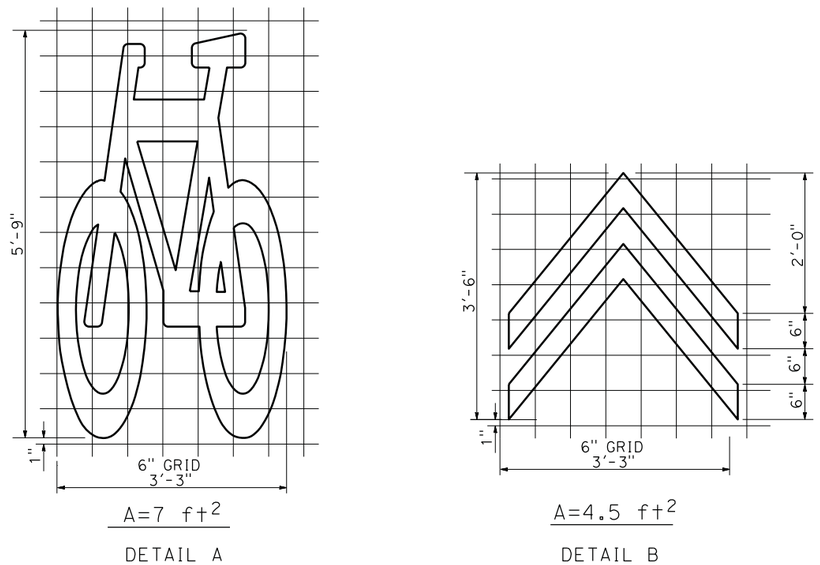

A=7 ft^2

DETAIL A

A=4.5 ft^2

DETAIL B

SHARED ROADWAY BICYCLE MARKING

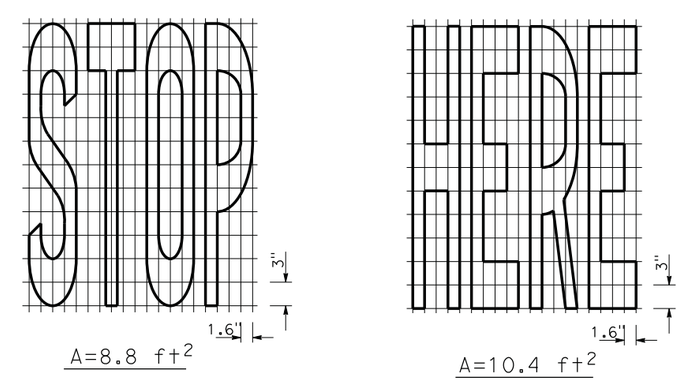

A=8.8 ft^2

A=10.4 ft^2

MULTI-USE PATH MARKING

PAVEMENT DELINEATION DETAILS

NO SCALE

PDD-3

STATE OF CALIFORNIA - DEPARTMENT OF TRANSPORTATION

Caltrans

CONSULTANT FUNCTIONAL SUPERVISOR: TIMOTHY J. LEE

CALCULATED-DESIGNED BY: EILI FARAH

CHECKED BY: STEVE LOUPE

REVISED BY: EF

DATE REVISED: 05/03/18

X:\237_101_Mathilda\000_CAD\Sheets\NA-Pavmt_Delin\NB-Details\0413000204nb003.dgn

LAST REVISION 01-15-18

DATE PLOTTED => 6/20/2018
TIME PLOTTED => 11:18:09 AM

BORDER LAST REVISED 7/2/2010

USERNAME => Eilif
DGN FILE => 0413000204nb003.dgn

RELATIVE BORDER SCALE IS IN INCHES 0 1 2 3

UNIT 0000

PROJECT NUMBER & PHASE 0413000204

NOTES:

1. DETAIL 12C IS MODIFIED PAVEMENT DELINEATION DETAIL 12.
2. DETAIL 29C IS MODIFIED PAVEMENT DELINEATION DETAIL 29.
3. DETAIL 37BC IS MODIFIED PAVEMENT DELINEATION DETAIL 37.
4. DETAIL 38C IS MODIFIED PAVEMENT DELINEATION DETAIL 38.
5. DETAIL 39C IS MODIFIED PAVEMENT DELINEATION DETAIL 39.
6. DETAIL 12C, 29C, 37BC, 38C, AND 39C ARE TO BE USED ON CONCRETE PAVEMENT SURFACES ONLY.
7. FOR DETAILS NOT SHOWN, SEE CT 2015 REVISED STANDARD PLANS A20A THROUGH A20E AND A24A THROUGH A24F.

LEGEND

- TYPE C RED-CLEAR RETROREFLECTIVE PAVEMENT MARKER
- TYPE G ONE-WAY CLEAR RETROREFLECTIVE PAVEMENT MARKER
- TYPE D TWO-WAY YELLOW RETROREFLECTIVE PAVEMENT MARKER
- TYPE RY RED-YELLOW RETROREFLECTIVE PAVEMENT MARKER
- WHITE THERMOPLASTIC TRAFFIC STRIPE
- CONTRAST PAVEMENT STRIPE BLACK PAINT (2-COAT)
- YELLOW THERMOPLASTIC TRAFFIC STRIPE

Dist	COUNTY	ROUTE	POST MILES TOTAL PROJECT	SHEET No.	TOTAL SHEETS
04	SCL	101,237	45.2/45.8, 2.7/3.3	277	736

REGISTERED CIVIL ENGINEER — DATE: 6-13-18

PLANS APPROVAL DATE: 6-20-18

REGISTERED PROFESSIONAL ENGINEER — STEVE LOUPE — No. 63575 — Exp. 9/30/18 — CIVIL — STATE OF CALIFORNIA

THE STATE OF CALIFORNIA OR ITS OFFICERS OR AGENTS SHALL NOT BE RESPONSIBLE FOR THE ACCURACY OR COMPLETENESS OF SCANNED COPIES OF THIS PLAN SHEET.

WMH CORPORATION
50 W San Fernando St
Suite 950
San Jose, CA 95113

VTA
3331 N First St
Building B
San Jose, Ca 95134

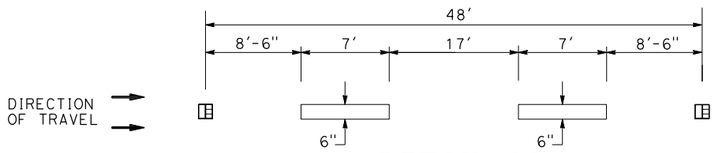

DETAIL 9A

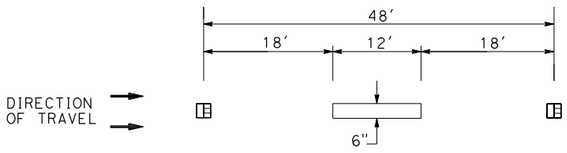

DETAIL 12A

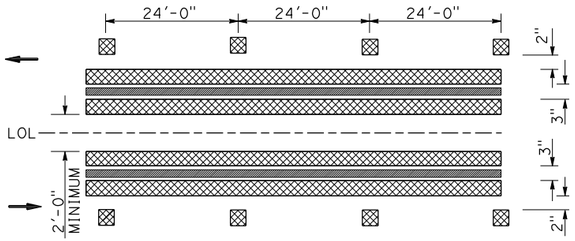

DETAIL 29C
(PCC PAVEMENT)

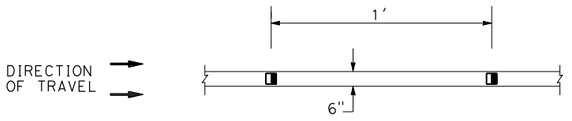

DETAIL LRT

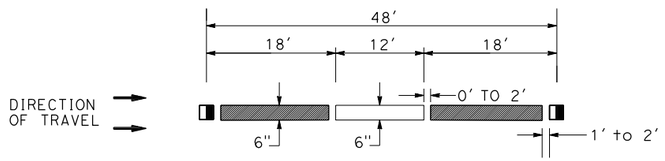

DETAIL 12C
(PCC PAVEMENT)

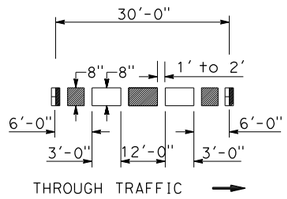

DETAIL 37BC
(PCC PAVEMENT)

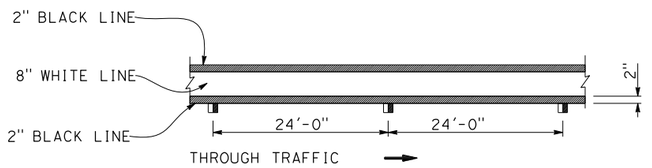

DETAIL 38C
(PCC PAVEMENT)

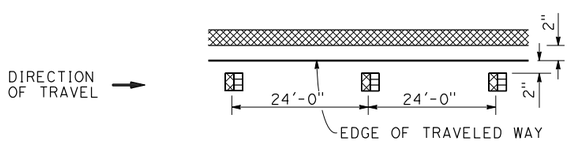

DETAIL 25A

DETAIL 38B

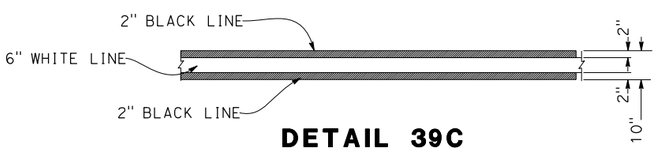

DETAIL 39C
(PCC PAVEMENT)

PAVEMENT DELINEATION DETAILS

NO SCALE

PDD-4

CALCULATED-DESIGNED BY	EF	REVISED BY
CHECKED BY	STEVE LOUPE	DATE REVISED 05/03/18
TIMOTHY J. LEE	CONSULTANT FUNCTIONAL SUPERVISOR	

STATE OF CALIFORNIA - DEPARTMENT OF TRANSPORTATION

Caltrans

X:\237_101_Mathilda\000_CAD\Sheets\NA-Pavmt_Delin\NB-Details\V0413000204nb004.dgn

LAST REVISION 01-15-18 | DATE PLOTTED => 6/20/2018 | TIME PLOTTED => 11:18:14 AM

BORDER LAST REVISED 7/2/2010 | USERNAME => Eilif | DGN FILE => 0413000204nb004.dgn | RELATIVE BORDER SCALE IS IN INCHES 0 1 2 3 | UNIT 0000 | PROJECT NUMBER & PHASE 0413000204

Dist	COUNTY	ROUTE	POST MILES TOTAL PROJECT	SHEET No.	TOTAL SHEETS
04	SCL	101,237	45.2/45.8, 2.7/3.3	278	736

REGISTERED CIVIL ENGINEER — 6-13-18 DATE

6-20-18
PLANS APPROVAL DATE

REGISTERED PROFESSIONAL ENGINEER — STEVE LOUPE — No. 63575 — Exp. 9/30/18 — CIVIL — STATE OF CALIFORNIA

THE STATE OF CALIFORNIA OR ITS OFFICERS OR AGENTS SHALL NOT BE RESPONSIBLE FOR THE ACCURACY OR COMPLETENESS OF SCANNED COPIES OF THIS PLAN SHEET.

WMH CORPORATION
50 W San Fernando St
Suite 950
San Jose, CA 95113

VTA
3331 N First St
Building B
San Jose, Ca 95134

PAVEMENT DELINEATION QUANTITIES

SHEET No.	LOCATION/STATION	DIRECTION	DETAIL No.	THERMOPLASTIC TRAFFIC STRIPE (ENHANCED WET NIGHT VISIBILITY)										TRAFFIC CONTRAST STRIPE BLACK PAINT (2-COAT)				PAVEMENT MARKER			
				6" YELLOW	6" WHITE	8" WHITE	6" YELLOW	6" WHITE	6" YELLOW	6" WHITE	6" WHITE	6" WHITE	8" WHITE	6" BLACK	8" BLACK	6" BLACK	8" BLACK	RETROREFLECTIVE			
				SOLID			BROKEN 6-1	BROKEN 6-1	BROKEN 36-12	BROKEN 18-12	BROKEN 17-7	BROKEN 8-4	BROKEN 12-3	SOLID		BROKEN 18-12	BROKEN 12-3	TYPE C	TYPE D	TYPE RY	TYPE G
				LF														EA			
PD-1	"M1" 27+33 TO "M1" 28+05	Rt	39AM									144									
PD-1	"M1" 28+05 TO "M1" 29+95	Rt	39		380																
PD-1	"M1" 28+05 TO "M1" 29+95	Rt	38			190															9
PD-1	"M1" 28+84 TO "M1" 29+95	Rt	12							222											6
PD-1	"M1" 28+84 TO "M1" 29+95	Rt	38			222															12
PD-1	"M1" 29+50 TO "M1" 29+97	Rt	38			46															3
PD-1	"M1" 30+08 TO "M1" 31+66	Rt	39AM									318									
PD-1	AHWANEE Ave	Rt	22	114															7		
PD-1	AHWANEE Ave	Rt	38			64															5
PD-1	"M1" 31+12 TO "M1" 31+68	Rt	27B		57																
PD-1	"M1" 31+15 TO "M1" 37+99	Rt	12							1,372											30
PD-1	"M1" 31+15 TO "M1" 31+68	Rt	36			110												12			
PD-1 - PD-2	"M1" 31+66 TO "M1" 41+07	Rt	39		939																
PD-1 - PD-2	"M1" 50+66 TO "M1" 52+65	Lt	39A									198									
PD-1	"M1" 31+78 TO "M1" 35+04	Rt	25A	485																22	
PD-1	"M1" 35+04 TO "M1" 35+52	Rt	40					48													
PD-1	"M1" 35+52 TO "M1" 35+78	Rt	38A			26															
PD-1 - PD-2	"M1" 39+44 TO "M1" 41+07	Rt	12							364											9
PD-1	"M1" 30+08 TO "M1" 30+57	Rt, Lt	40					121													
PD-1	"M1" 30+42 TO "M1" 31+15	Rt, Lt	40					132													
PD-1	"M1" 28+82 TO "M1" 29+95	Lt	25A	113																6	
PD-1	"M1" 29+61 TO "M1" 29+95	Lt	25A	34																3	
PD-1	"M1" 29+61 TO "M1" 29+95	Lt	12							105											4
PD-1	"M1" 29+61 TO "M1" 29+95	Lt	39		68																
PD-1	ALMANOR Ave	Lt	38			58															4
PD-1	ALMANOR Ave	Lt	38			50															4
PD-1	ALMANOR Ave	Lt	22	82															6		
PD-1	"M1" 31+15 TO "M1" 32+66	Lt	39A									150									
PD-1	"M1" 31+15 TO "M1" 35+59	Lt	12							437											11
PD-1	"M1" 31+15 TO "M1" 37+51	Lt	12							1,272											28
PD-1	"M1" 31+15 TO "M1" 33+07	Lt	38			192															9
PD-1	"M1" 31+15 TO "M1" 37+99	Rt, Lt	25	685																16	
PD-1	"M1" 33+64 TO "M1" 37+99	Lt	25	435																11	
PD-1	"M1" 32+66 TO "M1" 37+55	Lt	39		491																
PD-1	"M1" 37+51 TO "M1" 38+08	Lt	40					76													
PD-1	"M1" 38+32 TO "M1" 39+24	Lt	40					125													
PD-1 - PD-2	"M1" 39+24 TO "M1" 41+07	Lt	39A									184									
PD-1 - PD-2	"M1" 39+24 TO "M1" 41+07	Lt	12							370											9
PD-1 - PD-2	"M1" 39+24 TO "M1" 41+07	Lt	29	1,104															27		
PD-1	"M5" 71+99 TO "M5" 73+27	Lt	38B			134												14			
PD-1	"M5" 71+99 TO "M5" 73+27	Lt	38B			129												13			
PD-1 - PD-5	"M5" 68+56 TO "M5" 73+27	Lt	38B			486												43			
PD-1 - PD-5	"M5" 68+06 TO "M1" 37+24	Lt	27B		615																
PD-1 - PD-5	"M5" 68+06 TO "M5" 73+27	CENTER	25A	521																23	
SUBTOTAL OF PDQ-1				3,573	2,550	1,707		502		4,142		994						82	40	81	143

PAVEMENT DELINEATION QUANTITIES

PDQ-1

CALCULATED-DESIGNED BY	EILI FARAH
CHECKED BY	STEVE LOUPE
CONSULTANT FUNCTIONAL SUPERVISOR	TIMOTHY J. LEE

REVISED BY	DATE REVISED
EF	05/03/18

STATE OF CALIFORNIA - DEPARTMENT OF TRANSPORTATION
Caltrans

LAST REVISION 01-15-18
DATE PLOTTED => 7/23/2018
TIME PLOTTED => 9:23:48 AM

X:\237_101_Mathilda\000_CAD\Sheets\MA-Pavmt_Delin\NC-Quantities\0413000204nc001.dgn

BORDER LAST REVISED 7/2/2010 | USERNAME => eilif | DGN FILE => 0413000204nc001.dgn | RELATIVE BORDER SCALE IS IN INCHES 0 1 2 3 | UNIT 0000 | PROJECT NUMBER & PHASE 0413000204

Dist	COUNTY	ROUTE	POST MILES TOTAL PROJECT	SHEET No.	TOTAL SHEETS
04	SCL	101,237	45.2/45.8, 2.7/3.3	279	736

REGISTERED CIVIL ENGINEER — 6-13-18 DATE

6-20-18
PLANS APPROVAL DATE

REGISTERED PROFESSIONAL ENGINEER — STEVE LOUPE No. 63575 Exp. 9/30/18 CIVIL — STATE OF CALIFORNIA

THE STATE OF CALIFORNIA OR ITS OFFICERS OR AGENTS SHALL NOT BE RESPONSIBLE FOR THE ACCURACY OR COMPLETENESS OF SCANNED COPIES OF THIS PLAN SHEET.

WMH CORPORATION
50 W San Fernando St
Suite 950
San Jose, CA 95113

VTA
3331 N First St
Building B
San Jose, Ca 95134

PAVEMENT DELINEATION QUANTITIES

SHEET No.	LOCATION/STATION	DIRECTION	DETAIL No.	THERMOPLASTIC TRAFFIC STRIPE (ENHANCED WET NIGHT VISIBILITY)														PAVEMENT MARKER			
																		RETROREFLECTIVE			
				6" YELLOW	6" WHITE	8" WHITE	6" YELLOW	6" WHITE	6" YELLOW	6" WHITE	6" WHITE	6" WHITE	8" WHITE	6" BLACK	8" BLACK	6" BLACK	8" BLACK	TYPE C	TYPE D	TYPE RY	TYPE G
				SOLID			BROKEN 6-1	BROKEN 6-1	BROKEN 36-12	BROKEN 18-12	BROKEN 17-7	BROKEN 8-4	BROKEN 12-3	SOLID		BROKEN 18-12	BROKEN 12-3				
				LF														EA			
PD-1	"M6" 65+61 TO "M6" 65+99	Rt	40					39													
PD-1 - PD-2	"M6" 66+99 TO "M6" 68+82	Rt	43			261															
PD-1 - PD-2	"M6" 64+85 TO "M6" 68+82	CENTER	25A	396																18	
PD-1 - PD-2	"M6" 64+85 TO "M6" 65+61	Rt	25A	80																5	
PD-1 - PD-2	"M1" 39+57 TO "M6" 68+84	Rt	27B		400																
PD-2	"M1" 41+05 TO "M1" 43+04	Rt	39C		199									199							
PD-2	"M1" 41+06 TO "M1" 43+04	Rt	37BC										199				199				15
PD-2	"M1" 43+04 TO "M1" 43+47	Rt	38C			43									86						3
PD-2	"M1" 41+06 TO "M1" 43+48	Rt	12C							484						484					12
PD-2	"M1" 41+07 TO "M1" 43+49	Lt	39C		242									484							
PD-2	"M1" 41+08 TO "M1" 43+50	Lt	12C							484						484					11
PD-2	"M1" 41+07 TO "M1" 43+49	Lt	29C	1,936										968					44		
PD-2	"M1" 43+49 TO "M1" 45+28	Lt	29	1,488															33		
PD-2	"M1" 43+48 TO "M1" 45+27	Rt	12							358											9
PD-2	"M1" 43+48 TO "M1" 45+27	Rt	39		180																
PD-2	"M1" 44+04 TO "M1" 45+27	Rt	38			123															7
PD-2	"M1" 45+04 TO "M1" 46+12	Rt, Lt	40					162													
PD-2	"M1" 45+70 TO "M1" 46+35	Rt, Lt	41				105														
PD-2	"M1" 46+41 TO "M1" 46+82	Rt	40					52													
PD-2	"M1" 45+27 TO "M1" 46+82	Rt	39AM									312									
PD-2	"M1" 43+49 TO "M1" 45+04	Lt	12							310											8
PD-2	"M2" 67+90 TO "M2" 67+75	Lt	29	140															5		
PD-2 - PD3	"M1" 46+83 TO "M1" 52+83	Rt	12							1,200											26
PD-2 - PD3	"M1" 50+46 TO "M1" 52+83	Rt	38			237															11
PD-2 - PD3	"M1" 50+46 TO "M1" 52+83	Rt	37B										237								18
PD-2 - PD3	"M1" 50+98 TO "M1" 52+83	Rt	27B		190																
PD-2 - PD3	"M1" 50+98 TO "M1" 52+83	Rt	39		370																
PD-2 - PD3	"M1" 50+98 TO "M1" 52+83	Rt	38			370															18
PD-2	"M1" 46+82 TO "M1" 50+46	Rt	12							363											9
PD-2	"M1" 46+82 TO "M1" 49+98	Rt	39		316																
PD-2	"M1" 49+98 TO "M1" 50+98	Rt	39AM									200									
PD-2	"M1" 46+82 TO "M1" 49+86	Rt	25	303																8	
PD-2 - PD3	M1" 43+51 TO "M1" 62+73	Lt	39		922																
PD-2	"M1" 46+35 TO "M1" 50+00	Lt	38			365															17
PD-2 - PD3	"M1" 46+35 TO "M1" 52+83	Lt	12							1,296											28
PD-2 - PD3	"M1" 50+57 TO "M1" 52+83	Lt	25	226																6	
PD-2	"M2" 69+07 TO "M2" 72+25	Rt	43			292															
PD-2	"M2" 68+02 TO "C" 371+19	Rt, Lt	27B		853																
PD-2	"M2" 68+02 TO "M2" 72+98	CENTER	25A	498																22	
PD-2	"M2" 68+00 TO "M2" 68+69	Rt	25A	73																5	
PD-2	"M2" 68+69 TO "M2" 69+07	Rt	40					38													
PD-2	"M2" 72+98 TO "C" 373+41	Rt	38			170															9
PD-2	"M1" 47+07 TO "M1" 49+98	Rt	39A									291									
SUBTOTAL OF PDQ-2				5,140	3,672	1,861	105	291		4,495		803	436	1,651	86	968	199		82	64	201

PAVEMENT DELINEATION QUANTITIES

PDQ-2

LAST REVISION 01-15-18
DATE PLOTTED => 7/23/2018
TIME PLOTTED => 9:23:54 AM

	REVISED BY	DATE REVISED
	EF	05/03/18

CALCULATED-DESIGNED BY: EILI FARAH
CHECKED BY: STEVE LOUPE
CONSULTANT FUNCTIONAL SUPERVISOR: TIMOTHY J. LEE

STATE OF CALIFORNIA - DEPARTMENT OF TRANSPORTATION
Caltrans

X:\237_101_Mathilda\000_CAD\Sheets\NA-Pavmt_Delin\NC-Quantities\0413000204nc002.dgn

BORDER LAST REVISED 7/2/2010 | USERNAME => eilif | DGN FILE => 0413000204nc002.dgn | RELATIVE BORDER SCALE IS IN INCHES 0 1 2 3 | UNIT 0000 | PROJECT NUMBER & PHASE 0413000204

Dist	COUNTY	ROUTE	POST MILES TOTAL PROJECT	SHEET No.	TOTAL SHEETS
04	SCL	101,237	45.2/45.8, 2.7/3.3	280	736

REGISTERED CIVIL ENGINEER — 6-13-18 DATE

6-20-18
PLANS APPROVAL DATE

REGISTERED PROFESSIONAL ENGINEER — STEVE LOUPE — No. 63575 — Exp. 9/30/18 — CIVIL — STATE OF CALIFORNIA

THE STATE OF CALIFORNIA OR ITS OFFICERS OR AGENTS SHALL NOT BE RESPONSIBLE FOR THE ACCURACY OR COMPLETENESS OF SCANNED COPIES OF THIS PLAN SHEET.

WMH CORPORATION
50 W San Fernando St
Suite 950
San Jose, CA 95113

VTA
3331 N First St
Building B
San Jose, Ca 95134

PAVEMENT DELINEATION QUANTITIES

SHEET No.	LOCATION/STATION	DIRECTION	DETAIL No.	THERMOPLASTIC TRAFFIC STRIPE (ENHANCED WET NIGHT VISIBILITY)														PAVEMENT MARKER			
																		RETROREFLECTIVE			
				6" YELLOW	6" WHITE	8" WHITE	6" YELLOW	6" WHITE	6" YELLOW	6" WHITE	6" WHITE	6" WHITE	8" WHITE	6" BLACK	8" BLACK	6" BLACK	8" BLACK	TYPE C	TYPE D	TYPE RY	TYPE G
				SOLID			BROKEN 6-1	BROKEN 6-1	BROKEN 36-12	BROKEN 18-12	BROKEN 17-7	BROKEN 8-4	BROKEN 12-3	SOLID		BROKEN 18-12	BROKEN 12-3				
				LF														EA			
PD-2, PD-6	"M3" 72+08 TO "M3" 72+96	Rt, Lt	38B			88												10			
PD-2, PD-6	"M3" 72+08 TO "M3" 72+80	Rt, Lt	38B			72												8			
PD-2, PD-6	"M3" 72+08 TO "M3" 75+32	Rt, Lt	38B			346												31			
PD-2, PD-6	"M3" 72+96 TO "C" 381+10	Lt	9A								814							18			
PD-2, PD-7	"M3" 72+04 TO "C" 391+19	Lt	27B		2,182																
PD-2, PD-6	"M3" 72+04 TO "M3" 79+28	Rt, Lt	25A	723																32	
PD-3	ROSS DR.	Rt	38			75															7
PD-3	ROSS DR.	Rt	22	48															4		
PD-3	"D5" 6+06 TO "D5" 9+60	Rt	25A	354																16	
PD-3	"D5" 8+65 TO "D5" 9+61	Lt	25A	111																6	
PD-3	"D5" 6+13 TO "D5" 10+37	Lt	27B		404																
PD-3	"D5" 8+49 TO "D5" 10+37	Rt	27B		199																
PD-4	"D5" 9+61 TO "D5" 10+38	CENTER	38			77															5
PD-3	"D5" 5+66 TO "D5" 5+96	Rt	38			30															3
PD-3	"D5" 6+06 TO "D5" 7+38	Rt	38			132															7
PD-3	"D5" 5+53 TO "D5" 6+85	Rt	39		131																
PD-3	"D5" 5+53 TO "D5" 6+85	Rt	22	264															13		
PD-3	"D5" 5+66 TO "D5" 6+06	Rt	39A									53									
PD-3	"D5" 6+06 TO "D5" 6+60	Rt	39		54																
PD-3	"M1" 53+93 TO "M1" 56+04	Rt	12							422											10
PD-3	"M1" 53+93 TO "M1" 56+04	Rt	38			422															20
PD-3	"M1" 54+04 TO "M1" 56+04	Rt	39		200																
PD-3	"M1" 52+92 TO "M1" 54+04	Rt	39A									224									
PD-3	"M1" 54+00 TO "M1" 65+04	Rt	25A	207																10	
PD-3	"M1" 54+01 TO "M1" 65+04	Lt	25A	203																10	
PD-3	"M1" 54+00 TO "M1" 54+36	Rt	36			74												9			
PD-3	"M1" 54+04 TO "M1" 56+04	Rt	27B		200																
PD-3	"M1" 56+12 TO "M1" 57+30	Rt	40					250													
PD-3	"M1" 57+16 TO "M1" 57+39	Rt	41				78														
PD-3	"M1" 56+32 TO "M1" 57+30	Rt, Lt	40					166													
PD-3	"M1" 57+30 TO "M1" 60+27	Rt	38			594															27
PD-3	"M1" 57+30 TO "M1" 60+27	Rt	12							594											14
PD-3	"M1" 57+30 TO "M1" 61+12	Rt	39		382																
PD-3	"M1" 62+02 TO "M1" 63+91	Rt	12							189											5
PD-3 - PD-4	"M1" 62+02 TO "M1" 71+07	Rt	12							920											21
PD-3 - PD-4	"M1" 62+02 TO "M1" 69+38	Rt	39		753																
PD-3 - PD-4	"M1" 64+57 TO "M1" 69+38	Rt	39		497																
PD-3 - PD-4	"M1" 63+91 TO "M1" 69+23	Rt	37B										644								45
PD-3 - PD-4	"M1" 63+86 TO "M1" 71+33	Rt	38			753															33
PD-3 - PD-4	"M1" 64+97 TO "M1" 71+33	Rt	38			646															28
SUBTOTAL OF PDQ-3				1,910	5,002	3,309	78	416		2,125	814	277	644					76	17	74	225

CALCULATED-DESIGNED BY: EILI FARAH
CHECKED BY: STEVE LOUPE
CONSULTANT FUNCTIONAL SUPERVISOR: TIMOTHY J. LEE
REVISED BY: EF
DATE REVISED: 05/03/18

STATE OF CALIFORNIA - DEPARTMENT OF TRANSPORTATION
Caltrans

X:\237_101_Morhilo\000_CAD\Sheets\NA-Pavmt_Delin\NC-Quantities\0413000204nc003.dgn

PAVEMENT DELINEATION QUANTITIES

PDQ-3

LAST REVISION: 01-15-18
DATE PLOTTED => 7/23/2018
TIME PLOTTED => 9:23:56 AM

BORDER LAST REVISED 7/2/2010
USERNAME => eilif
DGN FILE => 0413000204nc003.dgn
RELATIVE BORDER SCALE IS IN INCHES 0 1 2 3
UNIT 0000
PROJECT NUMBER & PHASE 0413000204

Dist	COUNTY	ROUTE	POST MILES TOTAL PROJECT	SHEET No.	TOTAL SHEETS
04	SCL	101,237	45.2/45.8, 2.7/3.3	281	736

REGISTERED CIVIL ENGINEER — 6-13-18 DATE

6-20-18
PLANS APPROVAL DATE

REGISTERED PROFESSIONAL ENGINEER — STEVE LOUPE — No. 63575 — Exp. 9/30/18 — CIVIL — STATE OF CALIFORNIA

THE STATE OF CALIFORNIA OR ITS OFFICERS OR AGENTS SHALL NOT BE RESPONSIBLE FOR THE ACCURACY OR COMPLETENESS OF SCANNED COPIES OF THIS PLAN SHEET.

WMH CORPORATION
50 W San Fernando St
Suite 950
San Jose, CA 95113

VTA
3331 N First St
Building B
San Jose, Ca 95134

PAVEMENT DELINEATION QUANTITIES

SHEET No.	LOCATION/STATION	DIRECTION	DETAIL No.	THERMOPLASTIC TRAFFIC STRIPE (ENHANCED WET NIGHT VISIBILITY)														PAVEMENT MARKER			
																		RETROREFLECTIVE			
				6" YELLOW	6" WHITE	8" WHITE	6" YELLOW	6" WHITE	6" YELLOW	6" WHITE	6" WHITE	6" WHITE	8" WHITE	6" BLACK	8" BLACK	6" BLACK	8" BLACK	TYPE C	TYPE D	TYPE RY	TYPE G
				SOLID			BROKEN 6-1	BROKEN 6-1	BROKEN 36-12	BROKEN 18-12	BROKEN 17-7	BROKEN 8-4	BROKEN 12-3	SOLID		BROKEN 18-12	BROKEN 12-3				
				LF														EA			
PD-3	"D3" 9+91 TO "D3" 12+50	R†	38B			259												24			
PD-3	"D3" 9+91 TO "D3" 12+50	CENTER,R†	38B			258												24			
PD-3, PD-9	"D3" 10+37 TO "D3" 16+47	L†	1								596										
PD-3, PD-9	"D3" 9+93 TO "D3" 21+40	L†	27B		1,148																
PD-3, PD-9	"D3" 9+91 TO "D3" 28+21	L†	25A	837																36	
PD-3	"M1" 53+93 TO "M1" 56+04	L†	12							404											10
PD-3	"M1" 53+93 TO "M1" 56+04	L†	38			202															10
PD-3	"M1" 53+93 TO "M1" 55+69	L†	39A									168									
PD-3	"M1" 53+93 TO "M1" 55+69	L†	27B		168																
PD-3	"D4R" 105+42 TO "D4R" 106+60	R†	27B		132																
PD-3	"D4R" 105+74 TO "D4R" 107+21	R†	38			551															24
PD-3	"D4R" 106+10 TO "D4R" 106+87	R†	38B			80												9			
PD-3	"D4R" 105+42 TO "D4R" 106+07	R†	9A								65							2			
PD-3	"D4R" 105+42 TO "D4R" 105+74	R†	9A								32							2			
PD-3	"D4R" 105+42 TO "D4R" 106+07	CENTER	25A	65																4	
PD-3	"M1" 57+03 TO "M1" 59+86	L†	38			284															13
PD-3	"M1" 57+03 TO "M1" 60+01	L†	12							299											8
PD-3	"M1" 57+03 TO "M1" 59+92	L†	12							290											8
PD-3	"M1" 57+03 TO "M1" 59+12	L†	39		222																
PD-3	"D2" 107+14 TO "D2" 107+92	R†	9A								78							3			
PD-3	"D2" 107+14 TO "D2" 108+48	R†	27B		149																
PD-3	"D2" 107+15 TO "D2" 108+18	L†	25A	166																8	
PD-3	"D2" 107+92 TO "D2" 108+26	L†	25A	43																3	
PD-3	"M1" 60+27 TO "M1" 60+95	R†, L†	40					139													
PD-3	"M1" 59+92 TO "M1" 61+25	R†, L†	40					188													
PD-3	"M1" 60+54 TO "M1" 61+86	R†, L†	41				161														
PD-3	"M1" 60+00 TO "M1" 61+86	L†	39AM									372									
PD-3 - PD-8	"L6" 156+04 TO "L6" 160+09	R†	27B		469																
PD-3 - PD-8	"L6" 150+09 TO "L6" 159+56	R†	9								949										21
PD-3 - PD-8	"L6" 150+09 TO "L6" 160+62	R†	22	2,596															111		
PD-3 - PD-8	"L6" 150+09 TO "L6" 160+63	L†	9								1,052										23
PD-3 - PD-8	"L6" 150+09 TO "L6" 161+23	L†	1								1,123										
PD-3	"L6" 159+56 TO "L6" 160+35	L†	38			80															5
PD-3	"M1" 62+02 TO "M1" 63+52	L†	39A									150									
PD-3 - PD-4	"M1" 62+02 TO "M1" 71+08	L†	12							1,836											40
PD-3 - PD-4	"M1" 63+52 TO "M1" 71+08	L†	39		763																
PD-3	"M1" 59+61 TO "M1" 60+27	L†	29	588															15		
PD-3	"L6" 159+88 TO "L6" 160+66	R†	29	640															16		
PD-4	"M1" 69+38 TO "M1" 70+23	R†	39A									190									
PD-4	"M1" 70+23 TO "M1" 71+10	R†	39		178																
PD-4	"M1" 71+09 TO "M1" 72+94	R†, L†	40					158													
PD-4	"M1" 71+33 TO "M1" 73+04	R†	39AM									346									
PD-4	"M1" 71+80 TO "M1" 73+04	L†	39AM									246									
PD-4	"B1" 79+87 TO "B1" 81+01	L†	22	228															12		
SUBTOTAL OF PDQ-4				5,163	3,229	1,714	161	485		2,829	3,895	1,472						64	154	51	162

PAVEMENT DELINEATION QUANTITIES

PDQ-4

CALCULATED-DESIGNED BY	EILI FARAH	REVISED BY	EF
CHECKED BY	STEVE LOUPE	DATE REVISED	05/03/18
CONSULTANT FUNCTIONAL SUPERVISOR	TIMOTHY J. LEE		

STATE OF CALIFORNIA - DEPARTMENT OF TRANSPORTATION
Caltrans

LAST REVISION: 01-15-18
DATE PLOTTED => 7/23/2018
TIME PLOTTED => 9:23:58 AM

X:\237_101_Mathilde\000_CAD\Sheets\VA-Pavmt_Delin\NC-Quantities\04130002O4nc004.dgn

BORDER LAST REVISED 7/2/2010 | USERNAME => eilif | DGN FILE => 0413000204nc004.dgn | RELATIVE BORDER SCALE IS IN INCHES 0 1 2 3 | UNIT 0000 | PROJECT NUMBER & PHASE 0413000204

Dist	COUNTY	ROUTE	POST MILES TOTAL PROJECT	SHEET No.	TOTAL SHEETS
04	SCL	101,237	45.2/45.8, 2.7/3.3	282	736

REGISTERED CIVIL ENGINEER — 6-13-18 DATE

6-20-18
PLANS APPROVAL DATE

STEVE LOUPE No. 63575 Exp. 9/30/18 CIVIL — REGISTERED PROFESSIONAL ENGINEER — STATE OF CALIFORNIA

THE STATE OF CALIFORNIA OR ITS OFFICERS OR AGENTS SHALL NOT BE RESPONSIBLE FOR THE ACCURACY OR COMPLETENESS OF SCANNED COPIES OF THIS PLAN SHEET.

WMH CORPORATION
50 W San Fernando St
Suite 950
San Jose, CA 95113

VTA
3331 N First St
Building B
San Jose, Ca 95134

PAVEMENT DELINEATION QUANTITIES

SHEET No.	LOCATION/STATION	DIRECTION	DETAIL No.	THERMOPLASTIC TRAFFIC STRIPE (ENHANCED WET NIGHT VISIBILITY)														PAVEMENT MARKER			
																		RETROREFLECTIVE			
				6" YELLOW	6" WHITE	8" WHITE	6" YELLOW	6" WHITE	6" YELLOW	6" WHITE	6" WHITE	6" WHITE	8" WHITE	6" BLACK	8" BLACK	6" BLACK	8" BLACK	TYPE C	TYPE D	TYPE RY	TYPE G
				SOLID			BROKEN 6-1	BROKEN 6-1	BROKEN 36-12	BROKEN 18-12	BROKEN 17-7	BROKEN 8-4	BROKEN 12-3	SOLID		BROKEN 18-12	BROKEN 12-3				
				LF														EA			
PD-4	"B1" 79+35 TO "B1" 79+98	L†	27	272																6	
PD-4	"B1" 81+88 TO "B1" 82+72	L†	38			91															5
PD-4	"B1" 79+87 TO "B1" 80+87	R†	38			100															6
PD-4	"B1" 81+74 TO "B1" 82+72	R†	22	196															11		
PD-4	"B1" 82+72 TO "B1" 83+07	R†	27	180																6	
PD-4	"I2" 81+31 TO "I1" 81+41	R†, L†	41				47														
PD-4	"B1" 79+35 TO "B1" 81+01	L†	39		166																
PD-4	"B1" 79+35 TO "B1" 81+62	R†	39A									227									
PD-4	"B1" 81+62 TO "B1" 81+87	R†	39		25																
PD-4	"B1" 81+13 TO "B1" 81+63	R†, L†	39AM									200									
PD-4	"B1" 81+74 TO "B1" 83+13	R†	39		139																
PD-4	"B1" 81+88 TO "B1" 82+19	L†	39		25																
PD-4	"B1" 82+19 TO "B1" 83+10	L†	39A									91									
PD-4	"I2" 280+60 TO "I2" 280+95	L†	22	70															5		
PD-4	"I2" 280+60 TO "I2" 280+85	L†	39		25																
PD-4	"I2" 280+60 TO "I2" 280+99	L†	39		39																
PD-6	"M3" 79+28 TO "M3" 81+10	CENTER	36			183												18			
PD-6	"C" 381+10 TO "C' 385+70	L†	38B			460												41			
PD-6	"C" 385+70 TO "C" 388+74	L†	37										304					22			
PD-8	"L6" 147+55 TO "L6" 148+22	L†	39		66																
PD-8	"L6" 147+55 TO "L6" 148+22	R†	27B		66																
PD-8	"L6" 147+55 TO "L6" 148+22	R†, L†	9								132										5
PD-8	"L6" 147+56 TO "L6" 148+22	CENTER	38			66															4
PD-8	"L6" 147+55 TO "L6" 148+22	L†	22	132															8		
PD-8	"L6" 148+32 TO "L6" 139+08	L†	40					99													
PD-8	"L6" 148+77 TO "L6" 150+09	R†, L†	40					166													
PD-8	"L6" 148+22 TO "L6" 150+09	L†	40					188													
PD-8	"L6" 148+22 TO "L6" 150+09	L†	41				188														
PD-8	"L6" 150+08 TO "L6" 155+57	R†	27B		553																
PD-8	"L6" 148+22 TO "L6" 149+92	R†	39AM									362									
PD-8	"L6" 148+22 TO "L6" 149+92	L†	39AM									326									
PD-11	"I1" 150+18 TO "L6" 149+46	R†	LRT									105									46
PD-11	"I1" 150+27 TO "L6" 149+73	R†	LRT									90									45
PD-11	"L6" 149+73 TO "L6" 150+07	L†	39		64																
PD-9	"D3" 18+21 TO "D3" 20+41	R†	36			220												21			
PD-9	"B1" 68+27 TO "B1" 69+77	R†, L†	32						584										33		
PD-9	"B1" 58+81 TO "B1" 58+26	R†	39		45																
PD-9	"B1" 58+27 TO "B1" 59+77	L†	39		215																
PD-9	"B1" 58+72 TO "B1" 68+15	L†	22	2,022															87		
PD-9	"B1" 58+87 TO "B1" 68+80	L†	1								948										
PD-9	"B1" 58+87 TO "B1" 68+87	L†	27B		958																
PD-9	"D3" 16+04 TO "D3" 68+85	L†	27B		100																
PD-3 - PD-9	"D3" 12+50 TO "A3" 220+41	CENTER	9A								780							18			
SUBTOTAL OF PDQ-5				2,872	2,486	1,120	235	453	584		1,860	1,401	304					120	144	12	111

PAVEMENT DELINEATION QUANTITIES

PDQ-5

	EF	05/03/18		
	EILI FARAH	STEVE LOUPE		
CALCULATED-DESIGNED BY	CHECKED BY	CONSULTANT FUNCTIONAL SUPERVISOR		
		TIMOTHY J. LEE		

STATE OF CALIFORNIA - DEPARTMENT OF TRANSPORTATION — Caltrans

X:\237_101_Mathilda\000_CAD\Sheets\NA-Pavmt_Delin\NC-Quantities\0413000204nc005.dgn

LAST REVISION 01-15-18 — DATE PLOTTED => 7/23/2018 — TIME PLOTTED => 9:24:00 AM

BORDER LAST REVISED 7/2/2010 | USERNAME => eilif | DGN FILE => 0413000204nc005.dgn | RELATIVE BORDER SCALE IS IN INCHES 0 1 2 3 | UNIT 0000 | PROJECT NUMBER & PHASE 0413000204

Dist	COUNTY	ROUTE	POST MILES TOTAL PROJECT	SHEET No.	TOTAL SHEETS
04	SCL	101,237	45.2/45.8, 2.7/3.3	283	736

REGISTERED CIVIL ENGINEER — 6-13-18 DATE

6-20-18
PLANS APPROVAL DATE

REGISTERED PROFESSIONAL ENGINEER — STEVE LOUPE — No. 63575 — Exp. 9/30/18 — CIVIL — STATE OF CALIFORNIA

THE STATE OF CALIFORNIA OR ITS OFFICERS OR AGENTS SHALL NOT BE RESPONSIBLE FOR THE ACCURACY OR COMPLETENESS OF SCANNED COPIES OF THIS PLAN SHEET.

WMH CORPORATION
50 W San Fernando St
Suite 950
San Jose, CA 95113

VTA
3331 N First St
Building B
San Jose, Ca 95134

PAVEMENT DELINEATION QUANTITIES

SHEET No.	LOCATION/STATION	DIRECTION	DETAIL No.	THERMOPLASTIC TRAFFIC STRIPE (ENHANCED WET NIGHT VISIBILITY)														PAVEMENT MARKER			
				6" YELLOW SOLID	6" WHITE SOLID	8" WHITE SOLID	6" YELLOW BROKEN 6-1	6" WHITE BROKEN 6-1	6" YELLOW BROKEN 36-12	6" WHITE BROKEN 18-12	6" WHITE BROKEN 17-7	6" WHITE BROKEN 8-4	8" WHITE BROKEN 12-3	6" BLACK SOLID	8" BLACK SOLID	6" BLACK BROKEN 18-12	8" BLACK BROKEN 12-3	RETROREFLECTIVE TYPE C	RETROREFLECTIVE TYPE D	RETROREFLECTIVE TYPE RY	RETROREFLECTIVE TYPE G
				LF														EA			
PD-9	"A3" 154+80 TO "A3"2210+40	CENTER	38B			100												11			
PD-10	"I1" 154+80 TO "I1" 155+80	R†	9								101										4
PD-10	"I1" 154+80 TO "I1" 155+80	R†	38			101															6
PD-10	"I1" 167+22 TO "I1" 168+13	R†	9								91										3
PD-10	11TH Ave	L†	39A									82									
PD-10	11TH Ave	L†	38			80															5
PD-10	11TH Ave	L†	9								80										3
PD-10	11TH Ave	L†	22	192															10		
PD-10	11TH Ave	L†	9								96										3
PD-10	11TH Ave	L†	39		96																
PD-10	"I1" 167+22 TO "I1" 168+61	R†	9								139										4
PD-10	"I1" 167+22 TO "I1" 168+61	R†	38			139															7
PD-10-PD-4	"I1" 168+66 TO "I1" 169+55	R†	9								87										3
PD-10	"I1" 157+22 TO "I1" 158+62	L†	38			139															7
PD-10	"I1" 156+38 TO "I1" 157+09	L†, R†	40					89													
PD-10	"I1" 157+23 TO "I1" 158+61	L†	9								138										4
PD-10	"I1" 165+20 TO "I1" 167+09	L†	22	538															25		
PD-10	"I1" 165+92 TO "I1" 167+09	L†	9								117										4
PD-10	"I1" 164+98 TO "I1" 167+09	L†	27B		224																
PD-10	"I1" 168+58 TO "I1" 169+46	L†	9								100										4
SUBTOTAL OF PDQ-6				730	320	559		89			949	82						11	35		57
SUBTOTAL OF PDQ-1				3,573	2,550	1,707		502		4,142		994						82	40	81	143
SUBTOTAL OF PDQ-2				5,140	3,672	1,861	105	291		4,495		803	436	1,651	86	968	199		82	64	201
SUBTOTAL OF PDQ-3				1,910	5,002	3,309	78	416		2,125	814	277	644					76	17	74	225
SUBTOTAL OF PDQ-4				5,163	3,229	1,714	161	485		2,829	3,895	1,472						64	154	51	162
SUBTOTAL OF PDQ-5				2,872	2,486	1,120	235	453	584		1,860	1,401	304					120	144	12	111
FROM PAVEMENT MARKING QUANTITIES				687																	
GRAND TOTAL				37,334		10,270	2,815		584	13,591	7,518	5,029	1,384	1,651	86	968	199	2,006			

PAVEMENT DELINEATION QUANTITIES

PDQ-6

EILI FARAH	STEVE LOUPE	05/03/18
CALCULATED-DESIGNED BY	CHECKED BY	DATE REVISED
TIMOTHY J. LEE		REVISED BY
CONSULTANT FUNCTIONAL SUPERVISOR		EF

STATE OF CALIFORNIA - DEPARTMENT OF TRANSPORTATION

LAST REVISION 01-15-18 — DATE PLOTTED => 7/23/2018 — TIME PLOTTED => 9:24:01 AM

X:\237_101_Mathilde\000_CADSheets\NA-Pavmt_Delin\NC-Quantities\0413000204nc006.dgn

BORDER LAST REVISED 7/2/2010 | USERNAME => eilif | DGN FILE => 0413000204nc006.dgn | RELATIVE BORDER SCALE IS IN INCHES 0 1 2 3 | UNIT 0000 | PROJECT NUMBER & PHASE 0413000204

PAVEMENT MARKING QUANTITIES

SHEET No.	LOCATION/STATION	DIRECTION	PAVEMENT MARKING	THERMOPLASTIC PAVEMENT MARKING (ENHANCED WET NIGHT VISIBILITY)		GREEN PAVEMENT MARKING
				CROSSWALK AND PAVEMENT MARKING	6" WHITE/YELLOW	
				SQFT		
PD-1	"M1" 27+33 TO "M1" 28+07	L+	SHARROW	12		
	"M1" 29+00 TO "M1" 30+00	R+, L+	BIKE LANE MARKING Mod	21		69
	"M1" 28+00 TO "M1" 30+00	R+	"ONLY"	22		
	"M1" 28+00 TO "M1" 30+00	R+	"SB 101 ONLY"	50		
	"M1" 28+00 TO "M1" 30+00	R+	TYPE III (R) ARROW	42		
	"M1" 28+00 TO "M1" 30+00	L+	TYPE III (L) ARROW	42		
	"M1" 28+00 TO "M1" 30+00	R+	TYPE I (24') ARROW	124		
	"M1" 28+00 TO "M1" 30+00	R+, L+	BICYCLE LOOP DETECTOR SYMBOL Mod	4		19
	"M1" 31+00 TO "M1" 32+00	R+	12" WHITE CHEVRON	47		
	"M1" 31+00 TO "M1" 32+00	R+	12" WHITE DIAGONAL	18		
	"M1" 29+97 TO "M1" 30+08	R+, L+	BASIC CROSSWALK	288		
	"M1" 28+00 TO "M1" 30+00	R+	6" WHITE DIAGONAL		31	
	AHWANEE Ave	R+	BASIC CROSSWALK	172		
	AHWANEE Ave	R+, L+	BICYCLE LOOP DETECTOR SYMBOL Mod	8		38
	ALMANOR Ave	L+	LIMIT LINE	46		
	"M1" 31+15	L+	LIMIT LINE	60		
	"M1" 37+99	R+	LIMIT LINE	39		
	"M1" 39+24	L+	LIMIT LINE	39		
	"M5" 73+27	L+	LIMIT LINE	66		
	ALMANOR Ave	R+	LIMIT LINE	30		
	ALMANOR Ave	R+	BIKE LANE SYMBOL WITH PERSON	7		
	ALMANOR Ave	L+	TYPE III (L) ARROW	84		
	ALMANOR Ave	L+	TYPE II (R) ARROW	45		
	AHWANEE Ave	R+	TYPE III (R) ARROW	42		
	AHWANEE Ave	R+	TYPE III (L) ARROW	42		
	AHWANEE Ave	R+	TYPE I (24') ARROW	31		
	"M1" 30+00 TO "M1" 31+90	R+	GREEN PAVEMENT MARKING			260
	"M1" 30+00 TO "M1" 40+00	L+	BICYCLE LOOP DETECTOR SYMBOL Mod	8		38
	"M1" 27+33 TO "M1" 28+05	R+	GREEN PAVEMENT MARKING			120
	"M1" 31+00 TO "M1" 40+00	R+	TYPE I (24') ARROW	93		
	"M1" 31+01 TO "M1" 40+01	R+	DIAMOND	11		
	"M1" 31+00 TO "M1" 40+00	R+	"SB 101 ONLY"	50		
	"M1" 31+00 TO "M1" 40+00	R+, L+	BIKE LANE MARKING Mod	32		104
	"M1" 31+00 TO "M1" 40+00	L+	TYPE III (L) ARROW	84		
	"M1" 31+00 TO "M1" 40+00	L+	TYPE II (R) ARROW	90		
	"M1" 33+00 TO "M1" 36+00	R+	12" YELLOW DIAGONAL	75		
	"M5" 70+00 TO "M5" 73+27	R+	TYPE III (R) ARROW	126		
	"M5" 70+00 TO "M5" 73+27	R+	TYPE III (L) ARROW	126		
	"M6" 65+00 TO "M6" 68+84	R+	TYPE I (24') ARROW	31		
	"M6" 65+00 TO "M6" 68+84	R+	DIAMOND	33		
	"M6" 65+00 TO "M6" 68+84	R+	12" YELLOW DIAGONAL	159		
PD-2	"M1" 45+27	R+	LIMIT LINE	49		
	"M3" 72+08	R+	LIMIT LINE	52		
	"M2" 72+25	R+	LIMIT LINE	30		
	"M1" 46+35	L+	LIMIT LINE	49		
	"M1" 41+00 TO "M1" 45+00	R+	TYPE III (R) ARROW	84		
	"M1" 41+00 TO "M1" 45+00	R+	"NB 101 ONLY"	51		
	"M1" 45+00 TO "M1" 47+00	R+, L+	BICYCLE LOOP DETECTOR SYMBOL Mod	4		19
	"M1" 41+00 TO "M1" 45+00	R+	BIKE LANE MARKING Mod	21		69
	"M1" 44+00 TO "M1" 45+10	R+	6" YELLOW DIAGONAL		62	
	"M2" 68+01 TO "M2" 69+00	R+	12" YELLOW DIAGONAL	144		
	"M2" 67+00 TO "M2" 68+00	R+	6" YELLOW DIAGONAL		9	
	"M2" 68+01 TO "M2" 67+91	R+, L+	BASIC CROSSWALK	267		
	"M1" 45+00 TO "M1" 47+00	R+	GREEN PAVEMENT MARKING			260
	"M1" 49+90 TO "M1" 51+00	R+	GREEN PAVEMENT MARKING			160
	"M1" 50+89 TO "M1" 53+00	R+	6" WHITE DIAGONAL		111	
	"M1" 50+89 TO "M1" 53+00	R+	6" WHITE DIAGONAL		98	
SUBTOTAL OF PDQ-7				3,050	311	1,156

Dist	COUNTY	ROUTE	POST MILES TOTAL PROJECT	SHEET No.	TOTAL SHEETS
04	SCL	101,237	45.2/45.8, 2.7/3.3	284	736

6-13-18
REGISTERED CIVIL ENGINEER DATE

6-20-18
PLANS APPROVAL DATE

REGISTERED PROFESSIONAL ENGINEER
STEVE LOUPE
No. 63575
Exp. 9/30/18
CIVIL
STATE OF CALIFORNIA

THE STATE OF CALIFORNIA OR ITS OFFICERS OR AGENTS SHALL NOT BE RESPONSIBLE FOR THE ACCURACY OR COMPLETENESS OF SCANNED COPIES OF THIS PLAN SHEET.

WMH CORPORATION
50 W San Fernando St
Suite 950
San Jose, CA 95113

VTA
3331 N First St
Building B
San Jose, Ca 95134

PAVEMENT DELINEATION QUANTITIES

PDQ-7

	EF	05/03/18			
	EILI FARAH	STEVE LOUPE			
	CALCULATED-DESIGNED BY	CHECKED BY			
	TIMOTHY J. LEE	CONSULTANT FUNCTIONAL SUPERVISOR			
	STATE OF CALIFORNIA - DEPARTMENT OF TRANSPORTATION				

LAST REVISION 01-15-18 | DATE PLOTTED => 7/23/2018 | TIME PLOTTED => 9:24:03 AM

X:\237_101_Mathilda\000_CAD\Sheets\VNA-Pvmt_Delin\NC-Quantities\0413000204nc007.dgn

BORDER LAST REVISED 7/2/2010 | USERNAME => eilif | DGN FILE => 0413000204nc007.dgn | RELATIVE BORDER SCALE IS IN INCHES 0 1 2 3 | UNIT 0000 | PROJECT NUMBER & PHASE 0413000204

PAVEMENT MARKING QUANTITIES

SHEET No.	LOCATION/STATION	DIRECTION	PAVEMENT MARKING	THERMOPLASTIC PAVEMENT MARKING (ENHANCED WET NIGHT VISIBILITY)		GREEN PAVEMENT MARKING
				CROSSWALK AND PAVEMENT MARKING	6" WHITE/YELLOW	
				SQFT		
PD-2	"M1" 46+35 TO "M1" 51+50	R+, L+	BIKE LANE MARKING Mod	32		104
	"M1" 46+35 TO "M1" 51+50	R+	TYPE III (L) ARROW	126		
	"M1" 46+35 TO "M1" 51+50	R+	TYPE I (24') ARROW	31		
	"M1" 46+35 TO "M1" 51+50	L+	"ONLY"	22		
	"M2" 68+00 TO "M2" 73+00	R+	DIAMOND	33		
	"M2" 68+00 TO "M2" 73+00	R+	TYPE I (24') ARROW	31		
	"M3" 72+00 TO "M3" 75+42	L+	TYPE III (L) ARROW	168		
	"M3" 72+00 TO "M3" 75+42	L+	TYPE III (R) ARROW	126		
PD-3	"M1" 51+50 TO "M1" 53+00	L+	TYPE III (L) ARROW	42		
	"M1" 51+50 TO "M1" 53+00	R+	TYPE I (24') ARROW	155		
	"M1" 51+50 TO "M1" 53+00	R+	TYPE II (R) ARROW	45		
	"M1" 51+50 TO "M1" 53+00	L+	BIKE LANE MARKING Mod	11		35
	"M1" 51+50 TO "M1" 53+00	R+	"EB 237 ONLY"	60.4		
	ROSS DR.	R+, L+	TYPE I (24') ARROW	62		
	ROSS DR.	R+, L+	TYPE II (L) ARROW	90		
	ROSS DR.	R+, L+	TYPE II (R) ARROW	90		
	ROSS DR.	R+	TYPE VIII ARROW	36		
	ROSS DR.	R+, L+	BICYCLE LOOP DETECTOR SYMBOL Mod	12		56
	"D5" 5+46 TO "D5" 9+00	R+	TYPE I (24') ARROW	31		
	"D5" 5+46 TO "D5" 9+00	R+	TYPE VI (R) ARROW	84		
	"D5" 5+46 TO "D5" 9+00	R+	"237" STATE ROUTE SHIELD	110		
	"D5" 8+00 TO "D5" 10+00	R+	12" WHITE CHEVRON	297		
	"M1" 52+00 TO "M1" 55+00	R+, L+	BICYCLE LOOP DETECTOR SYMBOL Mod	8		38
	"M1" 53+93 TO "M1" 56+04	L+	TYPE III (L) ARROW	84		
	"M1" 53+93 TO "M1" 56+04	L+	TYPE II (R) ARROW	45		
	"M1" 53+93 TO "M1" 56+04	R+, L+	BIKE LANE MARKING Mod	21		69
	"M1" 53+93 TO "M1" 56+04	R+	TYPE I (24') ARROW	217		
	"M1" 53+93 TO "M1" 56+04	R+	"MOFFETT PARK DRIVE ONLY"	111		
	"M1" 53+93 TO "M1" 56+04	R+	6 WHITE DIAGONAL		25	
	"M1" 54+00 TO "M1" 54+50	R+	12" WHITE CHEVRON	60		
	"M1" 57+30 TO "M1" 60+27	L+	TYPE I (24') ARROW	62		
	"M1" 57+30 TO "M1" 60+27	L+	TYPE II (R) ARROW	45		
	"M1" 57+30 TO "M1" 60+27	L+	TYPE III (L) ARROW	84		
	"M1" 57+30 TO "M1" 60+27	R+, L+	BIKE LANE MARKING Mod	21		69
	"M1" 57+30 TO "M1" 60+27	R+	TYPE III (L) ARROW	168		
	"M1" 57+30 TO "M1" 60+27	R+	"MOFFETT PARK DRIVE ONLY"	111		
	"M1" 59+50 TO "M1" 60+50	R+	6" WHITE DIAGONAL		24	
	"M1" 59+12 TO "M1" 62+00	L+	GREEN PAVEMENT MARKING			320
	"M1" 61+86 TO "M1" 62+00	R+, L+	SHARROW	92		
	"M1" 62+00 TO "M1" 65+00	L+	TYPE II (R) ARROW	45		
	"M1" 62+00 TO "M1" 65+00	R+	BIKE LANE MARKING Mod	11		35
	"M1" 55+00 TO "M1" 57+50	R+, L+	BICYCLE LOOP DETECTOR SYMBOL Mod	4		19
	"M1" 60+00 TO "M1" 62+00	R+, L+	BICYCLE LOOP DETECTOR SYMBOL Mod	4		19
	"D2" 107+92 TO "D2" 108+26	L+	6 WHITE DIAGONAL		45	
	"D2" 107+92 TO "D2" 108+26	L+	TYPE I (24') ARROW	31		
	"D3" 10+00 TO "D3" +11	L+	TYPE II (L) ARROW	45		
	"D3" 10+00 TO "D3" +11	L+	TYPE III (L) ARROW	42		
	"D3" 10+00 TO "D3" +11	R+	TYPE II (R) ARROW	45		
	"D3" 10+37	L+	LIMIT LINE	7		
	"D3" 10+40 TO "D3" 12+50	L+	BIKE LANE ARROW	14		
	"D3" 10+40 TO "D3" 12+50	L+	BIKE LANE SYMBOL WITH PERSON	14		
	"D3" 10+40 TO "D3" 12+50	L+	PEDESTRIAN SYMBOL	10		
	"D4R" 105+00 TO "D4R" 107+00	R+	TYPE II (L) ARROW	45		
	"D4R" 105+00 TO "D4R" 107+00	R+	TYPE III (L) ARROW	42		
	"D4R" 105+00 TO "D4R" 107+00	R+	TYPE III (R) ARROW	42		
SUBTOTAL OF PDQ-8				3,224	94	764

PAVEMENT DELINEATION QUANTITIES

PDQ-8

Dist	COUNTY	ROUTE	POST MILES TOTAL PROJECT	SHEET No.	TOTAL SHEETS
04	SCL	101,237	45.2/45.8, 2.7/3.3	285	736

6-13-18
REGISTERED CIVIL ENGINEER DATE

6-20-18
PLANS APPROVAL DATE

REGISTERED PROFESSIONAL ENGINEER
STEVE LOUPE
No. 63575
Exp. 9/30/18
CIVIL
STATE OF CALIFORNIA

THE STATE OF CALIFORNIA OR ITS OFFICERS OR AGENTS SHALL NOT BE RESPONSIBLE FOR THE ACCURACY OR COMPLETENESS OF SCANNED COPIES OF THIS PLAN SHEET.

WMH CORPORATION
50 W San Fernando St
Suite 950
San Jose, CA 95113

VTA
3331 N First St
Building B
San Jose, Ca 95134

REVISED BY	DATE REVISED
EF	05/03/18

CALCULATED-DESIGNED BY: EILI FARAH
CHECKED BY: STEVE LOUPE
CONSULTANT FUNCTIONAL SUPERVISOR: TIMOTHY J. LEE

STATE OF CALIFORNIA - DEPARTMENT OF TRANSPORTATION

Caltrans®

LAST REVISION 01-15-18
DATE PLOTTED => 7/23/2018
TIME PLOTTED => 9:24:05 AM

X:\237_101_Mathilda\000_CAD\Sheets\MA-Pvmt_Delin\NC-Quantities\V04130002O4nc008.dgn

BORDER LAST REVISED 7/2/2010 | USERNAME => eilif | DGN FILE => 0413000204nc008.dgn | RELATIVE BORDER SCALE IS IN INCHES 0 1 2 3 | UNIT 0000 | PROJECT NUMBER & PHASE 0413000204

PAVEMENT MARKING QUANTITIES

SHEET No.	LOCATION/STATION	DIRECTION	PAVEMENT MARKING	THERMOPLASTIC PAVEMENT MARKING (ENHANCED WET NIGHT VISIBILITY)		GREEN PAVEMENT MARKING
				CROSSWALK AND PAVEMENT MARKING	6" WHITE/YELLOW	
				SQFT		
PD-3	"D4R" 105+68 TO "D4R" 107+15	Rt	6" WHITE CHEVRON		60	
	"M1" 54+00 TO "M1" 56+00	Lt	6" WHITE DIAGONAL		36	
	"M1" 52+83 TO "M1" 52+93	Rt, Lt	BASIC CROSSWALK	264		
	ROSS Dr	Rt	BASIC CROSSWALK	174		
	PERSIAN Dr	Lt	BASIC CROSSWALK	75		
	PERSIAN Dr	Rt	BASIC CROSSWALK	67		
	PERSIAN Dr	Lt	LIMIT LINE	13		
	PERSIAN Dr	Rt	LIMIT LINE	11		
	"D5" 5+98 TO "D5" 6+10	Rt	BASIC CROSSWALK	52		
	"M1" 62+86 TO "M1" 62+02	Rt, Lt	DETAIL A	230		660
	"D3" 9+80 TO "D3" 9+91	Rt, Lt	BASIC CROSSWALK	125		
	MATHILDA Ave OFF RAMP TO SR237	Rt, Lt	BASIC CROSSWALK	95		
	"M1" 54+01	Lt	LIMIT LINE	62		
	"M1" 56+04	Rt	LIMIT LINE	63		
	"M1" 57+03	Lt	LIMIT LINE	38		
	"M1" 57+38	Lt	LIMIT LINE	15		
	"M1" 60+27	Rt	LIMIT LINE	66		
	"D4R" 106+89	Lt	LIMIT LINE	48		
	"L6" 160+33	Rt	LIMIT LINE	70		
	"L6" 161+32	Lt	LIMIT LINE	10		
	"L6" 161+32	Lt	"STOP"	9		
	"L6" 156+50 TO "L6" 166+32	Lt	BIKE LANE ARROW	28		
	"L6" 156+50 TO "L6" 166+32	Lt	BIKE LANE SYMBOL WITH PERSON	14		
	"L6" 156+50 TO "L6" 166+32	Lt	PEDESTRIAN SYMBOL	10		
	"L6" 157+00 TO "L6" 160+76	Lt	TYPE I (24') ARROW	62		
	"L6" 157+00 TO "L6" 160+76	Rt	TYPE III (R) ARROW	42		
	"L6" 157+00 TO "L6" 160+76	Rt	TYPE III (B) ARROW	73		
	"L6" 160+00 TO "L6" 161+00	Rt	BICYCLE LOOP DETECTOR SYMBOL Mod	4		19
	"L6" 159+00 TO "L6" 161+00	Rt	6" YELLOW DIAGONAL		113	
PD-4	"M1" 66+00 TO "M1" 71+00	Rt	TYPE III (L) ARROW	168		
	"M1" 66+00 TO "M1" 71+00	Rt	TYPE III (R) ARROW	42		
	"M1" 66+00 TO "M1" 71+00	Rt	BIKE LANE MARKING Mod	7		
	"M1" 66+00 TO "M1" 71+00	Rt	BIKE LANE ARROW	4		
	"M1" 66+00 TO "M1" 71+00	Rt	"RT TURN ONLY"	56		
	"M1" 70+00 TO "M1" 74+00	Rt, Lt	BICYCLE LOOP DETECTOR SYMBOL Mod	8		38
	"M1" 73+00 TO "M1" 74+00	Rt	TYPE III (L) ARROW	42		
	"M1" 66+00 TO "M1" 71+00	Rt	RAILOAD CROSSING SYMBOL	140		
	"I1" 170+00 TO "I1" 171+00	Rt	TYPE III (L) ARROW	42		
	"I1" 170+00 TO "I1" 171+00	Rt	TYPE III (R) ARROW	42		
	"I1" 170+00 TO "I1" 171+00	Rt	TYPE II (R) ARROW	45		
	"I2" 273+00 TO "I2" 273+50	Lt	TYPE II (R) ARROW	45		
	"I2" 273+00 TO "I2" 273+00	Lt	TYPE III (L) ARROW	42		
	"I2" 273+00 TO "I2" 274+00	Lt	BICYCLE LOOP DETECTOR SYMBOL Mod	4		19
	"M1" 71+09	Rt	LIMIT LINE	39		
	"M1" 71+33	Rt	LIMIT LINE	20		
	"D1" 79+30 TO "D1" 80+00	CENTER	6" YELLOW DIAGONAL		44	
	"D1" 82+50 TO "D1" 83+30	CENTER	6" YELLOW DIAGONAL		29	
	"D1" 79+92 TO "D1" 83+00	CENTER	TYPE III (L) ARROW	168		
	"D1" 79+92 TO "D1" 83+00	Rt, Lt	TYPE II (R) ARROW	90		
	"D1" 80+87	Rt, Lt	LIMIT LINE	23		
	"D1" 80+97	Rt, Lt	LIMIT LINE	27		
	"D1" 81+87	Rt, Lt	LIMIT LINE	27		
	"D1" 81+88	Rt, Lt	LIMIT LINE	23		
	"D1" 80+62 TO "D1" 81+90	Rt, Lt	GREEN PAVEMENT MARKING			373
SUBTOTAL OF PDQ-9				2,824	282	1,109

Dist	COUNTY	ROUTE	POST MILES TOTAL PROJECT	SHEET No.	TOTAL SHEETS
04	SCL	101,237	45.2/45.8, 2.7/3.3	286	736

6-13-18
REGISTERED CIVIL ENGINEER DATE

6-20-18
PLANS APPROVAL DATE

REGISTERED PROFESSIONAL ENGINEER
STEVE LOUPE
No. 63575
Exp. 9/30/18
CIVIL
STATE OF CALIFORNIA

THE STATE OF CALIFORNIA OR ITS OFFICERS OR AGENTS SHALL NOT BE RESPONSIBLE FOR THE ACCURACY OR COMPLETENESS OF SCANNED COPIES OF THIS PLAN SHEET.

WMH CORPORATION
50 W San Fernando St
Suite 950
San Jose, CA 95113

VTA
3331 N First St
Building B
San Jose, Ca 95134

PAVEMENT DELINEATION QUANTITIES

PDQ-9

	REVISED BY	DATE REVISED
	EF	05/03/18
CALCULATED-DESIGNED BY	EILI FARAH	
CHECKED BY	STEVE LOUPE	
SUPERVISOR	TIMOTHY J. LEE	
CONSULTANT FUNCTIONAL		

STATE OF CALIFORNIA - DEPARTMENT OF TRANSPORTATION
Caltrans

LAST REVISION 01-15-18
DATE PLOTTED => 7/23/2018
TIME PLOTTED => 9:24:06 AM

X:\237_101_Morrilldo\000_CAD\Sheets\NA-Pavmt_Delin\NC-Quantities\0413000204nc009.dgn

BORDER LAST REVISED 7/2/2010
USERNAME => eilif
DGN FILE => 0413000204nc009.dgn
RELATIVE BORDER SCALE IS IN INCHES 0 1 2 3
UNIT 0000
PROJECT NUMBER & PHASE 0413000204

Dist	COUNTY	ROUTE	POST MILES TOTAL PROJECT	SHEET No.	TOTAL SHEETS
04	SCL	101,237	45.2/45.8, 2.7/3.3	287	736

6-13-18
REGISTERED CIVIL ENGINEER DATE

6-20-18
PLANS APPROVAL DATE

REGISTERED PROFESSIONAL ENGINEER
STEVE LOUPE
No. 63575
Exp. 9/30/18
CIVIL
STATE OF CALIFORNIA

THE STATE OF CALIFORNIA OR ITS OFFICERS OR AGENTS SHALL NOT BE RESPONSIBLE FOR THE ACCURACY OR COMPLETENESS OF SCANNED COPIES OF THIS PLAN SHEET.

WMH CORPORATION
50 W San Fernando St
Suite 950
San Jose, CA 95113

VTA
3331 N First St
Building B
San Jose, Ca 95134

PAVEMENT MARKING QUANTITIES

SHEET No.	LOCATION/STATION	DIRECTION	PAVEMENT MARKING	THERMOPLASTIC PAVEMENT MARKING (ENHANCED WET NIGHT VISIBILITY)		GREEN PAVEMENT MARKING
				CROSSWALK AND PAVEMENT MARKING	6" WHITE/YELLOW	
				SQFT		
PD-4	"D1" 80+00 TO "D1" 81+90	Rt, Lt	BICYCLE LOOP DETECTOR SYMBOL Mod	4		19
	"D1" 81+78 TO "D1" 81+97	Rt, Lt	GREEN PAVEMENT MARKING			349
	"D1" 81+00 TO "D1" 82+00	Rt	GREEN PAVEMENT MARKING			100
	"D1" 81+00 TO "D1" 82+00	Lt	GREEN PAVEMENT MARKING			100
	"D1" 80+50 TO "D1" 82+00	Rt, Lt	IV (L) ARROW	30		
	"D1" 80+50 TO "D1" 82+00	Rt, Lt	BIKE LANE MARKING Mod	21		
	"I2" 280+85	Rt, Lt	LIMIT LINE	11		
	"I2" 280+95	Rt, Lt	LIMIT LINE	17		
	"I2" 273+01 TO "I2" 281+00	Lt	TYPE VIII ARROW	36		
	"I2" 280+60 TO "I2" 280+95	Rt, Lt	GREEN PAVEMENT MARKING			262
	"I2" 280+60 TO "I2" 280+95	Rt	BICYCLE LOOP DETECTOR SYMBOL Mod	2		9
	"D1" 81+00 TO "D1" 82+00	Rt, Lt	LADDER CROSSWALK	1,053		
PD-6	"M3" 88+00 TO "M3" 89+00	Lt	TYPE I (24') ARROW	62		
PD-8	"L6" 147+00 TO "L6" 151+00	Lt	TYPE II (R) ARROW	45		
	"L6" 147+00 TO "L6" 151+00	Lt	TYPE III (L) ARROW	42		
	"L6" 148+00 TO "L6" 148+50	Rt, Lt	BICYCLE LOOP DETECTOR SYMBOL Mod	4		19
	"L6" 148+22 TO "L6" 150+09	Rt, Lt	GREEN PAVEMENT MARKING			280
	"L6" 148+22 TO "L6" 150+09	Rt, Lt	SHARROW	46		
	"L6" 148+22 TO "L6" 150+09	Lt	GREEN PAVEMENT MARKING			260
	"L6" 148+22 TO "L6" 150+09	Lt	SHARROW	35		
	"L6" 149+50 TO "L6" 151+00	Rt, Lt	BIKE LANE SYMBOL WITH PERSON	14		
	"L6" 149+50 TO "L6" 151+00		PERSON SYMBOL	21		
	"L6" 150+00 TO "L6" 152+00	Lt	RAILOAD CROSSING SYMBOL	70		
	"L6" 148+22	Rt, Lt	LIMIT LINE	36		
	"L6" 150+21	Lt	LIMIT LINE	6		
	"L6" 150+09	Lt	LIMIT LINE	37		
PD-8	"L6" 149+50 TO "L6" 151+00	Rt, Lt	BIKE LANE SYMBOL WITHOUT PERSON	49		
	"I1" 149+00 TO "I1" 150+00	Lt	LIMIT LINE	77		
	"I1" 149+00 TO "I1" 150+00	Lt	GREEN PAVEMENT MARKING			152
	"I1" 150+00 TO "I1" 151+00	Rt	"STOP HERE"	19		
	"L6" 149+00 TO "I1" 150+00	Lt	"STOP"	9		
	"L6" 149+00 TO "I1" 150+00	Lt	"STOP HERE"	19		
	"L6" 150+10 TO "L6" 155+00	Lt	BIKE LANE ARROW	21		
PD-9	"B1" 68+33	Lt	LIMIT LINE	13		
	"B1" 68+07	Rt	LIMIT LINE	11		
	"D3" 13+00 TO "D3" 20+00	Rt, Lt	TYPE I (24') ARROW	62		
	"D3" 13+00 TO "D3" 14+00	Rt	TYPE II (R) ARROW	45		
	"D3" 13+00 TO "D3" 14+00	Lt	TYPE II (L) ARROW	45		
	"B1" 68+00 TO "B1" 69+00	Rt, Lt	YIELD LINE	14		
	BORDEAUX Dr	Rt, Lt	DETAIL C	110		220
	"B1" 59+00 TO "B1" 70+00	Rt, Lt	"STOP"	40		
	"B1" 59+00 TO "B1" 70+00	Rt, Lt	BIKE LANE ARROW	25		
	"D3" 13+00 TO "D3" 17+47	Lt	BIKE LANE ARROW	21		
	"B1" 59+00 TO "B1" 70+00	Rt, Lt	BIKE LANE SYMBOL WITH PERSON	35		
	"D3" 13+00 TO "D3" 17+47	Lt	BIKE LANE SYMBOL WITH PERSON	14		
	"B1" 59+00 TO "B1" 70+00	Rt, Lt	PEDESTRIAN SYMBOL	15		
	"D3" 13+00 TO "D3" 17+47	Lt	PEDESTRIAN SYMBOL	10		
	"B1" 59+00 TO "B1" 60+00	Rt	"40"	19.5		
SUBTOTAL OF PDQ-10				2,266		1,770

PAVEMENT DELINEATION QUANTITIES

PDQ-10

CALCULATED-DESIGNED BY	EILI FARAH	REVISED BY	EF
CHECKED BY	STEVE LOUPE	DATE REVISED	05/03/18

CONSULTANT FUNCTIONAL SUPERVISOR: TIMOTHY J. LEE

STATE OF CALIFORNIA - DEPARTMENT OF TRANSPORTATION

Caltrans

LAST REVISION: 01-15-18
DATE PLOTTED => 7/23/2018
TIME PLOTTED => 9:24:08 AM

X:\237_101_Mathilda\000_CAD\Sheets\MA-Pvmt_Delin\NC-Quantities\0413000204nc010.dgn

BORDER LAST REVISED 7/2/2010

USERNAME => eilif
DGN FILE => 0413000204nc010.dgn

RELATIVE BORDER SCALE IS IN INCHES 0 1 2 3

UNIT 0000

PROJECT NUMBER & PHASE 0413000204

Dist	COUNTY	ROUTE	POST MILES TOTAL PROJECT	SHEET No.	TOTAL SHEETS
04	SCL	101,237	45.2/45.8, 2.7/3.3	288	736

REGISTERED CIVIL ENGINEER — 6-13-18 DATE

6-20-18
PLANS APPROVAL DATE

REGISTERED PROFESSIONAL ENGINEER — STEVE LOUPE — No. 63575 — Exp. 9/30/18 — CIVIL — STATE OF CALIFORNIA

THE STATE OF CALIFORNIA OR ITS OFFICERS OR AGENTS SHALL NOT BE RESPONSIBLE FOR THE ACCURACY OR COMPLETENESS OF SCANNED COPIES OF THIS PLAN SHEET.

WMH CORPORATION
50 W San Fernando St
Suite 950
San Jose, CA 95113

VTA
3331 N First St
Building B
San Jose, Ca 95134

PAVEMENT MARKING QUANTITIES

SHEET No.	LOCATION/STATION	DIRECTION	PAVEMENT MARKING	THERMOPLASTIC PAVEMENT MARKING (ENHANCED WET NIGHT VISIBILITY)		GREEN PAVEMENT MARKING
				CROSSWALK AND PAVEMENT MARKING	6" WHITE/YELLOW	
				SQFT		
PD-10	"I1" 155+80 TO "I1" 155+91	R+, L+	DETAIL B	221		
	11TH Ave	L+	DETAIL B	273		
	11TH Ave	R+	DETAIL B	302		
	"I1" 157+12 TO "I1" 157+22	R+, L+	DETAIL B	200		
	"I1" 155+80 TO "I1" 155+90	R+, L+	DETAIL B GREEN MARKING			2,174
	11TH Ave	R+	TYPE II (L) ARROW	45		
	11TH Ave	L+	TYPE VIII ARROW	36		
	11TH Ave	R+	TYPE III (R) ARROW	42		
	11TH Ave	R+	TYPE III (L) ARROW	42		
	11TH Ave	R+	LIMIT LINE	40		
	"I1" 167+09 TO "I1" 167+20	R+, L+	BASIC CROSSWALK	135		
	"I1" LINE 168+61	L+	LIMIT LINE	30		
	JUNIPER NETWORKS	L+	BASIC CROSSWALK	153		
	JUNIPER NETWORKS	L+	TYPE III (B) ARROW	73		
	"I1" 155+00 TO "I1" 155+91	R+	TYPE II (R) ARROW	45		
	"I1" 155+00 TO "I1" 155+91	R+	TYPE III (L) ARROW	42		
	"I1" 157+00 TO "I1" 158+00	L+	TYPE II (R) ARROW	45		
	"I1" 157+00 TO "I1" 158+00	L+	TYPE III (L) ARROW	42		
	"I1" 165+00 TO "I1" 167+20	CENTER	TYPE III (L) ARROW	84		
	"I1" 168+00 TO "I1" 169+00	L+	TYPE I (24') ARROW	31		
	"I1" 168+00 TO "I1" 169+00	L+	TYPE III (R) ARROW	42		
SUBTOTAL OF PDQ-11				1,923		2,174
SUBTOTAL OF PDQ-10				2,266		1,770
SUBTOTAL OF PDQ-9				2,824	282	1,109
SUBTOTAL OF PDQ-8				3,224	94	764
SUBTOTAL OF PDQ-7				3,050	311	1,156
GRAND TOTAL				13,287	687*	6,973

(*) - QUANTITIES INCLUDED IN PAVEMENT DELINEATION QUANTITIES

DELINEATOR

SHEET No.	STATION		DELINEATOR (CLASS 1)		Conc BARRIER DELINEATOR (N)		GUARD RAILING DELINEATOR
			TYPE F	TYPE G	TYPE G	TYPE F	TYPE G
			EA				
PD-1	"M1" 31+50 TO 35+00	L+	3		7		
	"M6" 65+00 TO 68+50	L+/R+	10	4	16		
	"M5" 69+50 TO 73+00	R+	10				
PD-2	"M1" 41+00 TO 45+00	L+/R+				2	
	"M1" 43+50 TO 50+00	L+				9	9
	"M3" 72+00 TO 75+00	L+/R+	9		16		
	"M2" 68+00 TO 74+41	L+/R+	18				6
	"C" 372+00 TO 374+00	R+					7
	"C" 372+00 TO 374+00	L+					7
PD-3	"D4R" 105+00 TO 107+00	R+	2				
	"D2" 107+00 TO 108+40	R+	1				
	"D5a" 5+50 TO 10+50	L+/R+	16		6		
	"D3" 10+00 TO 12+00	R+		4			
PD-5	"M5" 68+00 TO 69+50	R+	4				
PD-6	"M3" 74+50 TO 79+00	L+	8				
	"C" 384+80 TO 390+00	L+			7		4
PD-9	"B1" 62+00 TO 64+00	L+					3
TOTAL			89		63		36

PAVEMENT DELINEATION QUANTITIES

PDQ-11

REVISED BY	EF			
DATE REVISED	05/03/18			
CALCULATED-DESIGNED BY	EILI FARAH			
CHECKED BY	STEVE LOUPE			
CONSULTANT FUNCTIONAL SUPERVISOR	TIMOTHY J. LEE			
STATE OF CALIFORNIA - DEPARTMENT OF TRANSPORTATION	Caltrans			

LAST REVISION 01-15-18 — DATE PLOTTED => 7/23/2018 — TIME PLOTTED => 9:24:10 AM

X:\237_101_Mathilda\000_CAD\Sheets\MA-Pavmt_Delin\NC-Quantities\0413000204nc011.dgn

BORDER LAST REVISED 7/2/2010 | USERNAME => eilif | DGN FILE => 0413000204nc011.dgn | RELATIVE BORDER SCALE IS IN INCHES 0 1 2 3 | UNIT 0000 | PROJECT NUMBER & PHASE 0413000204

Dist	COUNTY	ROUTE	POST MILES TOTAL PROJECT	SHEET No.	TOTAL SHEETS
04	SCL	101,237	45.2/45.8, 2.7/3.3	289	736

6-13-18
REGISTERED CIVIL ENGINEER — DATE

6-20-18
PLANS APPROVAL DATE

REGISTERED PROFESSIONAL ENGINEER — STEVE LOUPE — No. 63575 — Exp. 9/30/18 — CIVIL — STATE OF CALIFORNIA

THE STATE OF CALIFORNIA OR ITS OFFICERS OR AGENTS SHALL NOT BE RESPONSIBLE FOR THE ACCURACY OR COMPLETENESS OF SCANNED COPIES OF THIS PLAN SHEET.

WMH CORPORATION
50 W San Fernando St
Suite 950
San Jose, CA 95113

VTA
3331 N First St
Building B
San Jose, Ca 95134

OBJECT MARKER

SHEET No.	STATION		TYPE N-4	TYPE K-1	TYPE Q	TYPE L-1	TYPE P	TYPE R
			EA					
PD-1	"M1" 29+50 TO 32.00	Rt/Lt		1	2		1	
	"M1" 37+50 TO 38+00	Lt			1			
	"M5" 64+50 TO 65+00	Rt					1	
PD-2	M1" 46+00 TO 51+00	CENTER			1	1	1	
	"M2" 67+00 TO 69+00	Rt/Lt	1				1	
	"C" 371+00 TO 374+00	Lt				2		
PD-3	"M1" 52+50 TO 54+00	CENTER			2			
	"M1" 55+50 TO 65+00	CENTER			3			
	"D5a" 5+00 TO 6+00	Lt			1		1	
	"D2" 107+50 TO 108+50	Lt		1				
	"L6" 160+00 TO 161+00	Lt	1					
PD-4	"M1" 70+50 TO 73+50	Rt	1	1				
	"I1" 171+00 TO 172+00	Lt	1					
PD-6	"C" 387+00 TO 389+50	Lt				1	1	
	"M3 78+00 TO 79+00	Lt						1
PD-8	"I1" 149+00 TO 150+00	Lt	1					
	"L6" 150+00 TO 150+50	Lt					1	
PD-9	"D3" 18+00 TO 18+50	Lt						1
	"B1" 68+00 TO 69+00	Rt			2			
	"C" 222+00 TO 228+00	Lt				1	1	
PD-10	"I1"155+00 TO 169+00	Lt			3			
TOTAL			5	3	15	5	8	2

PAVEMENT DELINEATION REMOVAL QUANTITIES

LOCATION/STATION LIMITS		REMOVE THERMOPLASTIC PAVEMENT MARKING	REMOVE WHITE PAINTED TRAFFIC STRIPE (HAZARDOUS WASTE)	REMOVE THERMOPLASTIC TRAFFIC STRIPE	REMOVE PAVEMENT MARKER
		SQFT	LF		EA
"M1" 27+00 TO 31+10	Rt/Lt	440.5		2,140	89
ALMANOR Ave	Rt/Lt	347	35	107	6
AHWANEE Ave	Rt/Lt	252	60	70	5
"M1" 31+00 TO 41+10	Rt/Lt	305	3,589	6,450	418
"M1" 41+10 TO 43+48	Rt/Lt		964	1,205	90
"M1" 43+48 TO 53+01	Rt/Lt	722	3,188	4,610	325
"M5" 66+00 TO 72+50	Rt		809	522	55
"M6" 65+00 TO 69+00	Rt	22	352	495	35
"M1" 48+71 TO 53+01	Rt/Lt	722	1,876	5,356	301
"M1" 53+01 TO 53+90	Rt	153			
ROSS Dr	Lt	84			
ROSS Dr	Rt	502	236	288	22
"M1" 53+90 TO 55+70	Rt/Lt	145	570	1,468	85
"D5" 5+84 TO 10+00	Rt/Lt	108	114	672	33
"D4R" 105+00 TO 107+00	Rt	108	77	237	13
"M1" 55+70 TO 59+00	Rt/Lt	313	298	2,078	99
"M1" 59+00 TO 59+75	Lt				56
"M1" 59+75 TO 60+75	Rt/Lt	319	180	668	35
"M1" 60+75 TO 62+06	Rt/Lt	102			204
"M1" 62+06 TO 71+07	Rt/Lt	605	1,632	5,091	280
"M1" 71+07 TO 73+00	Rt/Lt				31
"M1" 73+00 TO 74+00	Rt	42			
"I1" 154+00 TO 159+00	Rt/Lt	1,276.5		1,101	46
"I1" 165+00 TO 170+00	Rt/Lt	320	68	586	27
"I1" 170+00 TO 171+00	Rt/Lt	126			
"B1" 79+00 TO 83+50	Rt/Lt	47	512		21
"I1" 149+00 TO 150+55	Rt			115	5
"L6" 147+00 TO 148+50	Rt/Lt	76	85	236	13
"L6" 149+00 TO 161+00	Rt/Lt	871	5,092	3,501	358
"D2" 107+00 TO 108+50	Rt/Lt	50	86	50	6
"M2" 68+00 TO 74+10	Rt/Lt	190	644	879	63
"C" 471+00 TO 475+00	Lt			342	14
"M3" 72+00 TO 82+67	Lt	33	646	1,146	75
"C" 382+00 TO 391+00	Lt			820	34
"D3" 9+50 TO 20+52	Rt/Lt	621	2,096	1,732	160
"B1" 58+71 TO 70+00	Rt/Lt	96	1,156	1,902	127
TOTAL		8,998	24,365	43,867	3,131

PAVEMENT DELINEATION QUANTITIES

PDQ-12

REVISED BY	EF
DATE REVISED	05/03/18
CALCULATED-DESIGNED BY	EILI FARAH
CHECKED BY	STEVE LOUPE
CONSULTANT FUNCTIONAL SUPERVISOR	TIMOTHY J. LEE

STATE OF CALIFORNIA - DEPARTMENT OF TRANSPORTATION

LAST REVISION 01-15-18 | DATE PLOTTED => 7/23/2018 | TIME PLOTTED => 9:24:11 AM

X:\237_101_Mathilde\000_CAD\Sheets\NA-Pavmt_Delin\NC-Quantities\D413000204nc012.dgn

BORDER LAST REVISED 7/2/2010 | USERNAME => eilif | DGN FILE => 0413000204nc012.dgn | RELATIVE BORDER SCALE IS IN INCHES 0 1 2 3 | UNIT 0000 | PROJECT NUMBER & PHASE 0413000204

Dist	COUNTY	ROUTE	POST MILES TOTAL PROJECT	SHEET No.	TOTAL SHEETS
04	SCL	101,237	45.2/45.8, 2.7/3.3	290	736

REGISTERED CIVIL ENGINEER — 6-13-18 DATE

6-20-18
PLANS APPROVAL DATE

REGISTERED PROFESSIONAL ENGINEER — STEVE LOUPE No. 63575 Exp. 9/30/18 CIVIL — STATE OF CALIFORNIA

THE STATE OF CALIFORNIA OR ITS OFFICERS OR AGENTS SHALL NOT BE RESPONSIBLE FOR THE ACCURACY OR COMPLETENESS OF SCANNED COPIES OF THIS PLAN SHEET.

WMH CORPORATION 50 W San Fernando St Suite 950 San Jose, CA 95113	VTA 3331 N First St Building B San Jose, Ca 95134

NOTES:

1. FOR ACCURATE RIGHT OF WAY DATA, CONTACT RIGHT OF WAY ENGINEERING AT THE DISTRICT OFFICE.
2. EXACT LOCATION AND POSITION OF ROADSIDE SIGNS SHALL BE DETERMINED BY THE ENGINEER
3. SNS (TYPE II) MAMS, SEE Elect PLANS

LEGEND:

- ● REMOVE ROADSIDE SIGN
- ✳ EXISTING ROADSIDE SIGN TO REMAIN
- ■ INSTALL ROADSIDE SIGN ON METAL POST

ABBREVIATIONS

MAMS	MAST-ARM MOUNTED SIGN
MBMS	METAL BARRIER MOUNTED SIGN (SEE STANDARD PLAN A76BB)

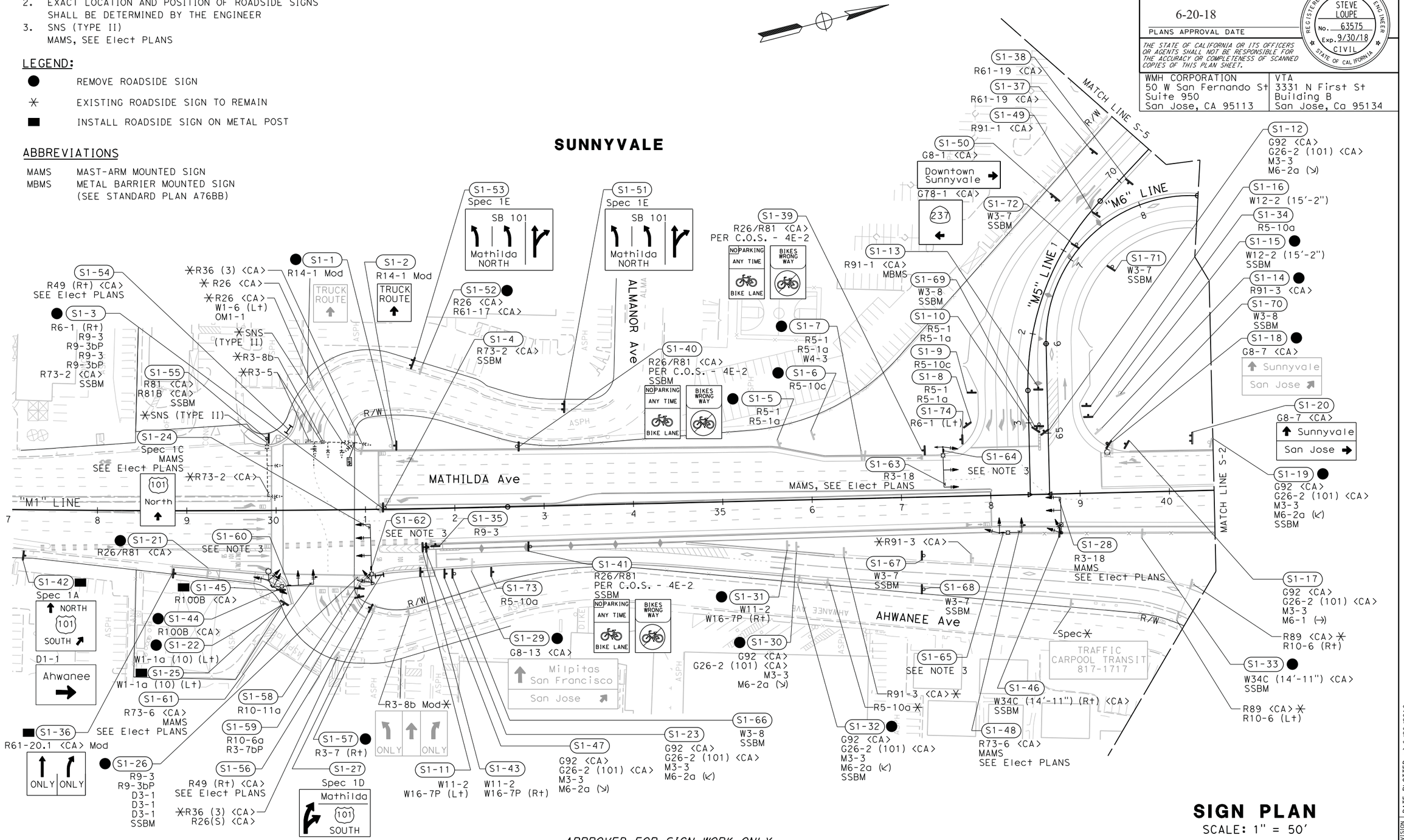

APPROVED FOR SIGN WORK ONLY

SIGN PLAN

SCALE: 1" = 50'

S-1

STATE OF CALIFORNIA - DEPARTMENT OF TRANSPORTATION — Caltrans®

CONSULTANT FUNCTIONAL SUPERVISOR: TIMOTHY J. LEE

CALCULATED-DESIGNED BY: STEVE LOUPE
CHECKED BY: SHAWN VOGTMAN
REVISED BY: SCV
DATE REVISED: 05/03/18

LAST REVISION: 01-15-18
DATE PLOTTED => 6/20/2018
TIME PLOTTED => 11:19:09 AM

X:\237_101_Mathilda\000_CAD\Sheets\OA-Signs\OA-Plans\0413000204oa001.dgn

BORDER LAST REVISED 7/2/2010 | USERNAME => Eilif | DGN FILE => 0413000204oa001.dgn | RELATIVE BORDER SCALE IS IN INCHES 0 1 2 3 | UNIT 0000 | PROJECT NUMBER & PHASE 0413000204

Dist	COUNTY	ROUTE	POST MILES TOTAL PROJECT	SHEET No.	TOTAL SHEETS
04	SCL	101,237	45.2/45.8, 2.7/3.3	291	736

REGISTERED CIVIL ENGINEER — 6-13-18 DATE

6-20-18
PLANS APPROVAL DATE

REGISTERED PROFESSIONAL ENGINEER — STEVE LOUPE — No. 63575 — Exp. 9/30/18 — CIVIL — STATE OF CALIFORNIA

THE STATE OF CALIFORNIA OR ITS OFFICERS OR AGENTS SHALL NOT BE RESPONSIBLE FOR THE ACCURACY OR COMPLETENESS OF SCANNED COPIES OF THIS PLAN SHEET.

WMH CORPORATION
50 W San Fernando St
Suite 950
San Jose, CA 95113

VTA
3331 N First St
Building B
San Jose, Ca 95134

NOTES:

1. FOR ACCURATE RIGHT OF WAY DATA, CONTACT RIGHT OF WAY ENGINEERING AT THE DISTRICT OFFICE.
2. SNS (TYPE II) MAMS, SEE Elect PLANS
3. R73-3 <CA> MAMS, SEE Elect PLANS
4. R3-18 MAMS, SEE Elect PLANS
5. R49 (Rt) <CA> SEE Elect PLANS
6. R49 (Lt) <CA> SEE Elect PLANS

R26/R81 <CA> PER C.O.S. - 4E-2

DETAIL A

NO PARKING ANY TIME — BIKES WRONG WAY — BIKE LANE

OS2-1 REMOVE SIGN PANEL AND REMOVABLE SIGN PANEL FRAME

DETAIL B

G83-2 <CA>: Mtn View- Alviso Rd 1/2 MILE — WEST — 237

G85-5 <CA>: Sunnyvale Mathilda Ave South

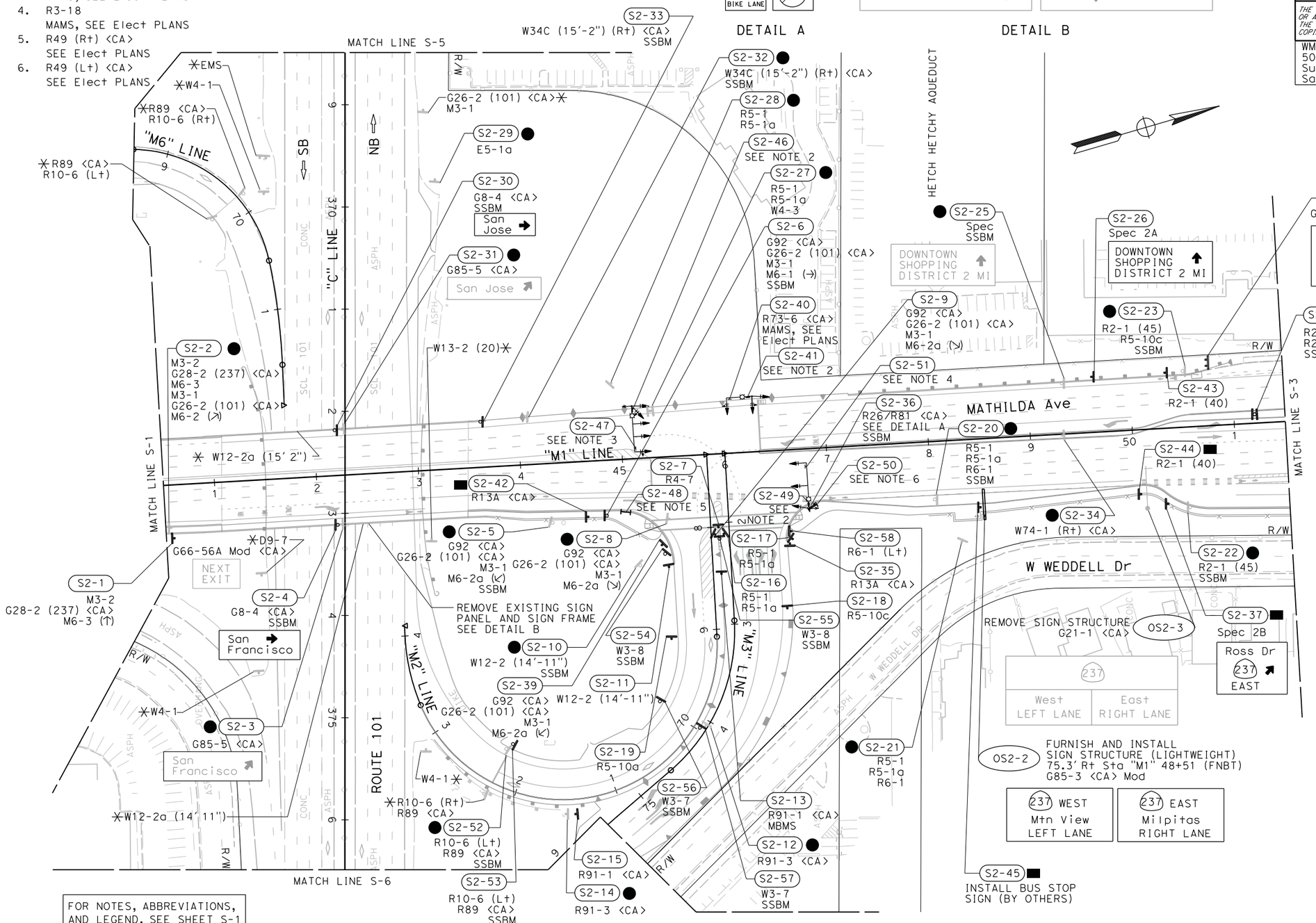

FOR NOTES, ABBREVIATIONS, AND LEGEND, SEE SHEET S-1

APPROVED FOR SIGN WORK ONLY

SIGN PLAN

SCALE: 1" = 50'

S-2

CALCULATED-DESIGNED BY	REVISED BY	DATE REVISED
CHECKED BY	SHAWN VOGTMAN	
CONSULTANT FUNCTIONAL SUPERVISOR	TIMOTHY J. LEE	
STATE OF CALIFORNIA - DEPARTMENT OF TRANSPORTATION	STEVE LOUPE	SCV 05/03/18

Caltrans

LAST REVISION 01-15-18 — DATE PLOTTED => 6/20/2018 — TIME PLOTTED => 11:19:15 AM

X:\237_101_Mathilda\000_CAD\Sheets\OA-Signs\OA-Plans\0413000204oa002.dgn

BORDER LAST REVISED 7/2/2010 | USERNAME => Eilif | DGN FILE => 0413000204oa002.dgn | RELATIVE BORDER SCALE IS IN INCHES 0 1 2 3 | UNIT 0000 | PROJECT NUMBER & PHASE 0413000204

NOTES:

1. FOR ACCURATE RIGHT OF WAY DATA, CONTACT RIGHT OF WAY ENGINEERING AT THE DISTRICT OFFICE.
2. SNS (TYPE II) MAMS, SEE Elect PLANS
3. R49 (Lt) <CA> SEE Elect PLANS

Dist	COUNTY	ROUTE	POST MILES TOTAL PROJECT	SHEET No.	TOTAL SHEETS
04	SCL	101,237	45.2/45.8, 2.7/3.3	292	736

6-13-18
REGISTERED CIVIL ENGINEER — DATE

6-20-18
PLANS APPROVAL DATE

REGISTERED PROFESSIONAL ENGINEER — STEVE LOUPE — No. 63575 — Exp. 9/30/18 — CIVIL — STATE OF CALIFORNIA

THE STATE OF CALIFORNIA OR ITS OFFICERS OR AGENTS SHALL NOT BE RESPONSIBLE FOR THE ACCURACY OR COMPLETENESS OF SCANNED COPIES OF THIS PLAN SHEET.

WMH CORPORATION
50 W San Fernando St
Suite 950
San Jose, CA 95113

VTA
3331 N First St
Building B
San Jose, Ca 95134

MATCH LINE S-10
W16-1P Mod
SHARE THE ROAD
S3-52 Spec
MATHILDA NORTH ONLY | MATHILDA SOUTH ONLY | HWY ONLY
S3-137 G77-4 <CA>
EAST 237 WEST
S3-61 G8-13 <CA>
Sunnyvale Civic Center San Jose
Mountain View Moffett Field
S3-80 Spec 3A
237 EAST Mathilda
W34C (14'-11") <CA>
MATCH LINE S-8
EB 205
WB
"D2" LINE
105
R/W
S3-120 W3-7 SSBM
S3-51 R61-11 <CA>
R2-1 (40)
S3-15 R61-11 <CA>
S3-60 R10-7 R9-3 R9-3a R3-1 SSBM
MOFFETT PARK Dr
VTA LIGHT RAIL
R26 <CA> (HERE TO CORNER)
"D4R" LINE
S3-1 R10-12 MAMS SEE Elect PLANS
R49 (Rt) <CA> SEE Elect PLANS
S3-101 SEE NOTE 2
ROSS Dr
S3-132 R5-10c
S3-133 R5-10c
R5-10a
S3-127 W4-10 (10) <CA>
S3-53 R1-2
S3-86 R10-11
S3-93 R61-1 <CA> MAMS SEE Elect PLANS
S3-63 R9-3 Mod
NO PED CROSSING USE CROSSWALK
S3-65 G8-13 <CA>
Sunnyvale Civic Center San Jose
S3-77 SEE NOTE 2
S3-78 R9-3
S3-81 W4-2
R/W
S3-11 W12-2 (14'-11") W34A (350 FT) <CA> SSBM
ROUTE 237
"L6" LINE
S3-84 W11-15
S3-91 R1-5 (Lt) FSBT R9-3 FNBT
S3-92 SEE NOTE 2
S3-64 R10-7 SSBM
SUNNYVALE WEST CHANNEL CULVERT
VTA LRT R/W
M4-5 M3-1 G26-2 (101) <CA> M4-6 (USE) M3-4 G28-2 (237) <CA>
S3-12 W12-2 (14'-11") W34A (350 FT) <CA> SSBM
S3-79 R73-2 <CA> MAMS, SEE Elect PLANS
S3-134 R73-2 <CA>
"M1" LINE
S3-85 R4-7
W12-2 (14'-8")
R26/R81 <CA>
MATCH LINE S-2
S3-104 SEE NOTE 2
S3-5 R10-7
S3-102 SEE NOTE 2
S3-66 R9-3
S3-76 SEE NOTE 3
S3-3 R10-7 SSBM
S3-4 R10-7 SSBM
S3-103 R10-12 MAMS, SEE Elect PLANS
SEE SD-1
S3-22 R49 (Rt) <CA> SEE Elect PLANS
MATHILDA Ave
S3-40 R6-1 (Rt)
S3-41 R2-1 (45) SSBM
MATCH LINE S-4
S3-97 SEE NOTE 2
S3-126 R3-1
S3-94 R73-5 <CA> MAMS SEE Elect Plans
S3-42 R2-1 (40)
R26/R81 <CA>
S3-95 SEE NOTE 2
S3-98 R61-11 <CA> MAMS SEE Elect PLANS
S3-28 R6-1 (Lt) FNBT R6-1 (Rt) FSBT
S3-90 W11-15 W16-5P (Rt)
R26/R81 <CA>
S3-38 D1-1
Innovation Way
Spec
FINANCIAL ASSISTANCE FOR THIS PROJECT PROVIDED BY U.S. DEPARTMENT OF ENERGY
CITY OF SUNNYVALE ENERGY EFFICIENT STREET CONVERSION PROJECT
SSBM
S3-119 R26 <CA> SSBM
S3-88 R1-5 (Lt)
S3-124 R5-1 R5-1a
S3-87 W11-15
S3-39 D1-1
Innovation Way
S3-123 R10-15 (Rt) MBMS
S3-37 R26(S) <CA> SSBM
S3-83 R5-1 R5-1a
S3-36 G26-2 (101) <CA> M6-1 (Lt) MBMS
S3-71 R10-15 SSBM
PERSIAN Dr
S3-8 R3-7
S3-125 R5-10a
S3-9 R2-1 (45) SSBM
S3-99 G92 <CA> G28-2 (237) <CA> M3-2 M6-2a (↙)
S3-13 G92 <CA> G28-2 (237) <CA> M3-2 M6-2a (↙)
"D5a" LINE
"A3" LINE
"D3" LINE
"D5" LINE
S3-14 G92 <CA> G28-2 (237) <CA> M3-2 M6-2a (↗)
S3-17 R10-7 SSBM
S3-100 G92 <CA> G28-2 (237) <CA> M3-2 M6-2a (↘)
S3-20 G92 <CA> G28-2 (237) <CA> M3-2 M6-2a (↘)
R5-10a
R3-42a Mod
EXPRESS LANE AHEAD 1/4 MILE
S3-30 G8-1 <CA> G8-1 <CA>
Downtown Sunnyvale
Cogswell Polytech College
S3-35 G26-2 (101) <CA> M6-1 (Lt)
S3-117 R26 <CA>
S3-96 D3-1 D3-1
D3-1 D3-1 R1-1 W4-4P
S3-75 W11-2 W16-7P (Lt)
R10-7 R36 (3) <CA> R26
S3-62 D3-1 (ROSS Dr) D3-1 (PERSIAN Dr)
S3-118 R26 <CA>
S3-74 W11-2 W16-7P (Lt)
S3-70 R1-1 W4-4P
S3-69 R1-1 W4-4P
S3-73 W11-2 W16-7P (Rt)
S3-72 W11-2 W16-7P (Lt)
S3-7 G92 <CA> G28-2 (237) <CA> M3-2 M6-2a (↙)
S3-6 G77-4 <CA>
S3-67 Spec 3B
Mathilda 237 EAST
S3-2 G85-6 <CA>
101 NORTH San Francisco
WEST 237 EAST
MATCH LINE S-9
S3-32 W34C (14'-8") <CA>
S3-33 W34C (14'-8") (Lt) <CA>
S3-34 R2-1 (40)
S3-31 G8-1 <CA>
Downtown Sunnyvale

FOR NOTES, ABBREVIATIONS, AND LEGEND, SEE SHEET S-1

APPROVED FOR SIGN WORK ONLY

SIGN PLAN
SCALE: 1" = 50'

S-3

REVISED BY	DATE REVISED
SCV	05/03/18

CALCULATED-DESIGNED BY: STEVE LOUPE
CHECKED BY: SHAWN VOGTMAN
CONSULTANT FUNCTIONAL SUPERVISOR: TIMOTHY J. LEE
STATE OF CALIFORNIA - DEPARTMENT OF TRANSPORTATION

LAST REVISION: 01-15-18
DATE PLOTTED => 6/20/2018
TIME PLOTTED => 11:19:21 AM

X:\237_101_Mathilda\000_CAD\Sheets\OA-Signs\OA-Plans\0413000204oa003.dgn

BORDER LAST REVISED 7/2/2010
USERNAME => Eilif
DGN FILE => 0413000204oa003.dgn
RELATIVE BORDER SCALE IS IN INCHES 0 1 2 3
UNIT 0000
PROJECT NUMBER & PHASE 0413000204

NOTE:

FOR ACCURATE RIGHT OF WAY DATA, CONTACT
RIGHT OF WAY ENGINEERING AT THE DISTRICT OFFICE.

Dist	COUNTY	ROUTE	POST MILES TOTAL PROJECT	SHEET No.	TOTAL SHEETS
04	SCL	101,237	45.2/45.8, 2.7/3.3	293	736

REGISTERED CIVIL ENGINEER — DATE: 6-13-18

PLANS APPROVAL DATE: 6-20-18

REGISTERED PROFESSIONAL ENGINEER — STEVE LOUPE — No. 63575 — Exp. 9/30/18 — CIVIL — STATE OF CALIFORNIA

THE STATE OF CALIFORNIA OR ITS OFFICERS OR AGENTS SHALL NOT BE RESPONSIBLE FOR THE ACCURACY OR COMPLETENESS OF SCANNED COPIES OF THIS PLAN SHEET.

WMH CORPORATION 50 W San Fernando St Suite 950 San Jose, CA 95113	VTA 3331 N First St Building B San Jose, Ca 95134

FURNISH AND INSTALL
SIGN STRUCTURE (LIGHTWEIGHT)
43.9' Lt Sta "M1" 70+31.68 (FSBT)
G85-3 <CA> Mod

237 EAST Milpitas LEFT LANE | 237 WEST Mtn View RIGHT LANE

REMOVE SIGN STRUCTURE
G85-3 <CA>

237 East LEFT LANE | West RIGHT LANE

FOR NOTES, ABBREVIATIONS, AND LEGEND, SEE SHEET S-1

APPROVED FOR SIGN WORK ONLY

SIGN PLAN
SCALE: 1" = 50'

S-4

STATE OF CALIFORNIA - DEPARTMENT OF TRANSPORTATION	CONSULTANT FUNCTIONAL SUPERVISOR	TIMOTHY J. LEE	CALCULATED-DESIGNED BY	STEVE LOUPE	REVISED BY SCV
	CHECKED BY	SHAWN VOGTMAN	DATE REVISED 05/03/18		

LAST REVISION: DATE PLOTTED => 6/20/2018, TIME PLOTTED => 11:19:25 AM

X:\237_101_Mathilda\000_CAD\Sheets\OA-Signs\OA-Plans\0413000204oa004.dgn

BORDER LAST REVISED 7/2/2010 | USERNAME => Eilif, DGN FILE => 0413000204oa004.dgn | RELATIVE BORDER SCALE IS IN INCHES 0 1 2 3 | UNIT 0000 | PROJECT NUMBER & PHASE 0413000204

NOTE:

FOR ACCURATE RIGHT OF WAY DATA, CONTACT
RIGHT OF WAY ENGINEERING AT THE DISTRICT OFFICE.

Dist	COUNTY	ROUTE	POST MILES TOTAL PROJECT	SHEET No.	TOTAL SHEETS
04	SCL	101,237	45.2/45.8, 2.7/3.3	294	736

REGISTERED CIVIL ENGINEER — 6-13-18 DATE

6-20-18
PLANS APPROVAL DATE

STEVE LOUPE No. 63575 Exp. 9/30/18 CIVIL — REGISTERED PROFESSIONAL ENGINEER — STATE OF CALIFORNIA

THE STATE OF CALIFORNIA OR ITS OFFICERS OR AGENTS SHALL NOT BE RESPONSIBLE FOR THE ACCURACY OR COMPLETENESS OF SCANNED COPIES OF THIS PLAN SHEET.

WMH CORPORATION
50 W San Fernando St
Suite 950
San Jose, CA 95113

VTA
3331 N First St
Building B
San Jose, Ca 95134

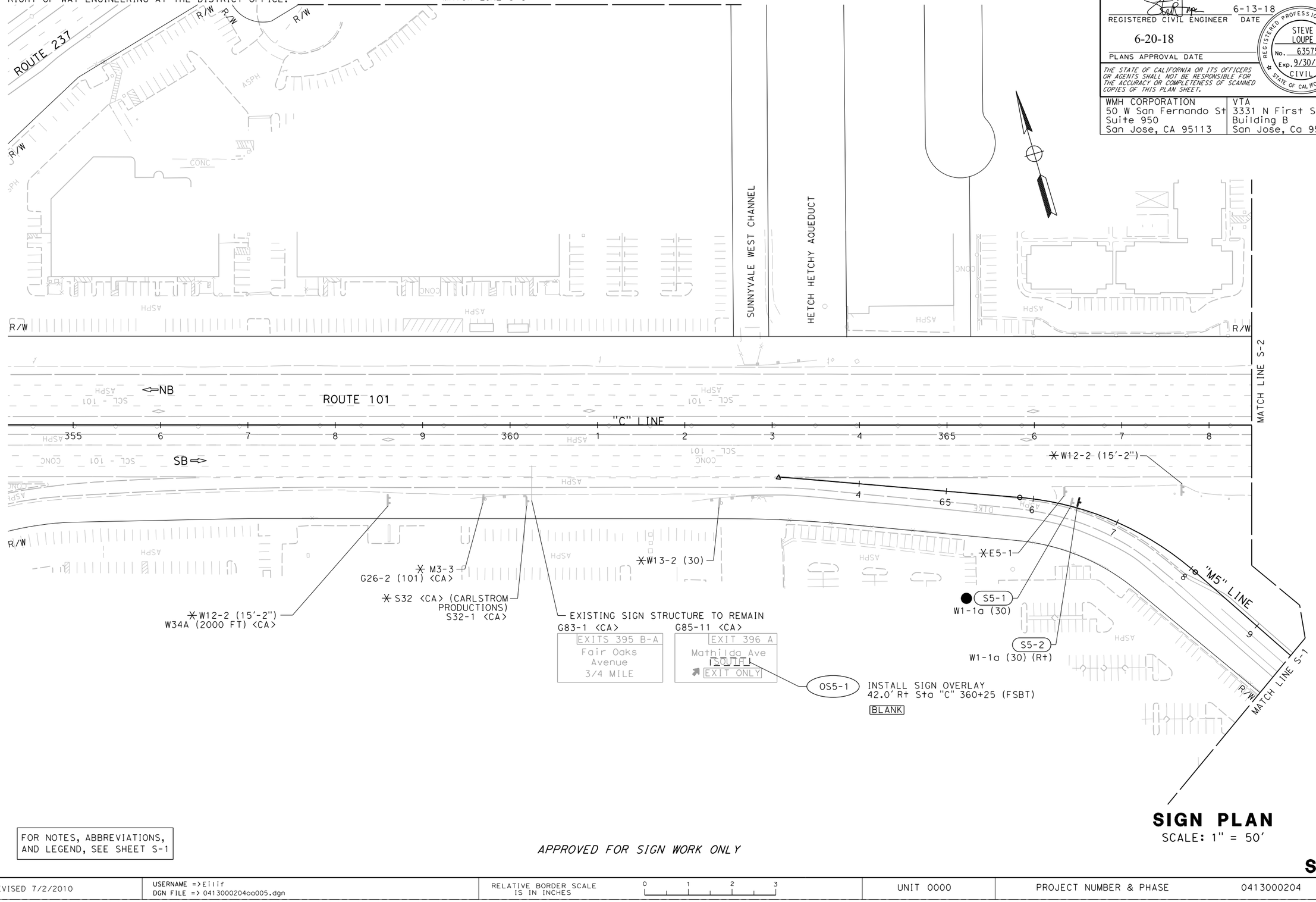

SIGN PLAN

SCALE: 1" = 50'

FOR NOTES, ABBREVIATIONS, AND LEGEND, SEE SHEET S-1

APPROVED FOR SIGN WORK ONLY

S-5

	CALCULATED-DESIGNED BY	CHECKED BY	REVISED BY	DATE REVISED
	STEVE LOUPE	SHAWN VOGTMAN	SCV	05/03/18

CONSULTANT FUNCTIONAL SUPERVISOR: TIMOTHY J. LEE

STATE OF CALIFORNIA - DEPARTMENT OF TRANSPORTATION

Caltrans®

LAST REVISION: 01-15-18 | DATE PLOTTED => 6/20/2018 | TIME PLOTTED => 11:19:29 AM

X:\237_101_Mathilda\000_CAD\Sheets\OA-Signs\OA-Plans\0413000204oa005.dgn

BORDER LAST REVISED 7/2/2010 | USERNAME => Eiiif | DGN FILE => 0413000204oa005.dgn | RELATIVE BORDER SCALE IS IN INCHES 0 1 2 3 | UNIT 0000 | PROJECT NUMBER & PHASE 0413000204

NOTE:

FOR ACCURATE RIGHT OF WAY DATA, CONTACT
RIGHT OF WAY ENGINEERING AT THE DISTRICT OFFICE.

Dist	COUNTY	ROUTE	POST MILES TOTAL PROJECT	SHEET No.	TOTAL SHEETS
04	SCL	101,237	45.2/45.8, 2.7/3.3	295	736

REGISTERED CIVIL ENGINEER — 6-13-18 DATE

6-20-18
PLANS APPROVAL DATE

REGISTERED PROFESSIONAL ENGINEER — STEVE LOUPE No. 63575 Exp. 9/30/18 CIVIL — STATE OF CALIFORNIA

THE STATE OF CALIFORNIA OR ITS OFFICERS OR AGENTS SHALL NOT BE RESPONSIBLE FOR THE ACCURACY OR COMPLETENESS OF SCANNED COPIES OF THIS PLAN SHEET.

WMH CORPORATION 50 W San Fernando St Suite 950 San Jose, CA 95113	VTA 3331 N First St Building B San Jose, Ca 95134

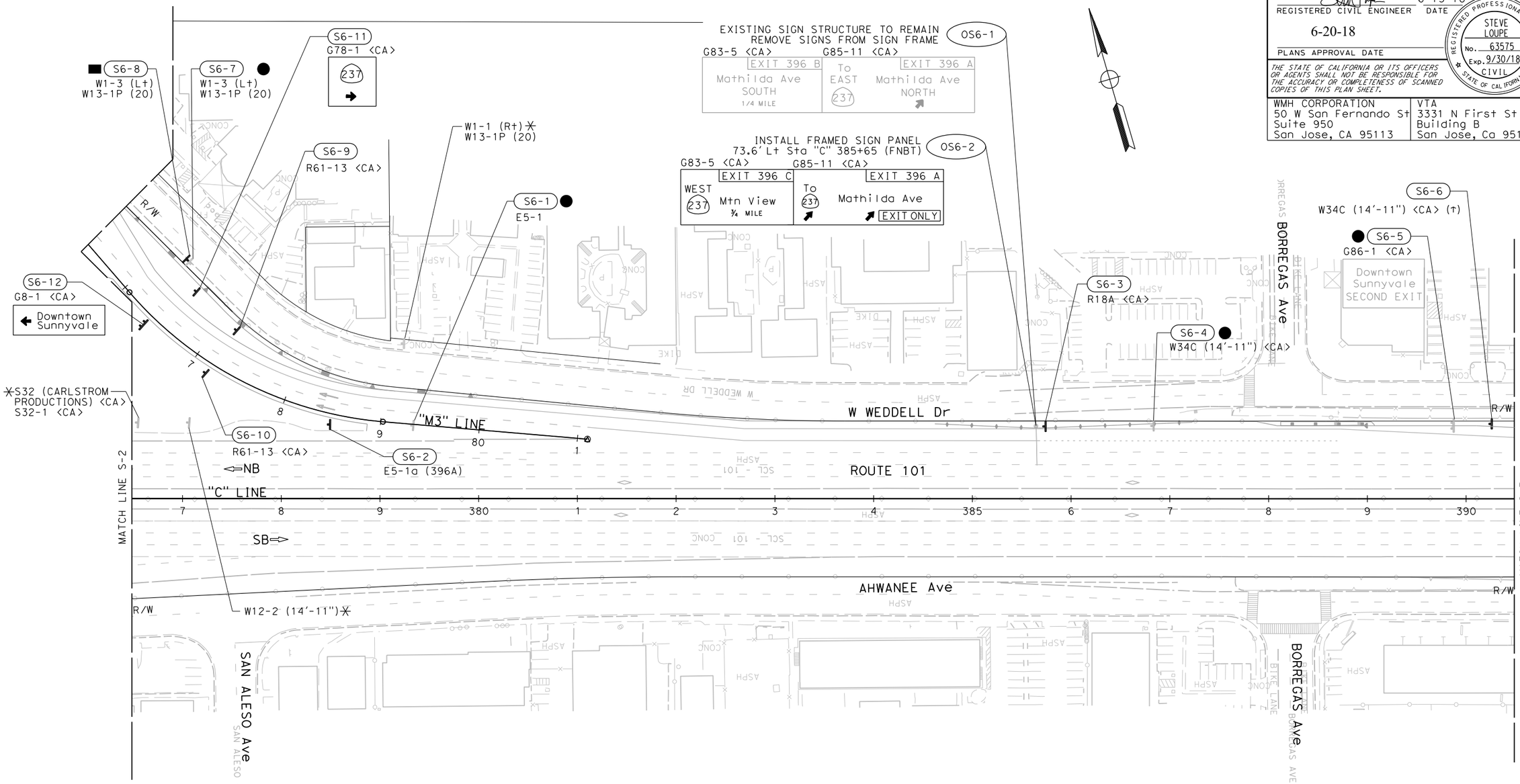

FOR NOTES, ABBREVIATIONS, AND LEGEND, SEE SHEET S-1

APPROVED FOR SIGN WORK ONLY

SIGN PLAN

SCALE: 1" = 50'

S-6

LAST REVISION	DATE PLOTTED => 6/20/2018
01-15-18	TIME PLOTTED => 11:19:32 AM

CALCULATED-DESIGNED BY	REVISED BY	DATE REVISED
CHECKED BY	SHAWN VOGTMAN	05/03/18
SUPERVISOR	STEVE LOUPE	SCV
CONSULTANT FUNCTIONAL SUPERVISOR	TIMOTHY J. LEE	

STATE OF CALIFORNIA - DEPARTMENT OF TRANSPORTATION

X:\237_101_Mathilda\000_CAD\Sheets\OA-Signs\OA-Plans\0413000204oa006.dgn

BORDER LAST REVISED 7/2/2010	USERNAME => Eilif DGN FILE => 0413000204oa006.dgn	RELATIVE BORDER SCALE IS IN INCHES 0 1 2 3	UNIT 0000	PROJECT NUMBER & PHASE 0413000204

NOTE:

FOR ACCURATE RIGHT OF WAY DATA, CONTACT
RIGHT OF WAY ENGINEERING AT THE DISTRICT OFFICE.

Dist	COUNTY	ROUTE	POST MILES TOTAL PROJECT	SHEET No.	TOTAL SHEETS
04	SCL	101,237	45.2/45.8, 2.7/3.3	296	736

REGISTERED CIVIL ENGINEER — 6-13-18 DATE

6-20-18
PLANS APPROVAL DATE

REGISTERED PROFESSIONAL ENGINEER — STEVE LOUPE — No. 63575 — Exp. 9/30/18 — CIVIL — STATE OF CALIFORNIA

THE STATE OF CALIFORNIA OR ITS OFFICERS OR AGENTS SHALL NOT BE RESPONSIBLE FOR THE ACCURACY OR COMPLETENESS OF SCANNED COPIES OF THIS PLAN SHEET.

WMH CORPORATION 50 W San Fernando St Suite 950 San Jose, CA 95113	VTA 3331 N First St Building B San Jose, Ca 95134

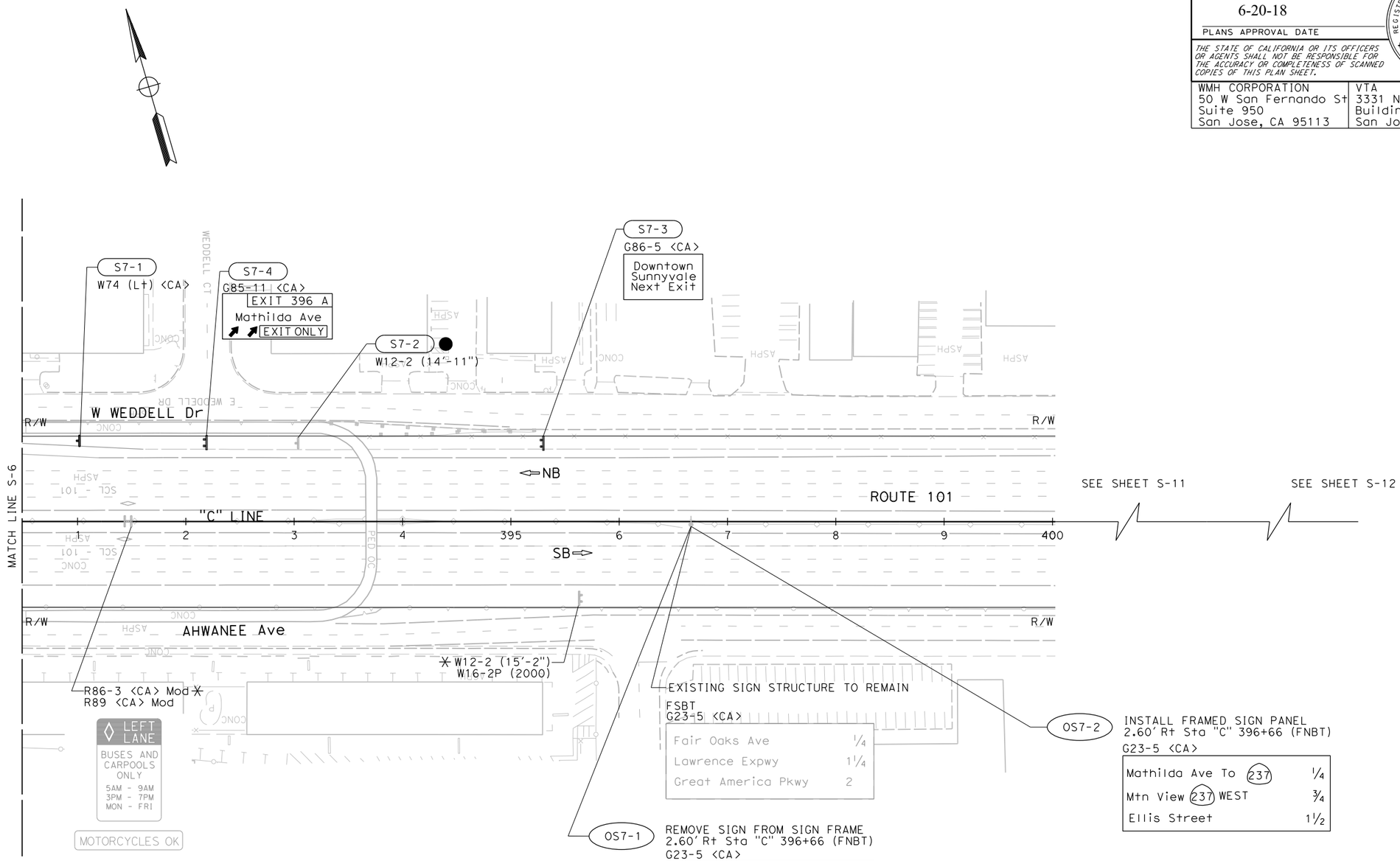

FOR NOTES, ABBREVIATIONS, AND LEGEND, SEE SHEET S-1

APPROVED FOR SIGN WORK ONLY

SIGN PLAN

SCALE: 1" = 50'

S-7

CALCULATED-DESIGNED BY			
CHECKED BY			
STEVE LOUPE	SHAWN VOGTMAN	REVISED BY	SCV
		DATE REVISED	05/03/18

CONSULTANT FUNCTIONAL SUPERVISOR: TIMOTHY J. LEE

STATE OF CALIFORNIA - DEPARTMENT OF TRANSPORTATION — Caltrans

X:\237_101_Mathilda\000_CAD\Sheets\OA-Signs\OA-Plans\0413000204oa007.dgn

LAST REVISION: 01-15-18
DATE PLOTTED => 6/20/2018
TIME PLOTTED => 11:19:36 AM

BORDER LAST REVISED 7/2/2010	USERNAME => Eilif DGN FILE => 0413000204oa007.dgn	RELATIVE BORDER SCALE IS IN INCHES 0 1 2 3	UNIT 0000	PROJECT NUMBER & PHASE	0413000204

NOTE:

FOR ACCURATE RIGHT OF WAY DATA, CONTACT
RIGHT OF WAY ENGINEERING AT THE DISTRICT OFFICE.

Dist	COUNTY	ROUTE	POST MILES TOTAL PROJECT	SHEET No.	TOTAL SHEETS
04	SCL	101,237	45.2/45.8, 2.7/3.3	297	736

REGISTERED CIVIL ENGINEER — 6-13-18 DATE

6-20-18
PLANS APPROVAL DATE

REGISTERED PROFESSIONAL ENGINEER — STEVE LOUPE No. 63575 Exp. 9/30/18 CIVIL — STATE OF CALIFORNIA

THE STATE OF CALIFORNIA OR ITS OFFICERS OR AGENTS SHALL NOT BE RESPONSIBLE FOR THE ACCURACY OR COMPLETENESS OF SCANNED COPIES OF THIS PLAN SHEET.

WMH CORPORATION 50 W San Fernando St Suite 950 San Jose, CA 95113	VTA 3331 N First St Building B San Jose, Ca 95134

R61-9 <CA> Mod

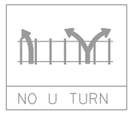

DETAIL C

R10-15 Mod (Rt)

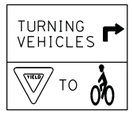

DETAIL D

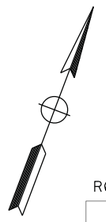

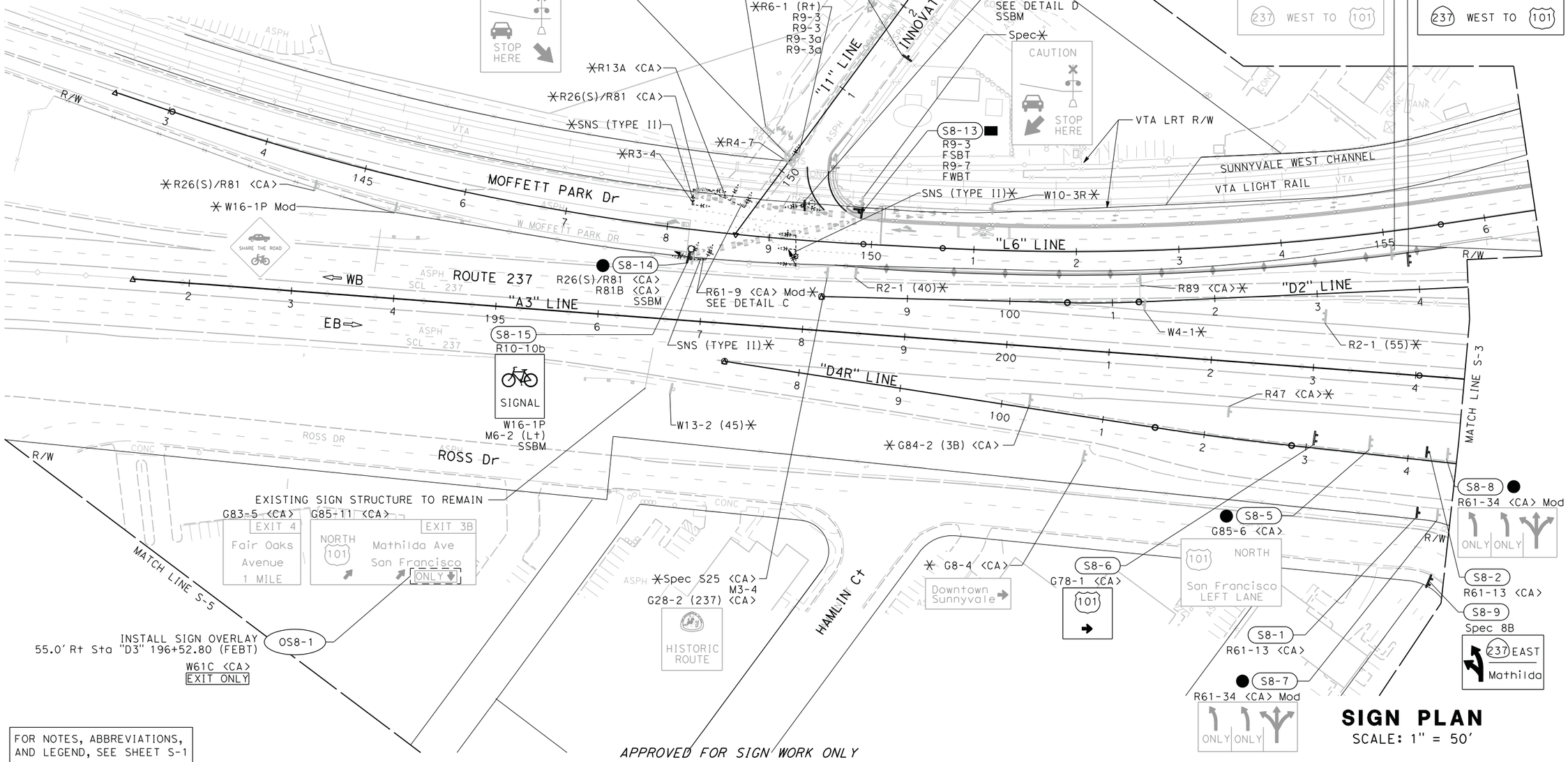

FOR NOTES, ABBREVIATIONS, AND LEGEND, SEE SHEET S-1

APPROVED FOR SIGN WORK ONLY

SIGN PLAN

SCALE: 1" = 50'

S-8

REVISED BY	DATE REVISED
SCV	05/03/18

CALCULATED-DESIGNED BY: STEVE LOUPE
CHECKED BY: SHAWN VOGTMAN
CONSULTANT FUNCTIONAL SUPERVISOR: TIMOTHY J. LEE
STATE OF CALIFORNIA - DEPARTMENT OF TRANSPORTATION
Caltrans

LAST REVISION — DATE PLOTTED => 6/20/2018, TIME PLOTTED => 11:19:41 AM
01-15-18

X:\237_101_Mathilda\000_CAD\Sheets\OA-Signs\OA-Plans\0413000204oa008.dgn

BORDER LAST REVISED 7/2/2010 | USERNAME => Eilif | DGN FILE => 0413000204oa008.dgn | RELATIVE BORDER SCALE IS IN INCHES 0 1 2 3 | UNIT 0000 | PROJECT NUMBER & PHASE 0413000204

NOTE:

FOR ACCURATE RIGHT OF WAY DATA, CONTACT
RIGHT OF WAY ENGINEERING AT THE DISTRICT OFFICE.

Dist	COUNTY	ROUTE	POST MILES TOTAL PROJECT	SHEET No.	TOTAL SHEETS
04	SCL	101,237	45.2/45.8, 2.7/3.3	298	736

REGISTERED CIVIL ENGINEER — 6-13-18 DATE

PLANS APPROVAL DATE — 6-20-18

REGISTERED PROFESSIONAL ENGINEER — STEVE LOUPE — No. 63575 — Exp. 9/30/18 — CIVIL — STATE OF CALIFORNIA

THE STATE OF CALIFORNIA OR ITS OFFICERS OR AGENTS SHALL NOT BE RESPONSIBLE FOR THE ACCURACY OR COMPLETENESS OF SCANNED COPIES OF THIS PLAN SHEET.

WMH CORPORATION 50 W San Fernando St Suite 950 San Jose, CA 95113	VTA 3331 N First St Building B San Jose, Ca 95134

MATCH LINE S-4

MATCH LINE S-3

MATCH LINE (SEE BELOW)

MATCH LINE (SEE ABOVE)

BORDEAUX Dr

MOFFETT PARK Dr

PERSIAN Dr

BRADFORD Dr

PLAZA Dr

BORREGAS Ave

ROUTE 237

"A3" LINE

"D3" LINE

"D5" LINE

WB

EB

CITY R/W

STORAGE

S9-11 R61-36 <CA> Mod — ONLY

S9-2 R26(S) <CA> SSBM

S9-1 W34C (14'-8") <CA> R26(S) <CA> SSBM

S9-4 D3-1 (MOFFETT PARK Dr) / D3-1 (BORDEAUX Dr)

S9-7 W3-3

S9-38 W11-15

S9-3 R10-7 R26(S) <CA> SSBM — TCE

S9-5 R1-1 R26 <CA> SSBM

S9-39 R1-5 (Lt) FSBT R9-3 FNBT

S9-30 W11-2 W16-7P (Rt)

S9-29 W11-2 W16-7P (Lt)

S9-32 W11-2 W16-9P

S9-41 R1-6

S9-31 W11-2 W16-7P (Rt)

S9-40 R1-6

S9-28 W11-2 W16-7P (Lt)

R26(S) <CA> R10-7 R26(S) <CA>

W11-2 W16-7P

R26 <CA> R81 <CA> R5-1b

W11-2 W16-7P

S9-15 R26/R81 <CA> PER C.O.S. - 4E-2 SSBM — NO PARKING ANY TIME — BIKE LANE — BIKES WRONG WAY

S9-24 R26/R81 <CA> PER C.O.S. - 4E-2 — NO PARKING ANY TIME — BIKE LANE — BIKES WRONG WAY

S9-16 R26/R81 <CA> PER C.O.S. 4E-2 SSBM — NO PARKING ANY TIME — BIKE LANE — BIKES WRONG WAY

S9-33 W11-2 W16-9P SSBM

S9-18 R2-1 (40) SSBM

S9-17 R26/R81 <CA> PER C.O.S. - 4E-2 SSBM — NO PARKING ANY TIME — BIKE LANE — BIKES WRONG WAY

S9-19 R2-1 (40) R26/R81 <CA> PER C.O.S. - 4E-2 SSBM — NO PARKING ANY TIME — BIKE LANE — BIKES WRONG WAY

S9-20 R26(S)/R81 <CA> SSBM — NO STOPPING ANY TIME — BIKE LANE — BIKES WRONG WAY

S9-21 R2-1 (40) R26/R81 <CA> PER C.O.S. - 4E-2 SSBM — NO PARKING ANY TIME — BIKE LANE — BIKES WRONG WAY

S9-42 W11-1 W16-5P (Lt) SSBM

R26(S) <CA> R26(S) <CA>

R1-1

S9-43 G85-11 <CA> — EXIT 3B — Mathilda Ave — EXIT ONLY

R4-11 R1-5 (Lt)

R26/R81 <CA> PER C.O.S. - 4E-2

R1-1

EXISTING SIGN STRUCTURE TO REMAIN G83-5 <CA> — EXIT 4 — Fair Oaks Ave — NEXT EXIT

S9-46 R18A <CA>

S9-47 R18A <CA>

S9-34 R81 <CA> R81B <CA>

S9-36 W11-1 W16-1P

S9-22 W11-15

S9-44 W11-2 W16-9P

S9-45 W11-2 W16-9P MBMS

S9-35 R9-3 R5-6

S9-23 R26(S)/R81 <CA> — NO STOPPING ANY TIME — BIKE LANE — BIKES WRONG WAY

S9-6 W3-3

S9-8 R61-15 <CA>

S9-12 R26 <CA> W1-7 OM1-1

S9-26 R81 <CA> R81A <CA>

S9-9 R61-15 <CA>

S9-37 W11-15

S9-14 E5-1a (3B)

S9-25 R2-1 (40) R26(S) <CA>

S9-27 R2-1 (40)

S9-13 E5-1a (3B)

S9-10 R61-36 <CA> Mod — ONLY

FWBT G83 <CA> — 237 Mtn View

G83-5 <CA> — EXIT 3A — NORTH 101 San Francisco JCT ½ MI

G85-11 <CA> — EXIT 3B — SOUTH 101 Mathilda Ave Sunnyvale — EXIT ONLY

EXISTING SIGN STRUCTURE TO REMAIN

REMOVE SIGN FROM SIGN FRAME G85-11 <CA>

OS9-1

INSTALL FRAMED SIGN PANEL 63.0' Lt Sta "A3" 221+83 (FWBT)

OS9-2

FEBT G83-5 <CA> — EXIT 5 — Lawrence Expwy Caribbean Drive — SECOND EXIT

G85-11 <CA> — EXIT 3B — To 101 Mathilda Ave — EXIT ONLY

FOR NOTES, ABBREVIATIONS, AND LEGEND, SEE SHEET S-1

APPROVED FOR SIGN WORK ONLY

SIGN PLAN

SCALE: 1" = 50'

S-9

REVISED BY	DATE REVISED
SCV	05/03/18
STEVE LOUPE	SHAWN VOGTMAN

CALCULATED-DESIGNED BY / CHECKED BY

CONSULTANT FUNCTIONAL SUPERVISOR: TIMOTHY J. LEE

STATE OF CALIFORNIA - DEPARTMENT OF TRANSPORTATION — Caltrans

X:\237_101_Mathilda\000_CAD\Sheets\OA-Signs\OA-Plans\0413000204oa009.dgn

LAST REVISION: 01-15-18 | DATE PLOTTED => 6/20/2018 | TIME PLOTTED => 11:19:45 AM

BORDER LAST REVISED 7/2/2010 | USERNAME => Eiiif | DGN FILE => 0413000204oa009.dgn | RELATIVE BORDER SCALE IS IN INCHES 0 1 2 3 | UNIT 0000 | PROJECT NUMBER & PHASE 0413000204

NOTE:

FOR ACCURATE RIGHT OF WAY DATA, CONTACT
RIGHT OF WAY ENGINEERING AT THE DISTRICT OFFICE.

Dist	COUNTY	ROUTE	POST MILES TOTAL PROJECT	SHEET No.	TOTAL SHEETS
04	SCL	101,237	45.2/45.8, 2.7/3.3	299	736

REGISTERED CIVIL ENGINEER — 6-13-18 DATE

6-20-18
PLANS APPROVAL DATE

REGISTERED PROFESSIONAL ENGINEER — STEVE LOUPE — No. 63575 — Exp. 9/30/18 — CIVIL — STATE OF CALIFORNIA

THE STATE OF CALIFORNIA OR ITS OFFICERS OR AGENTS SHALL NOT BE RESPONSIBLE FOR THE ACCURACY OR COMPLETENESS OF SCANNED COPIES OF THIS PLAN SHEET.

WMH CORPORATION
50 W San Fernando St
Suite 950
San Jose, CA 95113

VTA
3331 N First St
Building B
San Jose, Ca 95134

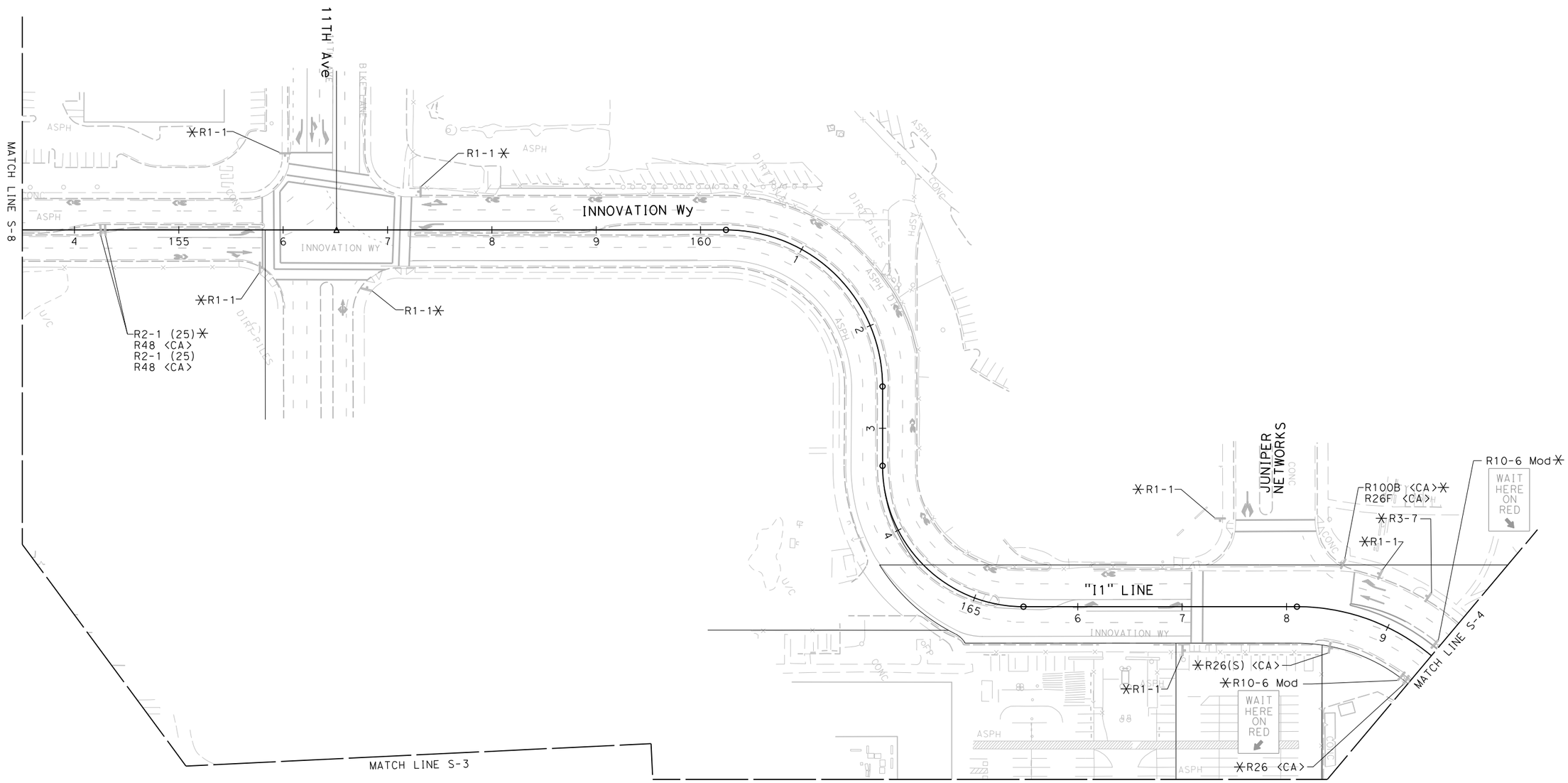

FOR NOTES, ABBREVIATIONS, AND LEGEND, SEE SHEET S-1

APPROVED FOR SIGN WORK ONLY

SIGN PLAN

SCALE: 1" = 50'

S-10

STATE OF CALIFORNIA - DEPARTMENT OF TRANSPORTATION	Caltrans
CONSULTANT FUNCTIONAL SUPERVISOR	TIMOTHY J. LEE
CALCULATED-DESIGNED BY	STEVE LOUPE
CHECKED BY	SHAWN VOGTMAN
REVISED BY	SCV
DATE REVISED	05/03/18

LAST REVISION 01-15-18 — DATE PLOTTED => 6/20/2018 — TIME PLOTTED => 11:19:51 AM

X:\237_101_Mathilda\000_CAD\Sheets\OA-Signs\OA-Plans\0413000204oa010.dgn

BORDER LAST REVISED 7/2/2010 | USERNAME => Eilif | DGN FILE => 0413000204oa010.dgn | RELATIVE BORDER SCALE IS IN INCHES 0 1 2 3 | UNIT 0000 | PROJECT NUMBER & PHASE 0413000204

Dist	COUNTY	ROUTE	POST MILES TOTAL PROJECT	SHEET No.	TOTAL SHEETS
04	SCL	101,237	45.2/45.8, 2.7/3.3	300	736

REGISTERED CIVIL ENGINEER 6-13-18 DATE

6-20-18
PLANS APPROVAL DATE

REGISTERED PROFESSIONAL ENGINEER STEVE LOUPE No. 63575 Exp. 9/30/18 CIVIL STATE OF CALIFORNIA

THE STATE OF CALIFORNIA OR ITS OFFICERS OR AGENTS SHALL NOT BE RESPONSIBLE FOR THE ACCURACY OR COMPLETENESS OF SCANNED COPIES OF THIS PLAN SHEET.

WMH CORPORATION
50 W San Fernando St
Suite 950
San Jose, CA 95113

VTA
3331 N First St
Building B
San Jose, Ca 95134

NOTE:

FOR ACCURATE RIGHT OF WAY DATA, CONTACT RIGHT OF WAY ENGINEERING AT THE DISTRICT OFFICE.

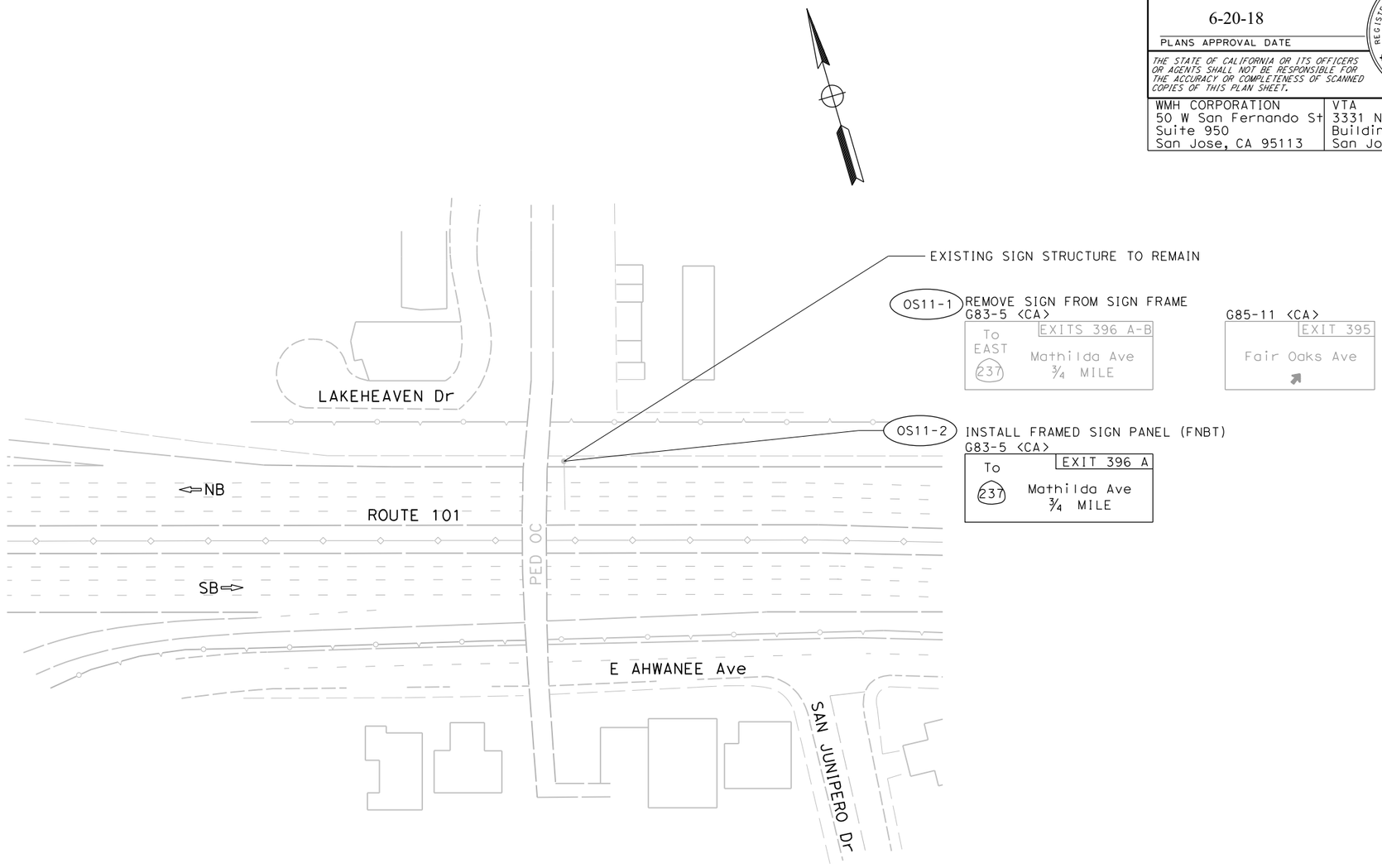

FOR NOTES, ABBREVIATIONS, AND LEGEND, SEE SHEET S-1

APPROVED FOR SIGN WORK ONLY

SIGN PLAN

SCALE: 1" = 50'

S-11

STATE OF CALIFORNIA - DEPARTMENT OF TRANSPORTATION

Caltrans

CONSULTANT FUNCTIONAL SUPERVISOR: TIMOTHY J. LEE

CALCULATED-DESIGNED BY: STEVE LOUPE

CHECKED BY: SHAWN VOGTMAN

REVISED BY: SCV

DATE REVISED: 05/03/18

X:\237_101_Mathilda\000_CAD\Sheets\OA-Signs\OA-Plans\0413000204oa011.dgn

LAST REVISION 01-15-18

DATE PLOTTED => 6/20/2018
TIME PLOTTED => 11:19:56 AM

BORDER LAST REVISED 7/2/2010

USERNAME => Eilif
DGN FILE => 0413000204oa011.dgn

RELATIVE BORDER SCALE IS IN INCHES 0 1 2 3

UNIT 0000

PROJECT NUMBER & PHASE 0413000204

Dist	COUNTY	ROUTE	POST MILES TOTAL PROJECT	SHEET No.	TOTAL SHEETS
04	SCL	101,237	45.2/45.8, 2.7/3.3	301	736

REGISTERED CIVIL ENGINEER 6-13-18 DATE

6-20-18
PLANS APPROVAL DATE

REGISTERED PROFESSIONAL ENGINEER STEVE LOUPE No. 63575 Exp. 9/30/18 CIVIL STATE OF CALIFORNIA

THE STATE OF CALIFORNIA OR ITS OFFICERS OR AGENTS SHALL NOT BE RESPONSIBLE FOR THE ACCURACY OR COMPLETENESS OF SCANNED COPIES OF THIS PLAN SHEET.

WMH CORPORATION
50 W San Fernando St
Suite 950
San Jose, CA 95113

VTA
3331 N First St
Building B
San Jose, Ca 95134

NOTE:

FOR ACCURATE RIGHT OF WAY DATA, CONTACT RIGHT OF WAY ENGINEERING AT THE DISTRICT OFFICE.

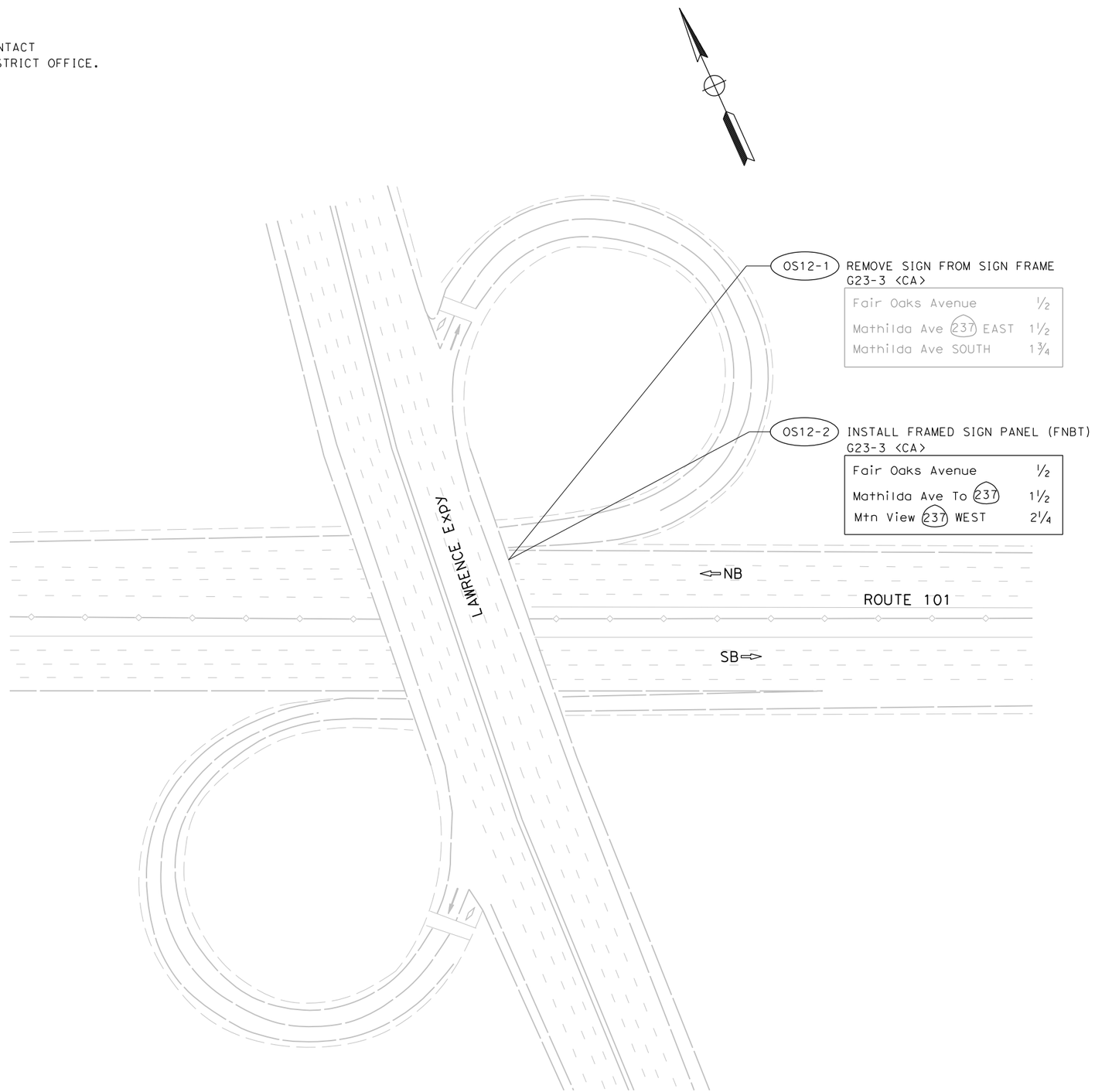

FOR NOTES, ABBREVIATIONS, AND LEGEND, SEE SHEET S-1

APPROVED FOR SIGN WORK ONLY

SIGN PLAN

SCALE: 1" = 50'

S-12

STATE OF CALIFORNIA - DEPARTMENT OF TRANSPORTATION
Caltrans

CONSULTANT FUNCTIONAL SUPERVISOR: TIMOTHY J. LEE
CALCULATED-DESIGNED BY: STEVE LOUPE
CHECKED BY: SHAWN VOGTMAN
REVISED BY: SCV
DATE REVISED: 05/03/18

X:\237_101_Mathilda\000_CAD\Sheets\OA-Signs\OA-Plans\0413000204oa012.dgn

LAST REVISION 01-15-18
DATE PLOTTED => 6/20/2018
TIME PLOTTED => 11:20:00 AM

BORDER LAST REVISED 7/2/2010
USERNAME => Eilif
DGN FILE => 0413000204oa012.dgn
RELATIVE BORDER SCALE IS IN INCHES 0 1 2 3
UNIT 0000
PROJECT NUMBER & PHASE 0413000204

Dist	COUNTY	ROUTE	POST MILES TOTAL PROJECT	SHEET No.	TOTAL SHEETS
04	SCL	101,237	45.2/45.8, 2.7/3.3	303	736

REGISTERED CIVIL ENGINEER 6-13-18 DATE

6-20-18
PLANS APPROVAL DATE

REGISTERED PROFESSIONAL ENGINEER STEVE LOUPE No. 63575 Exp. 9/30/18 CIVIL STATE OF CALIFORNIA

THE STATE OF CALIFORNIA OR ITS OFFICERS OR AGENTS SHALL NOT BE RESPONSIBLE FOR THE ACCURACY OR COMPLETENESS OF SCANNED COPIES OF THIS PLAN SHEET.

WMH CORPORATION
50 W San Fernando St
Suite 950
San Jose, CA 95113

VTA
3331 N First St
Building B
San Jose, Ca 95134

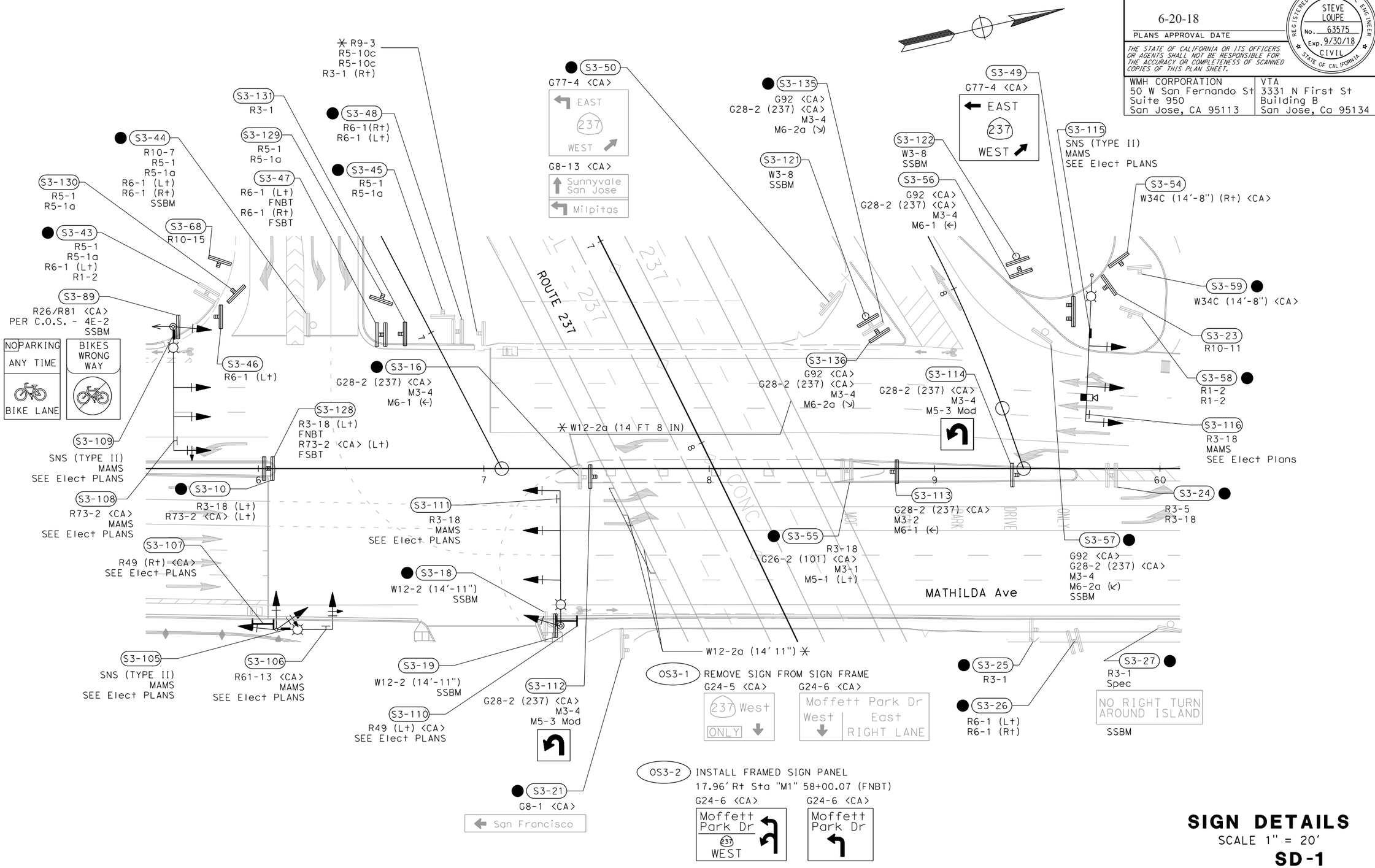

SIGN DETAILS

SCALE 1" = 20'

SD-1

STATE OF CALIFORNIA - DEPARTMENT OF TRANSPORTATION

Caltrans

CONSULTANT FUNCTIONAL SUPERVISOR: TIMOTHY J. LEE

CALCULATED-DESIGNED BY: DIANNE A. GALVEZ

CHECKED BY: STEVE LOUPE

REVISED BY: SCV

DATE REVISED: 05/03/18

X:\237_101_Mathilda\000_CAD\Sheets\OA-Signs\OB-Details\0413000204ob001.dgn

LAST REVISION 01-15-18

DATE PLOTTED => 6/20/2018
TIME PLOTTED => 11:19:59 AM

Dist	COUNTY	ROUTE	POST MILES TOTAL PROJECT	SHEET No.	TOTAL SHEETS
04	SCL	101,237	45.2/45.8, 2.7/3.3	303	736

REGISTERED CIVIL ENGINEER 6-13-18 DATE

6-20-18
PLANS APPROVAL DATE

REGISTERED PROFESSIONAL ENGINEER STEVE LOUPE No. 63575 Exp. 9/30/18 CIVIL STATE OF CALIFORNIA

THE STATE OF CALIFORNIA OR ITS OFFICERS OR AGENTS SHALL NOT BE RESPONSIBLE FOR THE ACCURACY OR COMPLETENESS OF SCANNED COPIES OF THIS PLAN SHEET.

WMH CORPORATION
50 W San Fernando St
Suite 950
San Jose, CA 95113

VTA
3331 N First St
Building B
San Jose, Ca 95134

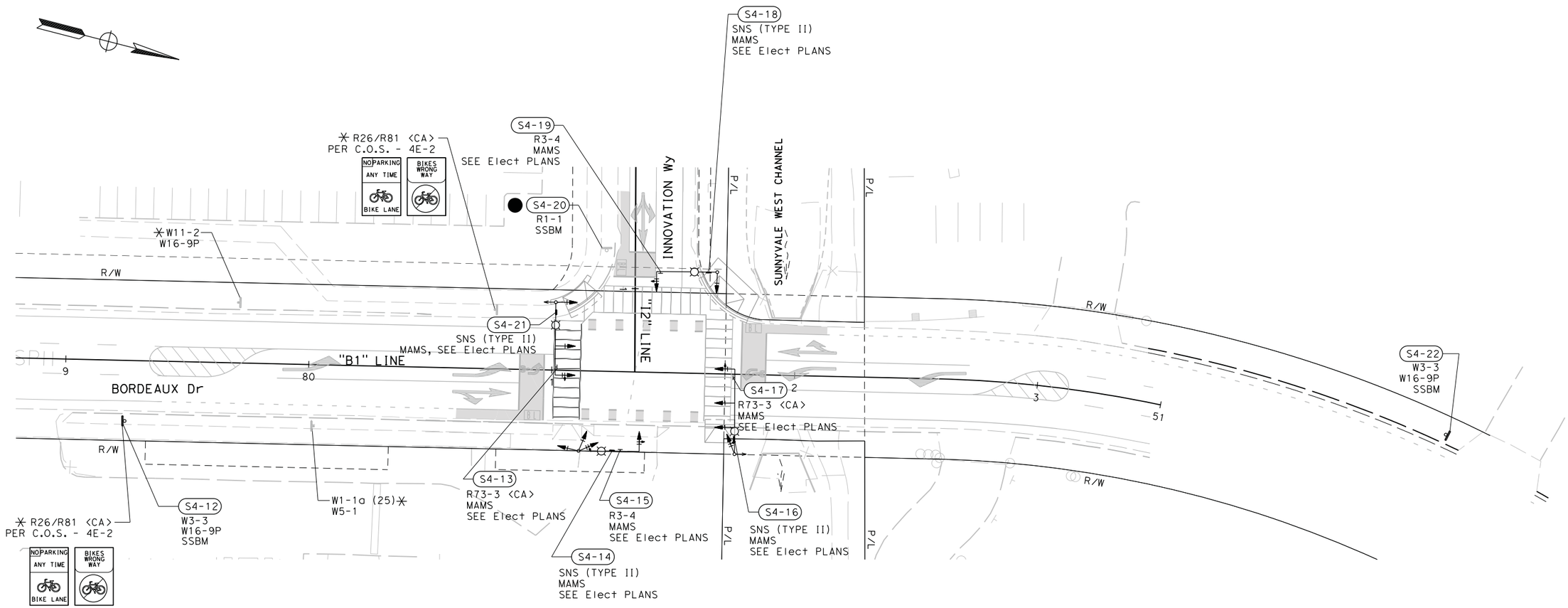

SIGN DETAILS

SCALE 1" = 20'

SD-2

STATE OF CALIFORNIA - DEPARTMENT OF TRANSPORTATION

Caltrans

CONSULTANT FUNCTIONAL SUPERVISOR: TIMOTHY J. LEE

CALCULATED-DESIGNED BY: DIANNE A. GALVEZ

CHECKED BY: STEVE LOUPE

REVISED BY: SCV

DATE REVISED: 05/03/18

X:\237_101_Mathilda\000_CAD\Sheets\OA-Signs\OB-Details\0413000204ob002.dgn

LAST REVISION 01-15-18

DATE PLOTTED => 6/20/2018
TIME PLOTTED => 11:20:05 AM

Dist	COUNTY	ROUTE	POST MILES TOTAL PROJECT	SHEET No.	TOTAL SHEETS
04	SCL	101,237	45.2/45.8, 2.7/3.3	304	736

REGISTERED CIVIL ENGINEER 6-13-18 DATE

6-20-18
PLANS APPROVAL DATE

REGISTERED PROFESSIONAL ENGINEER STEVE LOUPE No. 63575 Exp. 9/30/18 CIVIL STATE OF CALIFORNIA

THE STATE OF CALIFORNIA OR ITS OFFICERS OR AGENTS SHALL NOT BE RESPONSIBLE FOR THE ACCURACY OR COMPLETENESS OF SCANNED COPIES OF THIS PLAN SHEET.

WMH CORPORATION
50 W San Fernando St
Suite 950
San Jose, CA 95113

VTA
3331 N First St
Building B
San Jose, Ca 95134

NOTES:
1. FOR SIGN MOUNTING DETAILS AT LIGHTWEIGHT SIGN STRUCTURE, SEE SHEET SD-27. FOR ADDITIONAL DETAILS, REFER TO STD PLANS S48-S50.
2. FOR SIGN STRUCTURE WALKWAY REMOVAL AND BRIDGE MOUNTED SIGN DETAILS, SEE SHEETS SD-28 AND SD-29.

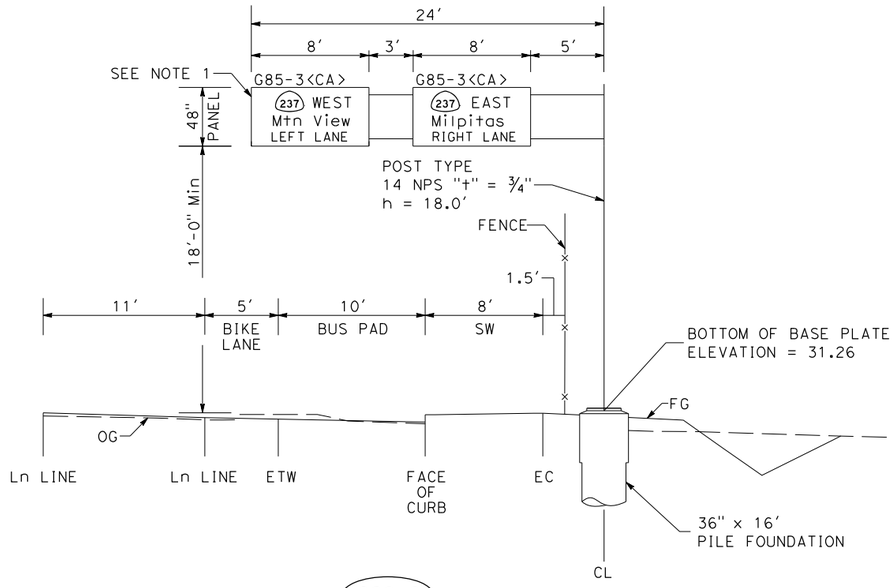

OS2-2

FURNISH AND INSTALL SIGN STRUCTURE (LIGHTWEIGHT)
75.27' Rt "M1" 48+51.00 (FNBT)

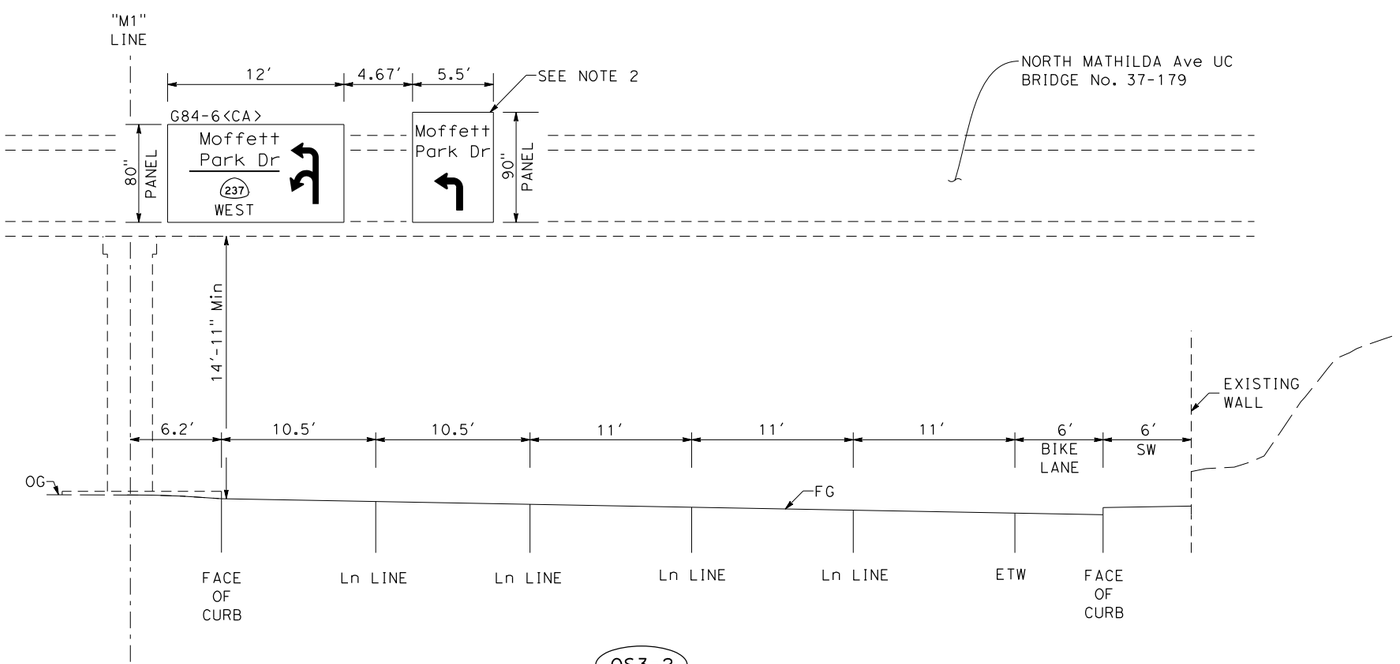

OS3-2

INSTALL SIGN PANEL ON EXISTING FRAME (FNBT)
17.96' Rt "M1" 58+00.07

NORTH MATHILDA Ave UC (Exist)
BRIDGE NO. 37-179

SIGN DETAILS
NO SCALE
SD-3

STATE OF CALIFORNIA - DEPARTMENT OF TRANSPORTATION
Caltrans
CONSULTANT FUNCTIONAL SUPERVISOR: TIMOTHY J. LEE
CALCULATED-DESIGNED BY: DIANNE A. GALVEZ
CHECKED BY: STEVE LOUPE
REVISED BY: SCV
DATE REVISED: 05/03/18

X:\237_101_Mathilda\000_CAD\Sheets\OA-Signs\OB-Details\0413000204ob003.dgn

LAST REVISION 01-15-18
DATE PLOTTED => 6/20/2018
TIME PLOTTED => 11:20:08 AM

Dist	COUNTY	ROUTE	POST MILES TOTAL PROJECT	SHEET No.	TOTAL SHEETS
04	SCL	101,237	45.2/45.8, 2.7/3.3	305	736

REGISTERED CIVIL ENGINEER — 6-13-18 DATE

6-20-18
PLANS APPROVAL DATE

STEVE LOUPE No. 63575 Exp. 9/30/18 CIVIL — REGISTERED PROFESSIONAL ENGINEER — STATE OF CALIFORNIA

THE STATE OF CALIFORNIA OR ITS OFFICERS OR AGENTS SHALL NOT BE RESPONSIBLE FOR THE ACCURACY OR COMPLETENESS OF SCANNED COPIES OF THIS PLAN SHEET.

WMH CORPORATION 50 W San Fernando St Suite 950 San Jose, CA 95113	VTA 3331 N First St Building B San Jose, Ca 95134

NOTE:
FOR SIGN MOUNTING DETAILS AT LIGHTWEIGHT SIGN STRUCTURE, SEE SHEET SD-27. FOR ADDITIONAL DETAILS, REFER TO STD PLANS S48-S50.

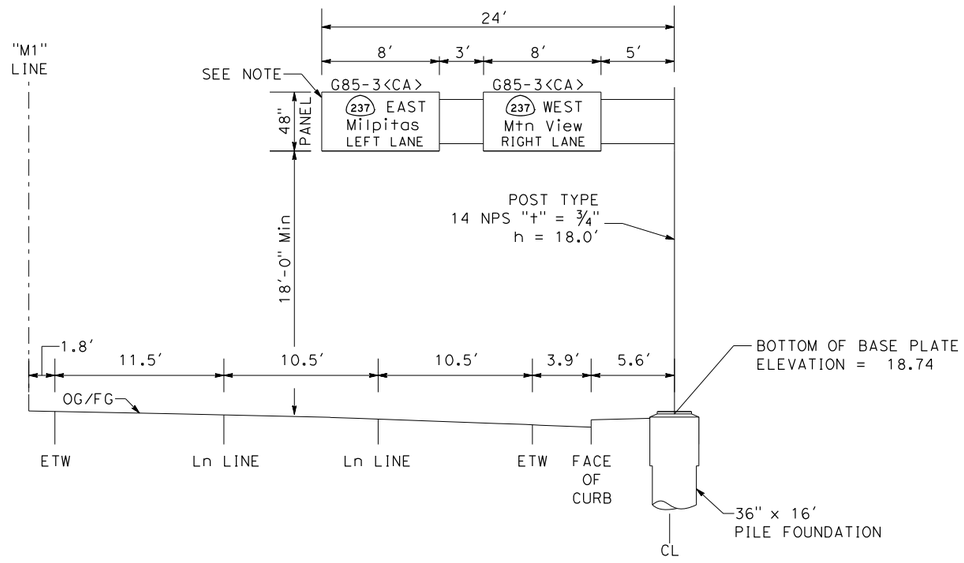

OS4-1

FURNISH AND INSTALL SIGN STRUCTURE (LIGHTWEIGHT)
43.96′ Lt "M1" 70+31.68 (FSBT)

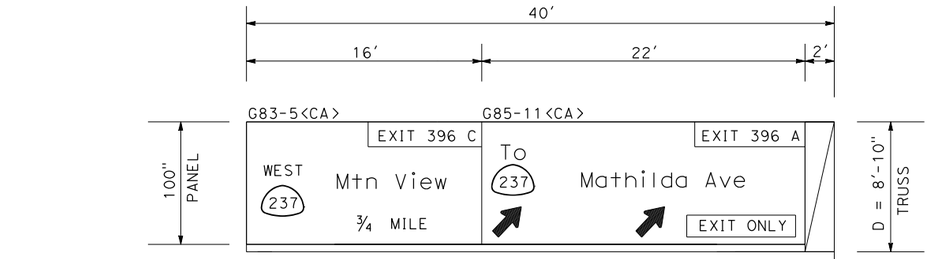

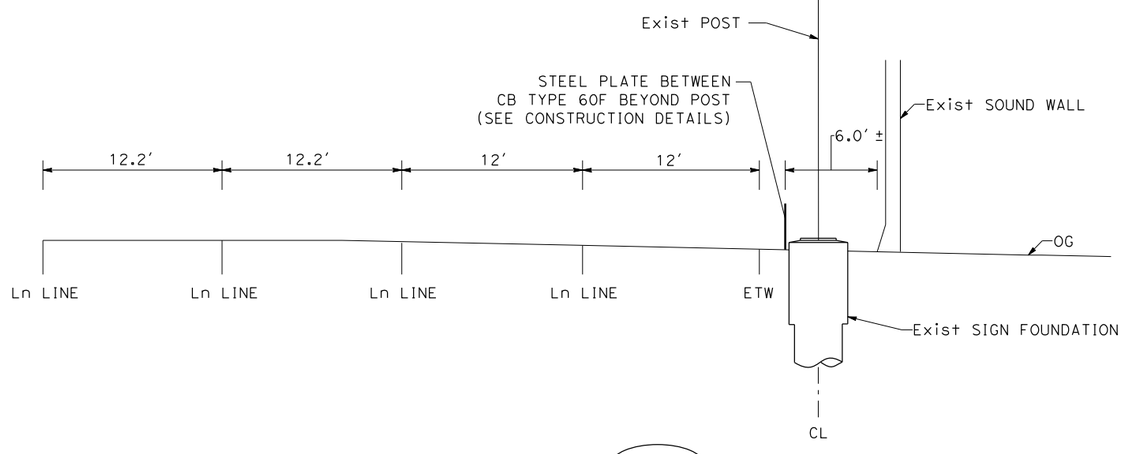

OS6-2

INSTALL SIGN PANEL ON EXISTING FRAME
73.60′ Lt "C" 385+65 (FNBT)

SIGN DETAILS

NO SCALE

SD-4

DATE PLOTTED => 6/20/2018
TIME PLOTTED => 11:20:14 AM
LAST REVISION 01-15-18

STATE OF CALIFORNIA - DEPARTMENT OF TRANSPORTATION
Caltrans
CONSULTANT FUNCTIONAL SUPERVISOR: TIMOTHY J. LEE
CALCULATED-DESIGNED BY: DIANNE A. GALVEZ
CHECKED BY: STEVE LOUPE
REVISED BY: SCV
DATE REVISED: 05/03/18

X:\237_101_Mathilda\000_CAD\Sheets\0A-Signs\0B-Details\04130002040b004.dgn

BORDER LAST REVISED 7/2/2010 | USERNAME => Eilif | DGN FILE => 0413000204ob004.dgn | RELATIVE BORDER SCALE IS IN INCHES 0 1 2 3 | UNIT 0000 | PROJECT NUMBER & PHASE 0413000204

Dist	COUNTY	ROUTE	POST MILES TOTAL PROJECT	SHEET No.	TOTAL SHEETS
04	SCL	101,237	45.2/45.8, 2.7/3.3	306	736

REGISTERED CIVIL ENGINEER — 6-13-18 DATE

6-20-18
PLANS APPROVAL DATE

STEVE LOUPE No. 63575 Exp. 9/30/18 CIVIL — REGISTERED PROFESSIONAL ENGINEER — STATE OF CALIFORNIA

THE STATE OF CALIFORNIA OR ITS OFFICERS OR AGENTS SHALL NOT BE RESPONSIBLE FOR THE ACCURACY OR COMPLETENESS OF SCANNED COPIES OF THIS PLAN SHEET.

WMH CORPORATION 50 W San Fernando St Suite 950 San Jose, CA 95113	VTA 3331 N First St Building B San Jose, Ca 95134

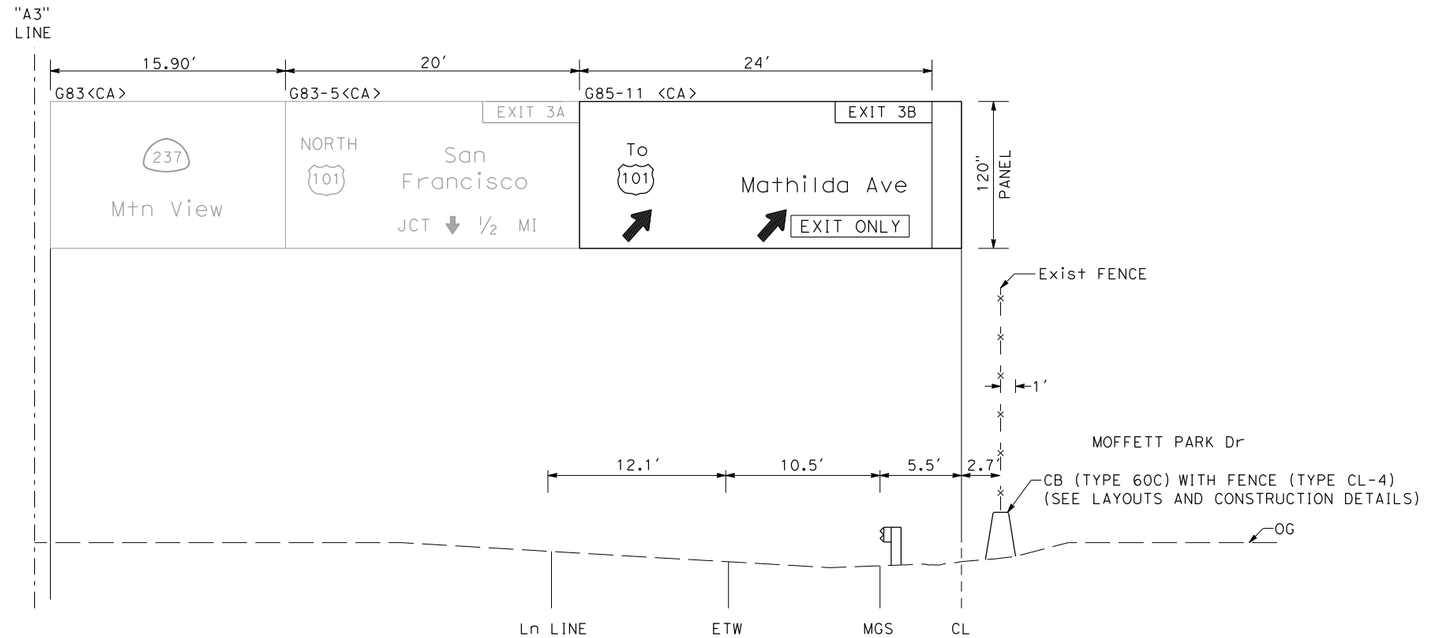

OS9-2

INSTALL SIGN PANEL ON EXISTING FRAME
"A3" 221+83 (FWBT)

SIGN DETAILS

NO SCALE

SD-5

REVISED BY	SCV		
DATE REVISED	05/03/18		
DESIGNED - CALCULATED BY	DIANNE A. GALVEZ		
CHECKED BY	STEVE LOUPE		
CONSULTANT FUNCTIONAL SUPERVISOR	TIMOTHY J. LEE		
STATE OF CALIFORNIA - DEPARTMENT OF TRANSPORTATION	Caltrans		

LAST REVISION 01-15-18 | DATE PLOTTED => 6/20/2018 | TIME PLOTTED => 11:20:16 AM

X:\237_101_Mathilda\000_CAD\Sheets\OA-Signs\OB-Details\0413000204ob005.dgn

BORDER LAST REVISED 7/2/2010 | USERNAME => Eilif | DGN FILE => 0413000204ob005.dgn | RELATIVE BORDER SCALE IS IN INCHES 0 1 2 3 | UNIT 0000 | PROJECT NUMBER & PHASE 0413000204

Dist	COUNTY	ROUTE	POST MILES TOTAL PROJECT	SHEET No.	TOTAL SHEETS
04	SCL	101,237	45.2/45.8, 2.7/3.3	307	736

REGISTERED CIVIL ENGINEER — 6-13-18 DATE

6-20-18
PLANS APPROVAL DATE

REGISTERED PROFESSIONAL ENGINEER — STEVE LOUPE — No. 63575 — Exp. 9/30/18 — CIVIL — STATE OF CALIFORNIA

THE STATE OF CALIFORNIA OR ITS OFFICERS OR AGENTS SHALL NOT BE RESPONSIBLE FOR THE ACCURACY OR COMPLETENESS OF SCANNED COPIES OF THIS PLAN SHEET.

WMH CORPORATION
50 W San Fernando St
Suite 950
San Jose, CA 95113

VTA
3331 N First St
Building B
San Jose, Ca 95134

R14-1 Mod

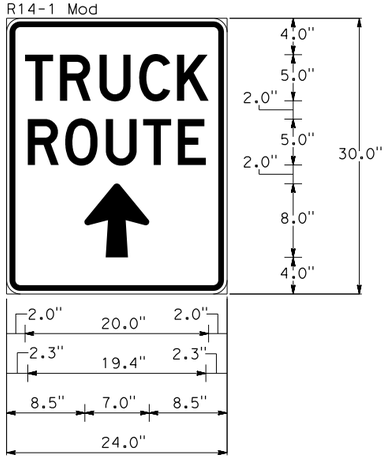

1.5" RADIUS, 0.6" BORDER, 0.3" INDENT, BLACK ON WHITE;
"TRUCK" D SPECIFIED LENGTH;
"ROUTE" D SPECIFIED LENGTH;
ARROW 5CAP-1L - 8.1" 90°;

S1-2

Spec 1C

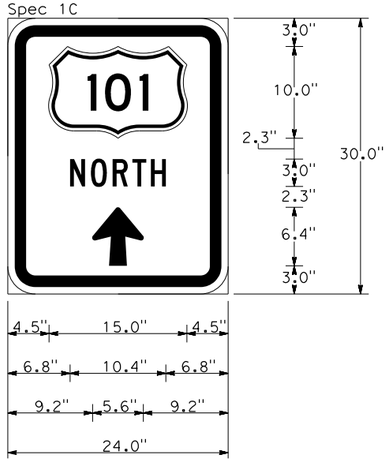

3.0" RADIUS, 1.3" BORDER, 0.8" INDENT, BLACK ON WHITE;
"NORTH" C;
ARROW 4UC&CAP-1L - 6.4" 90°

S1-24

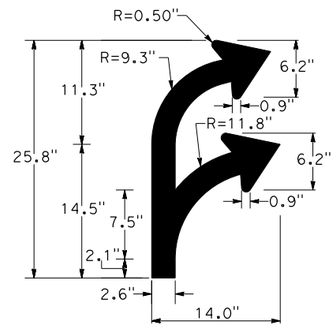

DETAIL A

G8-7 <CA>

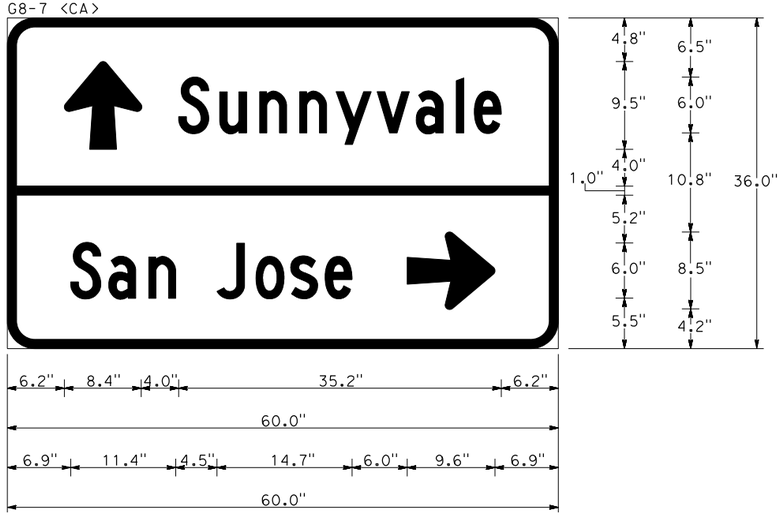

3.0" RADIUS, 1.0" BORDER, WHITE ON GREEN;
ARROW 6UC-1L - 9.6" 90°; "Sunnyvale" C 75% SPACING;
"San Jose" C 75% SPACING; ARROW 6UC-1L - 9.6" 0°;

S1-20

Spec 1D

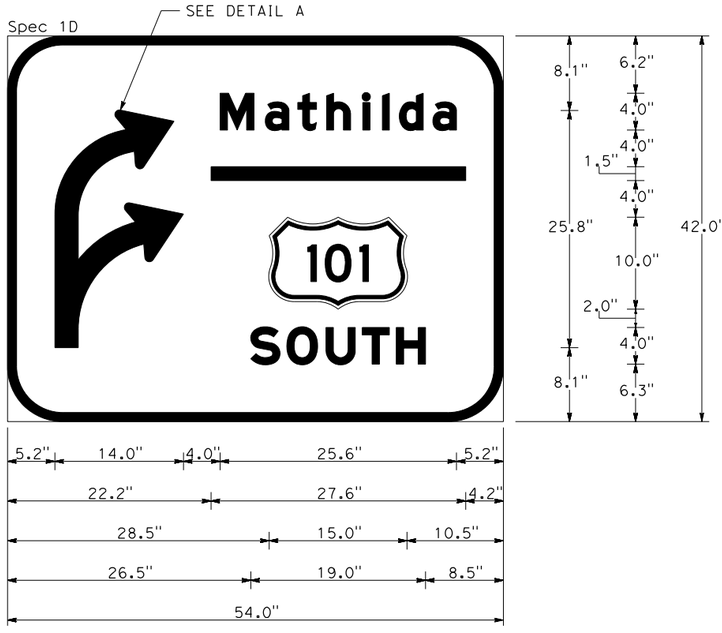

6.0" RADIUS, 1.0" BORDER, WHITE ON GREEN;
"Mathilda" E Mod 90% SPACING; "SOUTH" E Mod 90% SPACING;

S1-27

SIGN DETAILS

NO SCALE

SD-6

CALCULATED-DESIGNED BY	DIANNE A. GALVEZ	REVISED BY	SCV
CHECKED BY	STEVE LOUPE	DATE REVISED	05/03/18

CONSULTANT FUNCTIONAL SUPERVISOR: TIMOTHY J. LEE

STATE OF CALIFORNIA - DEPARTMENT OF TRANSPORTATION

Caltrans

X:\237_101_Mathilda\000_CAD\Sheets\OA-Signs\OB-Details\0413000204ob006.dgn

LAST REVISION 01-15-18 | DATE PLOTTED => 6/20/2018 | TIME PLOTTED => 11:20:19 AM

BORDER LAST REVISED 7/2/2010 | USERNAME => Eilif | DGN FILE => 0413000204ob006.dgn | RELATIVE BORDER SCALE IS IN INCHES 0 1 2 3 | UNIT 0000 | PROJECT NUMBER & PHASE 0413000204

Dist	COUNTY	ROUTE	POST MILES TOTAL PROJECT	SHEET No.	TOTAL SHEETS
04	SCL	101,237	45.2/45.8, 2.7/3.3	308	736

REGISTERED CIVIL ENGINEER — 6-13-18 DATE

6-20-18
PLANS APPROVAL DATE

STEVE LOUPE No. 63575 Exp. 9/30/18 CIVIL — REGISTERED PROFESSIONAL ENGINEER — STATE OF CALIFORNIA

THE STATE OF CALIFORNIA OR ITS OFFICERS OR AGENTS SHALL NOT BE RESPONSIBLE FOR THE ACCURACY OR COMPLETENESS OF SCANNED COPIES OF THIS PLAN SHEET.

WMH CORPORATION
50 W San Fernando St
Suite 950
San Jose, CA 95113

VTA
3331 N First St
Building B
San Jose, Ca 95134

R61-20.1 <CA> Mod

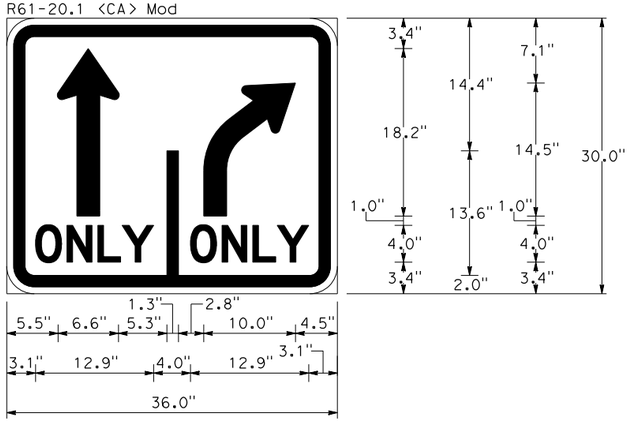

3.0" RADIUS, 1.3" BORDER, 0.8" INDENT, BLACK ON WHITE;
"ONLY" D 2K SPECIFIED LENGTH;
"ONLY" D 2K SPECIFIED LENGTH;

S1-36

Spec 1A

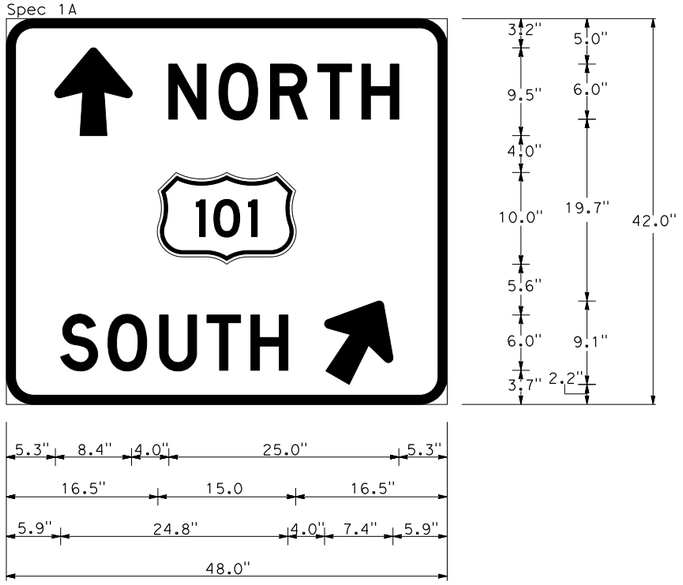

3.0" RADIUS, 1.0" BORDER, WHITE ON GREEN;
ARROW 6UC-1L - 9.6" 90°; "NORTH" D;
"SOUTH" D; ARROW 6UC-1L - 9.6" 60°;

S1-42

D1-1

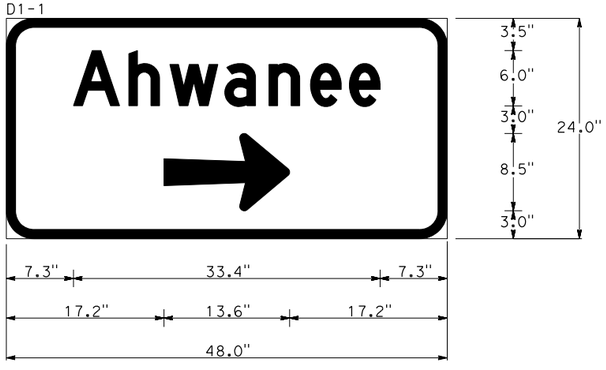

3.0" RADIUS, 1.0" BORDER, WHITE ON GREEN;
"Ahwanee" D 75% SPACING;
ARROW 6UC-2LV - 13.6" 0°;

S1-42

SIGN DETAILS

NO SCALE

SD-7

CALCULATED-DESIGNED BY	DIANNE A. GALVEZ	REVISED BY	SCV
CHECKED BY	STEVE LOUPE	DATE REVISED	05/03/18
SUPERVISOR	TIMOTHY J. LEE	CONSULTANT FUNCTIONAL SUPERVISOR	

STATE OF CALIFORNIA - DEPARTMENT OF TRANSPORTATION

X:\237_101_Mathilda\000_CAD\Sheets\OA-Signs\OB-Details\0413000204ob007.dgn

LAST REVISION 01-15-18 DATE PLOTTED => 6/20/2018 TIME PLOTTED => 11:20:22 AM

Dist	COUNTY	ROUTE	POST MILES TOTAL PROJECT	SHEET No.	TOTAL SHEETS
04	SCL	101,237	45.2/45.8, 2.7/3.3	309	736

REGISTERED CIVIL ENGINEER 6-13-18 DATE

6-20-18
PLANS APPROVAL DATE

REGISTERED PROFESSIONAL ENGINEER STEVE LOUPE No. 63575 Exp. 9/30/18 CIVIL STATE OF CALIFORNIA

THE STATE OF CALIFORNIA OR ITS OFFICERS OR AGENTS SHALL NOT BE RESPONSIBLE FOR THE ACCURACY OR COMPLETENESS OF SCANNED COPIES OF THIS PLAN SHEET.

WMH CORPORATION
50 W San Fernando St
Suite 950
San Jose, CA 95113

VTA
3331 N First St
Building B
San Jose, Ca 95134

G8-1 <CA>

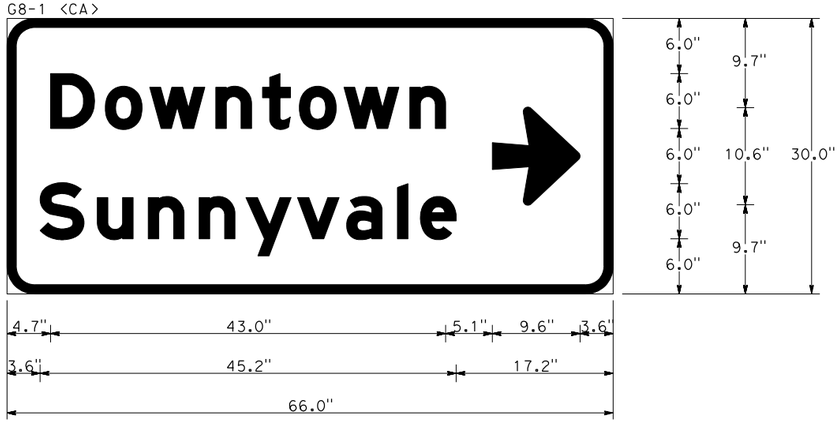

3.0" RADIUS, 1.0" BORDER, WHITE ON GREEN;
"Downtown" E Mod 75% SPACING; "Sunnyvale" E Mod 75% SPACING;
ARROW 6UC-2LH - 9.6" 0°;

S1-50

G78-1 <CA>

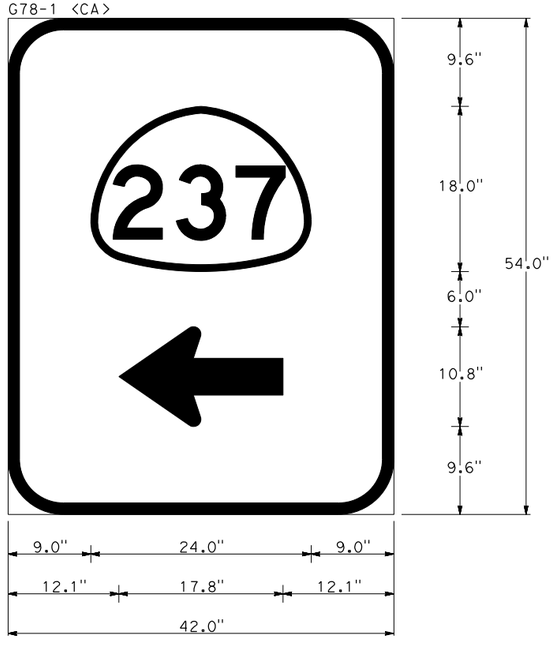

6.0" RADIUS, 1.3" BORDER, WHITE ON GREEN;
STANDARD ARROW CUSTOM 17.8" x 10.8" 180°;

S1-50

Spec 1E

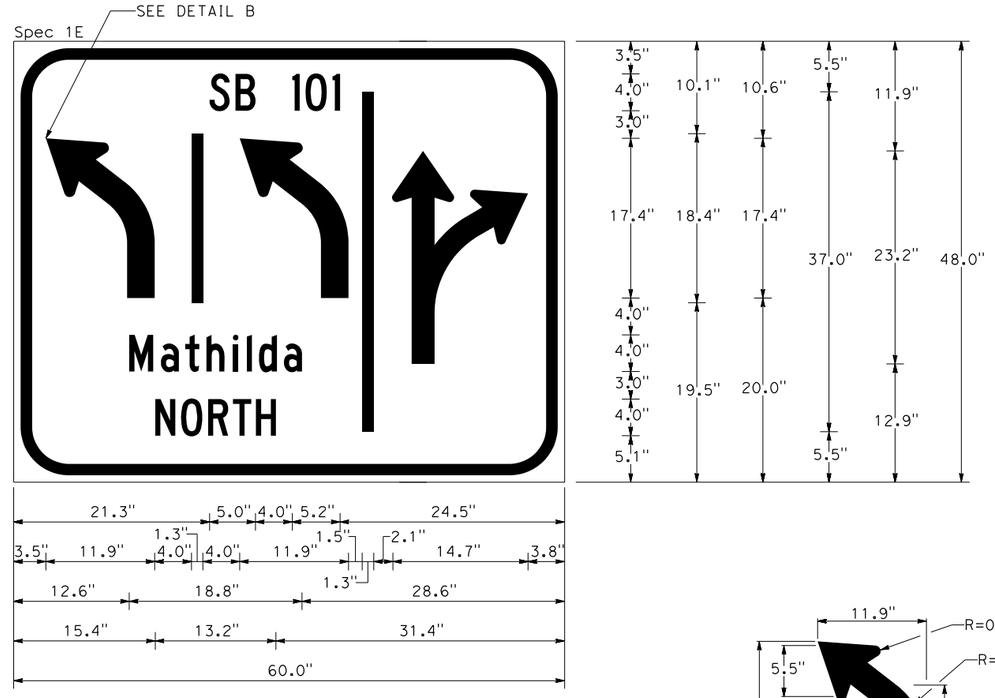

6.0" RADIUS, 1.3" BORDER, 0.8" INDENT, BLACK ON WHITE;
"SB 101" C 75% SPACING;
"Mathilda" C 75% SPACING;
"NORTH" C 75% SPACING;
R3-8a RIGHT DOUBLE HEADED ARROW ir=11, s=2.5;

S1-51 S1-53

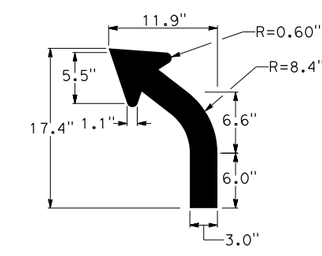

DETAIL B

SIGN DETAILS

NO SCALE

SD-8

STATE OF CALIFORNIA - DEPARTMENT OF TRANSPORTATION
Caltrans

CONSULTANT FUNCTIONAL SUPERVISOR: TIMOTHY J. LEE
CALCULATED-DESIGNED BY: DIANNE A. GALVEZ
CHECKED BY: STEVE LOUPE
REVISED BY: SCV
DATE REVISED: 05/03/18

X:\237_101_Mathilda\000_CAD\Sheets\0A-Signs\0B-Details\0413000204ob008.dgn

LAST REVISION 01-15-18
DATE PLOTTED => 6/20/2018
TIME PLOTTED => 11:20:26 AM

Dist	COUNTY	ROUTE	POST MILES TOTAL PROJECT	SHEET No.	TOTAL SHEETS
04	SCL	101,237	45.2/45.8, 2.7/3.3	310	736

REGISTERED CIVIL ENGINEER — DATE: 6-13-18

PLANS APPROVAL DATE: 6-20-18

STEVE LOUPE No. 63575 Exp. 9/30/18 CIVIL — REGISTERED PROFESSIONAL ENGINEER — STATE OF CALIFORNIA

THE STATE OF CALIFORNIA OR ITS OFFICERS OR AGENTS SHALL NOT BE RESPONSIBLE FOR THE ACCURACY OR COMPLETENESS OF SCANNED COPIES OF THIS PLAN SHEET.

WMH CORPORATION 50 W San Fernando St Suite 950 San Jose, CA 95113	VTA 3331 N First St Building B San Jose, Ca 95134

G8-4 <CA>

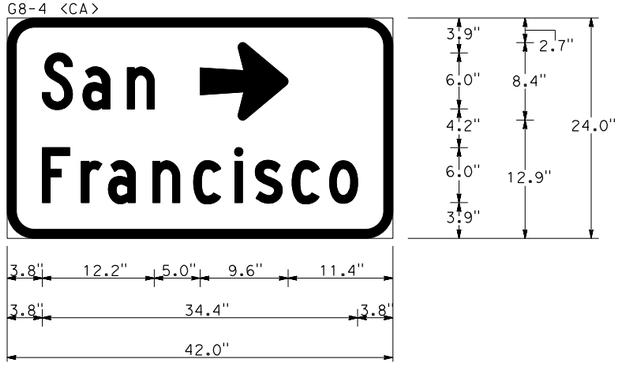

3.0" RADIUS, 1.0" BORDER, WHITE ON GREEN;
"San" C; ARROW 6UC-1L - 9.6" 0"; "Francisco" C;

S2-4

Spec 2A

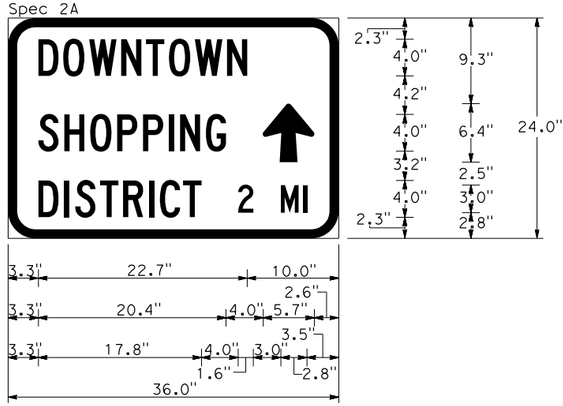

3.0" RADIUS, 1.0" BORDER, WHITE ON GREEN;
"DOWNTOWN" C 75% SPACING;
"SHOPPING" C 75% SPACING;
ARROW 4UC&CAP-1L - 6.4" 90";
"DISTRICT 2 MI" C 75% SPACING;

S2-26

G8-4 <CA>

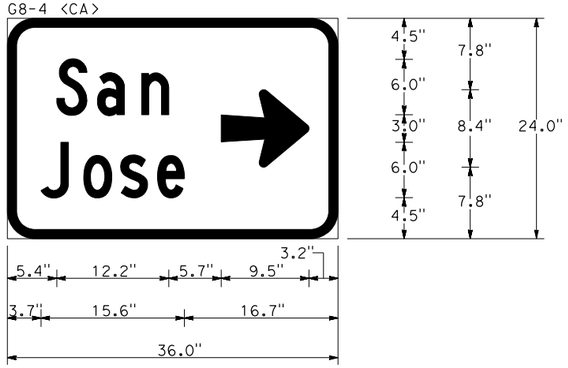

3.0" RADIUS, 1.0" BORDER, WHITE ON GREEN;
"San" C; "Jose" C;
Arrow 6UC-1L - 9.6" 0";

S2-30

Spec 2B

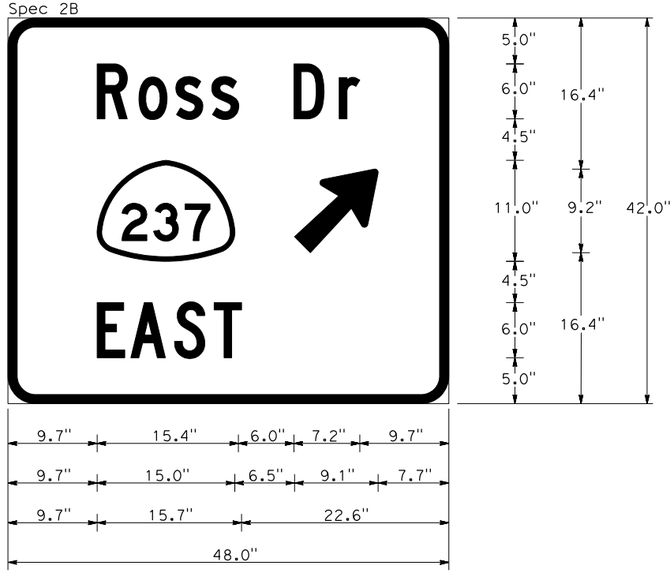

3.0" RADIUS, 1.0" BORDER, WHITE ON GREEN;
"Ross Dr" C; "EAST" C; ARROW 5CAP-2LV - 11.5" 45";

S2-37

SIGN DETAILS

NO SCALE

SD-9

CALCULATED-DESIGNED BY	DIANNE A. GALVEZ	REVISED BY	SCV
CHECKED BY	STEVE LOUPE	DATE REVISED	05/03/18
CONSULTANT FUNCTIONAL SUPERVISOR	TIMOTHY J. LEE		
STATE OF CALIFORNIA - DEPARTMENT OF TRANSPORTATION	Caltrans		

LAST REVISION 01-15-18 — DATE PLOTTED => 6/20/2018 — TIME PLOTTED => 11:20:29 AM

X:\237_101_Mathilda\000_CAD\Sheets\0A-Signs\0B-Details\0413000204ab009.dgn

BORDER LAST REVISED 7/2/2010 | USERNAME => Eilif | DGN FILE => 0413000204ab009.dgn | RELATIVE BORDER SCALE IS IN INCHES 0 1 2 3 | UNIT 0000 | PROJECT NUMBER & PHASE 0413000204

Dist	COUNTY	ROUTE	POST MILES TOTAL PROJECT	SHEET No.	TOTAL SHEETS
04	SCL	101,237	45.2/45.8, 2.7/3.3	311	736

REGISTERED CIVIL ENGINEER — 6-13-18 DATE

6-20-18
PLANS APPROVAL DATE

STEVE LOUPE No. 63575 Exp. 9/30/18 CIVIL — REGISTERED PROFESSIONAL ENGINEER — STATE OF CALIFORNIA

THE STATE OF CALIFORNIA OR ITS OFFICERS OR AGENTS SHALL NOT BE RESPONSIBLE FOR THE ACCURACY OR COMPLETENESS OF SCANNED COPIES OF THIS PLAN SHEET.

WMH CORPORATION
50 W San Fernando St
Suite 950
San Jose, CA 95113

VTA
3331 N First St
Building B
San Jose, Ca 95134

G77-4 <CA>

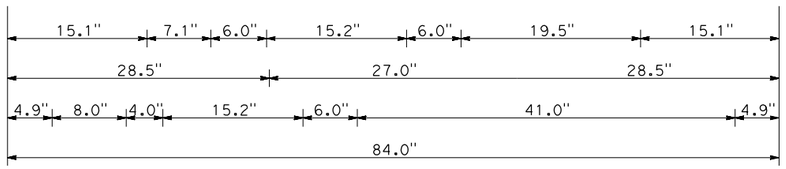

6.0" RADIUS, 1.3" BORDER, WHITE ON GREEN;
ARROW 5CAP-1L - 8.1" 90°; "San Jose" E Mod 75% SPACING; ARROW 5CAP-1L - 8.1" 180°
"San Francisco" E Mod 75% SPACING;

S2-38

G8-1 <CA>

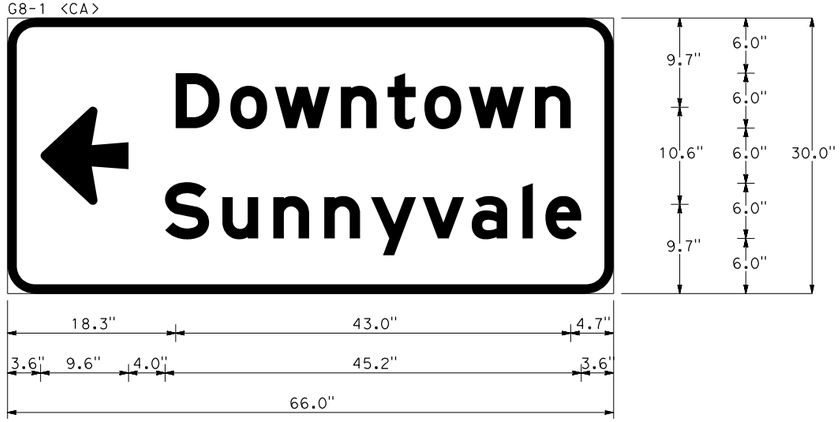

3.0" RADIUS, 1.0" BORDER, WHITE ON GREEN;
ARROW 6UC-2LH - 9.6" 180°; "Downtown" E Mod 75% SPACING;
"Sunnyvale" E Mod 75% SPACING;

S3-31

D1-1

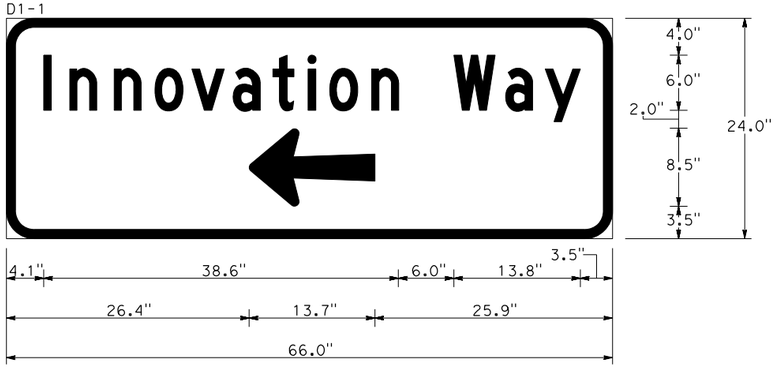

3.0" RADIUS, 1.0" BORDER, WHITE ON GREEN;
"Innovation Way" C; ARROW 6UC-2LV - 13.7" 180°;

S3-39

SIGN DETAILS

NO SCALE

SD-10

CALCULATED-DESIGNED BY	CHECKED BY	REVISED BY	DATE REVISED
DIANNE A. GALVEZ	STEVE LOUPE	SCV	05/03/18

TIMOTHY J. LEE
CONSULTANT FUNCTIONAL SUPERVISOR

STATE OF CALIFORNIA - DEPARTMENT OF TRANSPORTATION
Caltrans

X:\237_101_Mathilda\000_CAD\Sheets\OA-Signs\OB-Details\0413000204ob010.dgn

LAST REVISION 01-15-18
DATE PLOTTED => 6/20/2018
TIME PLOTTED => 11:20:32 AM

BORDER LAST REVISED 7/2/2010 | USERNAME => Eilif | DGN FILE => 0413000204ob010.dgn | RELATIVE BORDER SCALE IS IN INCHES 0 1 2 3 | UNIT 0000 | PROJECT NUMBER & PHASE 0413000204

Dist	COUNTY	ROUTE	POST MILES TOTAL PROJECT	SHEET No.	TOTAL SHEETS
04	SCL	101,237	45.2/45.8, 2.7/3.3	312	736

REGISTERED CIVIL ENGINEER 6-13-18 DATE

6-20-18
PLANS APPROVAL DATE

REGISTERED PROFESSIONAL ENGINEER STEVE LOUPE No. 63575 Exp. 9/30/18 CIVIL STATE OF CALIFORNIA

THE STATE OF CALIFORNIA OR ITS OFFICERS OR AGENTS SHALL NOT BE RESPONSIBLE FOR THE ACCURACY OR COMPLETENESS OF SCANNED COPIES OF THIS PLAN SHEET.

WMH CORPORATION
50 W San Fernando St
Suite 950
San Jose, CA 95113

VTA
3331 N First St
Building B
San Jose, Ca 95134

G77-4 <CA>

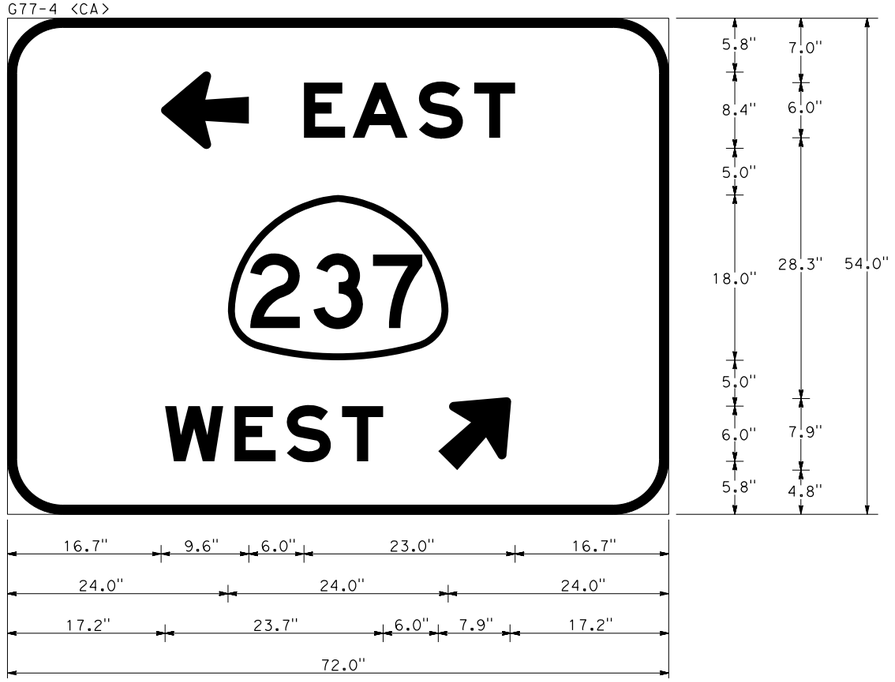

6.0" RADIUS, 1.0" BORDER, WHITE ON GREEN;
ARROW 6UC-1L - 9.6" 180°; "EAST" E Mod; "WEST" E Mod; ARROW 6UC-1L - 9.6" 45°;

S3-49

G8-13 <CA>

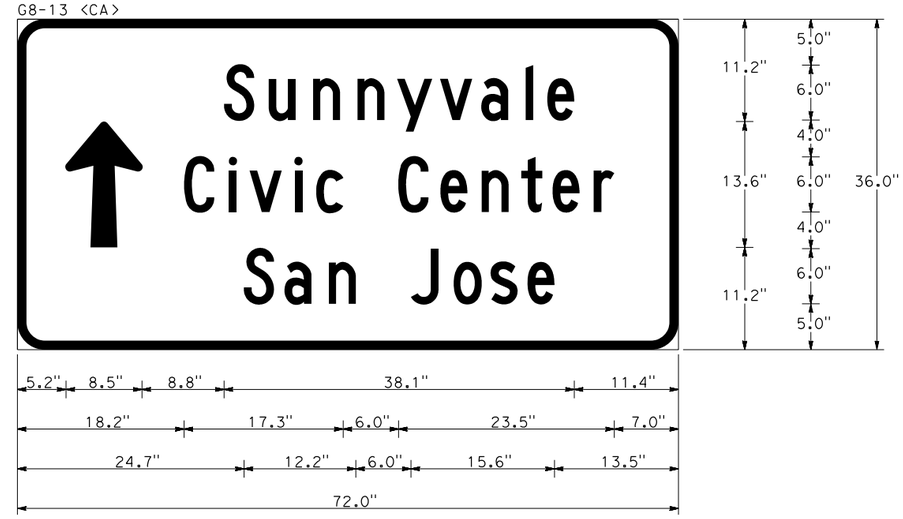

3.0" RADIUS, 1.0" BORDER, WHITE ON GREEN;
ARROW 6UC-2LV - 13.6" 90°; "Sunnyvale" C; "Civic Center" C; "San Jose" C;

S3-65

M5-3 Mod

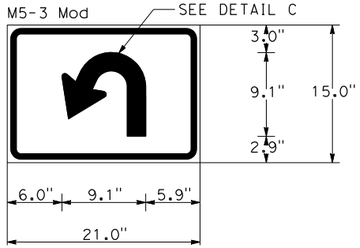

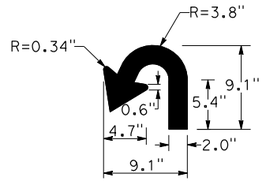

DETAIL C

1.5" RADIUS, 0.6" BORDER, 0.4" INDENT; BLACK ON WHITE;

S3-112 S3-114

R61-15 <CA> Mod

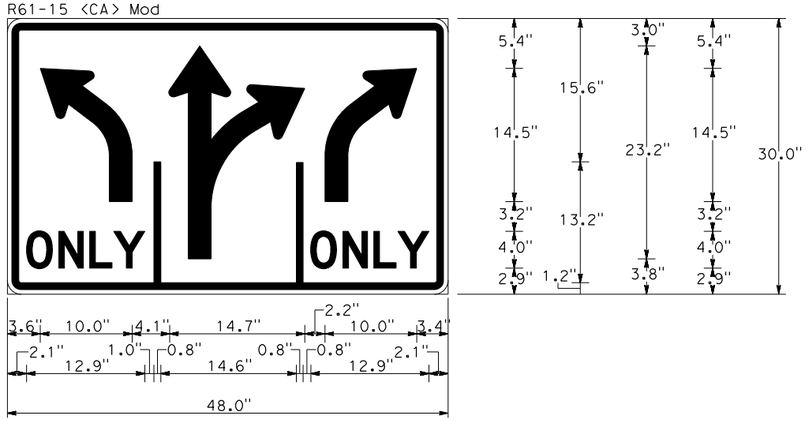

1.5" RADIUS, 0.8" BORDER, 0.5" INDENT, BLACK ON WHITE;
R3-8a RIGHT DOUBLE HEADED ARROW ir=11, s=2.5;

S4-11

SIGN DETAILS
NO SCALE
SD-11

STATE OF CALIFORNIA - DEPARTMENT OF TRANSPORTATION
Caltrans

CONSULTANT FUNCTIONAL SUPERVISOR: TIMOTHY J. LEE
CALCULATED-DESIGNED BY: DIANNE A. GALVEZ
CHECKED BY: STEVE LOUPE
REVISED BY: SCV
DATE REVISED: 05/03/18

X:\237_101_Mathilda\000_CAD\Sheets\OA-Signs\OB-Details\0413000204ob011.dgn

LAST REVISION 01-15-18
DATE PLOTTED => 6/20/2018
TIME PLOTTED => 11:20:38 AM

Spec 3B

6.0" RADIUS, 1.0" BORDER, WHITE ON GREEN;
"Mathilda" E Mod; "EAST" E Mod;

(S3-67)

Spec 3A/Spec 8B

SEE DETAIL D FOR DIMENSIONS
(LEFT TURN DOUBLE ARROW)

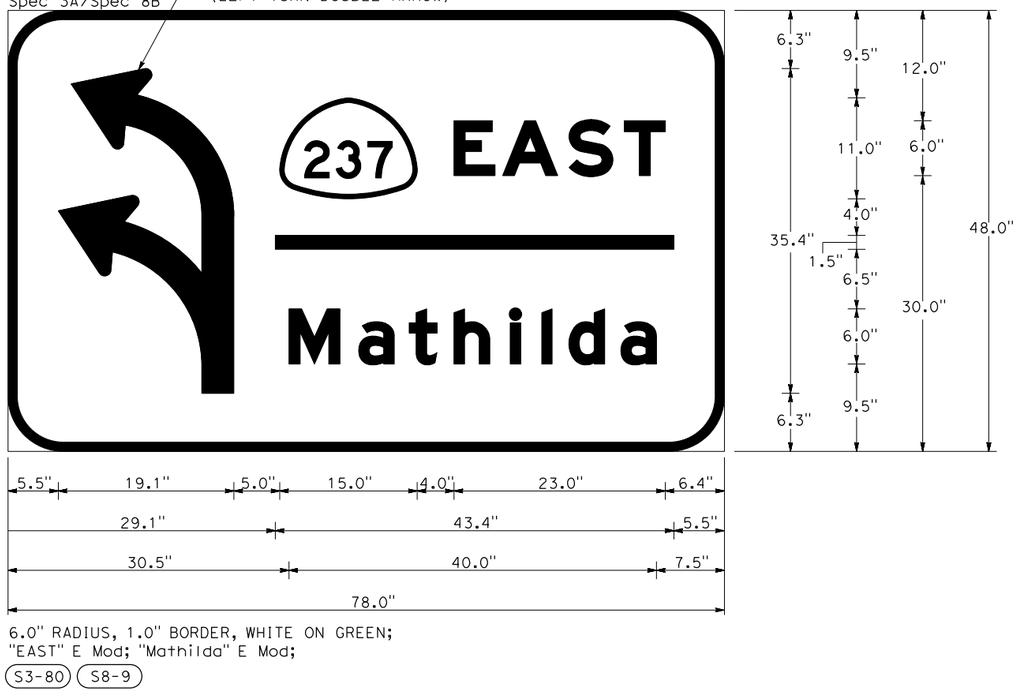

6.0" RADIUS, 1.0" BORDER, WHITE ON GREEN;
"EAST" E Mod; "Mathilda" E Mod;

(S3-80) (S8-9)

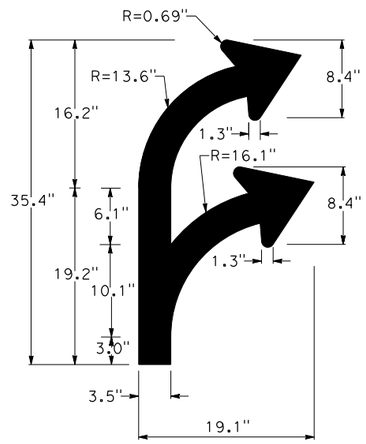

DETAIL D

G78-1 <CA>

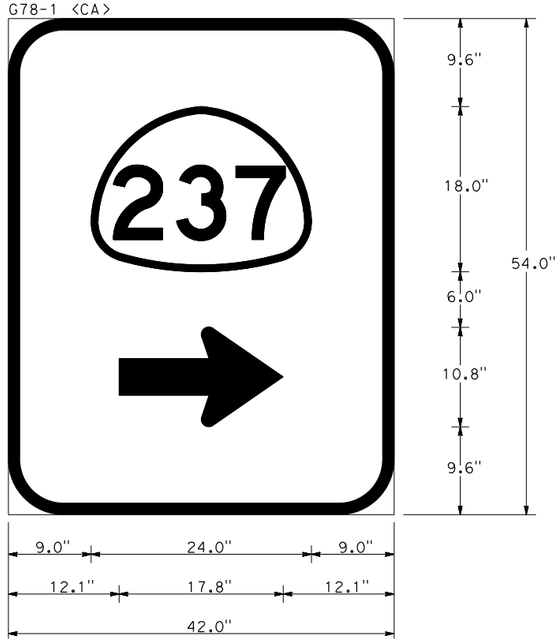

6.0" RADIUS, 1.3" BORDER, WHITE ON GREEN;
STANDARD ARROW CUSTOM 17.8" x 10.8" 0";

(S6-11)

Dist	COUNTY	ROUTE	POST MILES TOTAL PROJECT	SHEET No.	TOTAL SHEETS
04	SCL	101,237	45.2/45.8, 2.7/3.3	313	736

REGISTERED CIVIL ENGINEER — 6-13-18 DATE

6-20-18
PLANS APPROVAL DATE

REGISTERED PROFESSIONAL ENGINEER — STEVE LOUPE — No. 63575 — Exp. 9/30/18 — CIVIL — STATE OF CALIFORNIA

THE STATE OF CALIFORNIA OR ITS OFFICERS OR AGENTS SHALL NOT BE RESPONSIBLE FOR THE ACCURACY OR COMPLETENESS OF SCANNED COPIES OF THIS PLAN SHEET.

WMH CORPORATION 50 W San Fernando St Suite 950 San Jose, CA 95113	VTA 3331 N First St Building B San Jose, Ca 95134

SIGN DETAILS

NO SCALE

SD-12

	REVISED BY	DATE REVISED
	SCV	05/03/18

CALCULATED-DESIGNED BY: DIANNE A. GALVEZ
CHECKED BY: STEVE LOUPE
CONSULTANT FUNCTIONAL SUPERVISOR: TIMOTHY J. LEE

STATE OF CALIFORNIA - DEPARTMENT OF TRANSPORTATION
Caltrans

X:\237_101_Mathilda\000_CAD\Sheets\0A-Signs\0B-Details\0413000204ob012.dgn

LAST REVISION 01-15-18 | DATE PLOTTED => 6/20/2018 | TIME PLOTTED => 11:20:43 AM

BORDER LAST REVISED 7/2/2010 | USERNAME => Eilif | DGN FILE => 0413000204ob012.dgn | RELATIVE BORDER SCALE IS IN INCHES 0 1 2 3 | UNIT 0000 | PROJECT NUMBER & PHASE 0413000204

Dist	COUNTY	ROUTE	POST MILES TOTAL PROJECT	SHEET No.	TOTAL SHEETS
04	SCL	101,237	45.2/45.8, 2.7/3.3	314	736

REGISTERED CIVIL ENGINEER — 6-13-18 DATE

6-20-18
PLANS APPROVAL DATE

STEVE LOUPE No. 63575 Exp. 9/30/18 CIVIL — REGISTERED PROFESSIONAL ENGINEER — STATE OF CALIFORNIA

THE STATE OF CALIFORNIA OR ITS OFFICERS OR AGENTS SHALL NOT BE RESPONSIBLE FOR THE ACCURACY OR COMPLETENESS OF SCANNED COPIES OF THIS PLAN SHEET.

WMH CORPORATION
50 W San Fernando St
Suite 950
San Jose, CA 95113

VTA
3331 N First St
Building B
San Jose, Ca 95134

G8-1 <CA>

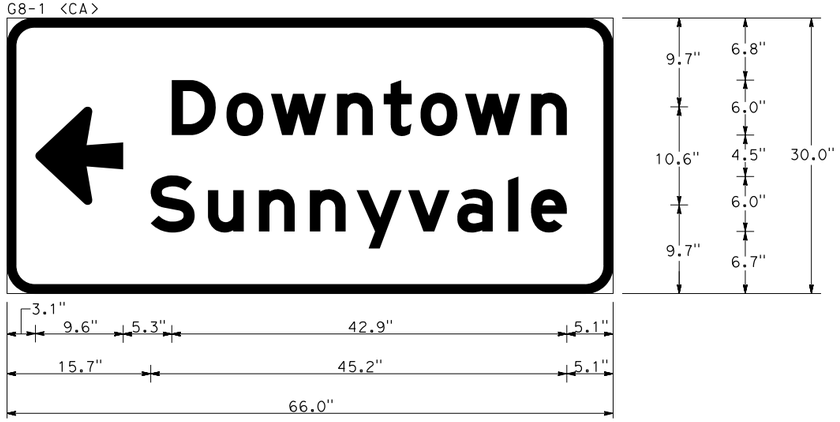

3.0" RADIUS, 1.0" BORDER, WHITE ON GREEN;
ARROW 6UC-2LH - 9.6" 180°; "Downtown" E Mod 75% SPACING;
"Sunnyvale" E Mod 75% SPACING;

S6-12

G78-1 <CA>

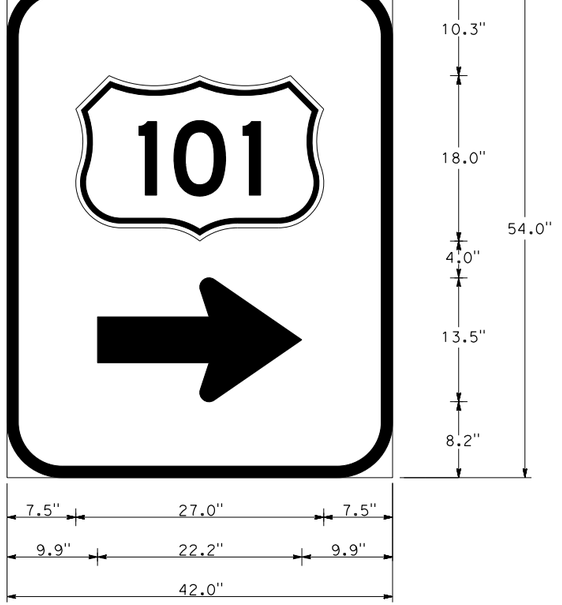

6.0" RADIUS, 1.3" BORDER, WHITE ON GREEN;
STANDARD ARROW CUSTOM 22.2" X 13.5" 0°;

S8-6

G86-5 <CA>

12.0" RADIUS, 2.0" BORDER, WHITE ON GREEN;
"Downtown" E Mod; "Sunnyvale" E Mod; "NEXT EXIT" E Mod;

S7-3

SIGN DETAILS

NO SCALE

SD-13

STATE OF CALIFORNIA - DEPARTMENT OF TRANSPORTATION	CONSULTANT FUNCTIONAL SUPERVISOR	CALCULATED-DESIGNED BY	CHECKED BY	REVISED BY	DATE REVISED
Caltrans	TIMOTHY J. LEE	DIANNE A. GALVEZ	STEVE LOUPE	SCV	05/03/18

LAST REVISION 01-15-18 | DATE PLOTTED => 6/20/2018 | TIME PLOTTED => 11:20:47 AM

X:\237_101_Mathilda\000_CAD\Sheets\0A-Signs\0B-Details\0413000204ob013.dgn

BORDER LAST REVISED 7/2/2010 | USERNAME => Eilif | DGN FILE => 0413000204ob013.dgn | RELATIVE BORDER SCALE IS IN INCHES 0 1 2 3 | UNIT 0000 | PROJECT NUMBER & PHASE 0413000204

Dist	COUNTY	ROUTE	POST MILES TOTAL PROJECT	SHEET No.	TOTAL SHEETS
04	SCL	101,237	45.2/45.8, 2.7/3.3	315	736

REGISTERED CIVIL ENGINEER 6-13-18 DATE

6-20-18
PLANS APPROVAL DATE

REGISTERED PROFESSIONAL ENGINEER STEVE LOUPE No. 63575 Exp. 9/30/18 CIVIL STATE OF CALIFORNIA

THE STATE OF CALIFORNIA OR ITS OFFICERS OR AGENTS SHALL NOT BE RESPONSIBLE FOR THE ACCURACY OR COMPLETENESS OF SCANNED COPIES OF THIS PLAN SHEET.

WMH CORPORATION
50 W San Fernando St
Suite 950
San Jose, CA 95113

VTA
3331 N First St
Building B
San Jose, Ca 95134

Spec 8A

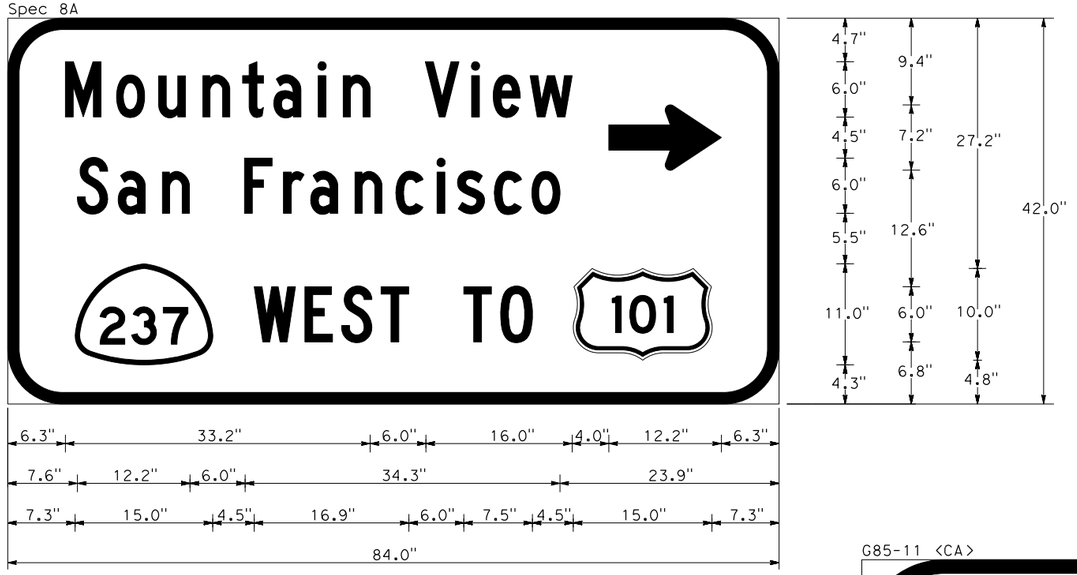

6.0" RADIUS, 1.3" BORDER, WHITE ON GREEN;
"Mountain View" C; "San Francisco" C; STANDARD ARROW CUSTOM 12.3" x 7.1" 0°;
"WEST TO" C;

S8-4

R10-10b

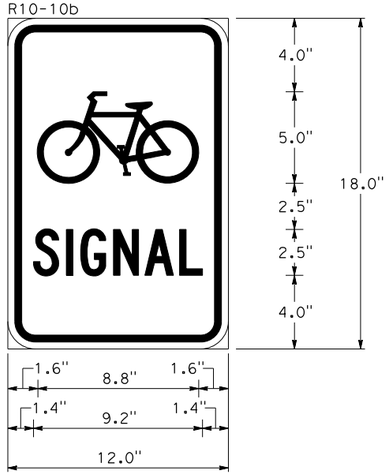

1.5" RADIUS, 0.4" BORDER, 0.4" INDENT, BLACK ON WHITE;
SYMBOL RG025
"SIGNAL" C 80% SPACING;

S8-15

G85-11 <CA>

3.0" RADIUS, 1.5" BORDER, WHITE ON GREEN;
"EXIT" E; "396" E; "A" E;
9.0" RADIUS, 1.5" BORDER, WHITE ON GREEN;
"Mathilda Ave" E Mod 90% SPACING; Arrow 10CAP-1L - 16.0" 45°; Arrow 10CAP-1L - 16.0" 45°;

S7-4

SIGN DETAILS
NO SCALE
SD-14

STATE OF CALIFORNIA - DEPARTMENT OF TRANSPORTATION
Caltrans
CONSULTANT FUNCTIONAL SUPERVISOR: TIMOTHY J. LEE
CALCULATED-DESIGNED BY: DIANNE A. GALVEZ
CHECKED BY: STEVE LOUPE
REVISED BY: SCV
DATE REVISED: 05/03/18

X:\237_101_Mathilda\000_CAD\Sheets\0A-Signs\0B-Details\0413000204ob014.dgn

LAST REVISION 01-15-18
DATE PLOTTED => 6/20/2018
TIME PLOTTED => 11:20:50 AM

Dist	COUNTY	ROUTE	POST MILES TOTAL PROJECT	SHEET No.	TOTAL SHEETS
04	SCL	101,237	45.2/45.8, 2.7/3.3	316	736

REGISTERED CIVIL ENGINEER — 6-13-18 DATE

6-20-18
PLANS APPROVAL DATE

STEVE LOUPE No. 63575 Exp. 9/30/18 CIVIL — REGISTERED PROFESSIONAL ENGINEER — STATE OF CALIFORNIA

THE STATE OF CALIFORNIA OR ITS OFFICERS OR AGENTS SHALL NOT BE RESPONSIBLE FOR THE ACCURACY OR COMPLETENESS OF SCANNED COPIES OF THIS PLAN SHEET.

WMH CORPORATION
50 W San Fernando St
Suite 950
San Jose, CA 95113

VTA
3331 N First St
Building B
San Jose, Ca 95134

R61-36 <CA> Mod

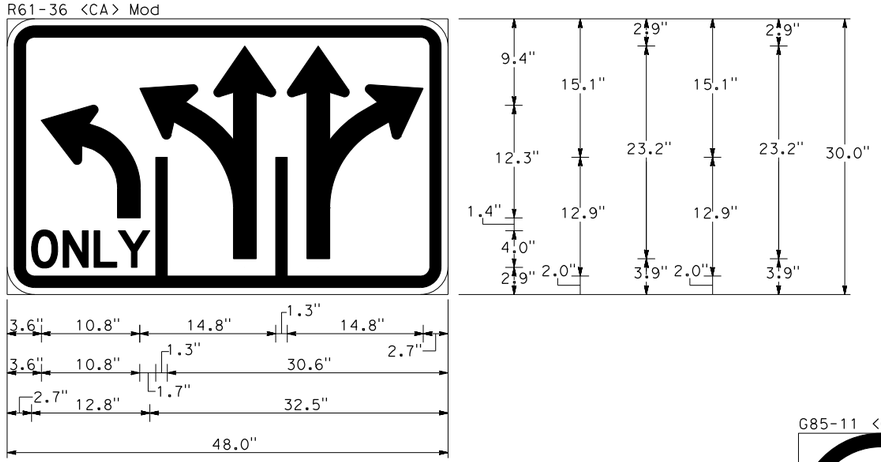

IDENTIFIER: R3-8a_48x30
3.0" RADIUS, 1.3" BORDER, 0.8" INDENT, BLACK ON WHITE;
R3-8a LEFT TURN ARROW ir=5.813, s=2.5;
"ONLY" D 2K SPECIFIED LENGTH;
R3-8a LEFT DOUBLE HEADED ARROW ir=11, s=2.5;
R3-8a RIGHT DOUBLE HEADED ARROW ir=11, s=2.5;

S9-10 S9-11

G85-11 <CA>

3.0" RADIUS, 1.5" BORDER, WHITE ON GREEN;
"EXIT" E; "3B" E;
9.0" RADIUS, 1.5" BORDER, WHITE ON GREEN;
"Mathilda Ave" E Mod 65% SPACING; Arrow 10CAP-1L - 16.0" 45°; Arrow 10CAP-1L - 16.0" 45°;
W61C <CA>; 72" x 12"
3.0" RADIUS, 0.0" BORDER, GOLD ON GOLD;
"EXIT ONLY" BLACK E;

S9-43

SIGN DETAILS

NO SCALE

SD-15

REVISED BY	DATE REVISED
SCV	05/03/18

CALCULATED-DESIGNED BY: DIANNE A. GALVEZ
CHECKED BY: STEVE LOUPE
CONSULTANT FUNCTIONAL SUPERVISOR: TIMOTHY J. LEE
STATE OF CALIFORNIA - DEPARTMENT OF TRANSPORTATION
Caltrans

LAST REVISION 01-15-18
DATE PLOTTED => 6/20/2018
TIME PLOTTED => 11:20:54 AM

X:\237_101_Mathilda\000_CAD\Sheets\04-Signs\08-Details\0413000204ob015.dgn

BORDER LAST REVISED 7/2/2010 | USERNAME => Eilif | DGN FILE => 0413000204ob015.dgn | RELATIVE BORDER SCALE IS IN INCHES 0 1 2 3 | UNIT 0000 | PROJECT NUMBER & PHASE 0413000204

Dist	COUNTY	ROUTE	POST MILES TOTAL PROJECT	SHEET No.	TOTAL SHEETS
04	SCL	101,237	45.2/45.8, 2.7/3.3	317	736

REGISTERED CIVIL ENGINEER — 6-13-18 DATE

6-20-18
PLANS APPROVAL DATE

REGISTERED PROFESSIONAL ENGINEER — STEVE LOUPE — No. 63575 — Exp. 9/30/18 — CIVIL — STATE OF CALIFORNIA

THE STATE OF CALIFORNIA OR ITS OFFICERS OR AGENTS SHALL NOT BE RESPONSIBLE FOR THE ACCURACY OR COMPLETENESS OF SCANNED COPIES OF THIS PLAN SHEET.

WMH CORPORATION 50 W San Fernando St Suite 950 San Jose, CA 95113	VTA 3331 N First St Building B San Jose, Ca 95134

G85-3 <CA> Mod

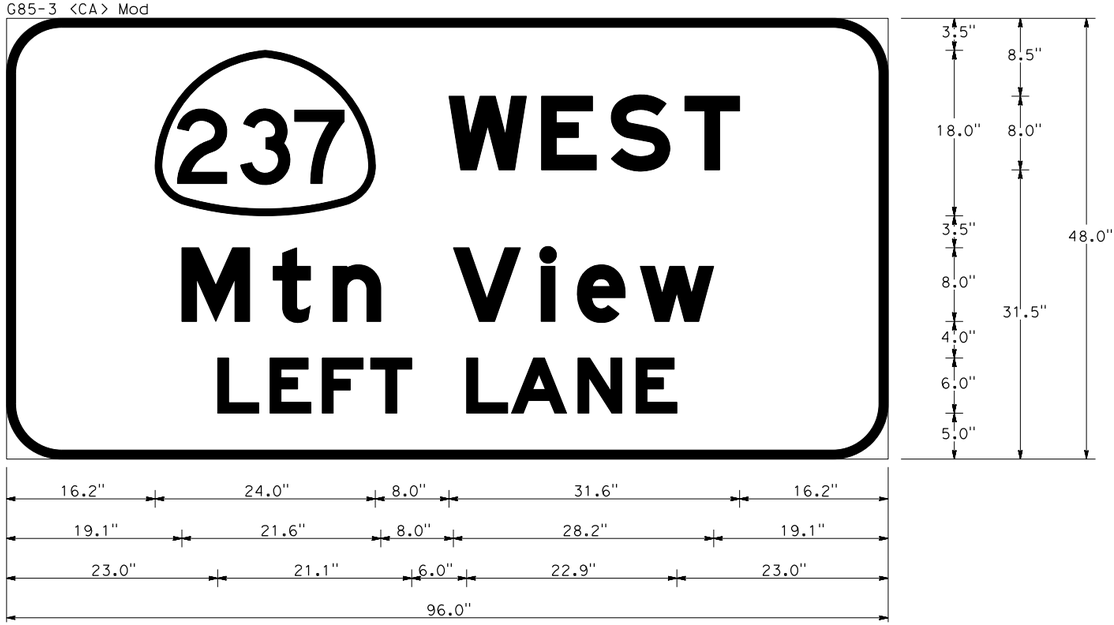

6.0" RADIUS, 1.0" BORDER, WHITE ON GREEN;
"WEST" E Mod; "Mtn View" E Mod; "LEFT LANE" E Mod;

G85-3 <CA> Mod

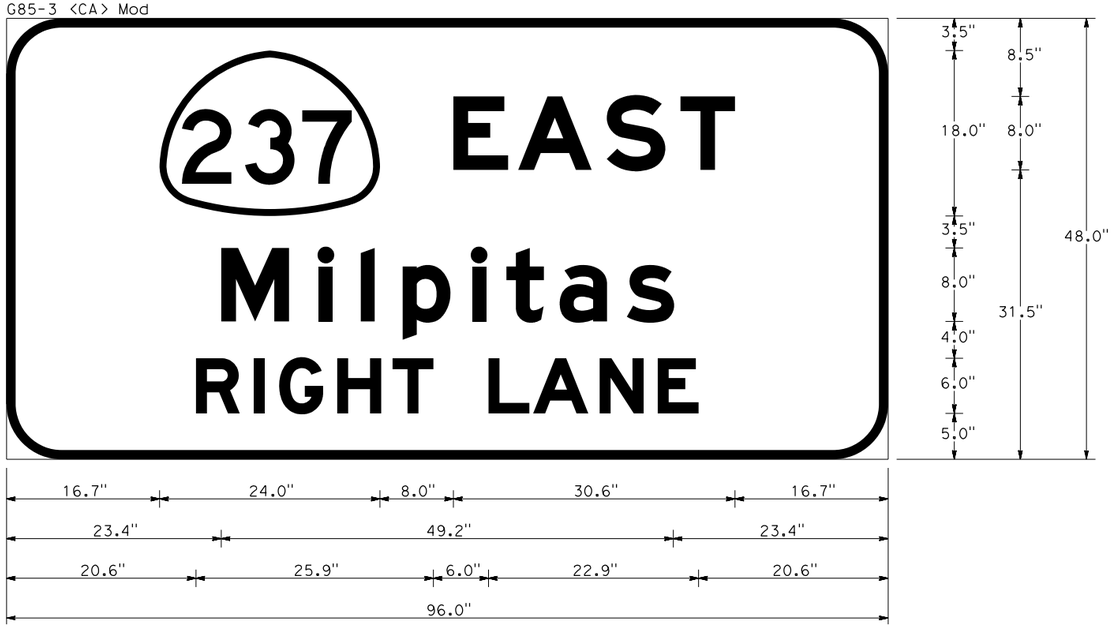

6.0" RADIUS, 1.0" BORDER, WHITE ON GREEN;
"EAST" E Mod; "Milpitas" E Mod; "RIGHT LANE" E Mod;

OS2-2

SIGN DETAILS

NO SCALE

SD-16

CALCULATED-DESIGNED BY	DIANNE A. GALVEZ	REVISED BY	SCV
CHECKED BY	STEVE LOUPE	DATE REVISED	05/03/18
CONSULTANT FUNCTIONAL SUPERVISOR	TIMOTHY J. LEE		
STATE OF CALIFORNIA - DEPARTMENT OF TRANSPORTATION	Caltrans		

LAST REVISION 01-15-18
DATE PLOTTED => 6/20/2018
TIME PLOTTED => 11:20:57 AM

X:\237_101_Mathilda\000_CAD\Sheets\OA-Signs\OB-Details\0413000204ob016.dgn

BORDER LAST REVISED 7/2/2010 | USERNAME => Eilif | DGN FILE => 0413000204ob016.dgn | RELATIVE BORDER SCALE IS IN INCHES 0 1 2 3 | UNIT 0000 | PROJECT NUMBER & PHASE 0413000204

Dist	COUNTY	ROUTE	POST MILES TOTAL PROJECT	SHEET No.	TOTAL SHEETS
04	SCL	101,237	45.2/45.8, 2.7/3.3	318	736

REGISTERED CIVIL ENGINEER 6-13-18 DATE

6-20-18
PLANS APPROVAL DATE

REGISTERED PROFESSIONAL ENGINEER STEVE LOUPE No. 63575 Exp. 9/30/18 CIVIL STATE OF CALIFORNIA

THE STATE OF CALIFORNIA OR ITS OFFICERS OR AGENTS SHALL NOT BE RESPONSIBLE FOR THE ACCURACY OR COMPLETENESS OF SCANNED COPIES OF THIS PLAN SHEET.

WMH CORPORATION
50 W San Fernando St
Suite 950
San Jose, CA 95113

VTA
3331 N First St
Building B
San Jose, Ca 95134

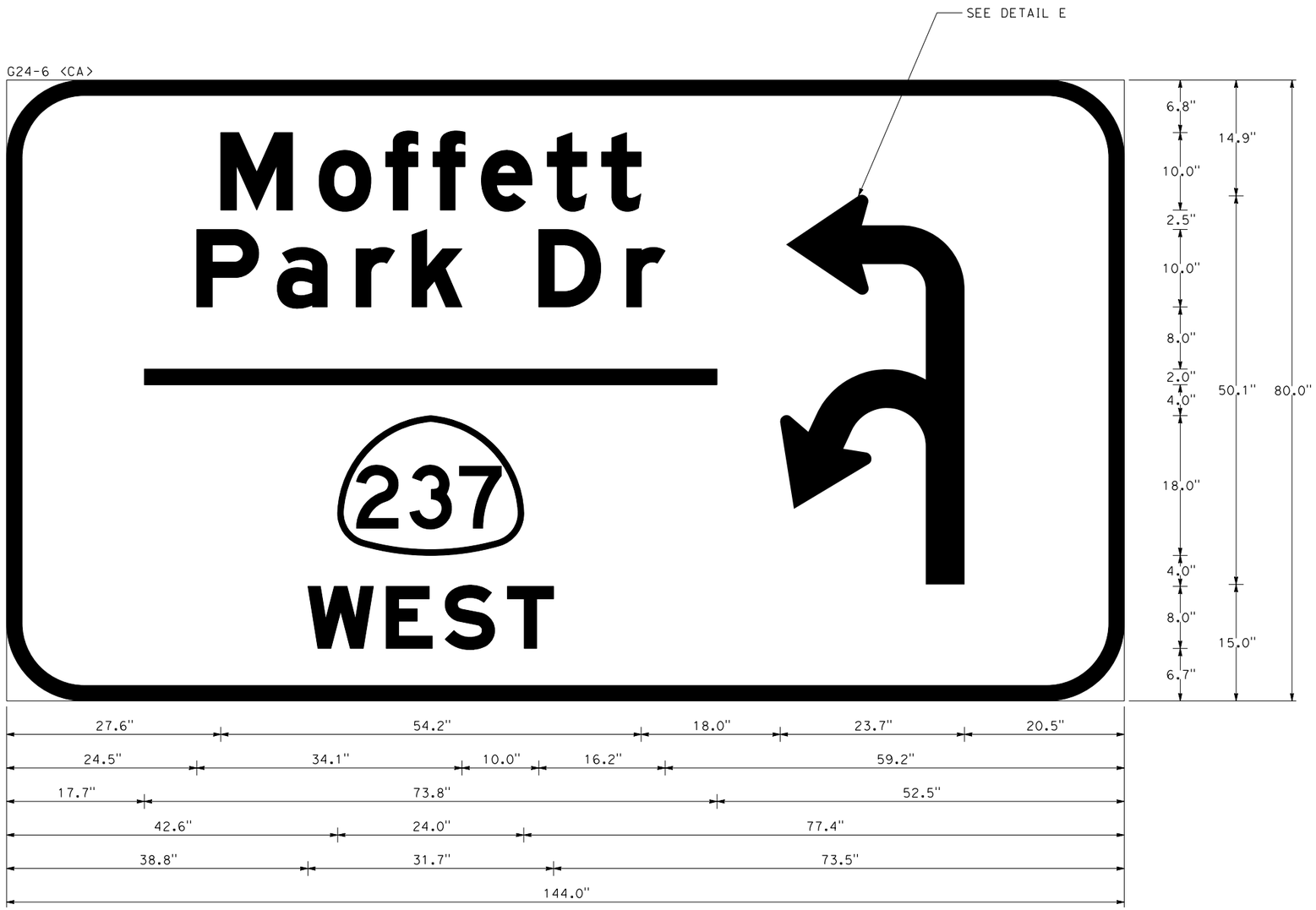

10.0" RADIUS, 2.0" BORDER, WHITE ON GREEN;
"Moffett" E Mod; "Park Dr" E Mod; "WEST" E Mod;

OS3-2

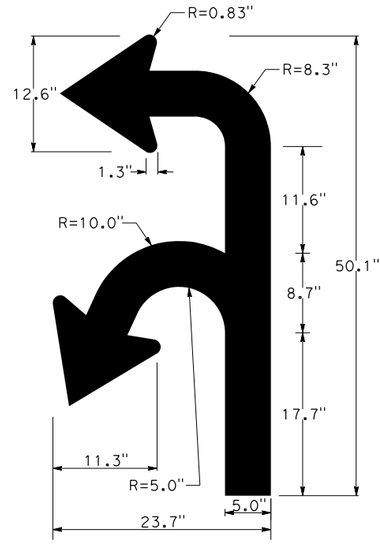

DETAIL E

SIGN DETAILS
NO SCALE
SD-17

STATE OF CALIFORNIA - DEPARTMENT OF TRANSPORTATION
Caltrans

CONSULTANT FUNCTIONAL SUPERVISOR: TIMOTHY J. LEE
CALCULATED-DESIGNED BY: DIANNE A. GALVEZ
CHECKED BY: STEVE LOUPE
REVISED BY: SCV
DATE REVISED: 05/03/18

X:\237_101_Mathilda\000_CAD\Sheets\OA-Signs\OB-Details\0413000204ob017.dgn

LAST REVISION 01-15-18
DATE PLOTTED => 6/20/2018
TIME PLOTTED => 11:21:00 AM

Dist	COUNTY	ROUTE	POST MILES TOTAL PROJECT	SHEET No.	TOTAL SHEETS
04	SCL	101,237	45.2/45.8, 2.7/3.3	319	736

REGISTERED CIVIL ENGINEER — 6-13-18 DATE

6-20-18
PLANS APPROVAL DATE

REGISTERED PROFESSIONAL ENGINEER — STEVE LOUPE — No. 63575 — Exp. 9/30/18 — CIVIL — STATE OF CALIFORNIA

THE STATE OF CALIFORNIA OR ITS OFFICERS OR AGENTS SHALL NOT BE RESPONSIBLE FOR THE ACCURACY OR COMPLETENESS OF SCANNED COPIES OF THIS PLAN SHEET.

WMH CORPORATION
50 W San Fernando St
Suite 950
San Jose, CA 95113

VTA
3331 N First St
Building B
San Jose, Ca 95134

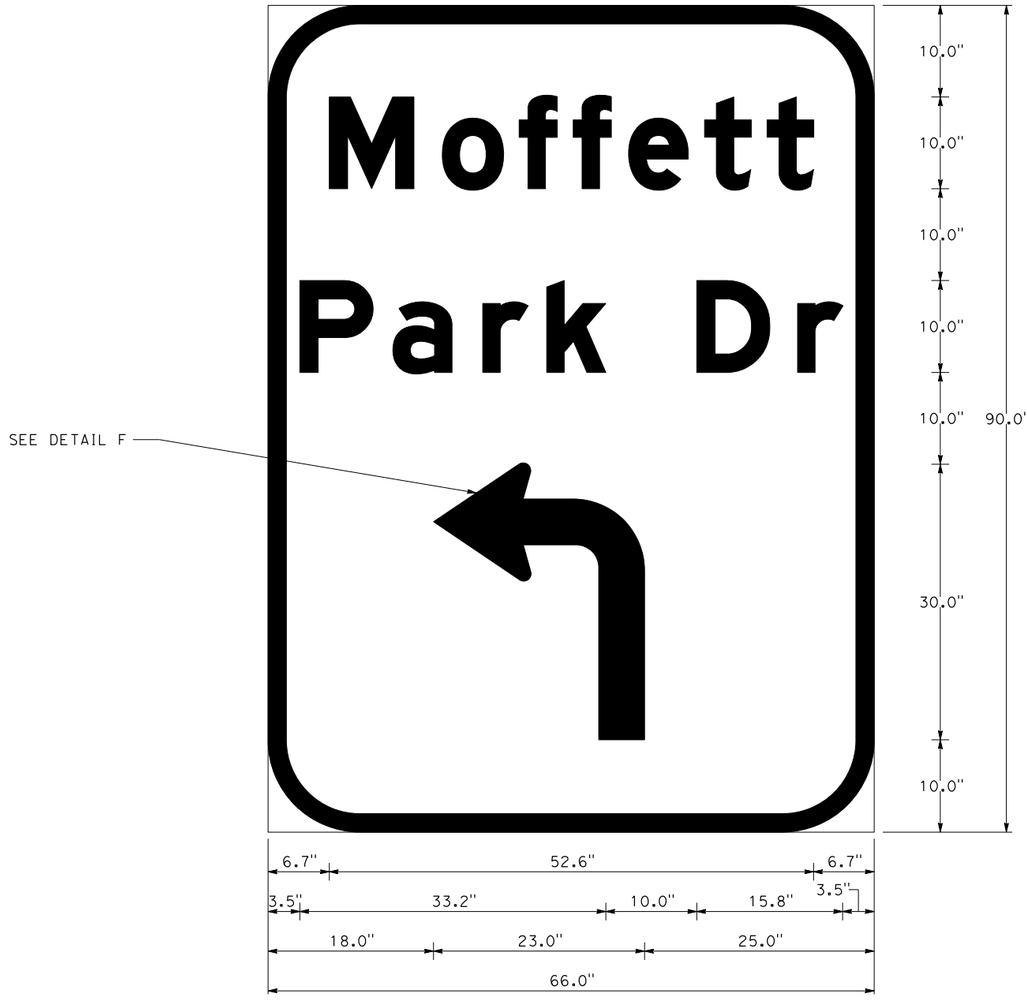

10.0" RADIUS, 2.0" BORDER, WHITE ON GREEN;
"Moffett" E Mod 90% SPACING; "Park Dr" E Mod 90% SPACING;

OS3-2

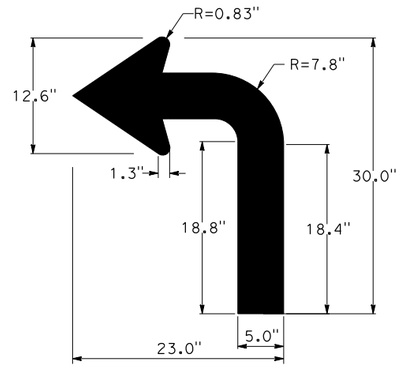

DETAIL F

SIGN DETAILS

NO SCALE

SD-18

CALCULATED-DESIGNED BY	CHECKED BY	REVISED BY	DATE REVISED
DIANNE A. GALVEZ	STEVE LOUPE	SCV	05/03/18

CONSULTANT FUNCTIONAL SUPERVISOR: TIMOTHY J. LEE

STATE OF CALIFORNIA - DEPARTMENT OF TRANSPORTATION

Caltrans

LAST REVISION 01-15-18 | DATE PLOTTED => 6/20/2018 | TIME PLOTTED => 11:21:04 AM

X:\237_101_Mathilda\000_CAD\Sheets\04-Signs\08-Details\0413000204ob018.dgn

Dist	COUNTY	ROUTE	POST MILES TOTAL PROJECT	SHEET No.	TOTAL SHEETS
04	SCL	101,237	45.2/45.8, 2.7/3.3	320	736

REGISTERED CIVIL ENGINEER — 6-13-18 DATE

6-20-18
PLANS APPROVAL DATE

REGISTERED PROFESSIONAL ENGINEER — STEVE LOUPE — No. 63575 — Exp. 9/30/18 — CIVIL — STATE OF CALIFORNIA

THE STATE OF CALIFORNIA OR ITS OFFICERS OR AGENTS SHALL NOT BE RESPONSIBLE FOR THE ACCURACY OR COMPLETENESS OF SCANNED COPIES OF THIS PLAN SHEET.

WMH CORPORATION 50 W San Fernando St Suite 950 San Jose, CA 95113	VTA 3331 N First St Building B San Jose, Ca 95134

G85-3 <CA> Mod

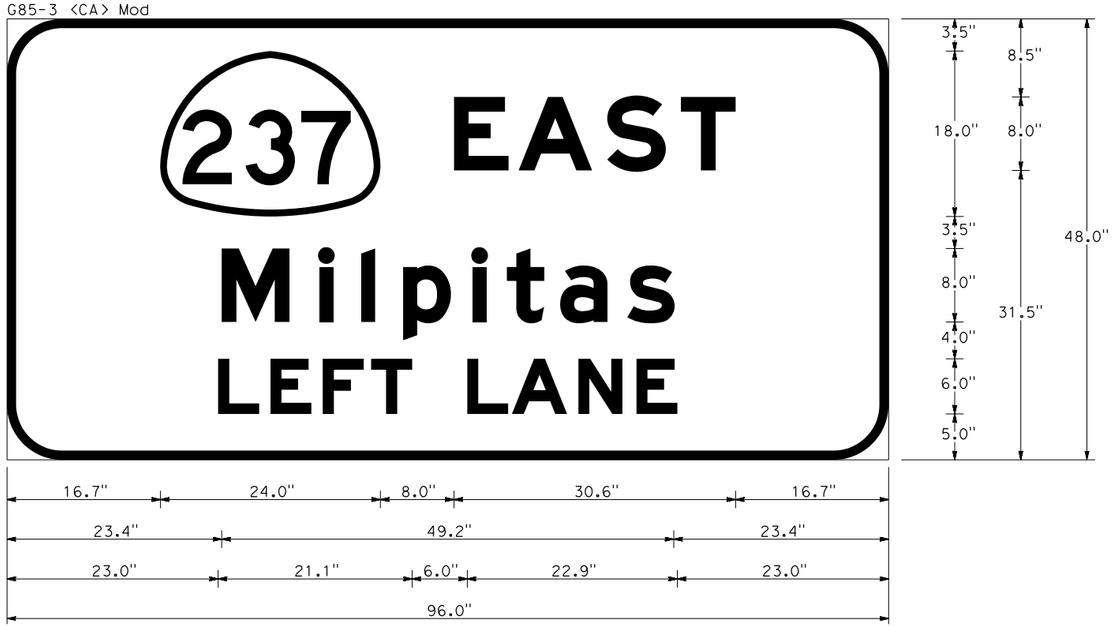

6.0" RADIUS, 1.0" BORDER, WHITE ON GREEN;
"EAST" E Mod; "Milpitas" E Mod; "LEFT LANE" E Mod;

G85-3 <CA> Mod

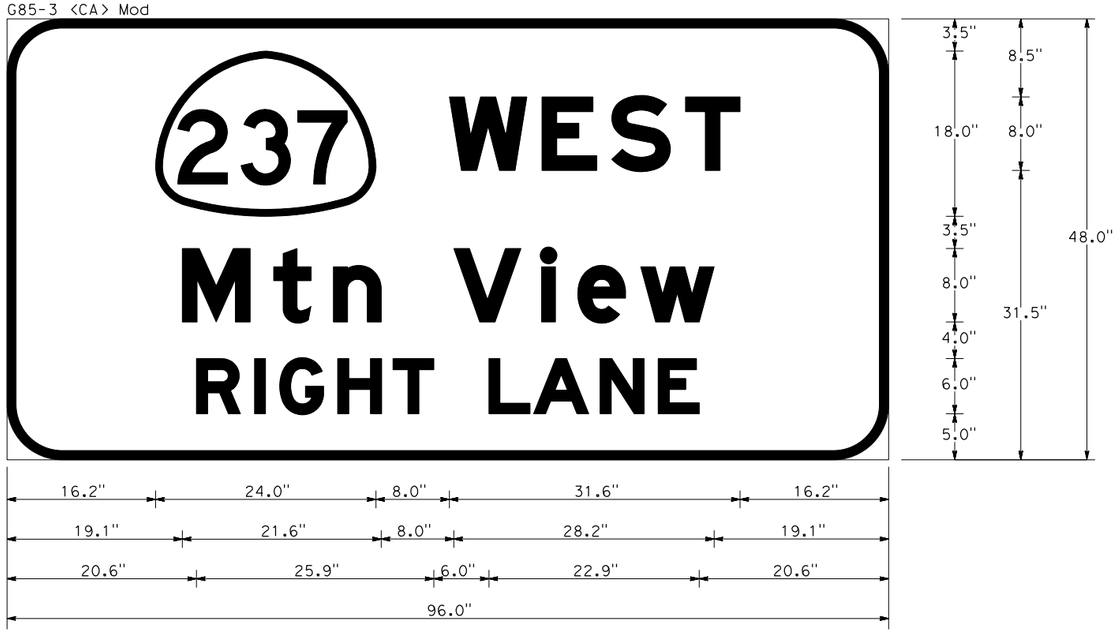

6.0" RADIUS, 1.0" BORDER, WHITE ON GREEN;
"WEST" E Mod; "Mtn View" E Mod; "RIGHT LANE" E Mod;

OS4-1

SIGN DETAILS

NO SCALE

SD-19

STATE OF CALIFORNIA - DEPARTMENT OF TRANSPORTATION	Caltrans
CONSULTANT FUNCTIONAL SUPERVISOR	TIMOTHY J. LEE
CALCULATED-DESIGNED BY	DIANNE A. GALVEZ
CHECKED BY	STEVE LOUPE
REVISED BY	SCV
DATE REVISED	05/03/18
LAST REVISION	01-15-18
DATE PLOTTED	=> 6/20/2018
TIME PLOTTED	=> 11:21:07 AM

X:\237_101_Matnido\000_CAD\Sheets\OA-Signs\OB-Details\0413000204ob019.dgn

BORDER LAST REVISED 7/2/2010 | USERNAME => Eilif | DGN FILE => 0413000204ob019.dgn | RELATIVE BORDER SCALE IS IN INCHES 0 1 2 3 | UNIT 0000 | PROJECT NUMBER & PHASE 0413000204

Dist	COUNTY	ROUTE	POST MILES TOTAL PROJECT	SHEET No.	TOTAL SHEETS
04	SCL	101,237	45.2/45.8, 2.7/3.3	321	736

REGISTERED CIVIL ENGINEER — 6-13-18 DATE

6-20-18
PLANS APPROVAL DATE

REGISTERED PROFESSIONAL ENGINEER — STEVE LOUPE — No. 63575 — Exp. 9/30/18 — CIVIL — STATE OF CALIFORNIA

THE STATE OF CALIFORNIA OR ITS OFFICERS OR AGENTS SHALL NOT BE RESPONSIBLE FOR THE ACCURACY OR COMPLETENESS OF SCANNED COPIES OF THIS PLAN SHEET.

WMH CORPORATION 50 W San Fernando St Suite 950 San Jose, CA 95113	VTA 3331 N First St Building B San Jose, Ca 95134

SIGN OVERLAY

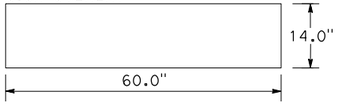

0.0" RADIUS, 0.0" BORDER, GREEN ON GREEN;

OS5-1

G83-5 <CA>

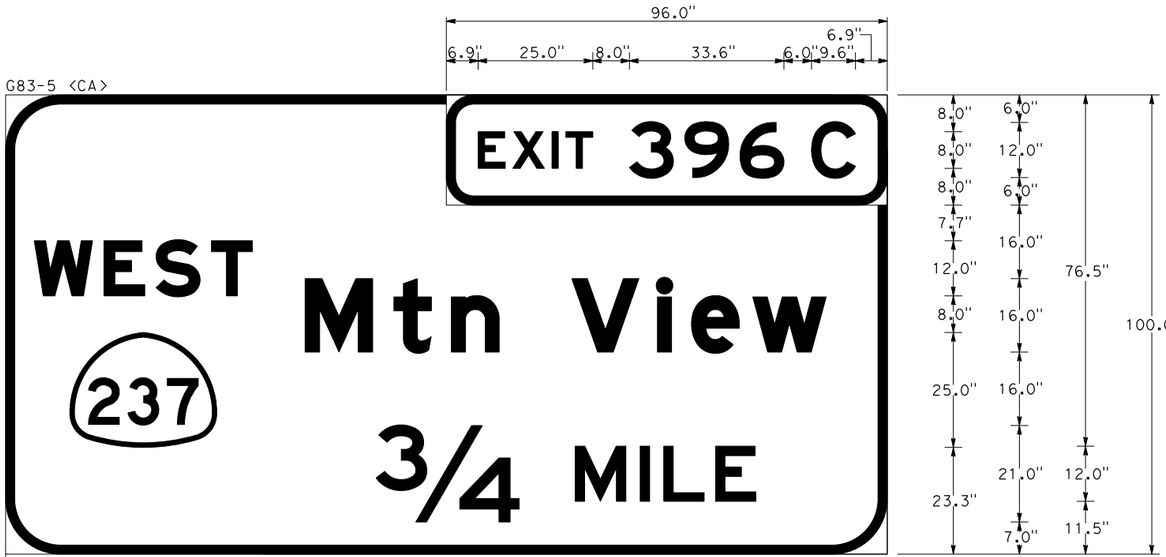

6.0" RADIUS, 2.0" BORDER, WHITE ON GREEN;
"EXIT" E; "396" E; "C" E;
12.0" RADIUS, 2.0" BORDER, WHITE ON GREEN;
"WEST" E Mod;
"Mtn View" E Mod 90% SPACING;
"¾" E; "MILE" E;

OS6-2

SIGN DETAILS

NO SCALE

SD-20

CALCULATED-DESIGNED BY	DIANNE A. GALVEZ	REVISED BY	SCV
CHECKED BY	STEVE LOUPE	DATE REVISED	05/03/18
CONSULTANT FUNCTIONAL SUPERVISOR	TIMOTHY J. LEE		
STATE OF CALIFORNIA - DEPARTMENT OF TRANSPORTATION	Caltrans		

X:\237_101_Mathilda\000_CAD\Sheets\04-Signs\08-Details\0413000204ob020.dgn

LAST REVISION 01-15-18 | DATE PLOTTED => 6/20/2018 TIME PLOTTED => 11:21:10 AM

BORDER LAST REVISED 7/2/2010 | USERNAME => Eilif DGN FILE => 0413000204ob020.dgn | RELATIVE BORDER SCALE IS IN INCHES 0 1 2 3 | UNIT 0000 | PROJECT NUMBER & PHASE 0413000204

Dist	COUNTY	ROUTE	POST MILES TOTAL PROJECT	SHEET No.	TOTAL SHEETS
04	SCL	101,237	45.2/45.8, 2.7/3.3	322	736

REGISTERED CIVIL ENGINEER — 6-13-18 DATE

6-20-18
PLANS APPROVAL DATE

STEVE LOUPE No. 63575 Exp. 9/30/18 CIVIL — REGISTERED PROFESSIONAL ENGINEER — STATE OF CALIFORNIA

THE STATE OF CALIFORNIA OR ITS OFFICERS OR AGENTS SHALL NOT BE RESPONSIBLE FOR THE ACCURACY OR COMPLETENESS OF SCANNED COPIES OF THIS PLAN SHEET.

WMH CORPORATION
50 W San Fernando St
Suite 950
San Jose, CA 95113

VTA
3331 N First St
Building B
San Jose, Ca 95134

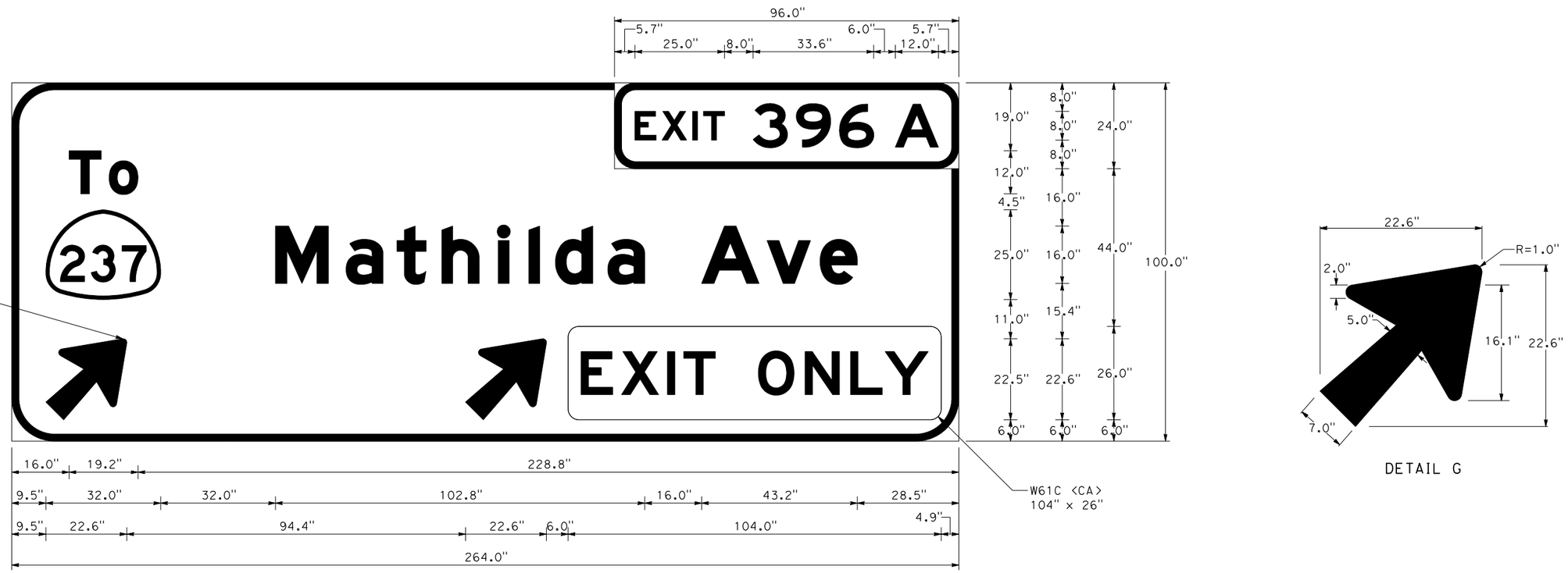

DETAIL G

6.0" RADIUS, 2.0" BORDER, WHITE ON GREEN;
"EXIT" E; "396" E; "A" E;
12.0" RADIUS, 2.0" BORDER, WHITE ON GREEN:
"To" E Mod; ARROW CUSTOM - 28.0" 45°; "Mathilda Ave" E Mod 90% SPACING; ARROW CUSTOM - 28.0" 45°;
W61C <CA>; 104" x 26"
"EXIT ONLY" BLACK E;

OS6-2

SIGN DETAILS

NO SCALE

SD-21

REVISED BY	DATE REVISED
SCV	05/03/18

CALCULATED-DESIGNED BY: DIANNE A. GALVEZ
CHECKED BY: STEVE LOUPE
CONSULTANT FUNCTIONAL SUPERVISOR: TIMOTHY J. LEE

STATE OF CALIFORNIA - DEPARTMENT OF TRANSPORTATION
Caltrans®

LAST REVISION: 01-15-18
DATE PLOTTED => 6/20/2018
TIME PLOTTED => 11:21:14 AM

X:\237_101_Mathilda\000_CAD\Sheets\VA-Signs\0B-Details\0413000204ob021.dgn

BORDER LAST REVISED 7/2/2010 | USERNAME => Eilif | DGN FILE => 0413000204ob021.dgn | RELATIVE BORDER SCALE IS IN INCHES 0 1 2 3 | UNIT 0000 | PROJECT NUMBER & PHASE 0413000204

Dist	COUNTY	ROUTE	POST MILES TOTAL PROJECT	SHEET No.	TOTAL SHEETS
04	SCL	101,237	45.2/45.8, 2.7/3.3	323	736

REGISTERED CIVIL ENGINEER — 6-13-18 DATE

6-20-18
PLANS APPROVAL DATE

REGISTERED PROFESSIONAL ENGINEER — STEVE LOUPE — No. 63575 — Exp. 9/30/18 — CIVIL — STATE OF CALIFORNIA

THE STATE OF CALIFORNIA OR ITS OFFICERS OR AGENTS SHALL NOT BE RESPONSIBLE FOR THE ACCURACY OR COMPLETENESS OF SCANNED COPIES OF THIS PLAN SHEET.

WMH CORPORATION
50 W San Fernando St
Suite 950
San Jose, CA 95113

VTA
3331 N First St
Building B
San Jose, Ca 95134

G23-5 <CA>

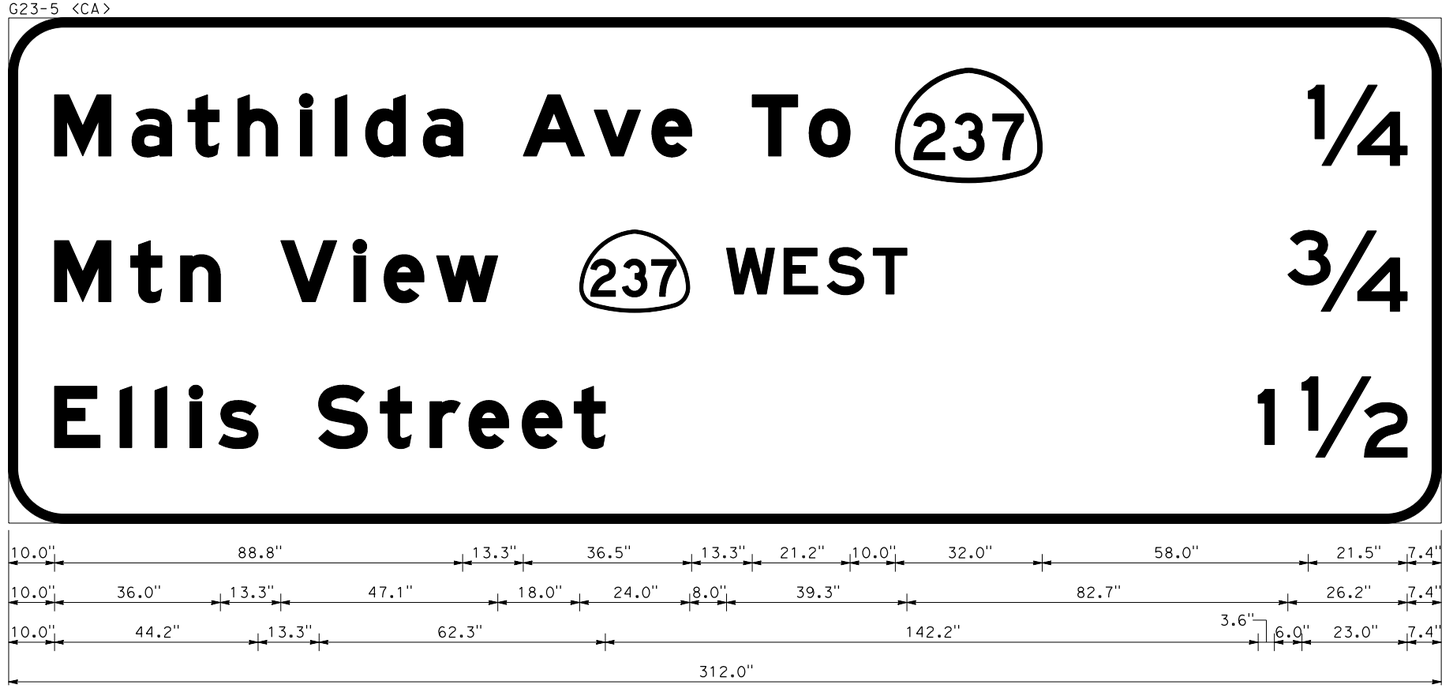

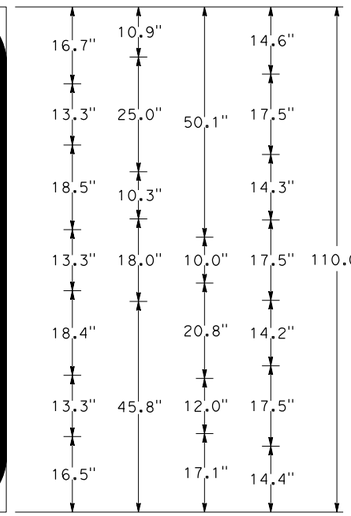

12.0" RADIUS, 2.0" BORDER, WHITE ON GREEN;
"Mathilda Ave To" E Mod ; "1/4" E;
"Mtn View" E Mod; "WEST" E; "3/4" E;
"Ellis Street" E Mod; "1 1/2" E;

OS7-2

SIGN DETAILS
NO SCALE
SD-22

LAST REVISION 01-15-18 | DATE PLOTTED => 6/20/2018 TIME PLOTTED => 11:21:20 AM

REVISED BY	DATE REVISED
SCV	05/03/18

CALCULATED-DESIGNED BY: DIANNE A. GALVEZ
CHECKED BY: STEVE LOUPE
CONSULTANT FUNCTIONAL SUPERVISOR: TIMOTHY J. LEE
STATE OF CALIFORNIA - DEPARTMENT OF TRANSPORTATION
Caltrans

X:\237_101_Mathilda\000_CADVSheets\0A-Signs\0B-Details\0413000204ob022.dgn

BORDER LAST REVISED 7/2/2010 | USERNAME => Eilif | DGN FILE => 0413000204ob022.dgn | RELATIVE BORDER SCALE IS IN INCHES 0 1 2 3 | UNIT 0000 | PROJECT NUMBER & PHASE 0413000204

Dist	COUNTY	ROUTE	POST MILES TOTAL PROJECT	SHEET No.	TOTAL SHEETS
04	SCL	101,237	45.2/45.8, 2.7/3.3	324	736

REGISTERED CIVIL ENGINEER — 6-13-18 DATE

6-20-18
PLANS APPROVAL DATE

STEVE LOUPE No. 63575 Exp. 9/30/18 CIVIL — REGISTERED PROFESSIONAL ENGINEER — STATE OF CALIFORNIA

THE STATE OF CALIFORNIA OR ITS OFFICERS OR AGENTS SHALL NOT BE RESPONSIBLE FOR THE ACCURACY OR COMPLETENESS OF SCANNED COPIES OF THIS PLAN SHEET.

WMH CORPORATION 50 W San Fernando St Suite 950 San Jose, CA 95113	VTA 3331 N First St Building B San Jose, Ca 95134

W61C <CA>

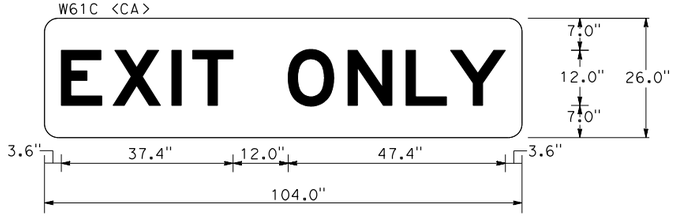

3.0" RADIUS, 0.0" BORDER, YELLOW ON YELLOW;
"EXIT ONLY" BLACK E;

OS8-1

G85-11 <CA>

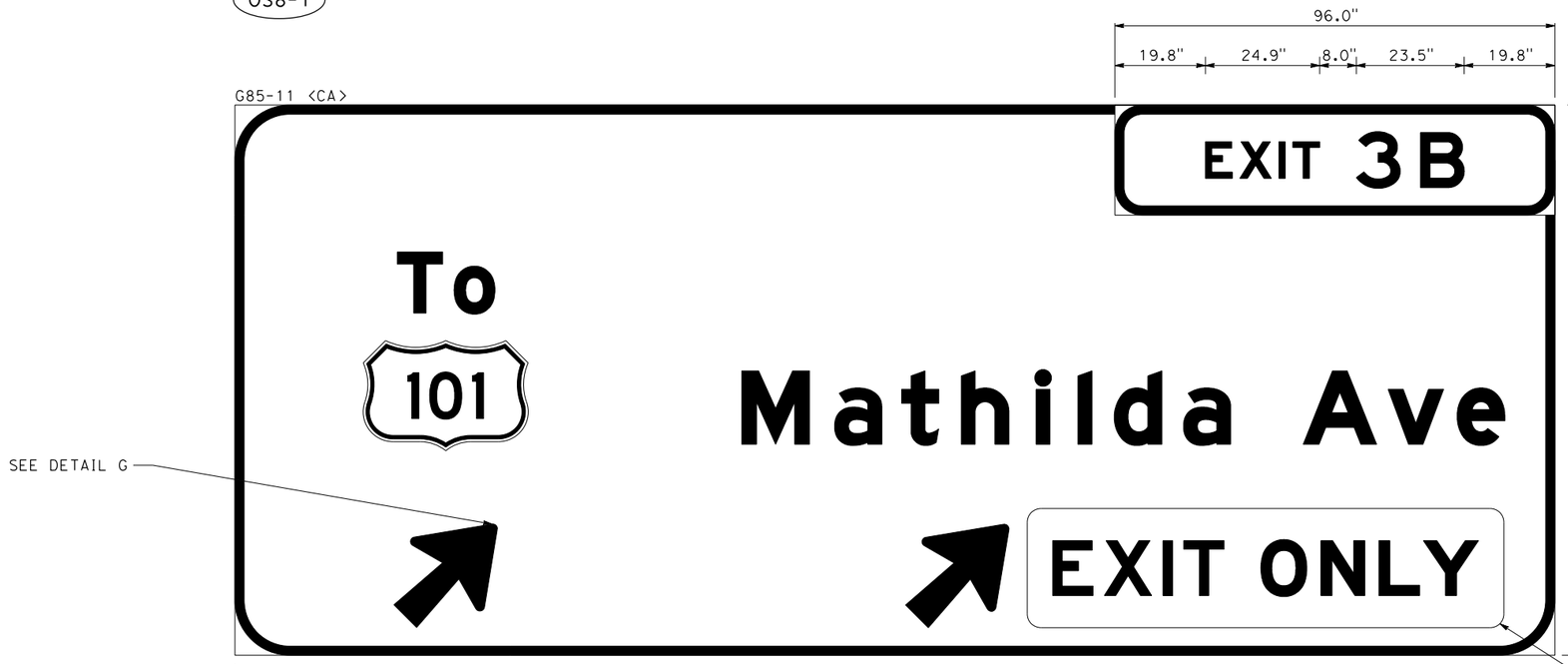

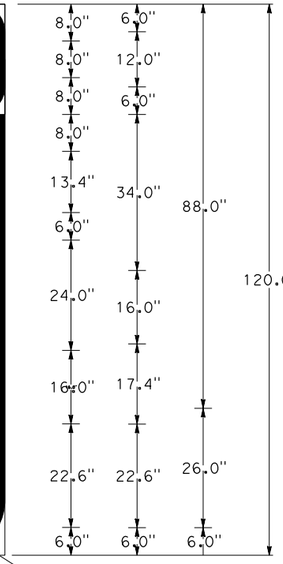

W61C <CA>
104" x 26"

6.0" RADIUS, 2.0" BORDER, WHITE ON GREEN;
"EXIT" E; "3B" E;
12.0" RADIUS, 2.0" BORDER, WHITE ON GREEN;
"To" E Mod; ARROW CUSTOM - 28.0" 45°; "Mathilda Ave" E Mod; ARROW CUSTOM - 28.0" 45°;
W61C <CA>; 104" x 26"
"EXIT" BLACK E; "ONLY" BLACK E Mod;

OS9-2

SIGN DETAILS

NO SCALE

SD-23

REVISED BY	DATE REVISED
SCV	05/03/18

CALCULATED-DESIGNED BY: DIANNE A. GALVEZ
CHECKED BY: STEVE LOUPE
DISTRICT SUPERVISOR: TIMOTHY J. LEE
CONSULTANT FUNCTIONAL SUPERVISOR:

STATE OF CALIFORNIA - DEPARTMENT OF TRANSPORTATION
Caltrans

LAST REVISION 01-15-18
DATE PLOTTED => 6/20/2018
TIME PLOTTED => 11:21:24 AM

X:\237_101_Mathilda\000_CAD\Sheets\04-Signs\08-Details\0413000204ob023.dgn

BORDER LAST REVISED 7/2/2010 | USERNAME => Eilif
DGN FILE => 0413000204ob023.dgn | RELATIVE BORDER SCALE IS IN INCHES 0 1 2 3 | UNIT 0000 | PROJECT NUMBER & PHASE 0413000204

Dist	COUNTY	ROUTE	POST MILES TOTAL PROJECT	SHEET No.	TOTAL SHEETS
04	SCL	101,237	45.2/45.8, 2.7/3.3	325	736

REGISTERED CIVIL ENGINEER — 6-13-18 DATE

6-20-18
PLANS APPROVAL DATE

STEVE LOUPE No. 63575 Exp. 9/30/18 CIVIL — REGISTERED PROFESSIONAL ENGINEER — STATE OF CALIFORNIA

THE STATE OF CALIFORNIA OR ITS OFFICERS OR AGENTS SHALL NOT BE RESPONSIBLE FOR THE ACCURACY OR COMPLETENESS OF SCANNED COPIES OF THIS PLAN SHEET.

WMH CORPORATION
50 W San Fernando St
Suite 950
San Jose, CA 95113

VTA
3331 N First St
Building B
San Jose, Ca 95134

G83-5 <CA>

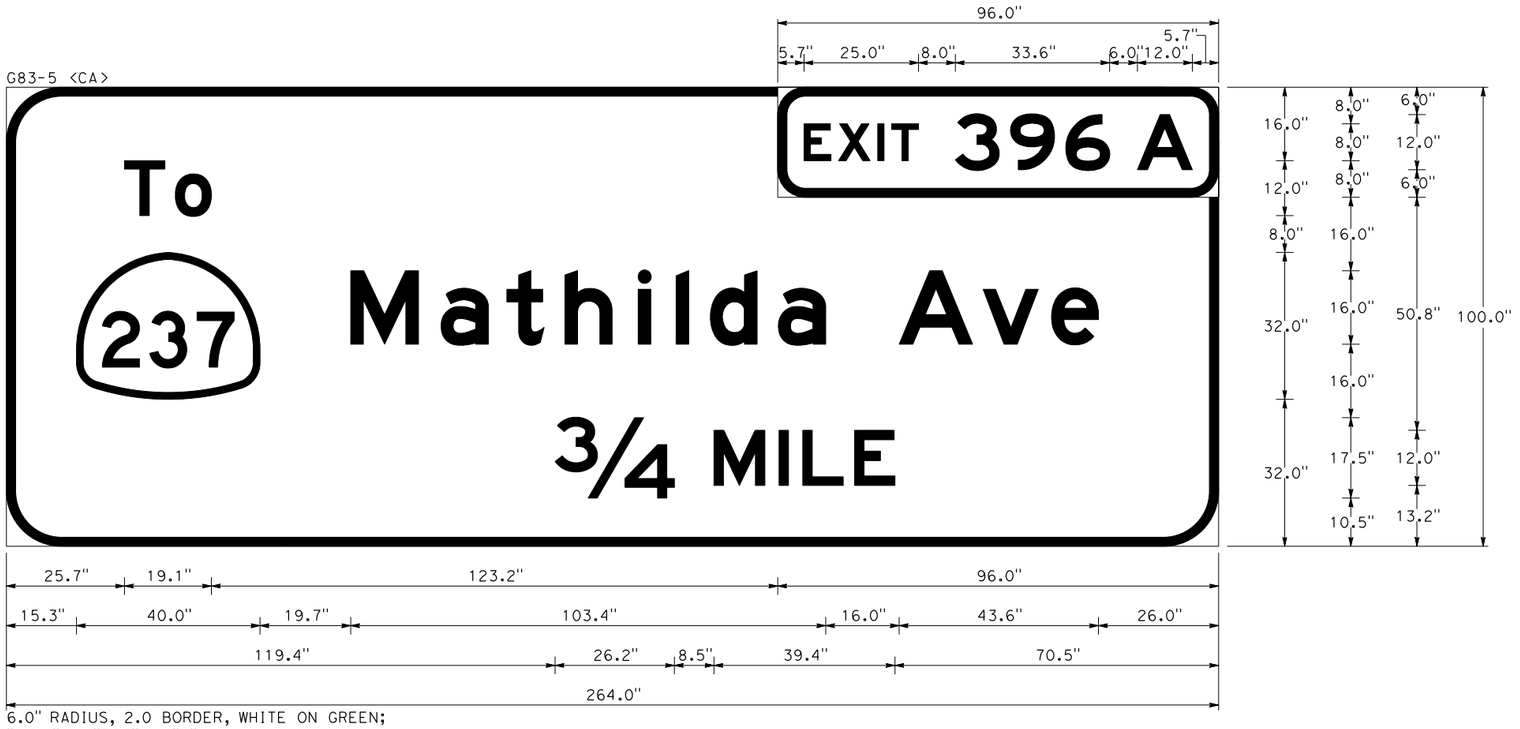

6.0" RADIUS, 2.0 BORDER, WHITE ON GREEN;
"EXIT" E; "396" E; "A" E;
12.0" RADIUS, 2.0" BORDER, WHITE ON GREEN;
"To" E; "Mathilda Ave" E 90% SPACING; "¾" E; "MILE" E;

OS11-2

G23-5 <CA>

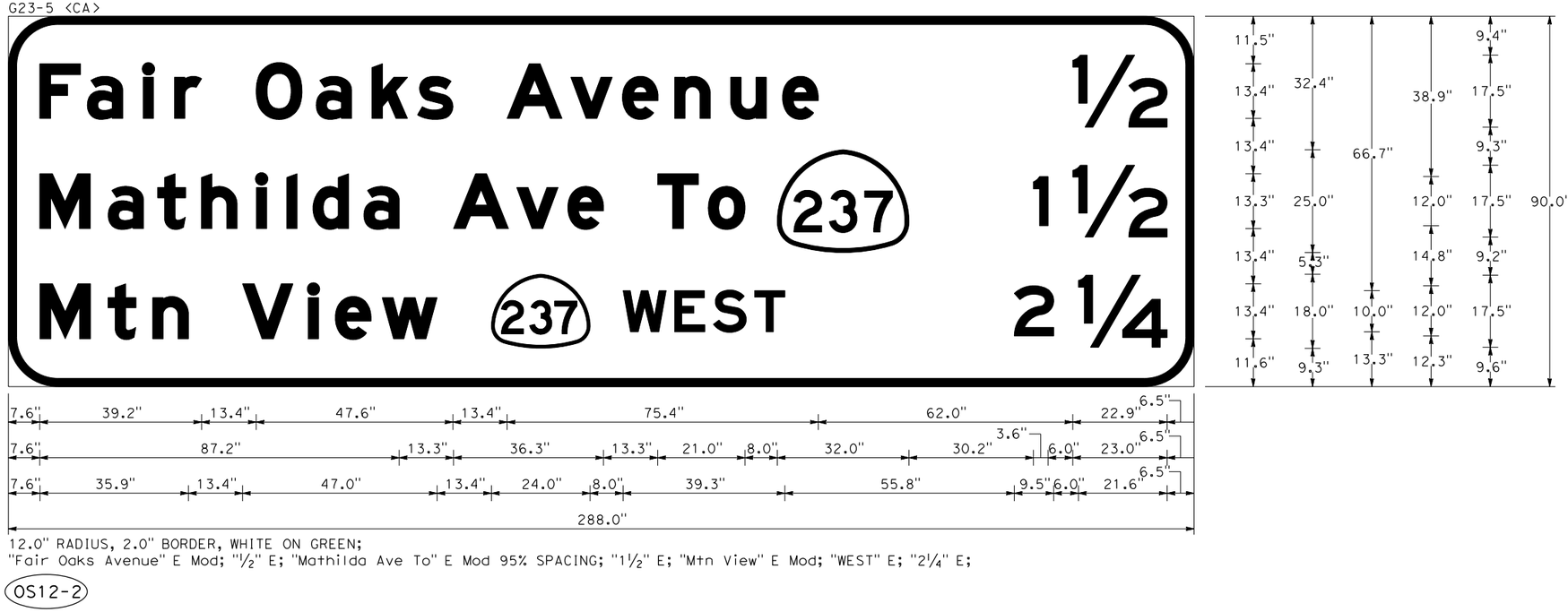

12.0" RADIUS, 2.0" BORDER, WHITE ON GREEN;
"Fair Oaks Avenue" E Mod; "½" E; "Mathilda Ave To" E Mod 95% SPACING; "1½" E; "Mtn View" E Mod; "WEST" E; "2¼" E;

OS12-2

SIGN DETAILS
NO SCALE
SD-24

CALCULATED-DESIGNED BY	CHECKED BY	REVISED BY	DATE REVISED
DIANNE A. GALVEZ	STEVE LOUPE	SCV	05/03/18

CONSULTANT FUNCTIONAL SUPERVISOR: TIMOTHY J. LEE

STATE OF CALIFORNIA - DEPARTMENT OF TRANSPORTATION
Caltrans

LAST REVISION: DATE PLOTTED => 6/20/2018
01-15-18 TIME PLOTTED => 11:21:30 AM

X:\237_101_Mathilda\000_CADSheets\OA-Signs\OB-Details\0413000204ob024.dgn

BORDER LAST REVISED 7/2/2010 | USERNAME => Eilif | DGN FILE => 0413000204ob024.dgn | RELATIVE BORDER SCALE IS IN INCHES 0 1 2 3 | UNIT 0000 | PROJECT NUMBER & PHASE 0413000204

Dist	COUNTY	ROUTE	POST MILES TOTAL PROJECT	SHEET No.	TOTAL SHEETS
04	SCL	101,237	45.2/45.8, 2.7/3.3	326	736

REGISTERED CIVIL ENGINEER 6-13-18 DATE

6-20-18
PLANS APPROVAL DATE

REGISTERED PROFESSIONAL ENGINEER STEVE LOUPE No. 63575 Exp. 9/30/18 CIVIL STATE OF CALIFORNIA

THE STATE OF CALIFORNIA OR ITS OFFICERS OR AGENTS SHALL NOT BE RESPONSIBLE FOR THE ACCURACY OR COMPLETENESS OF SCANNED COPIES OF THIS PLAN SHEET.

WMH CORPORATION
50 W San Fernando St
Suite 950
San Jose, CA 95113

VTA
3331 N First St
Building B
San Jose, Ca 95134

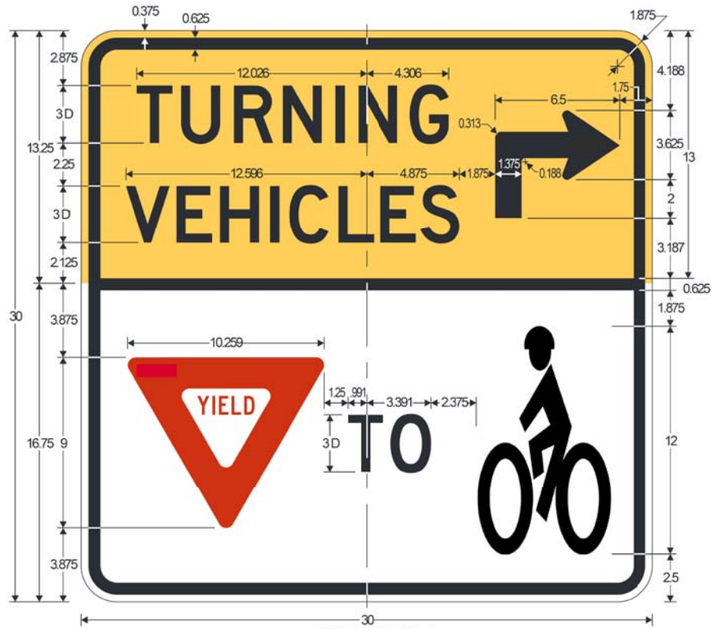

R10-15R Mod
TURNING VEHICLES YIELD TO BICYCLISTS

R10-15L

UPPER SECTION
COLORS: LEGEND, BORDER - BLACK
BACKGROUND - YELLOW (RETROREFLECTIVE)

LOWER SECTION
COLORS: LEGEND, BORDER - BLACK
YIELD SYMBOL - RED (RETROREFLECTIVE)
BACKGROUND - WHITE (RETROREFLECTIVE)

S8-10

SIGN DETAILS
NO SCALE
SD-25

STATE OF CALIFORNIA - DEPARTMENT OF TRANSPORTATION
Caltrans

CONSULTANT FUNCTIONAL SUPERVISOR: TIMOTHY J. LEE
CALCULATED-DESIGNED BY: DIANNE A. GALVEZ
CHECKED BY: STEVE LOUPE
REVISED BY: SCV
DATE REVISED: 05/03/18

X:\237_101_Mathilda\000_CAD\Sheets\OA-Signs\OB-Details\0413000204ob025.dgn

LAST REVISION 01-15-18
DATE PLOTTED => 6/20/2018
TIME PLOTTED => 11:21:34 AM

BORDER LAST REVISED 7/2/2010
USERNAME => Eilif
DGN FILE => 0413000204ob025.dgn
RELATIVE BORDER SCALE IS IN INCHES 0 1 2 3
UNIT 0000
PROJECT NUMBER & PHASE 0413000204

Dist	COUNTY	ROUTE	POST MILES TOTAL PROJECT	SHEET No.	TOTAL SHEETS
04	SCL	101,237	45.2/45.8, 2.7/3.3	327	736

REGISTERED CIVIL ENGINEER 6-13-18 DATE

6-20-18
PLANS APPROVAL DATE

REGISTERED PROFESSIONAL ENGINEER STEVE LOUPE No. 63575 Exp. 9/30/18 CIVIL STATE OF CALIFORNIA

THE STATE OF CALIFORNIA OR ITS OFFICERS OR AGENTS SHALL NOT BE RESPONSIBLE FOR THE ACCURACY OR COMPLETENESS OF SCANNED COPIES OF THIS PLAN SHEET.

WMH CORPORATION
50 W San Fernando St
Suite 950
San Jose, CA 95113

VTA
3331 N First St
Building B
San Jose, Ca 95134

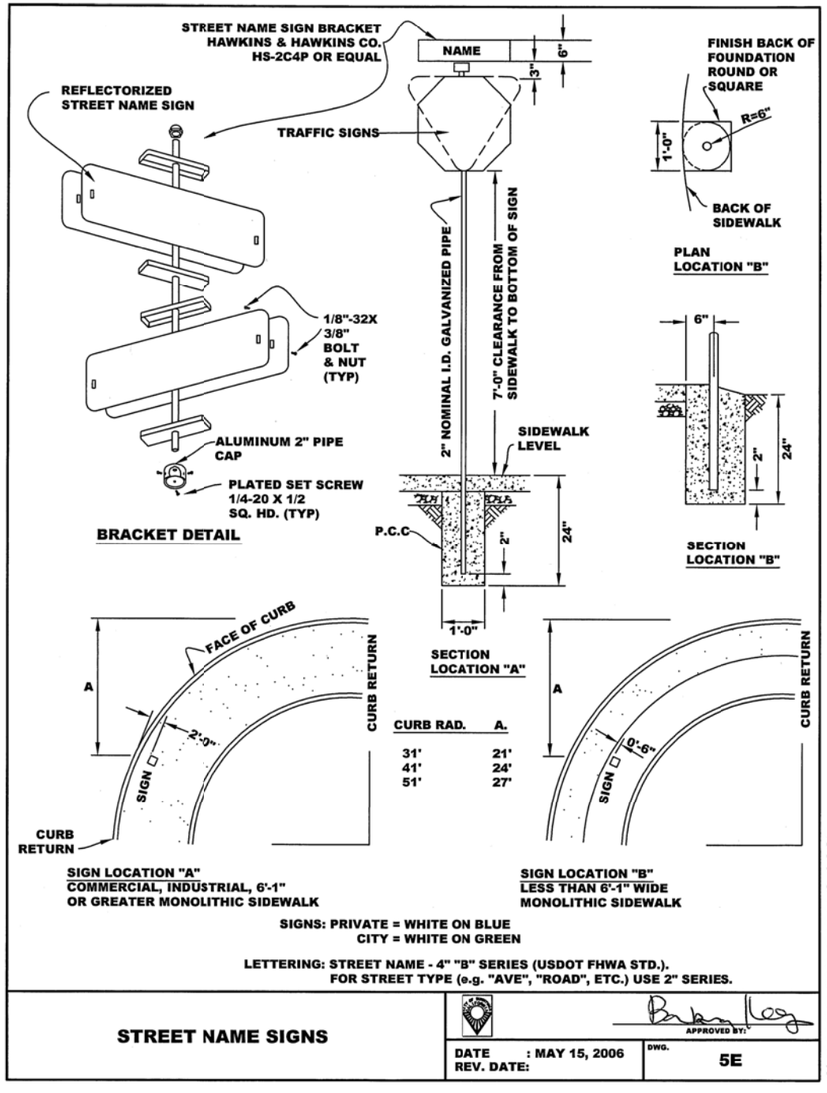

CURB RAD.	A.
31'	21'
41'	24'
51'	27'

SIGN LOCATION "A"
COMMERCIAL, INDUSTRIAL, 6'-1" OR GREATER MONOLITHIC SIDEWALK

SIGN LOCATION "B"
LESS THAN 6'-1" WIDE MONOLITHIC SIDEWALK

SIGNS: PRIVATE = WHITE ON BLUE
CITY = WHITE ON GREEN

LETTERING: STREET NAME - 4" "B" SERIES (USDOT FHWA STD.).
FOR STREET TYPE (e.g. "AVE", "ROAD", ETC.) USE 2" SERIES.

STREET NAME SIGNS

APPROVED BY:

DATE : MAY 15, 2006
REV. DATE:

DWG. 5E

2006 STANDARD DETAILS

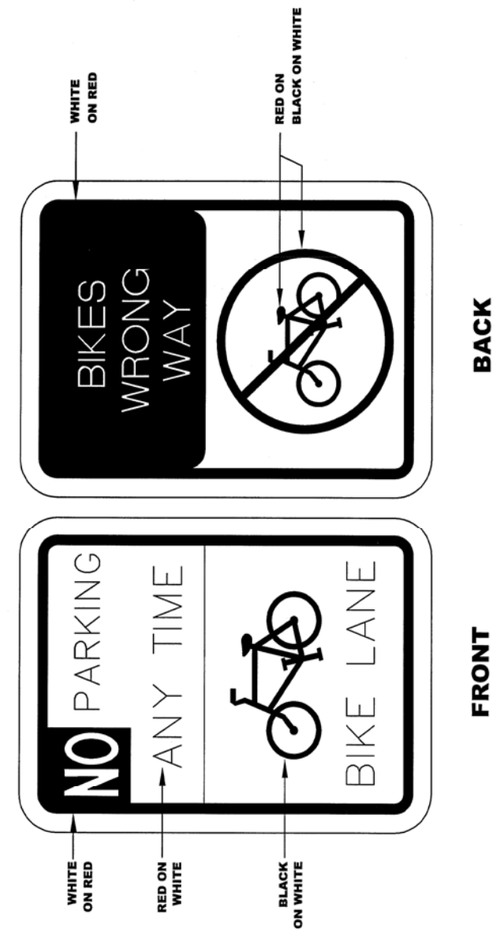

COMBINATION R26/R81 SIGN

APPROVED BY:

DATE : JUNE 30, 2006

DWG. 4E-2

2006 STANDARD DETAILS

S1-25 S1-45 S2-44 S3-62 S3-75 S3-118 S4-9 S8-12 S9-31
S1-36 S2-37 S2-45 S3-70 S3-84 S4-6 S6-8 S8-13 S9-38
S1-42 S2-42 S3-42 S3-72 S3-91 S4-7 S8-11 S9-28 S9-39

S1-39 S2-36 S4-7
S1-40 S3-89 S4-9
S1-41 S4-6

SIGN DETAILS
NO SCALE
SD-26

STATE OF CALIFORNIA - DEPARTMENT OF TRANSPORTATION
Caltrans

CONSULTANT FUNCTIONAL SUPERVISOR: TIMOTHY J. LEE
CALCULATED-DESIGNED BY: DIANNE A. GALVEZ
CHECKED BY: STEVE LOUPE
REVISED BY: SCV
DATE REVISED: 05/03/18

X:\237_101_Mathilda\000_CAD\Sheets\OA-Signs\OB-Details\0413000204ob026.dgn

LAST REVISION 01-15-18
DATE PLOTTED => 6/20/2018
TIME PLOTTED => 11:21:51 AM

BORDER LAST REVISED 7/2/2010
USERNAME => Eilif
DGN FILE => 0413000204ob026.dgn
RELATIVE BORDER SCALE IS IN INCHES 0 1 2 3
UNIT 0000
PROJECT NUMBER & PHASE 0413000204

Dist	COUNTY	ROUTE	POST MILES TOTAL PROJECT	SHEET No.	TOTAL SHEETS
04	SCL	101,237	45.2/45.8, 2.7/3.3	328	736

REGISTERED CIVIL ENGINEER 6-13-18 DATE

6-20-18
PLANS APPROVAL DATE

REGISTERED PROFESSIONAL ENGINEER GUOPING XU No. 63977 Exp. 9/30/18 CIVIL STATE OF CALIFORNIA

THE STATE OF CALIFORNIA OR ITS OFFICERS OR AGENTS SHALL NOT BE RESPONSIBLE FOR THE ACCURACY OR COMPLETENESS OF SCANNED COPIES OF THIS PLAN SHEET.

WMH CORPORATION
50 W San Fernando St
Suite 950
San Jose, CA 95113

VTA
3331 N First St
Building B
San Jose, Ca 95134

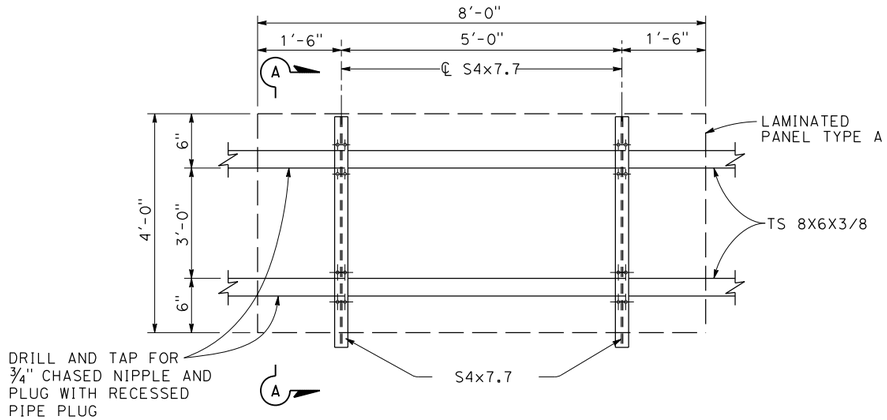

SIGN MOUNTING DETAIL

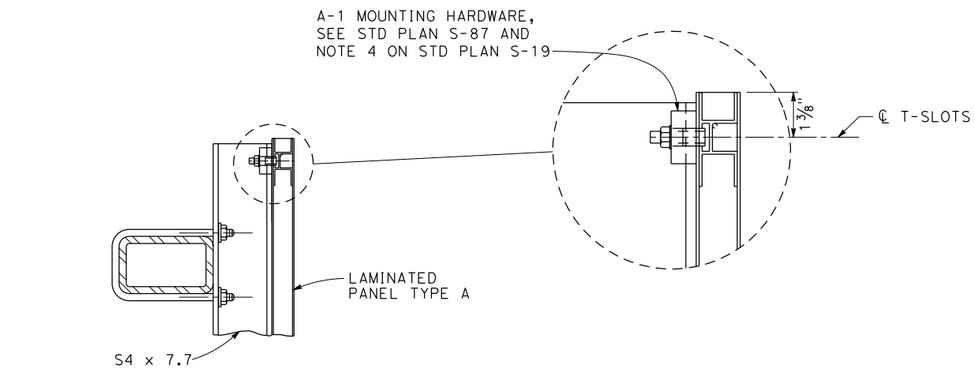

SECTION A-A

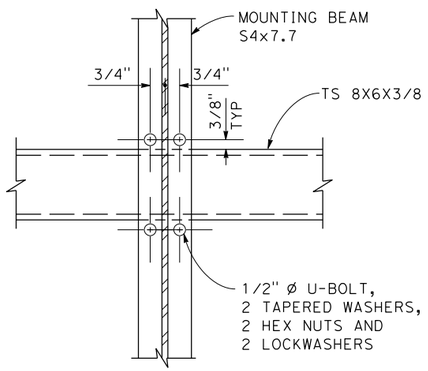

SECTION B-B

THE CONTRACTOR SHALL VERIFY ALL CONTROLLING FIELD DIMENSIONS BEFORE ORDERING OR FABRICATING ANY MATERIAL

SIGN MOUNTING DETAILS

NO SCALE

SD-27

STATE OF CALIFORNIA - DEPARTMENT OF TRANSPORTATION
Caltrans
CONSULTANT FUNCTIONAL SUPERVISOR: STEVE LOUPE
CALCULATED-DESIGNED BY: G. XU
CHECKED BY: S. HAAS
REVISED BY: GX
DATE REVISED: 04/23/18

X:\237_101_Mathilda\000_CAD\Sheets\0A-Signs\0B-Details\0413000204ob027.dgn

LAST REVISION 01-15-18
DATE PLOTTED => 6/20/2018
TIME PLOTTED => 11:22:26 AM

BORDER LAST REVISED 7/2/2010
USERNAME => Eilif
DGN FILE => 0413000204ob027.dgn
RELATIVE BORDER SCALE IS IN INCHES 0 1 2 3
UNIT 0000
PROJECT NUMBER & PHASE 0413000204

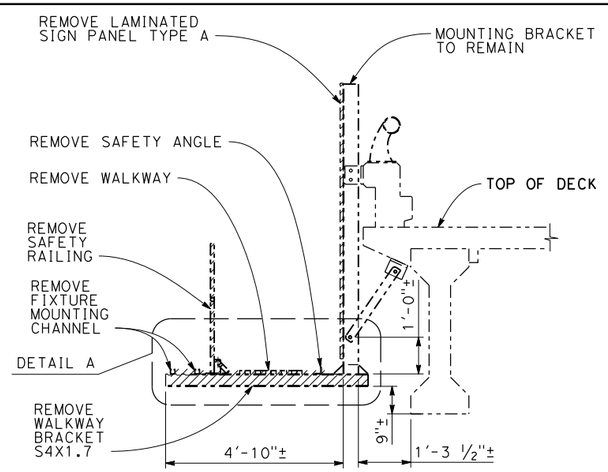

SECTION A-A

1/2"=1'-0"

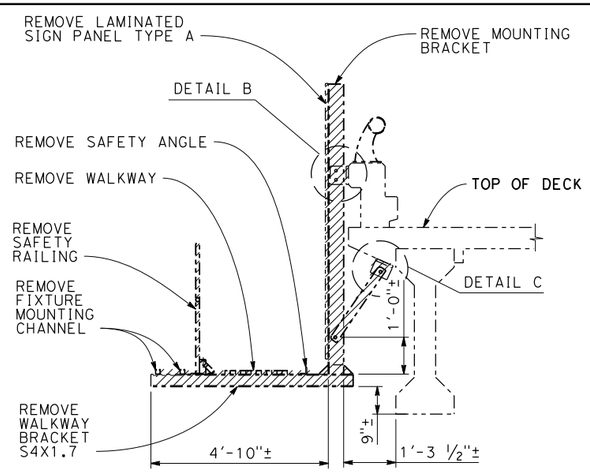

SECTION B-B

1/2"=1'-0"

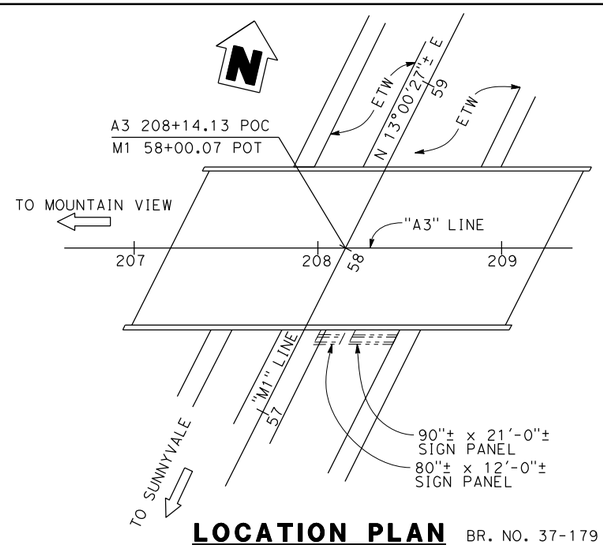

LOCATION PLAN

BR. NO. 37-179

1"=40'

Dist	COUNTY	ROUTE	POST MILES TOTAL PROJECT	SHEET No.	TOTAL SHEETS
04	SCL	101,237	45.2/45.8, 2.7/3.3	329	736

6-13-18
REGISTERED CIVIL ENGINEER — DATE

6-20-18
PLANS APPROVAL DATE

REGISTERED PROFESSIONAL ENGINEER — GUOPING XU — No. 63977 — Exp. 9/30/18 — CIVIL — STATE OF CALIFORNIA

THE STATE OF CALIFORNIA OR ITS OFFICERS OR AGENTS SHALL NOT BE RESPONSIBLE FOR THE ACCURACY OR COMPLETENESS OF SCANNED COPIES OF THIS PLAN SHEET.

WMH CORPORATION 50 W San Fernando St Suite 950 San Jose, CA 95113	VTA 3331 N First St Building B San Jose, Ca 95134

LEGEND:

- REMOVE EXISTING SIGN STRUCTURE (PORTION) & SIGN PANEL
- EXISTING STRUCTURE

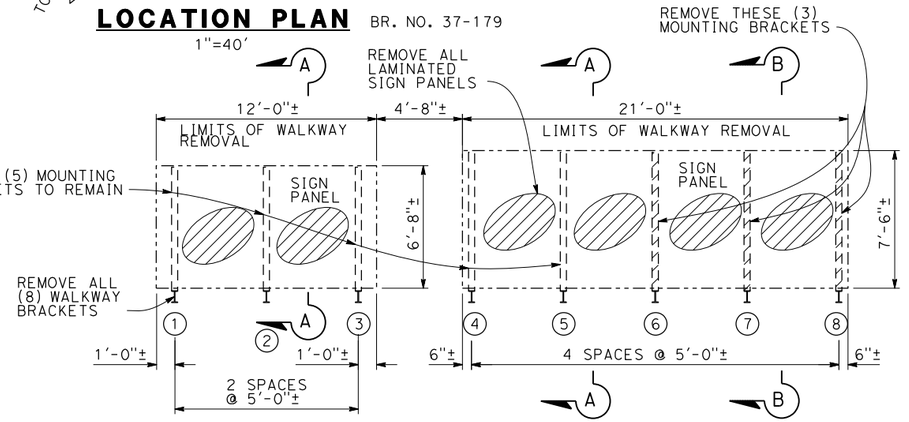

LIMITS OF REMOVAL AT OH SIGN STRUCTURE OS 3-2

1/4"=1'-0"

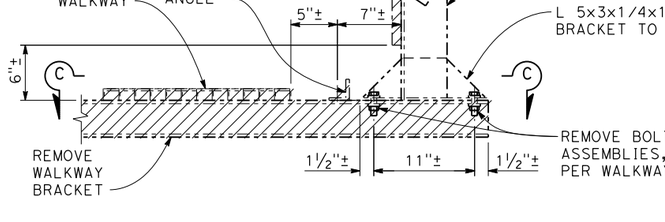

DETAIL A

1 1/2"=1'-0"

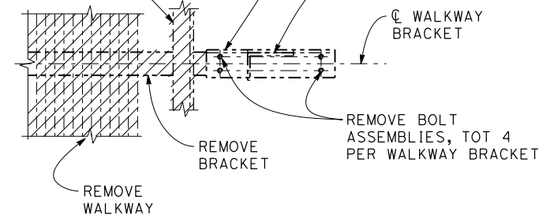

SECTION C-C

1 1/2"=1'-0"

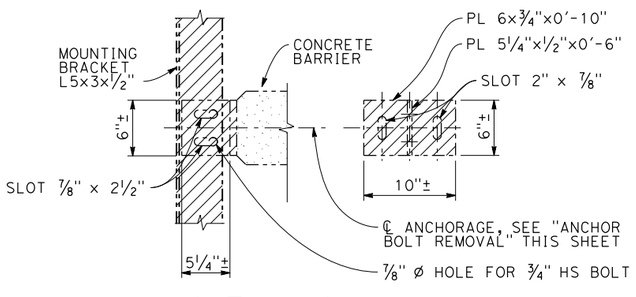

DETAIL B

1 1/2"=1'-0"

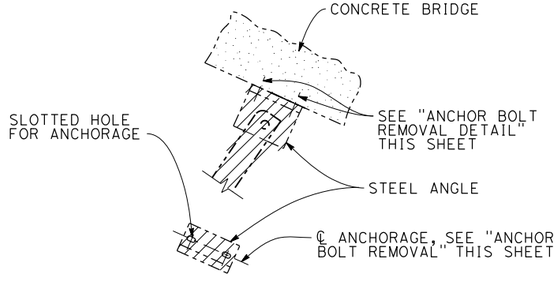

DETAIL C

1 1/2"=1'-0"

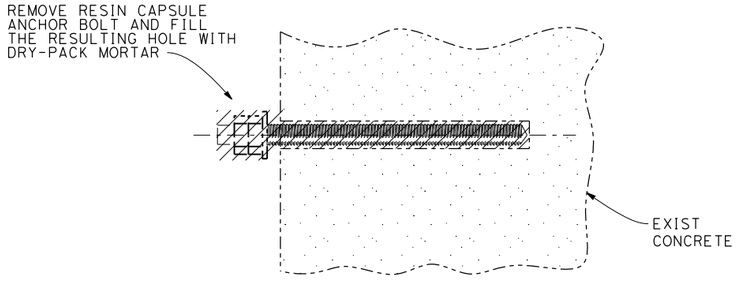

ANCHOR BOLT REMOVAL

6"=1'-0"

SIGN STRUCTURE WALKWAY REMOVAL DETAILS

SCALE AS SHOWN

SD-28

REVISED BY	GX			
DATE REVISED	04/23/18			
CALCULATED-DESIGNED BY	G. XU			
CHECKED BY	S. HAAS			
DEPARTMENT OF TRANSPORTATION	CONSULTANT FUNCTIONAL SUPERVISOR: STEVE LOUPE			

STATE OF CALIFORNIA - DEPARTMENT OF TRANSPORTATION

Caltrans

LAST REVISION: 01-15-18
DATE PLOTTED => 6/20/2018
TIME PLOTTED => 11:22:29 AM

X:\237_101_Mathilde\000_CADSheets\0A-Signs\0B-Details\0413000204ob028.dgn

BORDER LAST REVISED 7/2/2010 | USERNAME => Eilif | DGN FILE => 0413000204ob028.dgn | RELATIVE BORDER SCALE IS IN INCHES 0 1 2 3 | UNIT 0000 | PROJECT NUMBER & PHASE 0413000204

Dist	COUNTY	ROUTE	POST MILES TOTAL PROJECT	SHEET No.	TOTAL SHEETS
04	SCL	101,237	45.2/45.8, 2.7/3.3	330	736

REGISTERED CIVIL ENGINEER — DATE: 6-13-18

6-20-18
PLANS APPROVAL DATE

GUOPING XU
No. 63977
Exp. 9/30/18
CIVIL
REGISTERED PROFESSIONAL ENGINEER
STATE OF CALIFORNIA

THE STATE OF CALIFORNIA OR ITS OFFICERS OR AGENTS SHALL NOT BE RESPONSIBLE FOR THE ACCURACY OR COMPLETENESS OF SCANNED COPIES OF THIS PLAN SHEET.

WMH CORPORATION 50 W San Fernando St Suite 950 San Jose, CA 95113	VTA 3331 N First St Building B San Jose, Ca 95134

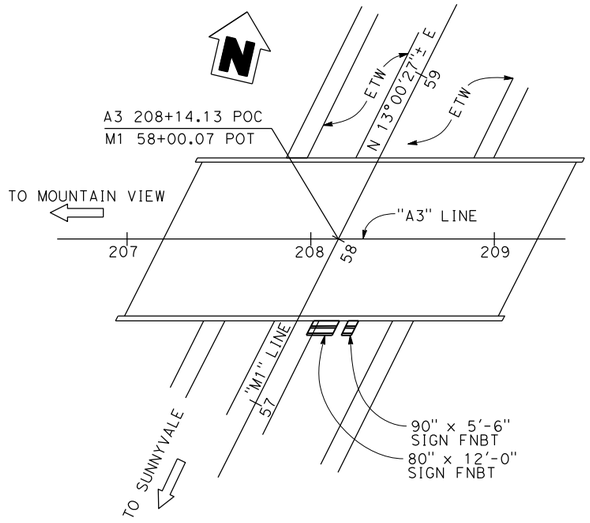

LOCATION PLAN

1"=40'
BR. NO. 37-179

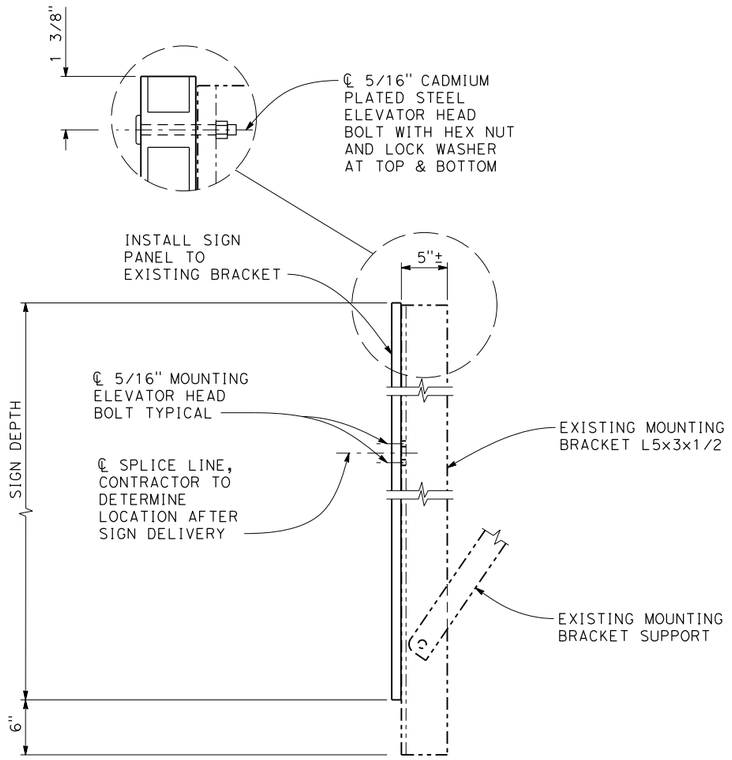

PANEL MOUNTING DETAIL

1 1/2"=1'-0"

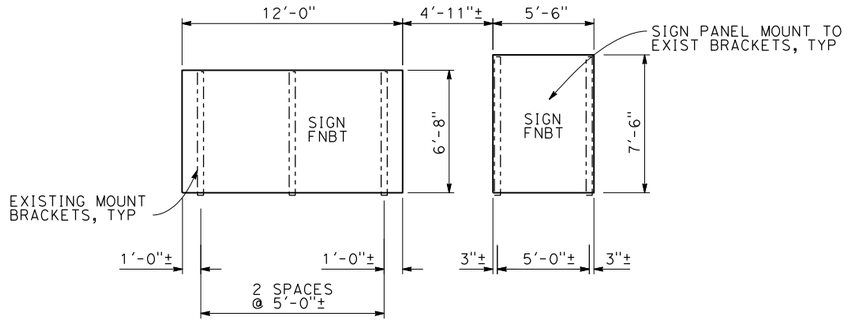

MOUNTING BRACKET ASSEMBLY SPACING

1/4"=1'-0"

THE CONTRACTOR SHALL VERIFY ALL CONTROLLING FIELD DIMENSIONS BEFORE ORDERING OR FABRICATING ANY MATERIAL

SIGN MOUNTING DETAILS

SCALE AS SHOWN

SD-29

REVISED BY	DATE REVISED
GX	04/23/18

CALCULATED-DESIGNED BY: G. XU
CHECKED BY: S. HAAS
CONSULTANT FUNCTIONAL SUPERVISOR: STEVE LOUPE
STATE OF CALIFORNIA - DEPARTMENT OF TRANSPORTATION
Caltrans

LAST REVISION: 01-15-18
DATE PLOTTED => 6/20/2018
TIME PLOTTED => 11:22:33 AM

X:\237_101_Mathilda\000_CAD\Sheets\OA-Signs\OB-Details\0413000204ob029.dgn

BORDER LAST REVISED 7/2/2010 | USERNAME => Eilif | DGN FILE => 0413000204ob029.dgn | RELATIVE BORDER SCALE IS IN INCHES 0 1 2 3 | UNIT 0000 | PROJECT NUMBER & PHASE 0413000204

Dist	COUNTY	ROUTE	POST MILES TOTAL PROJECT	SHEET No.	TOTAL SHEETS
04	SCL	101,237	45.2/45.8, 2.7/3.3	331	736

REGISTERED CIVIL ENGINEER — 6-13-18 DATE

6-20-18
PLANS APPROVAL DATE

STEVE LOUPE No. 63575 Exp. 9/30/18 CIVIL — REGISTERED PROFESSIONAL ENGINEER — STATE OF CALIFORNIA

THE STATE OF CALIFORNIA OR ITS OFFICERS OR AGENTS SHALL NOT BE RESPONSIBLE FOR THE ACCURACY OR COMPLETENESS OF SCANNED COPIES OF THIS PLAN SHEET.

WMH CORPORATION
50 W San Fernando St
Suite 950
San Jose, CA 95113

VTA
3331 N First St
Building B
San Jose, Ca 95134

ROADSIDE SIGN QUANTITIES SUMMARY

SHEET No.	SIGN No.	SIGN CODE		SIGN PANEL SIZE	"C" DIM IN FEET	POST SIZE AND LENGTH					ROADSIDE SIGN (METAL POST)	ROADSIDE SIGN (WOOD POST)		INSTALL SIGN (SSBM)	REMOVE ROADSIDE SIGN (SSBM)	REMOVE ROADSIDE SIGN	INSTALL SIGN (MAST-ARM HANGER METHOD)	INSTALL ROADSIDE SIGN PANEL ON EXISTING POST	METAL (BARRIER MOUNTED SIGN)	REMARKS
						4" X 4"	4" X 6"	6" X 6"	6" X 8"	2" GALVANIZED PIPE	ONE POST	ONE POST	TWO POST							
		FEDERAL	CALIFORNIA	IN		FT						EA							LB	
S-1	S1-1	R14-1 Mod														1				
	S1-2	R14-1 Mod		24 x 30	7	13						1								
	S1-3	R6-1													1					
		R9-3													1					
		R9-3bP													1					
		R9-3													1					
		R9-3bP													1					
			R73-2												1					
	S1-4		R73-2	24 x 24	7									1						
	S1-5	R5-1														1				
		R5-1a																		
	S1-6	R5-10c														1				
	S1-7	R5-1														1				
		R5-1a																		
		W4-3																		
	S1-8	R5-1		36 x 36	2		12					1								
		R5-1a		36 x 24																
	S1-9	R5-10c		24 x 12	7	12						1								
	S1-10	R5-1		36 x 36	2		12					1								
		R5-1a		36 x 24																
	S1-11	W11-2		36 x 36	7	15						1								
		W16-7P (Lt)		24 x 12																
	S1-12		G92	48 x 30	2			14				1								
			G26-2 (101)	28 x 24																
		M3-3		24 x 12																
		M6-2a (Rt)		21 x 15																
	S1-13		R91-1	36 x 54	7		16												119	
	S1-14		R91-3													1				
	S1-15	W12-2 (15'-2")													1					
	S1-16	W12-2 (15'-2")		36 x 36	7	14						1								
	S1-17		G92	48 x 30	2			14				1								
			G26-2 (101)	28 x 24																
		M3-3		24 x 12																
		M6-1 (Rt)		21 x 15																
	S1-18		G8-7													1				
	S1-19		G92												1					
			G26-2 (101)												1					
		M3-3													1					
		M6-2a (Lt)													1					
	S1-20		G8-7	60 x 36	7	14							1							
	S1-21		R26/R81													1				
	S1-22	W1-1a (10) (Lt)														1				
SUBTOTAL SQ-1												8	1	1	11	8			119	

SIGN QUANTITIES SQ-1

CALCULATED-DESIGNED BY	DIANNE A. GALVEZ	REVISED BY	SCV
CHECKED BY	C. CHRES	DATE REVISED	05/03/18

CONSULTANT FUNCTIONAL SUPERVISOR: TIMOTHY J. LEE

STATE OF CALIFORNIA - DEPARTMENT OF TRANSPORTATION — Caltrans®

X:\237_101_Mathilde\000_CAD\Sheets\QA-Signs\QC-Quantities\0413000204oc001.dgn

LAST REVISION 01-15-18 — DATE PLOTTED => 6/20/2018 — TIME PLOTTED => 11:20:36 AM

BORDER LAST REVISED 7/2/2010 | USERNAME => Eilif | DGN FILE => 0413000204oc001.dgn | RELATIVE BORDER SCALE IS IN INCHES 0 1 2 3 | UNIT 0000 | PROJECT NUMBER & PHASE 0413000204

Dist	COUNTY	ROUTE	POST MILES TOTAL PROJECT	SHEET No.	TOTAL SHEETS
04	SCL	101,237	45.2/45.8, 2.7/3.3	332	736

REGISTERED CIVIL ENGINEER — DATE: 6-13-18

PLANS APPROVAL DATE: 6-20-18

STEVE LOUPE No. 63575 Exp. 9/30/18 CIVIL — REGISTERED PROFESSIONAL ENGINEER — STATE OF CALIFORNIA

THE STATE OF CALIFORNIA OR ITS OFFICERS OR AGENTS SHALL NOT BE RESPONSIBLE FOR THE ACCURACY OR COMPLETENESS OF SCANNED COPIES OF THIS PLAN SHEET.

WMH CORPORATION
50 W San Fernando St
Suite 950
San Jose, CA 95113

VTA
3331 N First St
Building B
San Jose, Ca 95134

ROADSIDE SIGN QUANTITIES SUMMARY

SHEET No.	SIGN No.	SIGN CODE		SIGN PANEL SIZE	"C" DIM IN FEET	POST SIZE AND LENGTH					ROADSIDE SIGN (METAL POST)	ROADSIDE SIGN (WOOD POST)		INSTALL SIGN (SSBM)	REMOVE ROADSIDE SIGN (SSBM)	REMOVE ROADSIDE SIGN	INSTALL SIGN (MAST-ARM HANGER METHOD)	INSTALL ROADSIDE SIGN PANEL ON EXISTING POST	METAL (BARRIER MOUNTED SIGN)	REMARKS
						4" X 4"	4" X 6"	6" X 6"	6" X 8"	2" GALVANIZED PIPE	ONE POST	ONE POST	TWO POST							
		FEDERAL	CALIFORNIA	IN		FT						EA							LB	
S-1	S1-23		G92	48 x 30	2			14				1								
			G26-2 (101)	28 x 24																
		M3-3		24 x 12																
		M6-2a (Lt)		21 x 15																
	S1-24	Spec 1C		24 x 30													1			MOUNT TO MAST ARM
	S1-25	W1-1a (10) (Lt)		36 x 36	7					12	1									PER C.O.S. - 5E
	S1-26	R9-3													1					
		R9-3bP													1					
		D3-1													1					
		D3-1													1					
		D3-1													1					
	S1-27	Spec 1D		54 x 42	7		15					1								
	S1-28	R3-18		24 x 24													1			MOUNT TO MAST ARM
	S1-29		G8-13													1				
	S1-30		G92																	
			G26-2 (101)													1				
		M3-3																		
		M6-2a (Rt)																		
	S1-31	W11-2														1				
		W16-7P (Rt)																		
	S1-32		G92												1					
			G26-2 (101)												1					
		M3-3													1					
		M6-2a (Lt)													1					
	S1-33		W34C (14'-11")												1					
	S1-34	R5-10a		30 x 36	7	14						1								
	S1-35	R9-3		18 x 18	7	12						1								
	S1-36		R61-20.1 Mod	40 x 40	7					12	1									PER C.O.S. - 5E
	S1-37		R61-19	36 x 30	7	13						1								
	S1-38		R61-19	36 x 30	7	13						1								
	S1-39		R26/R81	12 x 18	7	12						1								PER C.O.S. - 4E-2
	S1-40		R26/R81	12 x 18	7									1						PER C.O.S. - 4E-2
	S1-41		R26/R81	12 x 18	7									1						PER C.O.S. - 4E-2
	S1-42	Spec 1A		48 x 42	7					15	1									PER C.O.S. - 5E
		D1-1		48 x 24																
	S1-43	W11-2		36 x 36	7	15						1								
		W16-7P (Rt)		24 x 12																
	S1-44		R100B													1				
	S1-45		R100B	24 x 24	7					11	1									PER C.O.S. - 5E
	S1-46		W34C (14'-11") (Rt)	36 x 54	7									1						MOUNT TO SIGNAL POLE
SUBTOTAL SQ-2											4	8		3	10	4	2			

SIGN QUANTITIES SQ-2

CALCULATED-DESIGNED BY: DIANNE A. GALVEZ
CHECKED BY: C. CHRES
REVISED BY: SCV
DATE REVISED: 05/03/18
CONSULTANT FUNCTIONAL SUPERVISOR: TIMOTHY J. LEE

STATE OF CALIFORNIA - DEPARTMENT OF TRANSPORTATION — Caltrans®

X:\237_101_Mathilde\000_CADSheets\OA-Signs\QC-Quantities\0413000204oc002.dgn

LAST REVISION: 01-15-18
DATE PLOTTED => 6/20/2018
TIME PLOTTED => 11:20:43 AM

BORDER LAST REVISED 7/2/2010 | USERNAME => Eilif | DGN FILE => 0413000204oc002.dgn | RELATIVE BORDER SCALE IS IN INCHES 0 1 2 3 | UNIT 0000 | PROJECT NUMBER & PHASE 0413000204

Dist	COUNTY	ROUTE	POST MILES TOTAL PROJECT	SHEET No.	TOTAL SHEETS
04	SCL	101,237	45.2/45.8, 2.7/3.3	333	736

REGISTERED CIVIL ENGINEER — DATE: 6-13-18

PLANS APPROVAL DATE: 6-20-18

REGISTERED PROFESSIONAL ENGINEER — STEVE LOUPE — No. 63575 — Exp. 9/30/18 — CIVIL — STATE OF CALIFORNIA

THE STATE OF CALIFORNIA OR ITS OFFICERS OR AGENTS SHALL NOT BE RESPONSIBLE FOR THE ACCURACY OR COMPLETENESS OF SCANNED COPIES OF THIS PLAN SHEET.

WMH CORPORATION
50 W San Fernando St
Suite 950
San Jose, CA 95113

VTA
3331 N First St
Building B
San Jose, Ca 95134

ROADSIDE SIGN QUANTITIES SUMMARY

SHEET No.	SIGN No.	SIGN CODE		SIGN PANEL SIZE	"C" DIM IN FEET	POST SIZE AND LENGTH					ROADSIDE SIGN (METAL POST)	ROADSIDE SIGN (WOOD POST)		INSTALL SIGN (SSBM)	REMOVE ROADSIDE SIGN (SSBM)	REMOVE ROADSIDE SIGN	INSTALL SIGN (MAST-ARM HANGER METHOD)	INSTALL ROADSIDE SIGN PANEL ON EXISTING POST	METAL (BARRIER MOUNTED SIGN)	REMARKS
						4" X 4"	4" X 6"	6" X 6"	6" X 8"	2" GALVANIZED PIPE	ONE POST	ONE POST	TWO POST							
		FEDERAL	CALIFORNIA	IN		FT						EA							LB	
S-1	S1-47		G92	48 x 30	2			14				1								
			G26-2 (101)	28 x 24																
		M3-3		24 x 12																
		M6-2a (Rt)		21 x 15																
	S1-48		R73-6	24 x 24													1			MOUNT TO MAST ARM
	S1-49		R91-1	36 x 54	7		16					1								
	S1-50		G8-1	66 x 30	5		17						1							
			G78-1	42 x 54																
	S1-51		Spec 1E	60 x 48	7		15						1							
	S1-52		R26													1				
			R61-17																	
	S1-53		Spec 1E	60 X 48	7		15						1							
	S1-54		R49 (Rt)	42 x 18														1		MOUNT TO PEDESTRIAN BARRICADE
	S1-55		R81	12 x 8	7									1						MOUNT TO SIGNAL POLE
			R81B	8 x 5										1						MOUNT TO SIGNAL POLE
	S1-56		R49 (Rt)	42 x 18														1		MOUNT TO PEDESTRIAN BARRICADE
	S1-57	R3-7														1				
	S1-58	R10-11a		36 x 48	7		16					1								
	S1-59	R10-6a		24 x 30	7	14						1								
		R3-7bP		24 x 12																
	S1-61		R73-6	24 x 24													1			MOUNT TO MAST ARM
	S1-63	R3-18		24 x 24													1			MOUNT TO MAST ARM
	S1-66	W3-8		36 x 36	7									1						
	S1-67	W3-7		36 x 36	7									1						
	S1-68	W3-7		36 x 36	7									1						
	S1-69	W3-8		36 x 36	7									1						
	S1-70	W3-8		36 x 36	7									1						
	S1-71	W3-7		36 x 36	7									1						
	S1-72	W3-7		36 x 36	7									1						
	S1-73	R5-10a		30 x 36	7	14						1								
	S1-74	R6-1 (Lt)		54 x 18	2	7						1								
S-2	S2-1	M3-2		24 x 12	5	13						1								
			G28-2 (237)	28 x 25																
		M6-3		21 x 15																
	S2-2	M3-2														1				
			G28-2 (237)																	
		M6-3																		
		M3-1																		
			G26-2 (101)																	
		M6-2 (Rt)																		
	S2-3		G85-5													1				
	S2-4		G8-4	42 x 24	7									1						
SUBTOTAL SQ-3												7	3	10		4	3	2		

SIGN QUANTITIES SQ-3

CALCULATED-DESIGNED BY	DIANNE A. GALVEZ
CHECKED BY	C. CHRES
CONSULTANT FUNCTIONAL SUPERVISOR	TIMOTHY J. LEE
REVISED BY	SCV
DATE REVISED	05/03/18

STATE OF CALIFORNIA - DEPARTMENT OF TRANSPORTATION — Caltrans®

X:\237_101_Mathilde\000_CADSheets\QA-Signs\QC-Quantities\0413000204oc003.dgn

LAST REVISION 01-15-18 — DATE PLOTTED => 6/20/2018 — TIME PLOTTED => 11:20:48 AM

BORDER LAST REVISED 7/2/2010 | USERNAME => Eilif | DGN FILE => 0413000204oc003.dgn | RELATIVE BORDER SCALE IS IN INCHES 0 1 2 3 | UNIT 0000 | PROJECT NUMBER & PHASE 0413000204

Dist	COUNTY	ROUTE	POST MILES TOTAL PROJECT	SHEET No.	TOTAL SHEETS
04	SCL	101,237	45.2/45.8, 2.7/3.3	334	736

REGISTERED CIVIL ENGINEER — 6-13-18 DATE

6-20-18
PLANS APPROVAL DATE

STEVE LOUPE No. 63575 Exp. 9/30/18 CIVIL — REGISTERED PROFESSIONAL ENGINEER — STATE OF CALIFORNIA

THE STATE OF CALIFORNIA OR ITS OFFICERS OR AGENTS SHALL NOT BE RESPONSIBLE FOR THE ACCURACY OR COMPLETENESS OF SCANNED COPIES OF THIS PLAN SHEET.

WMH CORPORATION
50 W San Fernando St
Suite 950
San Jose, CA 95113

VTA
3331 N First St
Building B
San Jose, Ca 95134

ROADSIDE SIGN QUANTITIES SUMMARY

SHEET No.	SIGN No.	SIGN CODE		SIGN PANEL SIZE	"C" DIM IN FEET	POST SIZE AND LENGTH					ROADSIDE SIGN (METAL POST)	ROADSIDE SIGN (WOOD POST)		INSTALL SIGN (SSBM)	REMOVE ROADSIDE SIGN (SSBM)	REMOVE ROADSIDE SIGN	INSTALL SIGN (MAST-ARM HANGER METHOD)	INSTALL ROADSIDE SIGN PANEL ON EXISTING POST	METAL (BARRIER MOUNTED SIGN)	REMARKS
						4" X 4"	4" X 6"	6" X 6"	6" X 8"	2" GALVANIZED PIPE	ONE POST	ONE POST	TWO POST							
		FEDERAL	CALIFORNIA	IN		FT									EA				LB	
S-2	S2-5		G92												1					
			G26-2 (101)												1					
		M3-1													1					
		M6-2a (Lt)													1					
	S2-6		G92	48 x 30	2									1						MOUNT TO SIGNAL POLE
			G26-2 (101)	28 x 24										1						
		M3-1		24 x 12										1						
		M6-1 (Rt)		21 x 15										1						
	S2-7	R4-7		24 x 30	7	13						1								
	S2-8		G92		2											1				
			G26-2 (101)																	
		M3-1																		
		M6-2a (Rt)																		
	S2-9		G92	48 x 30	2			14				1								
			G26-2 (101)	28 x 24																
		M3-1		24 x 12																
		M6-2a (Rt)		21 x 15																
	S2-10	W12-2 (14'-11")													1					
	S2-11	W12-2 (14'-11")		36 x 36	7	14						1								
	S2-12		R91-3													1				
	S2-13		R91-1	36 x 54	7														119	
	S2-14		R91-3													1				
	S2-15		R91-1	36 x 54	5		14					1								
	S2-16	R5-1		36 x 36	2		12					1								
		R5-1a		36 x 24																
	S2-17	R5-1		36 x 36	2		12					1								
		R5-1a		36 x 24																
	S2-18	R5-10c		24 x 12	7	12						1								
	S2-19	R5-10a		30 x 36	7	14						1								
	S2-20	R5-1													1					
		R5-1a													1					
		R6-1													1					
	S2-21	R5-1														1				
		R5-1a																		
		R6-1																		
	S2-22	R2-1 (45)													1					
	S2-23	R2-1 (45)													1					
		R5-10c													1					
	S2-24	R2-1 (40)		30 x 36	7									1						
		R2-1 (40)		30 x 36										1						
SUBTOTAL SQ-4												8		6	11	4			119	

SIGN QUANTITIES SQ-4

LAST REVISION 01-15-18 | DATE PLOTTED => 6/20/2018 | TIME PLOTTED => 11:20:52 AM

CALCULATED-DESIGNED BY: DIANNE A. GALVEZ | CHECKED BY: C. CHRES | REVISED BY: SCV | DATE REVISED: 05/03/18

CONSULTANT FUNCTIONAL SUPERVISOR: TIMOTHY J. LEE

STATE OF CALIFORNIA - DEPARTMENT OF TRANSPORTATION

X:\237_101_Mathilda\000_CAD\Sheets\OA-Signs\QC-Quantities\0413000204oc004.dgn

BORDER LAST REVISED 7/2/2010 | USERNAME => Eilif | DGN FILE => 0413000204oc004.dgn | RELATIVE BORDER SCALE IS IN INCHES 0 1 2 3 | UNIT 0000 | PROJECT NUMBER & PHASE 0413000204

Dist	COUNTY	ROUTE	POST MILES TOTAL PROJECT	SHEET No.	TOTAL SHEETS
04	SCL	101,237	45.2/45.8, 2.7/3.3	335	736

REGISTERED CIVIL ENGINEER — 6-13-18 DATE

6-20-18
PLANS APPROVAL DATE

STEVE LOUPE No. 63575 Exp. 9/30/18 CIVIL — REGISTERED PROFESSIONAL ENGINEER — STATE OF CALIFORNIA

THE STATE OF CALIFORNIA OR ITS OFFICERS OR AGENTS SHALL NOT BE RESPONSIBLE FOR THE ACCURACY OR COMPLETENESS OF SCANNED COPIES OF THIS PLAN SHEET.

WMH CORPORATION
50 W San Fernando St
Suite 950
San Jose, CA 95113

VTA
3331 N First St
Building B
San Jose, Ca 95134

ROADSIDE SIGN QUANTITIES SUMMARY

SHEET No.	SIGN No.	SIGN CODE		SIGN PANEL SIZE	"C" DIM IN FEET	POST SIZE AND LENGTH					ROADSIDE SIGN (METAL POST)	ROADSIDE SIGN (WOOD POST)		INSTALL SIGN (SSBM)	REMOVE ROADSIDE SIGN (SSBM)	REMOVE ROADSIDE SIGN	INSTALL SIGN (MAST-ARM HANGER METHOD)	INSTALL ROADSIDE SIGN PANEL ON EXISTING POST	METAL (BARRIER MOUNTED SIGN)	REMARKS
						4" X 4"	4" X 6"	6" X 6"	6" X 8"	2" GALVANIZED PIPE	ONE POST	ONE POST	TWO POST							
		FEDERAL	CALIFORNIA	IN		FT								EA					LB	
S-2	S2-25	Spec													1					
	S2-26	Spec 2A		36 x 24	7	13						1								
	S2-27	R5-1																		
		R5-1a														1				
		W4-3																		
	S2-28	R5-1																		
		R5-1a														1				
	S2-29	E5-1														1				
	S2-30		G8-4	36 x 24	7									1						
	S2-31		G85-5													1				
	S2-32		W34C (15'-2") (Rt)												1					
	S2-33		W34C (15'-2") (Rt)	36 x 54	7									1						
	S2-34		W74-1 (Rt)													1				
	S2-35		R13A	24 x 36	7	14						1								
	S2-36		R26/R81	12 x 18	7									1						PER C.O.S. - 4E-2; MOUNT TO SIGNAL POLE
	S2-37	Spec 2B		48 x 42	7					13	1									PER C.O.S. - 5E
	S2-38		G77-4	84 x 54	7		16						1							MOUNT TO SIGNAL POLE
	S2-39		G92	48 x 30	2			14				1								
			G26-2 (101)	28 x 24																
		M3-1		24 x 12																
		M6-2a (Lt)		21 x 15																
	S2-40		R73-6	24 x 24													1			MOUNT TO MAST ARM
	S2-42		R13A	24 x 36	7					12	1									PER C.O.S. - 5E
	S2-43	R2-1 (40)		30 x 36	7	14						1								
	S2-44	R2-1 (40)		30 x 36	7					12	1									PER C.O.S. - 5E
	S2-45		INSTALL BUS STOP SIGN (BY OTHERS)								1									PER C.O.S. - 5E
	S2-47		R73-3	24 x 24													1			MOUNT TO MAST ARM
	S2-48		R49 (Rt)	42 x 18														1		MOUNT TO PEDESTRIAN BARRICADE
	S2-50		R49 (Lt)	42 x 18														1		MOUNT TO PEDESTRIAN BARRICADE
	S2-51	R3-18		24 x 24													1			MOUNT TO MAST ARM
	S2-52	R10-6 (Lt)													1					
			R89												1					
	S2-53	R10-6 (Lt)		24 x 36										1						MOUNT TO SIGNAL POLE
			R89	24 x 6										1						
SUBTOTAL SQ-5											4	4	1	5	4	5	3	2		

SIGN QUANTITIES SQ-5

CALCULATED-DESIGNED BY	DIANNE A. GALVEZ	REVISED BY	SCV	
CHECKED BY	C. CHRES	DATE REVISED	05/03/18	
CONSULTANT FUNCTIONAL SUPERVISOR	TIMOTHY J. LEE			

STATE OF CALIFORNIA - DEPARTMENT OF TRANSPORTATION — Caltrans®

X:\237_101_Mathilde\000_CAD\Sheets\OA-Signs\OC-Quantities\0413000204oc005.dgn

LAST REVISION: 01-15-18 | DATE PLOTTED => 6/20/2018 | TIME PLOTTED => 11:20:55 AM

BORDER LAST REVISED 7/2/2010 | USERNAME => Eilif | DGN FILE => 0413000204oc005.dgn | RELATIVE BORDER SCALE IS IN INCHES 0 1 2 3 | UNIT 0000 | PROJECT NUMBER & PHASE 0413000204

Dist	COUNTY	ROUTE	POST MILES TOTAL PROJECT	SHEET No.	TOTAL SHEETS
04	SCL	101,237	45.2/45.8, 2.7/3.3	336	736

REGISTERED CIVIL ENGINEER — DATE: 6-13-18

PLANS APPROVAL DATE: 6-20-18

REGISTERED PROFESSIONAL ENGINEER — STEVE LOUPE — No. 63575 — Exp. 9/30/18 — CIVIL — STATE OF CALIFORNIA

THE STATE OF CALIFORNIA OR ITS OFFICERS OR AGENTS SHALL NOT BE RESPONSIBLE FOR THE ACCURACY OR COMPLETENESS OF SCANNED COPIES OF THIS PLAN SHEET.

WMH CORPORATION
50 W San Fernando St
Suite 950
San Jose, CA 95113

VTA
3331 N First St
Building B
San Jose, Ca 95134

ROADSIDE SIGN QUANTITIES SUMMARY

SHEET No.	SIGN No.	SIGN CODE		SIGN PANEL SIZE	"C" DIM IN FEET	POST SIZE AND LENGTH					ROADSIDE SIGN (METAL POST)	ROADSIDE SIGN (WOOD POST)		INSTALL SIGN (SSBM)	REMOVE ROADSIDE SIGN (SSBM)	REMOVE ROADSIDE SIGN	INSTALL SIGN (MAST-ARM HANGER METHOD)	INSTALL ROADSIDE SIGN PANEL ON EXISTING POST	METAL (BARRIER MOUNTED SIGN)	REMARKS
						4" X 4"	4" X 6"	6" X 6"	6" X 8"	2" GALVANIZED PIPE	ONE POST	ONE POST	TWO POST							
		FEDERAL	CALIFORNIA	IN		FT								EA					LB	
S-2	S2-54	W3-8		36 x 36	7									1						
	S2-55	W3-8		36 x 36	7									1						
	S2-56	W3-7		36 x 36	7									1						
	S2-57	W3-7		36 x 36	7									1						
	S2-58	R6-1 (Lt)		54 x 18	2	7						1								
S-3	S3-1	R10-12		30 x 36													1			MOUNT TO MAST ARM
	S3-2		G85-6													1				
	S3-3	R10-7													1					
	S3-4	R10-7		24 x 30	7									1						MOUNT TO SIGNAL POLE
	S3-5	R10-7														1				
	S3-6		G77-4													1				
	S3-7		G92	48 x 30	2			14				1								
			G28-2 (237)	28 x 25																
		M3-2		24 x 12																
		M6-2a (Lt)		21 x 15																
	S3-8	R3-7														1				
	S3-9	R2-1 (45)													1					
	S3-10	R3-18														1				
			R73-2																	
	S3-11	W12-2 (14'-11")													1					
			W34A (350 Ft)												1					
	S3-12	W12-2 (14'-11")		36 x 36	7									1						
			W34A (350 Ft)	36 X 30										1						
	S3-13		G92																	
			G28-2 (237)													1				
		M3-2																		
		M6-2a (Lt)																		
	S3-14		G92																	
			G28-2 (237)													1				
		M3-2																		
		M6-2 (Rt)																		
	S3-15		R61-11	36 x 30	7	13						1								
	S3-16		G28-2 (237)													1				
		M3-4																		
		M6-1 (Lt)																		
	S3-17	R10-7													1					
	S3-18	W12-2 (14'-11")													1					
	S3-19	W12-2 (14'-11")		36 x 36	7									1						MOUNT TO SIGNAL POLE
	S3-20		G92	48 x 30	2			14				1								
			G28-2 (237)	28 x 25																
		M3-2		24 x 12																
		M6-2a (Rt)		21 x 15																
	S3-21		G8-1													1				
SUBTOTAL SQ-6												4		8	6	9	1			

SIGN QUANTITIES SQ-6

STATE OF CALIFORNIA - DEPARTMENT OF TRANSPORTATION — Caltrans

CONSULTANT FUNCTIONAL SUPERVISOR: TIMOTHY J. LEE

CALCULATED-DESIGNED BY: DIANNE A. GALVEZ
CHECKED BY: C. CHRES
REVISED BY: SCV
DATE REVISED: 05/03/18

LAST REVISION: 01-15-18
DATE PLOTTED => 6/20/2018
TIME PLOTTED => 11:21:00 AM

X:\237_101_Morrindo\000_CAD\Sheets\0A-Signs\OC-Quantities\0413000204oc006.dgn

BORDER LAST REVISED 7/2/2010 | USERNAME => Eilif | DGN FILE => 0413000204oc006.dgn | RELATIVE BORDER SCALE IS IN INCHES 0 1 2 3 | UNIT 0000 | PROJECT NUMBER & PHASE 0413000204

Dist	COUNTY	ROUTE	POST MILES TOTAL PROJECT	SHEET No.	TOTAL SHEETS
04	SCL	101,237	45.2/45.8, 2.7/3.3	337	736

REGISTERED CIVIL ENGINEER — 6-13-18 DATE

6-20-18
PLANS APPROVAL DATE

REGISTERED PROFESSIONAL ENGINEER — STEVE LOUPE — No. 63575 — Exp. 9/30/18 — CIVIL — STATE OF CALIFORNIA

THE STATE OF CALIFORNIA OR ITS OFFICERS OR AGENTS SHALL NOT BE RESPONSIBLE FOR THE ACCURACY OR COMPLETENESS OF SCANNED COPIES OF THIS PLAN SHEET.

WMH CORPORATION
50 W San Fernando St
Suite 950
San Jose, CA 95113

VTA
3331 N First St
Building B
San Jose, Ca 95134

ROADSIDE SIGN QUANTITIES SUMMARY

SHEET No.	SIGN No.	SIGN CODE		SIGN PANEL SIZE	"C" DIM IN FEET	POST SIZE AND LENGTH					ROADSIDE SIGN (METAL POST)	ROADSIDE SIGN (WOOD POST)		INSTALL SIGN (SSBM)	REMOVE ROADSIDE SIGN (SSBM)	REMOVE ROADSIDE SIGN	INSTALL SIGN (MAST-ARM HANGER METHOD)	INSTALL ROADSIDE SIGN PANEL ON EXISTING POST	METAL (BARRIER MOUNTED SIGN)	REMARKS
						4" X 4"	4" X 6"	6" X 6"	6" X 8"	2" GALVANIZED PIPE	ONE POST	ONE POST	TWO POST							
		FEDERAL	CALIFORNIA	IN		FT						EA							LB	
S-3	S3-22		R49 (Rt)	42 x 18														1		MOUNT TO PEDESTRIAN BARRICADE
	S3-23	R10-11		36 x 48	7		16					1								
	S3-24	R3-5														1				
		R3-18																		
	S3-25	R3-1														1				
	S3-26	R6-1 (Lt)														1				
		R6-1 (Rt)																		
	S3-27	R3-1													1					
		Spec													1					
	S3-28	R6-1 (Lt)		54 x 18	2	7						1								
		R6-1 (Rt)		54 x 18																
	S3-29	R1-2														1				
	S3-30		G8-1													1				
			G8-1																	
	S3-31		G8-1	66 x 30	7	13							1							
	S3-32		W34C (14'-8")													1				
	S3-33		W34C (14'-8") (Lt)	36 x 54	7		16					1								
	S3-34	R2-1 (40)														1				
	S3-35		G26-2 (101)													1				
		M6-1 (Lt)																		
	S3-36		G26-2 (101)	28 x 24	7														112	
		M6-1 (Lt)		21 x 15																
	S3-37		R26(S)												1					
	S3-38	D1-1													1					
		Spec													1					
	S3-39	D1-1		66 x 24	7	13							1							
	S3-40	R6-1 (Rt)														1				
	S3-41	R2-1 (45)													1					
	S3-42	R2-1 (40)		30 x 36	7					12	1									PER C.O.S. - 5E
	S3-43	R5-1																		
		R5-1a														1				
		R6-1 (Lt)																		
		R1-2																		
	S3-44	R10-7													1					
		R5-1													1					
		R5-1a													1					
		R6-1 (Lt)													1					
		R6-1 (Rt)													1					
	S3-45	R5-1														1				
		R5-1a																		
	S3-46	R6-1 (Lt)		54 x 18	2	7						1								
SUBTOTAL SQ-7											1	4	2		11	11		1	112	

SIGN QUANTITIES SQ-7

CALCULATED-DESIGNED BY	DIANNE A. GALVEZ	REVISED BY	SCV	
CHECKED BY	C. CHRES	DATE REVISED	05/03/18	
SUPERVISOR	TIMOTHY J. LEE	CONSULTANT FUNCTIONAL		

STATE OF CALIFORNIA - DEPARTMENT OF TRANSPORTATION — Caltrans

X:\237_101_Mathilde\000_CAD\Sheets\QA-Signs\QC-Quantities\0413000204qc007.dgn

LAST REVISION 01-15-18 — DATE PLOTTED => 6/20/2018 — TIME PLOTTED => 11:21:04 AM

BORDER LAST REVISED 7/2/2010 | USERNAME => Eilif | DGN FILE => 0413000204qc007.dgn | RELATIVE BORDER SCALE IS IN INCHES 0 1 2 3 | UNIT 0000 | PROJECT NUMBER & PHASE 0413000204

Dist	COUNTY	ROUTE	POST MILES TOTAL PROJECT	SHEET No.	TOTAL SHEETS
04	SCL	101,237	45.2/45.8, 2.7/3.3	338	736

6-13-18
REGISTERED CIVIL ENGINEER — DATE

6-20-18
PLANS APPROVAL DATE

REGISTERED PROFESSIONAL ENGINEER — STEVE LOUPE — No. 63575 — Exp. 9/30/18 — CIVIL — STATE OF CALIFORNIA

THE STATE OF CALIFORNIA OR ITS OFFICERS OR AGENTS SHALL NOT BE RESPONSIBLE FOR THE ACCURACY OR COMPLETENESS OF SCANNED COPIES OF THIS PLAN SHEET.

WMH CORPORATION
50 W San Fernando St
Suite 950
San Jose, CA 95113

VTA
3331 N First St
Building B
San Jose, Ca 95134

ROADSIDE SIGN QUANTITIES SUMMARY

SHEET No.	SIGN No.	SIGN CODE		SIGN PANEL SIZE	"C" DIM IN FEET	POST SIZE AND LENGTH					ROADSIDE SIGN (METAL POST)	ROADSIDE SIGN (WOOD POST)		INSTALL SIGN (SSBM)	REMOVE ROADSIDE SIGN (SSBM)	REMOVE ROADSIDE SIGN	INSTALL SIGN (MAST-ARM HANGER METHOD)	INSTALL ROADSIDE SIGN PANEL ON EXISTING POST	METAL (BARRIER MOUNTED SIGN)	REMARKS
						4" X 4"	4" X 6"	6" X 6"	6" X 8"	2" GALVANIZED PIPE	ONE POST	ONE POST	TWO POST							
		FEDERAL	CALIFORNIA	IN		FT						EA							LB	
S-3	S3-47	R6-1 (L†)		54 x 18	2	7						1								
		R6-1 (R†)		54 x 18																
	S3-48	R6-1 (R†)														1				
		R6-1 (L†)																		
	S3-49		G77-4	72 x 54	7		16						1							
	S3-50		G77-4													1				
			G8-13																	
	S3-51		R61-11	54 x 45	7		15					1								
	S3-52	Spec														1				
	S3-53	R1-2														1				
	S3-54		W34C (14'-8") (R†)	36 x 54	7		16					1								
	S3-55	R3-18														1				
			G26-2 (101)																	
		M3-1																		
		M5-1 (L†)																		
	S3-56		G92	48 x 30	2			14				1								
			G28-2 (237)	28 x 25																
		M3-4		24 x 12																
		M6-1 (L†)		21 x 15																
	S3-57		G92												1					
			G28-2 (237)												1					
		M3-4													1					
		M6-2a (L†)													1					
	S3-58	R1-2														1				
		R1-2																		
	S3-59		W34C (14'-8")													1				
	S3-60	R10-7													1					
		R9-3													1					
		R9-3a													1					
		R3-1													1					
	S3-61		G8-13													1				
	S3-62	D3-1 (ROSS Dr)		24 x 6	7					10	1									PER C.O.S. - 5E
		D3-1 (PERSIAN Dr)		24 x 6																
	S3-63	R9-3 Mod														1				
	S3-64	R10-7													1					
	S3-65		G8-13	72 x 36	7	14							1							
	S3-66	R9-3		18 x 18	7	12						1								
	S3-67	Spec 3B		84 x 48	7		16						1							
	S3-68	R10-15		30 x 30	7	13						1								
SUBTOTAL SQ-8											1	6	3		9	9				

SIGN QUANTITIES SQ-8

STATE OF CALIFORNIA - DEPARTMENT OF TRANSPORTATION
Caltrans®
CONSULTANT FUNCTIONAL SUPERVISOR: TIMOTHY J. LEE
CALCULATED-DESIGNED BY: DIANNE A. GALVEZ
CHECKED BY: C. CHRES
REVISED BY: SCV
DATE REVISED: 05/03/18

X:\237_101_Mathilde\000_CAD\Sheets\QA-Signs\QC-Quantities\0413000204oc008.dgn

LAST REVISION 01-15-18 DATE PLOTTED => 6/20/2018 TIME PLOTTED => 11:21:08 AM

BORDER LAST REVISED 7/2/2010 | USERNAME => Eilif DGN FILE => 0413000204oc008.dgn | RELATIVE BORDER SCALE IS IN INCHES 0 1 2 3 | UNIT 0000 | PROJECT NUMBER & PHASE 0413000204

Dist	COUNTY	ROUTE	POST MILES TOTAL PROJECT	SHEET No.	TOTAL SHEETS
04	SCL	101,237	45.2/45.8, 2.7/3.3	339	736

6-13-18
REGISTERED CIVIL ENGINEER DATE

6-20-18
PLANS APPROVAL DATE

REGISTERED PROFESSIONAL ENGINEER
STEVE LOUPE
No. 63575
Exp. 9/30/18
CIVIL
STATE OF CALIFORNIA

THE STATE OF CALIFORNIA OR ITS OFFICERS OR AGENTS SHALL NOT BE RESPONSIBLE FOR THE ACCURACY OR COMPLETENESS OF SCANNED COPIES OF THIS PLAN SHEET.

WMH CORPORATION
50 W San Fernando St
Suite 950
San Jose, CA 95113

VTA
3331 N First St
Building B
San Jose, Ca 95134

ROADSIDE SIGN QUANTITIES SUMMARY

SHEET No.	SIGN No.	SIGN CODE		SIGN PANEL SIZE	"C" DIM IN FEET	POST SIZE AND LENGTH					ROADSIDE SIGN (METAL POST)	ROADSIDE SIGN (WOOD POST)		INSTALL SIGN (SSBM)	REMOVE ROADSIDE SIGN (SSBM)	REMOVE ROADSIDE SIGN	INSTALL SIGN (MAST-ARM HANGER METHOD)	INSTALL ROADSIDE SIGN PANEL ON EXISTING POST	METAL (BARRIER MOUNTED SIGN)	REMARKS
						4" X 4"	4" X 6"	6" X 6"	6" X 8"	2" GALVANIZED PIPE	ONE POST	ONE POST	TWO POST							
		FEDERAL	CALIFORNIA	IN		FT					EA								LB	
S-3	S3-69	R1-1														1				
		W4-4P																		
	S3-70	R1-1		30 x 30	7					13	1									PER C.O.S. - 5E
		W4-4P		24 x 12																
	S3-71	R10-15		30 x 30	7									1						MOUNT TO SIGNAL POLE
	S3-72	W11-2		30 x 30	7					13	1									PER C.O.S. - 5E
		W16-7P (Lt)		24 x 12																
	S3-73	W11-2		30 x 30	7	14						1								
		W16-7P (Rt)		24 x 12																
	S3-74	W11-2		30 x 30	7	14						1								
		W16-7P (Lt)		24 x 12																
	S3-75	W11-2		30 x 30	7					13	1									PER C.O.S. - 5E
		W16-7P (Lt)		24 x 12																
	S3-76		R49 (Lt)	42 x 18														1		MOUNT TO PEDESTRIAN BARRICADE
	S3-78	R9-3		18 x 18	7	12						1								
	S3-79		R73-2	24 x 24													1			MOUNT TO MAST ARM
	S3-80		Spec 3A	78 x 48	7		16						1							
	S3-81	W4-2														1				
	S3-82	R5-10c		24 x 12	7	12						1								
	S3-83	R5-1		36 x 36	2		12					1								
		R5-1a		36 x 24																
	S3-84	W11-15		36 x 36	7					12	1									PER C.O.S. - 5E
	S3-85	R4-7		24 x 30	7	13						1								
	S3-86	R10-11		36 x 48	7		16					1								
	S3-87	W11-15		36 x 36	7	14						1								
	S3-88	R1-5 (Lt)		36 x 36	7	14						1								
	S3-89		R26/R81	12 x 18	7									1						PER C.O.S. - 4E-2
	S3-90	W11-15		36 x 36	7		16					1								
		W16-5P (Rt)		24 x 18																
	S3-91	R1-5 (Lt)		36 x 36	7					14	1									PER C.O.S. - 5E
		R9-3		18 x 18																
	S3-93		R61-1	30 x 30													1			MOUNT TO MAST ARM
	S3-94		R73-5	24 x 24													1			MOUNT TO MAST ARM
	S3-96	D3-1														1				
		D3-1																		
	S3-98		R61-11	36 x 30													1			MOUNT TO MAST ARM
	S3-99		G92	48 x 30	2			14				1								
			G28-2 (237)	28 x 25																
		M3-2		24 x 12																
		M6-2a (Lt)		21 x 15																
SUBTOTAL SQ-9											5	11	1	2		3	4	1		

SIGN QUANTITIES SQ-9

STATE OF CALIFORNIA - DEPARTMENT OF TRANSPORTATION
Caltrans
CONSULTANT FUNCTIONAL SUPERVISOR: TIMOTHY J. LEE
CALCULATED-DESIGNED BY: DIANNE A. GALVEZ
CHECKED BY: C. CHRES
REVISED BY: SCV
DATE REVISED: 05/03/18
LAST REVISION: 01-15-18
DATE PLOTTED => 6/20/2018
TIME PLOTTED => 11:21:12 AM
X:\237_101_Mathilde\000_CAD\Sheets\0A-Signs\OC-Quantities\0413000204oc009.dgn

BORDER LAST REVISED 7/2/2010 | USERNAME => Eilif | DGN FILE => 0413000204oc009.dgn | RELATIVE BORDER SCALE IS IN INCHES 0 1 2 3 | UNIT 0000 | PROJECT NUMBER & PHASE 0413000204

Dist	COUNTY	ROUTE	POST MILES TOTAL PROJECT	SHEET No.	TOTAL SHEETS
04	SCL	101,237	45.2/45.8, 2.7/3.3	340	736

REGISTERED CIVIL ENGINEER — 6-13-18 DATE

6-20-18
PLANS APPROVAL DATE

REGISTERED PROFESSIONAL ENGINEER — STEVE LOUPE — No. 63575 — Exp. 9/30/18 — CIVIL — STATE OF CALIFORNIA

THE STATE OF CALIFORNIA OR ITS OFFICERS OR AGENTS SHALL NOT BE RESPONSIBLE FOR THE ACCURACY OR COMPLETENESS OF SCANNED COPIES OF THIS PLAN SHEET.

WMH CORPORATION
50 W San Fernando St
Suite 950
San Jose, CA 95113

VTA
3331 N First St
Building B
San Jose, Ca 95134

ROADSIDE SIGN QUANTITIES SUMMARY

SHEET No.	SIGN No.	SIGN CODE		SIGN PANEL SIZE	"C" DIM IN FEET	POST SIZE AND LENGTH					ROADSIDE SIGN (METAL POST)	ROADSIDE SIGN (WOOD POST)		INSTALL SIGN (SSBM)	REMOVE ROADSIDE SIGN (SSBM)	REMOVE ROADSIDE SIGN	INSTALL SIGN (MAST-ARM HANGER METHOD)	INSTALL ROADSIDE SIGN PANEL ON EXISTING POST	METAL (BARRIER MOUNTED SIGN)	REMARKS
						4" X 4"	4" X 6"	6" X 6"	6" X 8"	2" GALVANIZED PIPE	ONE POST	ONE POST	TWO POST							
		FEDERAL	CALIFORNIA	IN		FT						EA							LB	
	S3-100		G92	48 x 30	2			14				1								
			G28-2 (237)	28 x 25																
		M3-2		24 x 12																
		M6-2a (Rt)		21 x 15																
	S3-103	R10-12		30 x 36													1			MOUNT TO MAST ARM
	S3-106		R61-13	48 x 30													1			MOUNT TO MAST ARM
	S3-107		R49 (Rt)	42 x 18														1		MOUNT TO PEDESTRIAN BARRICADE
	S3-108		R73-2	24 x 24													1			MOUNT TO MAST ARM
	S3-110		R49 (Lt)	42 x 18														1		MOUNT TO PEDESTRIAN BARRICADE
	S3-111	R3-18		24 x 24													1			MOUNT TO MAST ARM
	S3-112		G28-2 (237)	28 x 25	2	10						1								
		M3-4		24 x 12																
		M5-3 Mod		21 x 15																
	S3-113		G28-2 (237)	28 x 25	2	10						1								
		M3-2		24 x 12																
		M6-1 (Lt)		21 x 15																
	S3-114		G28-2 (237)	28 x 25	2	10						1								
		M3-4		24 x 12																
		M5-3 Mod		21 x 15																
S-3	S3-116	R3-18		24 x 24													1			MOUNT TO MAST ARM
	S3-117		R26													1				
	S3-118		R26	12 x 18	7					11	1									PER C.O.S. - 5E
	S3-119		R26												1					
	S3-120	W3-7		36 x 36	7									1						
	S3-121	W3-8		36 x 36	7									1						
	S3-122	W3-8		36 x 36	7									1						
	S3-123	R10-15 (Rt)		30 x 30	7														108	
	S3-124	R5-1		36 x 36	2		12					1								
		R5-1a		36 x 24																
	S3-125	R5-10a		30 x 36	7	14						1								
	S3-126	R3-1		36 x 36	7	14						1								
	S3-127		W4-10 (10)													1				
	S3-128	R3-18		24 x 24	7	13						1								
			R73-2	24 x 24																
	S3-129	R5-1		36 x 36	2		12					1								
		R5-1a		36 x 24																
	S3-130	R5-1		36 x 36	2		12					1								
		R5-1a		36 x 24																
	S3-131	R3-1		36 x 36	7	14						1								
	S3-132	R5-10c														1				
	S3-133	R5-10c		24 x 12	7	12						1								
SUBTOTAL SQ-10											1	12		3	1	3	5	2	108	

SIGN QUANTITIES SQ-10

REVISED BY	SCV				
DATE REVISED	05/03/18				
DIANNE A. GALVEZ	C. CHRES	TIMOTHY J. LEE			
CALCULATED-DESIGNED BY	CHECKED BY	CONSULTANT FUNCTIONAL SUPERVISOR			

STATE OF CALIFORNIA - DEPARTMENT OF TRANSPORTATION
Caltrans

LAST REVISION 01-15-18
DATE PLOTTED => 6/20/2018
TIME PLOTTED => 11:21:16 AM

X:\237_101_Mathilda\000_CAD\Sheets\04-Signs\OC-Quantities\0413000204oc010.dgn

BORDER LAST REVISED 7/2/2010 | USERNAME => Eilif | DGN FILE => 0413000204oc010.dgn | RELATIVE BORDER SCALE IS IN INCHES 0 1 2 3 | UNIT 0000 | PROJECT NUMBER & PHASE 0413000204

Dist	COUNTY	ROUTE	POST MILES TOTAL PROJECT	SHEET No.	TOTAL SHEETS
04	SCL	101,237	45.2/45.8, 2.7/3.3	341	736

REGISTERED CIVIL ENGINEER — 6-13-18 DATE

6-20-18
PLANS APPROVAL DATE

STEVE LOUPE No. 63575 Exp. 9/30/18 CIVIL — REGISTERED PROFESSIONAL ENGINEER — STATE OF CALIFORNIA

THE STATE OF CALIFORNIA OR ITS OFFICERS OR AGENTS SHALL NOT BE RESPONSIBLE FOR THE ACCURACY OR COMPLETENESS OF SCANNED COPIES OF THIS PLAN SHEET.

WMH CORPORATION
50 W San Fernando St
Suite 950
San Jose, CA 95113

VTA
3331 N First St
Building B
San Jose, Ca 95134

ROADSIDE SIGN QUANTITIES SUMMARY

SHEET No.	SIGN No.	SIGN CODE		SIGN PANEL SIZE	"C" DIM IN FEET	POST SIZE AND LENGTH					ROADSIDE SIGN (METAL POST)	ROADSIDE SIGN (WOOD POST)		INSTALL SIGN (SSBM)	REMOVE ROADSIDE SIGN (SSBM)	REMOVE ROADSIDE SIGN	INSTALL SIGN (MAST-ARM HANGER METHOD)	INSTALL ROADSIDE SIGN PANEL ON EXISTING POST	METAL (BARRIER MOUNTED SIGN)	REMARKS
						4" X 4"	4" X 6"	6" X 6"	6" X 8"	2" GALVANIZED PIPE	ONE POST	ONE POST	TWO POST							
		FEDERAL	CALIFORNIA	IN		FT								EA					LB	
S-3	S3-134		R73-2	24 x 24													1			MOUNT ON MAST ARM
	S3-135		G92																	
			G28-2 (237)																	
		M3-4																		
		M6-2a (Rt)																		
	S3-136		G92	48 x 30	2			14				1								
			G28-2 (237)	28 x 25																
		M3-4		24 x 12																
		M6-2a (Rt)		21 x 15																
	S3-137		G77-4													1				
S-4	S4-1	R3-7 (Lt)													1					
		W10-1													1					
			W48 (2)												1					
	S4-2	D1-1													1					
		R6-1													1					
	S4-3	R3-4													1					
		W10-3													1					
		Spec													1					
	S4-4	Spec														1				
	S4-5	Spec														1				
	S4-6	R3-7 (Rt)		36 x 36	7					14	1									PER C.O.S. - 5E/ PER C.O.S. - 4E-2
			R26/R81	12 x 18																
	S4-7		R26/R81	12 x 18	7					11	1									PER C.O.S. - 4E-2
	S4-8		R26/R81													1				
	S4-9		W74	36 x 36	7					14	1									PER C.O.S. - 5E/ PER C.O.S. - 4E-2
			R26/R81	12 x 18																
	S4-10	Spec														1				
	S4-11		R61-15 Mod	48 x 30	7	13						1								
	S4-12	W3-3		30 x 30	7									1						
		W16-9P		24 x 12										1						
	S4-13		R73-3	24 x 24													1			
	S4-15	R3-4		24 x 24													1			
	S4-17		R73-3	24 x 24													1			
	S4-19	R3-4		24 x 24													1			
	S4-20	R1-1														1				
	S4-22	W3-3		30 x 30	7									1						
		W16-9P		24 x 12										1						
S-5	S5-1	W1-1a (30)														1				
	S5-2	W1-1a (30) (Rt)		48 x 48	7		16					1								
S-6	S6-1	E5-1														1				
	S6-2	E5-1a (396A)		126 x 60	7			17					1							
	S6-3		R18A (Rt)	66 x 48	7	15							1							
	S6-4		W34C (14'-11")													1				
SUBTOTAL SQ-11											3	3	2	4	8	9	5			

SIGN QUANTITIES SQ-11

DIANNE A. GALVEZ	C. CHRES	SCV	05/03/18	CALCULATED-DESIGNED BY	REVISED BY
CHECKED BY	DATE REVISED				

CONSULTANT FUNCTIONAL SUPERVISOR: TIMOTHY J. LEE

STATE OF CALIFORNIA - DEPARTMENT OF TRANSPORTATION

Caltrans®

X:\237_101_Mathilde\000_CADSheets\QA-Signs\QC-Quantities\0413000204oc011.dgn

LAST REVISION 01-15-18 | DATE PLOTTED => 6/20/2018 | TIME PLOTTED => 11:21:23 AM

BORDER LAST REVISED 7/2/2010 | USERNAME => Eilif | DGN FILE => 0413000204oc011.dgn | RELATIVE BORDER SCALE IS IN INCHES 0 1 2 3 | UNIT 0000 | PROJECT NUMBER & PHASE 0413000204

Dist	COUNTY	ROUTE	POST MILES TOTAL PROJECT	SHEET No.	TOTAL SHEETS
04	SCL	101,237	45.2/45.8, 2.7/3.3	342	736

REGISTERED CIVIL ENGINEER — 6-13-18 DATE

6-20-18
PLANS APPROVAL DATE

REGISTERED PROFESSIONAL ENGINEER — STEVE LOUPE — No. 63575 — Exp. 9/30/18 — CIVIL — STATE OF CALIFORNIA

THE STATE OF CALIFORNIA OR ITS OFFICERS OR AGENTS SHALL NOT BE RESPONSIBLE FOR THE ACCURACY OR COMPLETENESS OF SCANNED COPIES OF THIS PLAN SHEET.

WMH CORPORATION
50 W San Fernando St
Suite 950
San Jose, CA 95113

VTA
3331 N First St
Building B
San Jose, Ca 95134

ROADSIDE SIGN QUANTITIES SUMMARY

SHEET No.	SIGN No.	SIGN CODE		SIGN PANEL SIZE	"C" DIM IN FEET	POST SIZE AND LENGTH					ROADSIDE SIGN (METAL POST)	ROADSIDE SIGN (WOOD POST)		INSTALL SIGN (SSBM)	REMOVE ROADSIDE SIGN (SSBM)	REMOVE ROADSIDE SIGN	INSTALL SIGN (MAST-ARM HANGER METHOD)	INSTALL ROADSIDE SIGN PANEL ON EXISTING POST	METAL (BARRIER MOUNTED SIGN)	REMARKS
						4" X 4"	4" X 6"	6" X 6"	6" X 8"	2" GALVANIZED PIPE	ONE POST	ONE POST	TWO POST							
		FEDERAL	CALIFORNIA	IN		FT						EA							LB	
S-6	S6-5		G86-1													1				
	S6-6		W34C (14'-11")	48 x 72	7			18				1								
	S6-7	W1-3 (Lt)														1				
		W13-1P (20)																		
	S6-8	W1-3 (Lt)		30 x 30	7					13	1									PER C.O.S. - 5E
		W13-1P (20)		18 x 18																
	S6-9		R61-13	48 x 30	7	13						1								
	S6-10		R61-13	48 x 30	7	13						1								
	S6-11		G78-1	42 x 54	7		16					1								
	S6-12		G8-1	66 x 30	7	13							1							
S-7	S7-1		W74 (Lt)	60 x 60	7		17						1							
	S7-2	W12-2 (14'-11")														1				
	S7-3		G86-5	120 x 78	7				20				1							
	S7-4		G85-11	120 x 66	7			18					1							
S-8	S8-1		R61-13	48 X 30	7	13						1								
	S8-2		R61-13	48 x 30	7	13						1								
	S8-3	Spec														1				
	S8-4	Spec 8A		84 x 42	7	14							1							
	S8-5		G85-6													1				
	S8-6		G78-1	42 x 54	7		16					1								
	S8-7		R61-34 Mod													1				
	S8-8		R61-34 Mod													1				
	S8-9	Spec 8B		78 x 48	7		16						1							
	S8-10	R10-15 Mod (Rt)		30 x 30	7									1						MOUNT TO SIGNAL POLE
	S8-11	R1-5 (Lt)		36 x 36	7					12	1									PER C.O.S. - 5E
	S8-12	R1-5 (Lt)		36 x 36	7					12	1									PER C.O.S. - 5E
	S8-13	R9-3		18 x 18	7					12	1									PER C.O.S. - 5E
		R9-7		12 x 18																
	S8-14		R26(S)/R81												1					
			R81B												1					
	S8-15	R10-10b		12 x 12	7									1						
		W16-1P		18 x 24										1						
		M6-2 (Lt)		21 x 15										1						
S-9	S9-1		W34C (14'-8")												1					
			R26(S)												1					
	S9-2		R26(S)												1					
	S9-3	R10-7													1					
			R26(S)												1					
	S9-4	D3-1 (MOFFET PARK Dr)														1				
SUBTOTAL SQ-12											4	7	6	4	7	8				

SIGN QUANTITIES SQ-12

LAST REVISION 01-15-18 | DATE PLOTTED => 6/20/2018 | TIME PLOTTED => 11:21:29 AM

DESIGNED BY: DIANNE A. GALVEZ | CALCULATED-DESIGNED BY: C. CHRES | CHECKED BY: | REVISED BY: SCV | DATE REVISED: 05/03/18

CONSULTANT FUNCTIONAL SUPERVISOR: TIMOTHY J. LEE

STATE OF CALIFORNIA - DEPARTMENT OF TRANSPORTATION

X:\237.101_Mathilde\000_CAD\Sheets\0A-Signs\OC-Quantities\0413000204oc012.dgn

BORDER LAST REVISED 7/2/2010 | USERNAME => Eilif | DGN FILE => 0413000204oc012.dgn | RELATIVE BORDER SCALE IS IN INCHES 0 1 2 3 | UNIT 0000 | PROJECT NUMBER & PHASE 0413000204

Dist	COUNTY	ROUTE	POST MILES TOTAL PROJECT	SHEET No.	TOTAL SHEETS
04	SCL	101,237	45.2/45.8, 2.7/3.3	343	736

REGISTERED CIVIL ENGINEER — 6-13-18 DATE

6-20-18
PLANS APPROVAL DATE

STEVE LOUPE No. 63575 Exp. 9/30/18 CIVIL — REGISTERED PROFESSIONAL ENGINEER — STATE OF CALIFORNIA

THE STATE OF CALIFORNIA OR ITS OFFICERS OR AGENTS SHALL NOT BE RESPONSIBLE FOR THE ACCURACY OR COMPLETENESS OF SCANNED COPIES OF THIS PLAN SHEET.

WMH CORPORATION
50 W San Fernando St
Suite 950
San Jose, CA 95113

VTA
3331 N First St
Building B
San Jose, Ca 95134

ROADSIDE SIGN QUANTITIES SUMMARY

SHEET No.	SIGN No.	SIGN CODE		SIGN PANEL SIZE	"C" DIM IN FEET	POST SIZE AND LENGTH					ROADSIDE SIGN (METAL POST)	ROADSIDE SIGN (WOOD POST)		INSTALL SIGN (SSBM)	REMOVE ROADSIDE SIGN (SSBM)	REMOVE ROADSIDE SIGN	INSTALL SIGN (MAST-ARM HANGER METHOD)	INSTALL ROADSIDE SIGN PANEL ON EXISTING POST	METAL (BARRIER MOUNTED SIGN)	REMARKS
						4" X 4"	4" X 6"	6" X 6"	6" X 8"	2" GALVANIZED PIPE	ONE POST	ONE POST	TWO POST							
		FEDERAL	CALIFORNIA	IN		FT						EA							LB	
S-9	S9-5	R1-1													1					
			R26												1					
	S9-6	W3-3														1				
	S9-7	W3-3		48 x 48	7		16					1								
	S9-8		R61-15													1				
	S9-9		R61-15													1				
	S9-10		R61-36 Mod	48 x 30	7	13						1								
	S9-11		R61-36 Mod	48 x 30	7	13						1								
	S9-12		R26													1				
		W1-7																		
		OM1-1																		
	S9-13	E5-1a (3B)														1				
	S9-14	E5-1a (3B)		90 x 60	7		17						1							
	S9-15		R26/R81												1					
	S9-16		R26/R81												1					
	S9-17		R26/R81												1					
	S9-18	R2-1 (40)		24 x 30	7									1						
	S9-19	R2-1 (40)													1					
			R26/R81												1					
	S9-20		R26(S)/R81												1					
	S9-21	R2-1 (40)													1					
			R26/R81												1					
	S9-22	W11-15		30 x 30	7	13						1								
	S9-23		R26(S)/R81													1				
	S9-24		R26/R81													1				
	S9-25	R2-1 (40)														1				
			R26(S)																	
	S9-26		R81													1				
			R81A																	
	S9-27	R2-1 (40)		24 x 30	7	13						1								
	S9-28	W11-2		30 x 30	7					13	1									PER C.O.S. - 5E
		W16-7P (Lt)		24 x 12																
	S9-29	W11-2		30 x 30	7	14						1								
		W16-7P (Lt)		24 x 12																
	S9-30	W11-2		30 x 30	7	14						1								
		W16-7P (Rt)		24 x 12																
	S9-31	W11-2		30 x 30	7					13	1									PER C.O.S. - 5E
		W16-7P (Rt)		24 x 12																
	S9-32	W11-2		30 x 30	7	14						1								
		W16-9P		24 x 12																
	S9-33	W11-2		30 x 30	7									1						
		W16-9P		24 x 12										1						
SUBTOTAL SQ-13											2	8	1	3	10	9				

SIGN QUANTITIES
SQ-13

DESIGN	DIANNE A. GALVEZ	C. CHRES	05/03/18	SCV
CALCULATED-DESIGNED BY	CHECKED BY	DATE REVISED	REVISED BY	

CONSULTANT FUNCTIONAL SUPERVISOR: TIMOTHY J. LEE

STATE OF CALIFORNIA - DEPARTMENT OF TRANSPORTATION

X:\Y237_101_Mathilde\000_CADSheets\OA-Signs\QC-Quantities\0413000204oc013.dgn

LAST REVISION 01-15-18 — DATE PLOTTED => 6/20/2018 — TIME PLOTTED => 11:21:34 AM

BORDER LAST REVISED 7/2/2010 | USERNAME => Eilif | DGN FILE => 0413000204oc013.dgn | RELATIVE BORDER SCALE IS IN INCHES 0 1 2 3 | UNIT 0000 | PROJECT NUMBER & PHASE 0413000204

Dist	COUNTY	ROUTE	POST MILES TOTAL PROJECT	SHEET No.	TOTAL SHEETS
04	SCL	101,237	45.2/45.8, 2.7/3.3	344	736

REGISTERED CIVIL ENGINEER — DATE: 6-13-18

PLANS APPROVAL DATE: 6-20-18

REGISTERED PROFESSIONAL ENGINEER — STEVE LOUPE — No. 63575 — Exp. 9/30/18 — CIVIL — STATE OF CALIFORNIA

THE STATE OF CALIFORNIA OR ITS OFFICERS OR AGENTS SHALL NOT BE RESPONSIBLE FOR THE ACCURACY OR COMPLETENESS OF SCANNED COPIES OF THIS PLAN SHEET.

WMH CORPORATION
50 W San Fernando St
Suite 950
San Jose, CA 95113

VTA
3331 N First St
Building B
San Jose, Ca 95134

ROADSIDE SIGN QUANTITIES SUMMARY

SHEET No.	SIGN No.	SIGN CODE		SIGN PANEL SIZE	"C" DIM IN FEET	POST SIZE AND LENGTH					ROADSIDE SIGN (METAL POST)	ROADSIDE SIGN (WOOD POST)		INSTALL SIGN (SSBM)	REMOVE ROADSIDE SIGN (SSBM)	REMOVE ROADSIDE SIGN	INSTALL SIGN (MAST-ARM HANGER METHOD)	INSTALL ROADSIDE SIGN PANEL ON EXISTING POST	METAL (BARRIER MOUNTED SIGN)	REMARKS
						4" X 4"	4" X 6"	6" X 6"	6" X 8"	2" GALVANIZED PIPE	ONE POST	ONE POST	TWO POST							
		FEDERAL	CALIFORNIA	IN		FT								EA					LB	
S-9	S9-34		R81													1				
			R81B																	
	S9-35	R9-3														1				SIGNS ON PEDESTRIAN BARRICADE
		R5-6																		
	S9-36	W11-1														1				
		W16-1P																		
	S9-37	W11-15		30 x 30	7	13						1								
	S9-38	W11-15		30 x 30	7					12	1									PER C.O.S. - 5E
	S9-39	R1-5 (Lt)		36 x 36	7					14	1									PER C.O.S. - 5E
		R9-3		18 x 18																
	S9-40	R1-6		12 x 36	1	8						1								
	S9-41	R1-6		12 x 36	1	8						1								
	S9-42	W11-1		30 x 30	7									1						
		W16-5P (Lt)		24 x 18										1						
	S9-43		G85-11	108 x 66	7			18					1								
	S9-44	W11-2														1				
		W16-9P																		
	S9-45	W11-2		30 x 30	7														114	
		W16-9P		24 x 12																
	S9-46		R18A													1				
	S9-47		R18A	66 x 48	7	15							1							
SUBTOTAL SQ-14											2	3	2	2		5			114	
SUBTOTAL SQ-13											2	8	1	3	10	9				
SUBTOTAL SQ-12											4	7	6	4	7	8				
SUBTOTAL SQ-11											3	3	2	4	8	9	5			
SUBTOTAL SQ-10											1	12		3	1	3	5	2	108	
SUBTOTAL SQ-9											5	11	1	2		3	4	1		
SUBTOTAL SQ-8											1	6	3		9	9				
SUBTOTAL SQ-7											1	4	2		11	11		1	112	
SUBTOTAL SQ-6												4		8	6	9	1			
SUBTOTAL SQ-5											4	4	1	5	4	5	3	2		
SUBTOTAL SQ-4												8		6	11	4			119	
SUBTOTAL SQ-3												7	3	10		4	3	2		
SUBTOTAL SQ-2											4	8		3	10	4	2			
SUBTOTAL SQ-1												8	1	1	11	8			119	
TOTAL											27	93	22	51	88	91	23	8	572	

SIGN QUANTITIES SQ-14

REVISED BY	SCV				
DATE REVISED	05/03/18				
DESIGNED BY	DIANNE A. GALVEZ	CALCULATED-			
CHECKED BY	C. CHRES				
CONSULTANT FUNCTIONAL SUPERVISOR	TIMOTHY J. LEE				

STATE OF CALIFORNIA - DEPARTMENT OF TRANSPORTATION — Caltrans®

X:\237_101_Mathilde\000_CAD\Sheets\QA-Signs\QC-Quantities\0413000204oc014.dgn

LAST REVISION 01-15-18 — DATE PLOTTED => 6/20/2018 — TIME PLOTTED => 11:21:37 AM

BORDER LAST REVISED 7/2/2010 | USERNAME => Eilif | DGN FILE => 0413000204oc014.dgn | RELATIVE BORDER SCALE IS IN INCHES 0 1 2 3 | UNIT 0000 | PROJECT NUMBER & PHASE 0413000204

Dist	COUNTY	ROUTE	POST MILES TOTAL PROJECT	SHEET No.	TOTAL SHEETS
04	SCL	101,237	45.2/45.8, 2.7/3.3	345	736

REGISTERED CIVIL ENGINEER — 6-13-18 DATE

6-20-18
PLANS APPROVAL DATE

STEVE LOUPE No. 63575 Exp. 9/30/18 CIVIL — REGISTERED PROFESSIONAL ENGINEER — STATE OF CALIFORNIA

THE STATE OF CALIFORNIA OR ITS OFFICERS OR AGENTS SHALL NOT BE RESPONSIBLE FOR THE ACCURACY OR COMPLETENESS OF SCANNED COPIES OF THIS PLAN SHEET.

WMH CORPORATION
50 W San Fernando St
Suite 950
San Jose, CA 95113

VTA
3331 N First St
Building B
San Jose, Ca 95134

ROADSIDE SIGN PANEL QUANTITIES SUMMARY

SHEET No.	SIGN No.	SIGN CODE		SIGN MESSAGE/DESCRIPTION	SIGN PANEL SIZE	PANEL AREA	BACKGROUND		BORDER & LEGEND		PREMIUM PROTECTIVE FILM	FURNISH SINGLE SHEET ALUMINUM SIGN				RETROREFLECTIVE SHEETING (TYPE IX)	RETROREFLECTIVE SHEETING (TYPE XI)	REMARKS
							SHEETING COLOR	RETROREFLECTIVE ASTM TYPE	SHEETING COLOR	RETROREFLECTIVE ASTM TYPE		UNFRAMED		FRAMED				
												0.063"	0.080"	0.063"	0.080"			
		FEDERAL	CALIFORNIA		IN	SQFT						SQFT						
S-1	S1-2	R14-1 Mod		TRUCK ROUTE	24 x 30	5.0	WHITE	IX	BLACK	PLAIN	X	5.0				5.0		
	S1-4		R73-2	LEFT TURN/U-TURN	24 x 24	4.0	WHITE	IX	BLACK	PLAIN	X	4.0				4.0		
	S1-8	R5-1		DO NOT ENTER	36 x 36	9.0	WHITE	IX	RED/WHITE	XI/XI	X	9.0				9.0		
		R5-1a		WRONG WAY	36 x 24	6.0	RED	XI	WHITE	XI	X	6.0					6.0	
	S1-9	R5-10c		NO PEDESTRIANS	24 x 12	2.0	WHITE	IX	BLACK	PLAIN	X	2.0				2.0		
	S1-10	R5-1		DO NOT ENTER	36 x 36	9.0	WHITE	IX	RED/WHITE	XI/XI	X	9.0				9.0		
		R5-1a		WRONG WAY	36 x 24	6.0	RED	XI	WHITE	XI	X	6.0					6.0	
	S1-11	W11-2		PEDESTRIAN	36 x 36	9.0	YELLOW	XI	BLACK	PLAIN	X	9.0					9.0	
		W16-7P (Lt)		LEFT DIAGONAL ARROW	24 x 12	2.0	YELLOW	XI	BLACK	PLAIN	X	2.0					2.0	
	S1-12		G92	FREEWAY ENTRANCE	48 x 30	10.0	GREEN	XI	WHITE	XI	X		10.0				10.0	
			G26-2 (101)	U.S. ROUTE MARKER (101)	28 x 24	4.7	WHITE	IX	BLACK	PLAIN	X	4.7				4.7		
		M3-3		SOUTH	24 x 12	2.0	WHITE	IX	BLACK	PLAIN	X	2.0				2.0		
		M6-2a (Rt)		DIAGONAL ARROW AUXILIARY (Rt)	21 x 15	2.2	WHITE	IX	BLACK	PLAIN	X	2.2				2.2		
	S1-13		R91-1	LEFT LANE, HOV 2+ 2 OR MORE ONLY WHEN METERED	36 x 54	13.5	BLACK/WHITE	PLAIN/IX	BLACK/WHITE	PLAIN/XI	X	13.5				13.5		
	S1-16	W12-2 (15'-2")		LOW CLEARANCE (15'-2")	36 x 36	9.0	YELLOW	XI	BLACK	PLAIN	X	9.0					9.0	
	S1-17		G92	FREEWAY ENTRANCE	48 x 30	10.0	GREEN	XI	WHITE	XI	X		10.0				10.0	
			G26-2 (101)	U.S. 101 ROUTE MARKER	28 x 24	4.7	WHITE	IX	BLACK	PLAIN	X	4.7				4.7		
		M3-3		SOUTH	24 x 12	2.0	WHITE	IX	BLACK	PLAIN	X	2.0				2.0		
		M6-1 (Rt)		RIGHT ARROW AUXILIARY	21 x 15	2.2	WHITE	IX	BLACK	PLAIN	X	2.2				2.2		
	S1-20		G8-7	TO SUNNYVALE AND SAN JOSE	60 x 36	15.0	GREEN	XI	WHITE	XI	X			15.0			15.0	
	S1-23		G92	FREEWAY ENTRANCE	48 x 30	10.0	GREEN	XI	WHITE	XI	X		10.0				10.0	
			G26-2 (101)	U.S. ROUTE MARKER (101)	28 x 24	4.7	WHITE	IX	BLACK	PLAIN	X	4.7				4.7		
		M3-3		SOUTH	24 x 12	2.0	WHITE	IX	BLACK	PLAIN	X	2.0				2.0		
		M6-2a (Lt)		DIAGONAL ARROW AUXILIARY (Lt)	21 x 15	2.2	WHITE	IX	BLACK	PLAIN	X	2.2				2.2		
	S1-24	Spec 1C		TO 101 NORTH WITH ARROW	24 x 30	5.0	WHITE	IX	BLACK	PLAIN	X	5.0				5.0		
	S1-25	W1-1a (10) (Lt)		TURN WITH ADVISORY SPEED (10) (Lt)	36 x 36	9.0	YELLOW	XI	BLACK	PLAIN	X	9.0					9.0	
	S1-27	Spec 1D		TO MATHILDA AND SB 101 WITH ARROWS	54 x 42	15.8	GREEN	XI	WHITE	XI	X		15.8				15.8	
	S1-28	R3-18		COMBINATION U-TURN & LEFT TURN PROHIBITION	24 x 24	4.0	WHITE	IX	BLACK/RED	PLAIN/XI	X	4.0				4.0		
	S1-34	R5-10a		NO PEDESTRIANS BICYCLES MOTOR-DRIVEN CYCLES	30 x 36	7.5	WHITE	IX	BLACK	PLAIN	X	7.5				7.5		
	S1-35	R9-3		NO PEDEDSTRIAN CROSSING SYMBOL	18 x 18	2.3	WHITE	IX	BLACK/RED	PLAIN/XI	X	2.3				2.3		
	S1-36		R61-20.1 Mod	INTERSECTION LANE CONTROL (Mod)	40 x 40	11.1	WHITE	IX	BLACK	PLAIN	X	11.1				11.1		
	S1-37		R61-19	INTERSECTION LANE CONTROL	36 x 30	7.5	WHITE	IX	BLACK	PLAIN	X	7.5				7.5		
	S1-38		R61-19	INTERSECTION LANE CONTROL	36 x 30	7.5	WHITE	IX	BLACK	PLAIN	X	7.5				7.5		
	S1-39		R26/R81	NO PARKING ANY TIME BIKE LANE/ BIKE WRONG WAY	12 x 18	1.5	WHITE/RED	IX/XI	WHITE/RED/BLACK	XI/XI/ PLAIN	X	1.5				1.5		PER C.O.S. 4E-2
	S1-40		R26/R81	NO PARKING ANY TIME BIKE LANE/ BIKE WRONG WAY	12 x 18	1.5	WHITE/RED	IX/XI	WHITE/RED/BLACK	XI/XI/ PLAIN	X	1.5				1.5		PER C.O.S. 4E-2
SUBTOTAL SQ-15												158.1	45.8	15.0		117.1	101.8	

SIGN QUANTITIES SQ-15

DIANNE A. GALVEZ	SCV	05/03/18	CALCULATED-DESIGNED BY	
C. CHRES			CHECKED BY	
TIMOTHY J. LEE			CONSULTANT FUNCTIONAL SUPERVISOR	
STATE OF CALIFORNIA - DEPARTMENT OF TRANSPORTATION				

X:\237_101_Mathilda\000_CAD\Sheets\OA-Signs\OC-Quantities\0413000204oc015.dgn

LAST REVISION 01-15-18 — DATE PLOTTED => 6/20/2018 TIME PLOTTED => 11:21:42 AM

BORDER LAST REVISED 7/2/2010 | USERNAME => Eilif DGN FILE => 0413000204oc015.dgn | RELATIVE BORDER SCALE IS IN INCHES 0 1 2 3 | UNIT 0000 | PROJECT NUMBER & PHASE 0413000204

Dist	COUNTY	ROUTE	POST MILES TOTAL PROJECT	SHEET No.	TOTAL SHEETS
04	SCL	101,237	45.2/45.8, 2.7/3.3	346	736

REGISTERED CIVIL ENGINEER — 6-13-18 DATE

6-20-18
PLANS APPROVAL DATE

REGISTERED PROFESSIONAL ENGINEER — STEVE LOUPE — No. 63575 — Exp. 9/30/18 — CIVIL — STATE OF CALIFORNIA

THE STATE OF CALIFORNIA OR ITS OFFICERS OR AGENTS SHALL NOT BE RESPONSIBLE FOR THE ACCURACY OR COMPLETENESS OF SCANNED COPIES OF THIS PLAN SHEET.

WMH CORPORATION
50 W San Fernando St
Suite 950
San Jose, CA 95113

VTA
3331 N First St
Building B
San Jose, Ca 95134

ROADSIDE SIGN PANEL QUANTITIES SUMMARY

SHEET No.	SIGN No.	SIGN CODE		SIGN MESSAGE/DESCRIPTION	SIGN PANEL SIZE	PANEL AREA	BACKGROUND		BORDER & LEGEND		PREMIUM PROTECTIVE FILM	FURNISH SINGLE SHEET ALUMINUM SIGN				RETROREFLECTIVE SHEETING (TYPE IX)	RETROREFLECTIVE SHEETING (TYPE XI)	REMARKS
							SHEETING COLOR	RETROREFLECTIVE ASTM TYPE	SHEETING COLOR	RETROREFLECTIVE ASTM TYPE		UNFRAMED		FRAMED				
		FEDERAL	CALIFORNIA		IN	SQFT						0.063"	0.080"	0.063"	0.080"	SQFT		
S-1	S1-41		R26/R81	NO PARKING ANY TIME BIKE LANE/ BIKE WRONG WAY	12 x 18	1.5	WHITE/RED	IX/XI	WHITE/RED/BLACK	XI/XI/ PLAIN	X	1.5				1.5		PER C.O.S. 4E-2
	S1-42	Spec 1A		TO 101 NORTH/SOUTH (WITH ARROWS)	48 x 42	14.0	GREEN	XI	WHITE	XI	X		14.0				14.0	
		D1-1		TO AHWANEE (RIGHT ARROW)	48 x 24	8.0	GREEN	XI	WHITE	XI			8.0				8.0	
	S1-43	W11-2		PEDESTRIAN	36 x 36	9.0	YELLOW	XI	BLACK	PLAIN	X	9.0					9.0	
		W16-7P (R+)		DIAGONAL DOWNWARD ARROW (R+)	24 x 12	2.0	YELLOW	XI	BLACK	PLAIN	X	2.0					2.0	
	S1-45		R100B	DISABLED PARKING TOW-AWAY	24 X 24	4.0	WHITE	IX	BLACK	PLAIN	X	4.0				4.0		
	S1-46		W34C (14'-11") (R+)	CAUTION VERTICAL CLEARANCE (14'-8") (R+)	36 x 54	13.5	YELLOW	XI	BLACK	PLAIN	X	13.5					13.5	
	S1-47		G92	FREEWAY ENTRANCE	48 x 30	10.0	GREEN	XI	WHITE	XI	X		10.0				10.0	
			G26-2 (101)	U.S. ROUTE MARKER (101)	28 X 24	4.7	WHITE	IX	BLACK	PLAIN	X	4.7				4.7		
		M3-3		SOUTH	24 X 12	2.0	WHITE	IX	BLACK	PLAIN	X	2.0				2.0		
		M6-2a (R+)		DIAGONAL AUXILIARY ARROW (R+)	21 X 15	2.2	WHITE	IX	BLACK	PLAIN	X	2.2				2.2		
	S1-48		R73-6	LEFT TURN/ NO U TURN	24 x 24	4.0	WHITE	IX	BLACK	PLAIN	X	4.0				4.0		
	S1-49		R91-1	LEFT LANE, HOV 2+ 2 OR MORE ONLY WHEN METERED	36 x 54	13.5	BLACK/WHITE	PLAIN/IX	BLACK/WHITE	PLAIN/XI	X	13.5				13.5		
	S1-50		G8-1	DOWNTOWN SUNNYVALE (RIGHT ARROW)	66 x 30	13.8	GREEN	XI	WHITE	XI	X			13.8			13.8	
			G78-1	INTERCHANGE GUIDE (237) (LEFT ARROW)	42 x 54	15.8	GREEN	XI	WHITE	XI	X	15.8					15.8	
	S1-51		Spec 1E	TO MATHILDA NORTH AND SB 101 WITH ARROWS	60 x 48	20.0	WHITE	IX	BLACK	PLAIN	X			20.0		20.0		
	S1-53		Spec 1E	TO MATHILDA NORTH AND SB 101 WITH ARROWS	60 x 48	20.0	WHITE	IX	BLACK	PLAIN	X			20.0		20.0		
	S1-54		R49 (R+)	NO PED CROSSING USE CROSSWALK	42 x 18	5.3	WHITE	IX	BLACK	PLAIN	X	5.3				5.3		
	S1-55		R81	BIKE LANE	12 x 8	0.7	WHITE	IX	BLACK	PLAIN	X	0.7				0.7		
			R81B	END	8 x 5	0.3	WHITE	IX	BLACK	PLAIN	X	0.3				0.3		
	S1-56		R49 (R+)	NO PED CROSSING USE CROSSWALK	42 x 18	5.3	WHITE	IX	BLACK	PLAIN	X	5.3				5.3		
	S1-58	R10-11a		NO TURN ON RED	36 x 48	12.0	WHITE	IX	BLACK	PLAIN	X	12.0				12.0		
	S1-59	R10-6a		STOP HERE ON RED (CURVED ARROW)	24 x 30	5.0	WHITE	IX	BLACK	PLAIN	X	5.0				5.0		
		R3-7bP		EXCEPT BICYCLES	24 x 12	2.0	WHITE	IX	BLACK	PLAIN	X	2.0				2.0		
	S1-61		R73-6	LEFT TURN/ NO U TURN	24 x 24	4.0	WHITE	IX	BLACK	PLAIN	X	4.0				4.0		
	S1-63	R3-18		COMBINATION U-TURN & LEFT TURN PROHIBITION	24 x 24	4.0	WHITE	IX	BLACK/RED	PLAIN/XI	X	4.0				4.0		
	S1-66	W3-8		RAMP METERED WHEN FLASHING	36 x 36	9.0	YELLOW	XI	BLACK	PLAIN	X	9.0					9.0	
	S1-67	W3-7		RAMP METER AHEAD	36 x 36	9.0	YELLOW	XI	BLACK	PLAIN	X	9.0					9.0	
SUBTOTAL SQ-16												128.8	32.0	53.8		110.5	104.1	

SIGN QUANTITIES SQ-16

DESIGNED BY	DIANNE A. GALVEZ	REVISED BY	SCV	
CALCULATED-		DATE REVISED	05/03/18	
CHECKED BY	C. CHRES			
CONSULTANT FUNCTIONAL SUPERVISOR	TIMOTHY J. LEE			

STATE OF CALIFORNIA - DEPARTMENT OF TRANSPORTATION

Caltrans

X:\237_101_Mathilda\000_CAD\Sheets\OA-Signs\OC-Quantities\0413000204oc016.dgn

LAST REVISION 01-15-18 | DATE PLOTTED => 6/20/2018 | TIME PLOTTED => 11:21:47 AM

BORDER LAST REVISED 7/2/2010 | USERNAME => Eilif | DGN FILE => 0413000204oc016.dgn | RELATIVE BORDER SCALE IS IN INCHES 0 1 2 3 | UNIT 0000 | PROJECT NUMBER & PHASE 0413000204

Dist	COUNTY	ROUTE	POST MILES TOTAL PROJECT	SHEET No.	TOTAL SHEETS
04	SCL	101,237	45.2/45.8, 2.7/3.3	347	736

REGISTERED CIVIL ENGINEER — 6-13-18 DATE

6-20-18
PLANS APPROVAL DATE

REGISTERED PROFESSIONAL ENGINEER — STEVE LOUPE — No. 63575 — Exp. 9/30/18 — CIVIL — STATE OF CALIFORNIA

THE STATE OF CALIFORNIA OR ITS OFFICERS OR AGENTS SHALL NOT BE RESPONSIBLE FOR THE ACCURACY OR COMPLETENESS OF SCANNED COPIES OF THIS PLAN SHEET.

WMH CORPORATION
50 W San Fernando St
Suite 950
San Jose, CA 95113

VTA
3331 N First St
Building B
San Jose, Ca 95134

ROADSIDE SIGN PANEL QUANTITIES SUMMARY

SHEET No.	SIGN No.	SIGN CODE		SIGN MESSAGE/DESCRIPTION	SIGN PANEL SIZE	PANEL AREA	BACKGROUND		BORDER & LEGEND		PREMIUM PROTECTIVE FILM	FURNISH SINGLE SHEET ALUMINUM SIGN				RETROREFLECTIVE SHEETING (TYPE IX)	RETROREFLECTIVE SHEETING (TYPE XI)	REMARKS
							SHEETING COLOR	RETROREFLECTIVE ASTM TYPE	SHEETING COLOR	RETROREFLECTIVE ASTM TYPE		UNFRAMED		FRAMED				
		FEDERAL	CALIFORNIA		IN	SQFT						0.063"	0.080"	0.063"	0.080"	SQFT		
S-1	S1-68	W3-7		RAMP METER AHEAD	36 x 36	9.0	YELLOW	XI	BLACK	PLAIN	X	9.0					9.0	
	S1-69	W3-8		RAMP METERED WHEN FLASHING	36 x 36	9.0	YELLOW	XI	BLACK	PLAIN	X	9.0					9.0	
	S1-70	W3-8		RAMP METERED WHEN FLASHING	36 x 36	9.0	YELLOW	XI	BLACK	PLAIN	X	9.0					9.0	
	S1-71	W3-7		RAMP METER AHEAD	36 x 36	9.0	YELLOW	XI	BLACK	PLAIN	X	9.0					9.0	
	S1-72	W3-7		RAMP METER AHEAD	36 x 36	9.0	YELLOW	XI	BLACK	PLAIN	X	9.0					9.0	
	S1-73	R5-10a		NO PEDESTRIANS, BICYCLES, MOTOR-DRIVEN CYCLES	30 x 36	7.5	WHITE	IX	BLACK	PLAIN	X	7.5				7.5		
	S1-74	R6-1 (Lt)		ONE WAY (Lt)	54 x 18	6.8	BLACK	PLAIN	WHITE/BLACK	XI/PLAIN	X		6.8			6.8		
S-2	S2-1	M3-2		EAST	24 x 12	2.0	GREEN	XI	WHITE	XI	X	2.0					2.0	
			G28-2 (237)	STATE ROUTE MARKER (237)	28 x 25	4.9	GREEN	XI	WHITE	XI	X	4.9					4.9	
		M6-3		STRAIGHT ARROW AUXILIARY	21 x 15	2.2	GREEN	XI	WHITE	XI	X	2.2					2.2	
	S2-4		G8-4	TO SAN FRANCISCO WITH ARROW (Rt)	42 x 24	7.0	GREEN	XI	WHITE	XI	X	7.0					7.0	
	S2-6		G92	FREEWAY ENTRANCE	48 x 30	10.0	GREEN	XI	WHITE	XI	X		10.0				10.0	
			G26-2 (101)	U.S. ROUTE MARKER (101)	28 x 24	4.7	WHITE	IX	BLACK	PLAIN	X	4.7				4.7		
		M3-1		NORTH	24 x 12	2.0	WHITE	IX	BLACK	PLAIN	X	2.0				2.0		
		M6-1 (Rt)		RIGHT ARROW AUXILIARY	21 x 15	2.2	WHITE	IX	BLACK	PLAIN	X	2.2				2.2		
	S2-7	R4-7		KEEP RIGHT (SYMBOL)	24 x 30	5.0	WHITE	IX	BLACK	PLAIN	X	5.0				5.0		
	S2-9		G92	FREEWAY ENTRANCE	48 x 30	10.0	GREEN	XI	WHITE	XI	X		10.0				10.0	
			G26-2 (101)	U.S. ROUTE MARKER (101)	28 x 24	4.7	WHITE	IX	BLACK	PLAIN	X	4.7				4.7		
		M3-1		NORTH	24 x 12	2.0	WHITE	IX	BLACK	PLAIN	X	2.0				2.0		
		M6-2a (Rt)		DIAGONAL ARROW AUXILIARY (Rt)	21 x 15	2.2	WHITE	IX	BLACK	PLAIN	X	2.2				2.2		
	S2-11	W12-2 (14'-11")		LOW CLEARANCE (14'-11")	36 x 36	9.0	YELLOW	XI	BLACK	PLAIN	X	9.0					9.0	
	S2-13		R91-1	LEFT LANE, HOV 2+ 2 OR MORE ONLY WHEN METERED	36 x 54	13.5	BLACK/WHITE	PLAIN/IX	BLACK/WHITE	PLAIN/XI	X	13.5				13.5		
	S2-15		R91-1	LEFT LANE, HOV 2+ 2 OR MORE ONLY WHEN METERED	36 x 54	13.5	BLACK/WHITE	PLAIN/IX	BLACK/WHITE	PLAIN/XI	X	13.5				13.5		
	S2-16	R5-1		DO NOT ENTER	36 x 36	9.0	WHITE	IX	RED/WHITE	XI/XI	X	9.0				9.0		
		R5-1a		WRONG WAY	36 x 24	6.0	RED	XI	WHITE	XI	X	6.0					6.0	
	S2-17	R5-1		DO NOT ENTER	36 x 36	9.0	WHITE	IX	RED/WHITE	XI/XI	X	9.0				9.0		
		R5-1a		WRONG WAY	36 x 24	6.0	RED	XI	WHITE	XI	X	6.0					6.0	
	S2-18	R5-10c		PEDESTRIANS PROHIBITED	24 x 12	2.0	WHITE	IX	BLACK	PLAIN	X	2.0				2.0		
	S2-19	R5-10a		NO PEDESTRIANS BICYCLES MOTOR-DRIVEN CYCLES	30 x 36	7.5	WHITE	IX	BLACK	PLAIN	X	7.5				7.5		
	S2-24	R2-1 (40)		SPEED LIMIT (40)	30 x 36	7.5	WHITE	IX	BLACK	PLAIN	X	7.5				7.5		
		R2-1 (40)		SPEED LIMIT (40)	30 x 36	7.5	WHITE	IX	BLACK	PLAIN	X	7.5				7.5		
	S2-26	Spec 2A		DOWNTOWN SHOPPING DISTRICT 2 MI	36 x 24	6.0	GREEN	XI	WHITE	XI	X	6.0					6.0	
SUBTOTAL SQ-17												187.9	26.8			106.6	108.1	

SIGN QUANTITIES
SQ- 17

REVISED BY	SCV		
DATE REVISED	05/03/18		
DIANNE A. GALVEZ	C. CHRES	TIMOTHY J. LEE	
CALCULATED-DESIGNED BY	CHECKED BY	CONSULTANT FUNCTIONAL SUPERVISOR	

STATE OF CALIFORNIA - DEPARTMENT OF TRANSPORTATION

Caltrans

X:\237_101_Morrilldo\000_CAD\Sheets\OA-Signs\OC-Quantities\0413000204oc017.dgn

LAST REVISION 01-15-18
DATE PLOTTED => 6/20/2018
TIME PLOTTED => 11:21:52 AM

BORDER LAST REVISED 7/2/2010 | USERNAME => Elilf | DGN FILE => 0413000204oc017.dgn | RELATIVE BORDER SCALE IS IN INCHES 0 1 2 3 | UNIT 0000 | PROJECT NUMBER & PHASE 0413000204

Dist	COUNTY	ROUTE	POST MILES TOTAL PROJECT	SHEET No.	TOTAL SHEETS
04	SCL	101,237	45.2/45.8, 2.7/3.3	348	736

REGISTERED CIVIL ENGINEER — DATE: 6-13-18

PLANS APPROVAL DATE: 6-20-18

REGISTERED PROFESSIONAL ENGINEER — STEVE LOUPE — No. 63575 — Exp. 9/30/18 — CIVIL — STATE OF CALIFORNIA

THE STATE OF CALIFORNIA OR ITS OFFICERS OR AGENTS SHALL NOT BE RESPONSIBLE FOR THE ACCURACY OR COMPLETENESS OF SCANNED COPIES OF THIS PLAN SHEET.

WMH CORPORATION
50 W San Fernando St
Suite 950
San Jose, CA 95113

VTA
3331 N First St
Building B
San Jose, Ca 95134

ROADSIDE SIGN PANEL QUANTITIES SUMMARY

SHEET No.	SIGN No.	SIGN CODE		SIGN MESSAGE/DESCRIPTION	SIGN PANEL SIZE	PANEL AREA	BACKGROUND		BORDER & LEGEND		PREMIUM PROTECTIVE FILM	FURNISH SINGLE SHEET ALUMINUM SIGN				RETROREFLECTIVE SHEETING (TYPE IX)	RETROREFLECTIVE SHEETING (TYPE XI)	REMARKS
							SHEETING COLOR	RETROREFLECTIVE ASTM TYPE	SHEETING COLOR	RETROREFLECTIVE ASTM TYPE		UNFRAMED		FRAMED				
		FEDERAL	CALIFORNIA		IN	SQFT						0.063"	0.080"	0.063"	0.080"	SQFT		
S-2	S2-30		G8-4	TO SAN JOSE WITH ARROW (R†)	36 x 24	6.0	GREEN	XI	WHITE	XI	X	6.0					6.0	
	S2-33		W34C (15'-2") (R†)	CAUTION VERTICAL CLEARANCE (15'-2") (R†)	36 x 54	13.5	YELLOW	XI	BLACK	PLAIN	X	13.5					13.5	
	S2-35		R13A	NO RIGHT TURN ON RED	24 x 36	6.0	WHITE	IX	BLACK/RED	PLAIN/XI	X	6.0				6.0		
	S2-36		R26/R81	NO PARKING ANY TIME BIKE LANE/ BIKE WRONG WAY	12 x 18	1.5	WHITE/RED	IX/XI	WHITE/RED/BLACK	XI/XI/ PLAIN	X	1.5				1.5		PER C.O.S. 4E-2
	S2-37	Spec 2B		ROSS DR 237 EAST (RIGHT DIAGONAL ARROW)	48 x 42	14.0	GREEN	XI	WHITE	XI	X		14.0				14.0	
	S2-38		G77-4	INTERCHANGE GUIDE	84 x 54	31.5	GREEN	XI	WHITE	XI	X				31.5		31.5	
	S2-39		G92	FREEWAY ENTRANCE	48 x 30	10.0	GREEN	XI	WHITE	XI	X		10.0				10.0	
			G26-2 (101)	U.S. ROUTE MARKER (101)	28 x 24	4.7	WHITE	IX	BLACK	PLAIN	X	4.7				4.7		
		M3-1		NORTH	24 x 12	2.0	WHITE	IX	BLACK	PLAIN	X	2.0				2.0		
		M6-2a (L†)		DIAGONAL ARROW AUXILIARY (L†)	21 x 15	2.2	WHITE	IX	BLACK	PLAIN	X	2.2				2.2		
	S2-40		R73-6	LEFT TURN/ NO U TURN	24 x 24	4.0	WHITE	IX	BLACK	PLAIN	X	4.0				4.0		
	S2-42		R13A	NO RIGHT TURN ON RED	24 x 36	6.0	WHITE	IX	BLACK/RED	PLAIN/XI	X	6.0				6.0		
	S2-43	R2-1 (40)		SPEED LIMIT (40)	30 x 36	7.5	WHITE	IX	BLACK	PLAIN	X	7.5				7.5		
	S2-44	R2-1 (40)		SPEED LIMIT (40)	30 x 36	7.5	WHITE	IX	BLACK	PLAIN	X	7.5				7.5		
	S2-47		R73-3	INTERSECTION LANE CONTROL	24 x 24	4.0	WHITE	IX	BLACK	PLAIN	X	4.0				4.0		
	S2-48		R49 (R†)	NO PED CROSSING USE CROSSWALK	42 x 18	5.3	WHITE	IX	BLACK	PLAIN	X	5.3				5.3		
	S2-50		R49 (L†)	NO PED CROSSING USE CROSSWALK	42 x 18	5.3	WHITE	IX	BLACK	PLAIN	X	5.3				5.3		
	S2-51	R3-18		COMBINATION U-TURN & LEFT TURN PROHIBITION	24 x 24	4.0	WHITE	IX	BLACK/RED	PLAIN/XI	X	4.0				4.0		
	S2-53	R10-6 (L†)		STOP HERE ON RED (L†)	24 x 36	6.0	WHITE	IX	BLACK	PLAIN	X	6.0				6.0		
			R89	1 CAR PER GREEN	24 x 6	1.0	WHITE	IX	BLACK	PLAIN	X	1.0				1.0		
	S2-54	W3-8		RAMP METERED WHEN FLASHING	36 x 36	9.0	YELLOW	XI	BLACK	PLAIN	X	9.0					9.0	
	S2-55	W3-8		RAMP METERED WHEN FLASHING	36 x 36	9.0	YELLOW	XI	BLACK	PLAIN	X	9.0					9.0	
	S2-56	W3-7		RAMP METER AHEAD	36 x 36	9.0	YELLOW	XI	BLACK	PLAIN	X	9.0					9.0	
	S2-57	W3-7		RAMP METER AHEAD	36 x 36	9.0	YELLOW	XI	BLACK	PLAIN	X	9.0					9.0	
	S2-58	R6-1 (L†)		ONE WAY (L†)	54 x 18	6.8	BLACK	PLAIN	WHITE/BLACK	XI/PLAIN	X	6.8				6.8		
S-3	S3-1	R10-12		LEFT TURN YEILD ON GREEN	30 x 36	7.5	WHITE	IX	BLACK/GREEN	PLAIN/X1	X	7.5				7.5		
	S3-4	R10-7		DO NOT BLOCK INTERSECTION	24 x 30	5.0	WHITE	IX	BLACK	PLAIN	X	5.0				5.0		
	S3-7		G92	FREEWAY ENTRANCE	48 x 30	10.0	GREEN	XI	WHITE	XI	X		10.0				10.0	
			G28-2 (237)	STATE ROUTE MARKER (237)	28 x 25	4.9	GREEN	XI	WHITE	XI	X	4.9					4.9	
		M3-2		EAST	24 x 12	2.0	GREEN	XI	WHITE	XI	X	2.0					2.0	
		M6-2a (L†)		DIAGONAL ARROW AUXILIARY (L†)	21 x 15	2.2	GREEN	XI	WHITE	XI	X	2.2					2.2	
	S3-12	W12-2 (14'-11")		LOW CLEARANCE (14'-11")	36 x 36	9.0	YELLOW	XI	BLACK	PLAIN	X	9.0					9.0	
			W34A (350 FT)	350 FT AHEAD	36 x 30	7.5	YELLOW	XI	BLACK	PLAIN	X	7.5					7.5	
	S3-15		R61-11	INTERSECTION LANE CONTROL	36 x 30	7.5	WHITE	IX	BLACK	PLAIN	X	7.5				7.5		
	S3-19	W12-2 (14'-11")		LOW CLEARANCE (14'-11")	36 x 36	9.0	YELLOW	XI	BLACK	PLAIN	X	9.0					9.0	
	S3-20		G92	FREEWAY ENTRANCE	48 x 30	10.0	GREEN	XI	WHITE	XI	X		10.0				10.0	
			G28-2 (237)	STATE ROUTE MARKER (237)	28 x 25	4.9	GREEN	XI	WHITE	XI	X	4.9					4.9	
		M3-2		EAST	24 x 12	2.0	GREEN	XI	WHITE	XI	X	2.0					2.0	
		M6-2a (R†)		DIAGONAL ARROW AUXILIARY (R†)	21 x 15	2.2	GREEN	XI	WHITE	XI	X	2.2					2.2	
SUBTOTAL SQ-18												193.0	44.0		31.5	93.8	174.7	

SIGN QUANTITIES SQ-18

CALCULATED-DESIGNED BY	DIANNE A. GALVEZ	REVISED BY	SCV	LAST REVISION	01-15-18
CHECKED BY	C. CHRES	DATE REVISED	05/03/18	DATE PLOTTED => 6/20/2018	
SUPERVISOR	TIMOTHY J. LEE	CONSULTANT FUNCTIONAL SUPERV		TIME PLOTTED => 11:21:56 AM	

STATE OF CALIFORNIA - DEPARTMENT OF TRANSPORTATION

X:\237_101_Mathilda\000_CAD\Sheets\OA-Signs\QC-Quantities\0413000204oc018.dgn

BORDER LAST REVISED 7/2/2010 | USERNAME => Eilif | DGN FILE => 0413000204oc018.dgn | RELATIVE BORDER SCALE IS IN INCHES 0 1 2 3 | UNIT 0000 | PROJECT NUMBER & PHASE 0413000204

Dist	COUNTY	ROUTE	POST MILES TOTAL PROJECT	SHEET No.	TOTAL SHEETS
04	SCL	101,237	45.2/45.8, 2.7/3.3	349	736

REGISTERED CIVIL ENGINEER — 6-13-18 DATE

6-20-18
PLANS APPROVAL DATE

STEVE LOUPE No. 63575 Exp. 9/30/18 CIVIL — REGISTERED PROFESSIONAL ENGINEER — STATE OF CALIFORNIA

THE STATE OF CALIFORNIA OR ITS OFFICERS OR AGENTS SHALL NOT BE RESPONSIBLE FOR THE ACCURACY OR COMPLETENESS OF SCANNED COPIES OF THIS PLAN SHEET.

WMH CORPORATION
50 W San Fernando St
Suite 950
San Jose, CA 95113

VTA
3331 N First St
Building B
San Jose, Ca 95134

ROADSIDE SIGN PANEL QUANTITIES SUMMARY

SHEET No.	SIGN No.	SIGN CODE		SIGN MESSAGE/DESCRIPTION	SIGN PANEL SIZE	PANEL AREA	BACKGROUND		BORDER & LEGEND		PREMIUM PROTECTIVE FILM	FURNISH SINGLE SHEET ALUMINUM SIGN				RETROREFLECTIVE SHEETING (TYPE IX)	RETROREFLECTIVE SHEETING (TYPE XI)	REMARKS
												UNFRAMED		FRAMED				
		FEDERAL	CALIFORNIA		IN	SQFT	SHEETING COLOR	RETROREFLECTIVE ASTM TYPE	SHEETING COLOR	RETROREFLECTIVE ASTM TYPE		0.063"	0.080"	0.063"	0.080"			
												SQFT						
S-3	S3-22		R49 (Rt)	NO PED CROSSING USE CROSSWALK	42 x 18	5.3	WHITE	IX	BLACK	PLAIN	X	5.3				5.3		
	S3-23	R10-11		NO TURN ON RED	36 x 48	12.0	WHITE	IX	RED/BLACK	XI/PLAIN	X	12.0				12.0		
	S3-28	R6-1 (Lt)		ONE WAY (Lt)	54 x 18	6.8	BLACK	PLAIN	WHITE/BLACK	XI/PLAIN	X		6.8			6.8		
		R6-1 (Rt)		ONE WAY (Rt)	54 x 18	6.8	BLACK	PLAIN	WHITE/BLACK	XI/PLAIN	X		6.8			6.8		
	S3-31		G8-1	TO DOWNTOWN SUNNYVALE WITH ARROW (Lt)	66 x 30	13.8	GREEN	XI	WHITE	XI	X			13.8			13.8	
	S3-33		W34C (14'-8") (Lt)	CAUTION VERTICAL CLEARANCE (14'-8") (Lt)	36 x 54	13.5	YELLOW	XI	BLACK	PLAIN	X	13.5					13.5	
	S3-36		G26-2 (101)	U.S. ROUTE MARKER (101)	28 x 24	4.7	WHITE	IX	BLACK	PLAIN	X	4.7				4.7		
		M6-1 (Lt)		LEFT ARROW AUXILIARY	21 x 15	2.2	WHITE	IX	BLACK	PLAIN	X	2.2				2.2		
	S3-39	D1-1		TO INNOVATION WAY WITH ARROW (Lt)	66 x 24	11.0	GREEN	XI	WHITE	XI	X			11.0			11.0	
	S3-42	R2-1 (40)		SPEED LIMIT (40)	30 x 36	7.5	WHITE	IX	BLACK	PLAIN	X	7.5				7.5		
	S3-46	R6-1 (Lt)		ONE WAY (Lt)	54 x 18	6.8	BLACK	PLAIN	WHITE/BLACK	XI/PLAIN	X		6.8			6.8		
	S3-47	R6-1 (Lt)		ONE WAY	54 x 18	6.8	BLACK	PLAIN	WHITE/BLACK	XI/PLAIN	X		6.8			6.8		
		R6-1 (Rt)		ONE WAY	54 x 18	6.8	BLACK	PLAIN	WHITE/BLACK	XI/PLAIN	X		6.8			6.8		
	S3-49		G77-4	TO 237 EAST/WEST WITH ARROWS	72 x 54	27.0	GREEN	XI	WHITE	XI	X			27.0			27.0	
	S3-51		R61-11	INTERSECTION LANE CONTROL	54 x 45	16.9	WHITE	IX	BLACK	PLAIN	X		16.9			16.9		
	S3-54		W34C (14'-8") (Rt)	CAUTION VERTICAL CLEARANCE (14'-8") (Rt)	36 x 54	13.5	YELLOW	XI	BLACK	PLAIN	X	13.5					13.5	
	S3-56		G92	FREEWAY ENTRANCE	48 x 30	10.0	GREEN	XI	WHITE	XI	X		10.0				10.0	
			G28-2 (237)	STATE ROUTE MARKER (237)	28 x 25	4.9	GREEN	XI	WHITE	XI	X	4.9					4.9	
		M3-4		WEST	24 x 12	2.0	GREEN	XI	WHITE	XI	X	2.0					2.0	
		M6-1 (Lt)		LEFT ARROW AUXILIARY	21 x 15	2.2	GREEN	XI	WHITE	XI	X	2.2					2.2	
	S3-62	D3-1 (ROSS Dr)		STREET NAME SIGN	24 x 6	1.0	GREEN	XI	WHITE	XI	X	1.0					1.0	
		D3-1 (PERSIAN Dr)		STREET NAME SIGN	24 x 6	1.0	GREEN	XI	WHITE	XI	X	1.0					1.0	
	S3-65		G8-13	TO SUNNYVALE, CIVIC CENTER, SAN JOSE WITH ARROW	72 x 36	18.0	GREEN	XI	WHITE	XI	X			18.0			18.0	
	S3-66	R9-3		NO PEDESTRIAN CROSSING	18 x 18	2.3	WHITE	IX	BLACK/RED	PLAIN/XI	X	2.3				2.3		
	S3-67	Spec 3B		TO MATHILDA AND 237 EAST WITH ARROWS	84 x 48	28.0	GREEN	XI	WHITE	XI	X				28.0		28.0	
	S3-68	R10-15		TURNING VEHICLES YIELD TO PEDS	30 x 30	6.3	WHITE/YELLOW	IX/XI	BLACK/RED	PLAIN/XI	X	6.3				6.3		
	S3-70	R1-1		STOP SIGN	30 x 30	6.3	RED	XI	WHITE	XI	X	6.3					6.3	
		W4-4P		CROSS TRAFFIC DOES NOT STOP	24 x 12	2.0	YELLOW	XI	BLACK	PLAIN	X	2.0					2.0	
SUBTOTAL SQ-19												86.7	60.9	69.8	28.0	91.2	154.2	

SIGN QUANTITIES SQ-19

CALCULATED-DESIGNED BY	CHECKED BY	REVISED BY	DATE REVISED
DIANNE A. GALVEZ	C. CHRES	SCV	05/03/18

CONSULTANT FUNCTIONAL SUPERVISOR: TIMOTHY J. LEE

STATE OF CALIFORNIA - DEPARTMENT OF TRANSPORTATION — Caltrans

LAST REVISION 01-15-18 | DATE PLOTTED => 6/20/2018 | TIME PLOTTED => 11:21:59 AM

X:\237_101_Mathilda\000_CAD\Sheets\OA-Signs\OC-Quantities\0413000204oc019.dgn

BORDER LAST REVISED 7/2/2010 | USERNAME => Eilif | DGN FILE => 0413000204oc019.dgn | RELATIVE BORDER SCALE IS IN INCHES 0 1 2 3 | UNIT 0000 | PROJECT NUMBER & PHASE 0413000204

Dist	COUNTY	ROUTE	POST MILES TOTAL PROJECT	SHEET No.	TOTAL SHEETS
04	SCL	101,237	45.2/45.8, 2.7/3.3	350	736

REGISTERED CIVIL ENGINEER — DATE 6-13-18

PLANS APPROVAL DATE 6-20-18

REGISTERED PROFESSIONAL ENGINEER — STEVE LOUPE — No. 63575 — Exp. 9/30/18 — CIVIL — STATE OF CALIFORNIA

THE STATE OF CALIFORNIA OR ITS OFFICERS OR AGENTS SHALL NOT BE RESPONSIBLE FOR THE ACCURACY OR COMPLETENESS OF SCANNED COPIES OF THIS PLAN SHEET.

WMH CORPORATION 50 W San Fernando St Suite 950 San Jose, CA 95113	VTA 3331 N First St Building B San Jose, Ca 95134

ROADSIDE SIGN PANEL QUANTITIES SUMMARY

SHEET No.	SIGN No.	SIGN CODE		SIGN MESSAGE/DESCRIPTION	SIGN PANEL SIZE	PANEL AREA	BACKGROUND		BORDER & LEGEND		PREMIUM PROTECTIVE FILM	FURNISH SINGLE SHEET ALUMINUM SIGN				RETROREFLECTIVE SHEETING (TYPE IX)	RETROREFLECTIVE SHEETING (TYPE XI)	REMARKS
							SHEETING COLOR	RETROREFLECTIVE ASTM TYPE	SHEETING COLOR	RETROREFLECTIVE ASTM TYPE		UNFRAMED		FRAMED				
		FEDERAL	CALIFORNIA		IN	SQFT						0.063"	0.080"	0.063"	0.080"	SQFT		
S-3	S3-71	R10-15		TURNING VEHICLES YIELD TO PEDS	30 x 30	6.3	WHITE/YELLOW	IX/XI	BLACK/RED	PLAIN/XI	X	6.3				6.3		
	S3-72	W11-2		PEDESTRIAN	30 x 30	6.3	YELLOW	XI	BLACK	PLAIN	X	6.3					6.3	
		W16-7P (L†)		DIAGONAL DOWNWARD ARROW (L†)	24 x 12	2.0	YELLOW	XI	BLACK	PLAIN	X	2.0					2.0	
	S3-73	W11-2		PEDESTRIAN	30 x 30	6.3	YELLOW	XI	BLACK	PLAIN	X	6.3					6.3	
		W16-7P (R†)		DIAGONAL DOWNWARD ARROW (R†)	24 x 12	2.0	YELLOW	XI	BLACK	PLAIN	X	2.0					2.0	
	S3-74	W11-2		PEDESTRIAN	30 x 30	6.3	YELLOW	XI	BLACK	PLAIN	X	6.3					6.3	
		W16-7P (L†)		DIAGONAL DOWNWARD ARROW (L†)	24 x 12	2.0	YELLOW	XI	BLACK	PLAIN	X	2.0					2.0	
	S3-75	W11-2		PEDESTRIAN	30 x 30	6.3	YELLOW	XI	BLACK	PLAIN	X	6.3					6.3	
		W16-7P (L†)		DIAGONAL DOWNWARD ARROW (L†)	24 x 12	2.0	YELLOW	XI	BLACK	PLAIN	X	2.0					2.0	
	S3-76		R49 (L†)	NO PED CROSSING USE CROSSWALK	42 x 18	5.3	WHITE	IX	BLACK	PLAIN	X	5.3				5.3		
	S3-78	R9-3		NO PEDESTRIAN CROSSING	18 x 18	2.3	WHITE	IX	BLACK/RED	PLAIN/XI	X	2.3				2.3		
	S3-79		R73-2	LEFT TURN/U-TURN	24 x 24	4.0	WHITE	IX	BLACK	PLAIN	X	4.0				4.0		
	S3-80	Spec 3A		TO 237 EAST AND MATHILDA WITH ARROWS	78 x 48	26.0	GREEN	XI	WHITE	XI	X			26.0			26.0	
	S3-82	R5-10c		NO PEDESTRIANS	24 x 12	2.0	WHITE	IX	BLACK	PLAIN	X	2.0				2.0		
	S3-83	R5-1		DO NOT ENTER	36 x 36	9.0	WHITE	IX	RED/WHITE	XI/XI	X	9.0				9.0		
		R5-1a		WRONG WAY	36 x 24	6.0	RED	XI	WHITE	XI	X	6.0					6.0	
	S3-84	W11-15		BICYCLE/PEDESTRIAN	36 x 36	9.0	YELLOW	XI	BLACK	PLAIN	X	9.0					9.0	
	S3-85	R4-7		KEEP RIGHT (SYMBOL)	24 x 30	5.0	WHITE	IX	BLACK	PLAIN	X	5.0				5.0		
	S3-86	R10-11		NO TURN ON RED	36 x 48	12.0	WHITE	IX	RED/BLACK	XI/PLAIN	X	12.0				12.0		
	S3-87	W11-15		BICYCLE/PEDESTRIAN	36 x 36	9.0	YELLOW	XI	BLACK	PLAIN	X	9.0					9.0	
	S3-88	R1-5 (L†)		YIELD TO PEDS (L†)	36 x 36	9.0	WHITE	IX	RED/BLACK	XI/PLAIN	X	9.0				9.0		
	S3-89		R26/R81	NO PARKING ANY TIME BIKE LANE/ BIKE WRONG WAY	12 x 18	1.5	WHITE/RED	IX/XI	WHITE/RED/BLACK	XI/XI/ PLAIN	X	1.5				1.5		PER C.O.S. 4E-2
	S3-90	W11-15		BICYCLE/PEDESTRIAN	36 x 36	9.0	YELLOW	XI	BLACK	PLAIN	X	9.0					9.0	
		W16-5P (R†)		SUPPLEMENTAL ARROW (R†)	24 x 18	3.0	YELLOW	XI	BLACK	PLAIN	X	3.0					3.0	
	S3-91	R1-5 (L†)		YIELD TO PEDS (L†)	36 x 36	9.0	WHITE	IX	BLACK/RED	PLAIN/XI	X	9.0				9.0		
		R9-3		NO PEDESTRIAN CROSSING	18 x 18	2.3	WHITE	IX	BLACK/RED	PLAIN/XI	X	2.3				2.3		
	S3-93		R61-1	INTERSECTION LANE CONTROL	30 x 30	6.3	WHITE	IX	BLACK	PLAIN	X	6.3				6.3		
	S3-94		R73-5	INTERSECTION LANE CONTROL	24 x 24	4.0	WHITE	IX	BLACK	PLAIN	X	4.0				4.0		
	S3-98		R61-11	INTERSECTION LANE CONTROL	36 x 30	7.5	WHITE	IX	BLACK	PLAIN	X	7.5				7.5		
	S3-99		G92	FREEWAY ENTRANCE	48 x 30	10	GREEN	XI	WHITE	XI	X		10.0				10.0	
			G28-2 (237)	STATE ROUTE MARKER (237)	28 x 25	4.9	GREEN	XI	WHITE	XI	X	4.9					4.9	
		M3-2		EAST	24 x 12	2.0	GREEN	XI	WHITE	XI	X	2.0					2.0	
		M6-2a (L†)		LEFT DIAGONAL ARROW AUXILIARY	21 x 15	2.2	GREEN	XI	WHITE	XI	X	2.2					2.2	
	S3-100		G92	FREEWAY ENTRANCE	48 x 30	10	GREEN	XI	WHITE	XI	X		10.0				10.0	
			G28-2 (237)	STATE ROUTE MARKER (237)	28 x 25	4.9	GREEN	XI	WHITE	XI	X	4.9					4.9	
		M3-2		EAST	24 x 12	2.0	GREEN	XI	WHITE	XI	X	2.0					2.0	
		M6-2a (R†)		RIGHT DIAGONAL ARROW AUXILIARY	21 x 15	2.2	GREEN	XI	WHITE	XI	X	2.2					2.2	
SUBTOTAL SQ-20												172.9	20.0	26.0		85.5	133.4	

SIGN QUANTITIES SQ-20

DIANNE A. GALVEZ	C. CHRES	SCV	05/03/18	
CALCULATED-DESIGNED BY	CHECKED BY	REVISED BY	DATE REVISED	

CONSULTANT FUNCTIONAL SUPERVISOR: TIMOTHY J. LEE

STATE OF CALIFORNIA - DEPARTMENT OF TRANSPORTATION — Caltrans®

X:\237_101_Mathilda\000_CAD\Sheet\VOA-Signs\QC-Quantities\0413000204oc020.dgn

LAST REVISION: 01-15-18 | DATE PLOTTED => 6/20/2018 | TIME PLOTTED => 11:22:03 AM

BORDER LAST REVISED 7/2/2010 | USERNAME => Eilif | DGN FILE => 0413000204oc020.dgn | RELATIVE BORDER SCALE IS IN INCHES 0 1 2 3 | UNIT 0000 | PROJECT NUMBER & PHASE 0413000204

Dist	COUNTY	ROUTE	POST MILES TOTAL PROJECT	SHEET No.	TOTAL SHEETS
04	SCL	101,237	45.2/45.8, 2.7/3.3	351	736

REGISTERED CIVIL ENGINEER — 6-13-18 DATE

6-20-18
PLANS APPROVAL DATE

STEVE LOUPE No. 63575 Exp. 9/30/18 CIVIL — REGISTERED PROFESSIONAL ENGINEER — STATE OF CALIFORNIA

THE STATE OF CALIFORNIA OR ITS OFFICERS OR AGENTS SHALL NOT BE RESPONSIBLE FOR THE ACCURACY OR COMPLETENESS OF SCANNED COPIES OF THIS PLAN SHEET.

WMH CORPORATION
50 W San Fernando St
Suite 950
San Jose, CA 95113

VTA
3331 N First St
Building B
San Jose, Ca 95134

ROADSIDE SIGN PANEL QUANTITIES SUMMARY

SHEET No.	SIGN No.	SIGN CODE FEDERAL	SIGN CODE CALIFORNIA	SIGN MESSAGE/DESCRIPTION	SIGN PANEL SIZE IN	PANEL AREA SQFT	BACKGROUND SHEETING COLOR	BACKGROUND RETROREFLECTIVE ASTM TYPE	BORDER & LEGEND SHEETING COLOR	BORDER & LEGEND RETROREFLECTIVE ASTM TYPE	PREMIUM PROTECTIVE FILM	FURNISH SINGLE SHEET ALUMINUM SIGN UNFRAMED 0.063" SQFT	UNFRAMED 0.080" SQFT	FRAMED 0.063" SQFT	FRAMED 0.080" SQFT	RETROREFLECTIVE SHEETING (TYPE IX)	RETROREFLECTIVE SHEETING (TYPE XI)	REMARKS
S-3	S3-103	R10-12		LEFT TURN YIELD ON GREEN	30 x 36	7.5	WHITE	IX	WHITE/GREEN	XI/XI	X	7.5				7.5		
	S3-106		R61-13	INTERSECTION LANE CONTROL	48 x 30	10.0	WHITE	IX	BLACK	PLAIN	X		10.0			10.0		
	S3-107		R49 (R†)	NO PED CROSSING USE CROSSWALK	42 x 18	5.3	WHITE	IX	BLACK	PLAIN	X	5.3				5.3		
	S3-108		R73-2	LEFT TURN/U-TURN	24 x 24	4.0	WHITE	IX	BLACK	PLAIN	X	4.0				4.0		
	S3-110		R49 (L†)	NO PED CROSSING USE CROSSWALK	42 x 18	5.3	WHITE	IX	BLACK	PLAIN	X	5.3				5.3		
	S3-111	R3-18		COMBINATION U-TURN & LEFT TURN PROHIBITION	24 x 24	4.0	WHITE	IX	BLACK/RED	PLAIN/XI	X	4.0				4.0		
	S3-112		G28-2 (237)	STATE ROUTE MARKER (237)	28 x 25	4.9	GREEN	XI	WHITE	XI	X	4.9					4.9	
		M3-4		WEST	24 x 12	2.0	GREEN	XI	WHITE	XI	X	2.0					2.0	
		M5-3 Mod		U-TURN	21 x 15	2.2	GREEN	XI	WHITE	XI	X	2.2					2.2	
	S3-113		G28-2 (237)	STATE ROUTE MARKER (237)	28 x 25	4.9	GREEN	XI	WHITE	XI	X	4.9					4.9	
		M3-2		EAST	24 x 12	2.0	GREEN	XI	WHITE	XI	X	2.0					2.0	
		M6-1 (L†)		LEFT ARROW AUXILIARY	21 x 15	2.2	GREEN	XI	WHITE	XI	X	2.2					2.2	
	S3-114		G28-2 (237)	STATE ROUTE MARKER (237)	28 x 25	4.9	GREEN	XI	WHITE	XI	X	4.9					4.9	
		M3-4		WEST	24 x 12	2.0	GREEN	XI	WHITE	XI	X	2.0					2.0	
		M5-3 Mod		U-TURN	21 x 15	2.2	GREEN	XI	WHITE	XI	X	2.2					2.2	
	S3-116	R3-18		COMBINATION U-TURN & LEFT TURN PROHIBITION	24 x 24	4.0	WHITE	IX	BLACK/RED	PLAIN/XI	X	4.0				4.0		
	S3-118		R26	NO PARKING ANYTIME	12 x 18	1.5	WHITE	IX	RED	XI	X	1.5				1.5		
	S3-120	W3-7		RAMP METER AHEAD	36 x 36	9.0	YELLOW	XI	BLACK	PLAIN	X	9.0					9.0	
	S3-121	W3-8		RAMP METERED WHEN FLASHING	36 x 36	9.0	YELLOW	XI	BLACK	PLAIN	X	9.0					9.0	
	S3-122	W3-8		RAMP METERED WHEN FLASHING	36 x 36	9.0	YELLOW	XI	BLACK	PLAIN	X	9.0					9.0	
	S3-123	R10-15 (R†)		TURNING VEHICLES YIELD TO PEDS	30 x 30	6.3	YELLOW/WHITE	XI/IX	BLACK/RED	PLAIN/XI	X	6.3				6.3		
	S3-124	R5-1		DO NOT ENTER	36 x 36	9.0	WHITE	IX	RED/WHITE	XI/XI	X	9.0				9.0		
		R5-1a		WRONG WAY	36 x 24	6.0	RED	XI	WHITE	XI	X	6.0					6.0	
	S3-125	R5-10a			30 x 36	7.5	WHITE	IX	BLACK	PLAIN	X	7.5				7.5		
	S3-126	R3-1		NO RIGHT TURN	36 x 36	9.0	WHITE	IX	BLACK/RED	PLAIN/XI	X	9.0				9.0		
	S3-128	R3-18		COMBINATION U-TURN & LEFT TURN PROHIBITION	24 x 24	4.0	WHITE	IX	BLACK/RED	PLAIN/XI	X	4.0				4.0		
			R73-2	LEFT TURN/U-TURN	24 x 24	4.0	WHITE	IX	BLACK	PLAIN	X	4.0				4.0		
	S3-129	R5-1		DO NOT ENTER	36 x 36	9.0	WHITE	IX	RED/WHITE	XI/XI	X	9.0				9.0		
		R5-1a		WRONG WAY	36 x 24	6.0	RED	XI	WHITE	XI	X	6.0					6.0	
	S3-130	R5-1		DO NOT ENTER	36 x 36	9.0	WHITE	IX	RED/WHITE	XI/XI	X	9.0				9.0		
		R5-1a		WRONG WAY	36 x 24	6.0	RED	XI	WHITE	XI	X	6.0					6.0	
	S3-131	R3-1		NO RIGHT TURN	36 x 36	9.0	WHITE	IX	BLACK/RED	PLAIN/XI	X	9.0				9.0		
	S3-133	R5-10c		NO PEDESTRIANS	24 x 12	2.0	WHITE	IX	BLACK	PLAIN	X	2.0				2.0		
	S3-134		R73-2	LEFT TURN/U-TURN	24 x 24	4.0	WHITE	IX	BLACK	PLAIN	X	4.0				4.0		
	S3-136		G92	FREEWAY ENTRANCE	48 x 30	10.0	GREEN	XI	WHITE	XI	X		10.0				10.0	
			G28-2 (237)	STATE ROUTE MARKER (237)	28 x 25	4.9	GREEN	XI	WHITE	XI	X	4.9					4.9	
		M3-4		WEST	24 x 12	2.0	WHITE	IX	BLACK	PLAIN	X	2.0				2.0		
		M6-2a		DIAGONAL ARROW AUXILIARY (R†)	21 x 15	2.2	WHITE	IX	BLACK	PLAIN	X	2.2				2.2		
SUBTOTAL SQ-21												185.8	20.0			118.6	87.2	

SIGN QUANTITIES SQ-21

DESIGNED BY	DIANNE A. GALVEZ				
CALCULATED-					
CHECKED BY	C. CHRES				
CONSULTANT FUNCTIONAL SUPERVISOR	TIMOTHY J. LEE				
DATE REVISED	05/03/18				
REVISED BY	SCV				

STATE OF CALIFORNIA - DEPARTMENT OF TRANSPORTATION

X:\237_101_Mathilda\000_CAD\Sheets\OA-Signs\OC-Quantities\0413000204oc021.dgn

LAST REVISION 01-15-18
DATE PLOTTED => 6/20/2018
TIME PLOTTED => 11:22:06 AM

BORDER LAST REVISED 7/2/2010 | USERNAME => Eilif, DGN FILE => 0413000204oc021.dgn | RELATIVE BORDER SCALE IS IN INCHES 0 1 2 3 | UNIT 0000 | PROJECT NUMBER & PHASE 0413000204

Dist	COUNTY	ROUTE	POST MILES TOTAL PROJECT	SHEET No.	TOTAL SHEETS
04	SCL	101,237	45.2/45.8, 2.7/3.3	352	736

REGISTERED CIVIL ENGINEER — 6-13-18 DATE

6-20-18
PLANS APPROVAL DATE

STEVE LOUPE No. 63575 Exp. 9/30/18 CIVIL — REGISTERED PROFESSIONAL ENGINEER — STATE OF CALIFORNIA

THE STATE OF CALIFORNIA OR ITS OFFICERS OR AGENTS SHALL NOT BE RESPONSIBLE FOR THE ACCURACY OR COMPLETENESS OF SCANNED COPIES OF THIS PLAN SHEET.

WMH CORPORATION
50 W San Fernando St
Suite 950
San Jose, CA 95113

VTA
3331 N First St
Building B
San Jose, Ca 95134

ROADSIDE SIGN PANEL QUANTITIES SUMMARY

SHEET No.	SIGN No.	SIGN CODE		SIGN MESSAGE/DESCRIPTION	SIGN PANEL SIZE	PANEL AREA	BACKGROUND		BORDER & LEGEND		PREMIUM PROTECTIVE FILM	FURNISH SINGLE SHEET ALUMINUM SIGN				RETROREFLECTIVE SHEETING (TYPE IX)	RETROREFLECTIVE SHEETING (TYPE XI)	REMARKS
							SHEETING COLOR	RETROREFLECTIVE ASTM TYPE	SHEETING COLOR	RETROREFLECTIVE ASTM TYPE		UNFRAMED		FRAMED				
												0.063"	0.080"	0.063"	0.080"			
		FEDERAL	CALIFORNIA		IN	SQFT						SQFT						
S-4	S4-6	R3-7 (Rt)		RIGHT LANE MUST TURN RIGHT	36 x 36	9.0	WHITE	IX	BLACK	PLAIN	X	9.0				9.0		
			R26/R81	NO PARKING ANY TIME BIKE LANE/ BIKE WRONG WAY	12 x 18	1.5	WHITE/RED	IX/XI	WHITE/RED/BLACK	XI/XI/ PLAIN	X	1.5				1.5		PER C.O.S. 4E-2
	S4-7		R26/R81	NO PARKING ANY TIME BIKE LANE/ BIKE WRONG WAY	12 x 18	1.5	WHITE/RED	IX/XI	WHITE/RED/BLACK	XI/XI/ PLAIN	X	1.5				1.5		PER C.O.S. 4E-2
			W74	THRU TRAFFIC MERGE LEFT	36 x 36	9.0	YELLOW	XI	BLACK	PLAIN	X	9.0					9.0	
	S4-9		R26/R81	NO PARKING ANY TIME BIKE LANE/ BIKE WRONG WAY	12 x 18	1.5	WHITE/RED	IX/XI	WHITE/RED/BLACK	XI/XI/ PLAIN	X	1.5				1.5		PER C.O.S. 4E-2
	S4-11		R61-15 Mod	INTERSECTION LANE CONTROL	48 x 30	10.0	WHITE	IX	BLACK	PLAIN	X		10.0			10.0		
	S4-12	W3-3		SIGNAL AHEAD (SYMBOL)	30 x 30	6.3	YELLOW	XI	BLACK/RED/GREEN	PLAIN/XI /XI	X		6.3				6.3	
		W16-9P		AHEAD	24 x 12	2.0	YELLOW	XI	BLACK	PLAIN	X	2.0					2.0	
	S4-13		R73-3	INTERSECTION LANE CONTROL	24 x 24	4.0	WHITE	IX	BLACK	PLAIN	X	4.0				4.0		
	S4-15	R3-4		NO U TURN	24 x 24	4.0	WHITE	IX	BLACK/RED	PLAIN/XI	X	4.0				4.0		
	S4-17		R73-3	INTERSECTION LANE CONTROL	24 x 24	4.0	WHITE	IX	BLACK	PLAIN	X	4.0				4.0		
	S4-19	R3-4		NO U TURN	24 x 24	4.0	WHITE	IX	BLACK/RED	PLAIN/XI	X	4.0				4.0		
	S4-22	W3-3		SIGNAL AHEAD (SYMBOL)	30 x 30	6.3	YELLOW	XI	BLACK/RED/GREEN	PLAIN/XI /XI	X		6.3				6.3	
		W16-9P		AHEAD	24 x 12	2.0	YELLOW	XI	BLACK	PLAIN	X	2.0					2.0	
S-5	S5-2	W1-1a (30) (Rt)		TURN WITH ADVISORY SPEED (30) (Rt)	48 x 48	16.0	YELLOW	XI	BLACK	PLAIN	X		16.0				16.0	
S-6	S6-2	E5-1a (396A)		EXIT 396A	126 x 60	52.5	GREEN	XI	WHITE	XI	X				52.5		52.5	
	S6-3		R18A	RIGHT LANE MUST EXIT	66 x 48	22.0	WHITE	IX	BLACK	PLAIN	X			22.0		22.0		
	S6-6		W34C (14'-11")	CAUTION VERTICAL CLEARANCE (14'-11")	48 x 72	24.0	YELLOW	XI	BLACK	PLAIN	X		24.0				24.0	
	S6-8	W1-3 (Lt)		REVERSE TURN (Rt)	30 x 30	6.3	YELLOW	XI	BLACK	PLAIN	X	6.3					6.3	
		W13-1P (20)		ADVISORY SPEED (20)	18 x 18	2.3	YELLOW	XI	BLACK	PLAIN	X	2.3					2.3	
	S6-9		R61-13	INTERSECTION LANE CONTROL	48 x 30	10.0	WHITE	IX	BLACK	PLAIN	X		10.0			10.0		
	S6-10		R61-13	INTERSECTION LANE CONTROL	48 x 30	10.0	WHITE	IX	BLACK	PLAIN	X		10.0			10.0		
	S6-11		G78-1	TO 237 WITH ARROW (Rt)	42 x 54	15.8	GREEN	XI	WHITE	XI	X	15.8					15.8	
	S6-12		G8-1	DOWNTOWN SUNNYVALE (LEFT ARROW)	66 x 30	13.8	GREEN	XI	WHITE	XI	X			13.8			13.8	
S-7	S7-1		W74 (Lt)	THRU TRAFFIC MERGE LEFT	60 x 60	25.0	YELLOW	XI	BLACK	PLAIN	X			25.0			25.0	
	S7-3		G86-5	DOWNTOWN SUNNYVALE NEXT EXIT	120 x 78	65.0	GREEN	XI	WHITE	XI	X				65.0		65.0	
	S7-4		G85-11	EXIT NUMBERED EXIT DIRECTION	120 x 66	55.0	GREEN	XI	WHITE	XI	X				55.0		55.0	
S-8	S8-1		R61-13	INTERSECTION LANE CONTROL	48 x 30	10.0	WHITE	IX	BLACK	PLAIN	X		10.0			10.0		
	S8-2		R61-13	INTERSECTION LANE CONTROL	48 x 30	10.0	WHITE	IX	BLACK	PLAIN	X		10.0			10.0		
	S8-4	Spec 8A		MOUNTAIN VIEW/SAN FRANCISCO, 237 WEST TO 101 WITH U-TURN ARROW	84 x 42	24.5	GREEN	XI	WHITE	XI	X				24.5		24.5	
	S8-6		G78-1	TO 101 WITH ARROW (Rt)	42 x 54	15.8	WHITE	IX	BLACK	PLAIN	X	15.8				15.8		
	S8-9	Spec 8B		TO 237 EAST AND MATHILDA WITH ARROWS	78 x 48	26.0	GREEN	XI	WHITE	XI	X			26.0			26.0	
	S8-10	R10-15 Mod (Rt)		YIELD TO BICYCLISTS (Rt)	30 x 30	6.3	YELLOW/WHITE	XI/IX	BLACK/RED	PLAIN/XI	X	6.3				6.3		
	S8-11	R1-5 (Lt)		YIELD HERE TO PEDS (Lt)	36 x 36	9.0	WHITE	IX	BLACK/RED	PLAIN/XI	X	9.0				9.0		
	S8-12	R1-5 (Lt)		YIELD HERE TO PEDS (Lt)	36 x 36	9.0	WHITE	IX	BLACK/RED	PLAIN/XI	X	9.0				9.0		
SUBTOTAL SQ-22												107.0	102.6	86.8	197.0	141.6	351.8	

SIGN QUANTITIES SQ-22

CALCULATED-DESIGNED BY	DIANNE A. GALVEZ	REVISED BY	SCV
CHECKED BY	C. CHRES	DATE REVISED	05/03/18
DISTRICT DIRECTOR	TIMOTHY J. LEE	CONSULTANT FUNCTIONAL SUPERVISOR	
STATE OF CALIFORNIA - DEPARTMENT OF TRANSPORTATION			

X:\237_101_Mathilde\000_CAD\Sheets\0A-Signs\OC-Quantities\0413000204oc022.dgn

LAST REVISION 01-15-18 | DATE PLOTTED => 6/20/2018 | TIME PLOTTED => 11:22:10 AM

BORDER LAST REVISED 7/2/2010 | USERNAME => Eilif | DGN FILE => 0413000204oc022.dgn | RELATIVE BORDER SCALE IS IN INCHES 0 1 2 3 | UNIT 0000 | PROJECT NUMBER & PHASE 0413000204

Dist	COUNTY	ROUTE	POST MILES TOTAL PROJECT	SHEET No.	TOTAL SHEETS
04	SCL	101,237	45.2/45.8, 2.7/3.3	353	736

REGISTERED CIVIL ENGINEER — 6-13-18 DATE

6-20-18
PLANS APPROVAL DATE

STEVE LOUPE No. 63575 Exp. 9/30/18 CIVIL — REGISTERED PROFESSIONAL ENGINEER — STATE OF CALIFORNIA

THE STATE OF CALIFORNIA OR ITS OFFICERS OR AGENTS SHALL NOT BE RESPONSIBLE FOR THE ACCURACY OR COMPLETENESS OF SCANNED COPIES OF THIS PLAN SHEET.

WMH CORPORATION
50 W San Fernando St
Suite 950
San Jose, CA 95113

VTA
3331 N First St
Building B
San Jose, Ca 95134

ROADSIDE SIGN PANEL QUANTITIES SUMMARY

SHEET No.	SIGN No.	SIGN CODE		SIGN MESSAGE/DESCRIPTION	SIGN PANEL SIZE	PANEL AREA	BACKGROUND		BORDER & LEGEND		PREMIUM PROTECTIVE FILM	FURNISH SINGLE SHEET ALUMINUM SIGN				RETROREFLECTIVE SHEETING (TYPE IX)	RETROREFLECTIVE SHEETING (TYPE XI)	REMARKS
							SHEETING COLOR	RETROREFLECTIVE ASTM TYPE	SHEETING COLOR	RETROREFLECTIVE ASTM TYPE		UNFRAMED		FRAMED				
												0.063"	0.080"	0.063"	0.080"			
		FEDERAL	CALIFORNIA		IN	SQFT						SQFT						
S-8	S8-13	R9-3		NO PEDESTRIAN CROSSING (SYMBOL)	18 x 18	2.3	WHITE	IX	BLACK/RED	PLAIN/XI	X	2.3				2.3		
		R9-7		SHARED USE PATH RESTRICTION	12 x 18	1.5	WHITE	IX	BLACK	PLAIN	X	1.5				1.5		
	S8-15	R10-10b		BICYCLE SIGNAL	12 x 18	1.5	WHITE	IX	BLACK	PLAIN	X	1.5				1.5		
		W161P		SHARE THE ROAD	18 x 24	3.0	YELLOW	XI	BLACK	PLAIN	X	3.0					3.0	
		M6-2 (Lt)		DIAGONAL ARROW AUXILIARY (Lt)	21 x 15	2.2	WHITE	IX	BLACK	PLAIN	X	2.2				2.2		
S-9	S9-7	W3-3		SIGNAL AHEAD (SYMBOL)	48 x 48	16.0	YELLOW	XI	BLACK/RED/GREEN	PLAIN/XI /XI	X		16.0				16.0	
	S9-10		R61-36 Mod	INTERSECTION LANE CONTROL	48 x 30	10.0	WHITE	IX	BLACK	PLAIN	X		10.0			10.0		
	S9-11		R61-36 Mod	INTERSECTION LANE CONTROL	48 x 30	10.0	WHITE	IX	BLACK	PLAIN	X		10.0			10.0		
	S9-14	E5-1a (3B)		EXIT 3B	90 x 60	37.5	GREEN	XI	WHITE	XI	X			37.5			37.5	
	S9-18	R2-1 (40)		SPEED LIMIT (40)	24 x 30	5.0	WHITE	IX	BLACK	PLAIN	X	5.0				5.0		
	S9-22	W11-15		BICYCLE/PEDESTRIAN	30 x 30	6.3	YELLOW	XI	BLACK	PLAIN	X	6.3					6.3	
	S9-27	R2-1 (40)		SPEED LIMIT (40)	24 x 30	5.0	WHITE	IX	BLACK	PLAIN	X	5.0				5.0		
	S9-28	W11-2		PEDESTRIAN	30 x 30	6.3	YELLOW	XI	BLACK	PLAIN	X	6.3					6.3	
		W16-7P (Lt)		DIAGONAL DOWNWARD ARROW (Lt)	24 x 12	2.0	YELLOW	XI	BLACK	PLAIN	X	2.0					2.0	
	S9-29	W11-2		PEDESTRIAN	30 x 30	6.3	YELLOW	XI	BLACK	PLAIN	X	6.3					6.3	
		W16-7P (Lt)		DIAGONAL DOWNWARD ARROW (Lt)	24 x 12	2.0	YELLOW	XI	BLACK	PLAIN	X	2.0					2.0	
	S9-30	W11-2		PEDESTRIAN	30 x 30	6.3	YELLOW	XI	BLACK	PLAIN	X	6.3					6.3	
		W16-7P (Rt)		DIAGONAL DOWNWARD ARROW (Rt)	24 x 12	2.0	YELLOW	XI	BLACK	PLAIN	X	2.0					2.0	
	S9-31	W11-2		PEDESTRIAN	30 x 30	6.3	YELLOW	XI	BLACK	PLAIN	X	6.3					6.3	
		W16-7P (Rt)		DIAGONAL DOWNWARD ARROW (Rt)	24 x 12	2.0	YELLOW	XI	BLACK	PLAIN	X	2.0					2.0	
	S9-32	W11-2		PEDESTRIAN	30 x 30	6.3	YELLOW	XI	BLACK	PLAIN	X	6.3					6.3	
		W16-9P		AHEAD	24 x 12	2.0	YELLOW	XI	BLACK	PLAIN	X	2.0					2.0	
	S9-33	W11-2		PEDESTRIAN	30 x 30	6.3	YELLOW	XI	BLACK	PLAIN	X	6.3					6.3	
		W16-9P		AHEAD	24 x 12	2.0	YELLOW	XI	BLACK	PLAIN	X	2.0					2.0	
	S9-37	W11-15		BICYCLE/PEDESTRIAN	30 x 30	6.3	YELLOW	XI	BLACK	PLAIN	X	6.3					6.3	
	S9-38	W11-15		BICYCLE/PEDESTRIAN	30 x 30	6.3	YELLOW	XI	BLACK	PLAIN	X	6.3					6.3	
	S9-39	R1-5 (Lt)		YIELD TO PEDS (Lt)	36 x 36	9.0	WHITE	IX	BLACK/RED	PLAIN/XI	X	9.0				9.0		
		R9-3		NO PEDESTRIAN CROSSING	18 x 18	2.3	WHITE	IX	BLACK/RED	PLAIN/XI	X	2.3				2.3		
	S9-40	R1-6		IN-STREET PEDESTRIAN CROSSING	12 x 36	3.0	YELLOW/ WHITE	XI/IX	BLACK/RED	PLAIN/XI	X	3.0					3.0	
	S9-41	R1-6		IN-STREET PEDESTRIAN CROSSING	12 x 36	3.0	YELLOW/ WHITE	XI/IX	BLACK/RED	PLAIN/XI	X	3.0					3.0	
	S9-42	W11-1		BICYCLE	30 x 30	6.3	YELLOW	XI	BLACK	PLAIN	X	6.3					6.3	
		W16-5P (Lt)		SUPPLEMENTAL ARROW (Lt)	24 x 18	3.0	YELLOW	XI	BLACK	PLAIN	X	3.0					3.0	
	S9-43		G85-11	EXIT NUMBERED EXIT DIRECTION	108 x 66	49.5	GREEN	XI	WHITE	XI	X				49.5		49.5	
	S9-45	W11-2		PEDESTRIAN	30 x 30	6.3	YELLOW	XI	BLACK	PLAIN	X	6.3					6.3	
		W16-9P		AHEAD	24 x 12	2.0	YELLOW	XI	BLACK	PLAIN	X	2.0					2.0	
	S9-47		R18A	RIGHT LANE MUST EXIT	66 x 48	22.0	WHITE	IX	BLACK	PLAIN	X			22.0		22.0		
SUBTOTAL SQ-23												124.1	36.0	59.5	49.5	70.8	198.3	

SIGN QUANTITIES SQ-23

REVISED BY	DATE REVISED
SCV	05/03/18

DESIGNED - DIANNE A. GALVEZ
CALCULATED - C. CHRES
CHECKED BY

CONSULTANT FUNCTIONAL SUPERVISOR - TIMOTHY J. LEE

STATE OF CALIFORNIA - DEPARTMENT OF TRANSPORTATION

Caltrans®

X:\237_101_Mathilda\000_CAD\Sheets\VA-Signs\QC-Quantities\0413000204oc023.dgn

LAST REVISION 01-15-18 | DATE PLOTTED => 6/20/2018 | TIME PLOTTED => 11:22:13 AM

BORDER LAST REVISED 7/2/2010 | USERNAME => Eilif | DGN FILE => 0413000204oc023.dgn | RELATIVE BORDER SCALE IS IN INCHES 0 1 2 3 | UNIT 0000 | PROJECT NUMBER & PHASE 0413000204

Dist	COUNTY	ROUTE	POST MILES TOTAL PROJECT	SHEET No.	TOTAL SHEETS
04	SCL	101,237	45.2/45.8, 2.7/3.3	354	736

REGISTERED CIVIL ENGINEER — 6-13-18 DATE

6-20-18
PLANS APPROVAL DATE

REGISTERED PROFESSIONAL ENGINEER — STEVE LOUPE — No. 63575 — Exp. 9/30/18 — CIVIL — STATE OF CALIFORNIA

THE STATE OF CALIFORNIA OR ITS OFFICERS OR AGENTS SHALL NOT BE RESPONSIBLE FOR THE ACCURACY OR COMPLETENESS OF SCANNED COPIES OF THIS PLAN SHEET.

WMH CORPORATION
50 W San Fernando St
Suite 950
San Jose, CA 95113

VTA
3331 N First St
Building B
San Jose, Ca 95134

ROADSIDE SIGN PANEL QUANTITIES SUMMARY

SHEET No.	SIGN No.	SIGN CODE		SIGN MESSAGE/DESCRIPTION	SIGN PANEL SIZE	PANEL AREA	BACKGROUND		BORDER & LEGEND		PREMIUM PROTECTIVE FILM	FURNISH SINGLE SHEET ALUMINUM SIGN				RETROREFLECTIVE SHEETING (TYPE IX)	RETROREFLECTIVE SHEETING (TYPE XI)	REMARKS
							SHEETING COLOR	RETROREFLECTIVE ASTM TYPE	SHEETING COLOR	RETROREFLECTIVE ASTM TYPE		UNFRAMED		FRAMED				
		FEDERAL	CALIFORNIA		IN	SQFT						0.063"	0.080"	0.063"	0.080"	SQFT		
SUBTOTAL SQ-23												124.1	36.0	59.5	49.5	70.8	198.3	
SUBTOTAL SQ-22												107.0	102.6	86.8	197.0	141.6	351.8	
SUBTOTAL SQ-21												185.8	20.0			118.6	87.2	
SUBTOTAL SQ-20												172.9	20.0	26.0		85.5	133.4	
SUBTOTAL SQ-19												86.7	60.9	69.8	28.0	91.2	154.2	
SUBTOTAL SQ-18												193.0	44.0		31.5	93.8	174.7	
SUBTOTAL SQ-17												187.9	26.8			106.6	108.1	
SUBTOTAL SQ-16												128.8	32.0	53.8		110.5	104.1	
SUBTOTAL SQ-15												158.1	45.8	15.0		117.1	101.8	
TOTAL												1344.3*	388.1	310.9	306.0	935.7	1413.6*	

(*) - QUANTITY INCLUDED IN OVERHEAD SIGN/OVERHEAD SIGN PANEL QUANTITIES TABLE

SIGN QUANTITIES
SQ-24

REVISED BY	DATE REVISED
SCV	05/03/18

CALCULATED-DESIGNED BY: DIANNE A. GALVEZ
CHECKED BY: C. CHRES

CONSULTANT FUNCTIONAL SUPERVISOR: TIMOTHY J. LEE

STATE OF CALIFORNIA - DEPARTMENT OF TRANSPORTATION

X:\237_101_Mathilda\000_CAD\Sheets\OA-Signs\QC-Quantities\0413000204oc024.dgn

LAST REVISION 01-15-18 | DATE PLOTTED => 6/20/2018 | TIME PLOTTED => 11:22:17 AM

BORDER LAST REVISED 7/2/2010 | USERNAME => Eilif | DGN FILE => 0413000204oc024.dgn | RELATIVE BORDER SCALE IS IN INCHES 0 1 2 3 | UNIT 0000 | PROJECT NUMBER & PHASE 0413000204

Dist	COUNTY	ROUTE	POST MILES TOTAL PROJECT	SHEET No.	TOTAL SHEETS
04	SCL	101,237	45.2/45.8, 2.7/3.3	355	736

REGISTERED CIVIL ENGINEER 6-13-18 DATE

6-20-18
PLANS APPROVAL DATE

REGISTERED PROFESSIONAL ENGINEER
STEVE LOUPE
No. 63575
Exp. 9/30/18
CIVIL
STATE OF CALIFORNIA

THE STATE OF CALIFORNIA OR ITS OFFICERS OR AGENTS SHALL NOT BE RESPONSIBLE FOR THE ACCURACY OR COMPLETENESS OF SCANNED COPIES OF THIS PLAN SHEET.

WMH CORPORATION
50 W San Fernando St
Suite 950
San Jose, CA 95113

VTA
3331 N First St
Building B
San Jose, Ca 95134

OVERHEAD SIGN QUANTITIES/OVERHEAD SIGN PANEL QUANTITIES SUMMARY

SHEET No.	SIGN No.	SIGN CODE	SIGN MESSAGE/DESCRIPTION	DIRECTION	PANEL SIZE L x D	AREA	BACKGROUND		LEGEND		PROTECTIVE FILM	FURNISH SINGLE SHEET ALUMINUM SIGN (0.063" UNFRAMED)	FURNISH LAMINATED PANEL SIGN (1"-TYPE A)	RETROREFLECTIVE SHEETING (TYPE XI)	INSTALL SIGN OVERLAY	REMOVE SIGN FROM SIGN FRAME	REMARKS
							SHEETING COLOR	RETROREFLECTIVE ASTM TYPE	SHEETING COLOR	RETROREFLECTIVE ASTM TYPE	PREMIUM						
					IN	SQFT						SQFT				EA	
S-2	OS2-2	G85-3 <CA>	237 WEST Mtn View LEFT LANE	FNBT	96 x 48	32	GREEN	XI	WHITE	XI	X		32	32			
		G85-3 <CA>	237 EAST Milpitas RIGHT LANE	FNBT	96 x 48	32	GREEN	XI	WHITE	XI	X		32	32			
S-3	OS3-1	G24-5 <CA>	237 WEST ONLY	FNBT												1	
		G24-6 <CA>	Moffett Park Dr WEST EAST "RIGHT LANE"	FNBT												1	
	OS3-2	G24-6 <CA>	Moffett Park Dr 237 WEST (LEFT TURN/U-TURN)	FNBT	144 x 80	80	GREEN	XI	WHITE	XI	X		80	80			EXTRA FRAME ON EXISTING SIGN FRAME WILL BE REMOVED.
		G24-6 <CA>	Moffett Park Dr LEFT TURN ARROW	FNBT	66 x 90	41	GREEN	XI	WHITE	XI	X		41	41			
S-4	OS4-1	G85-3 <CA>	237 EAST Milpitas LEFT LANE	FSBT	96 x 48	32	GREEN	XI	WHITE	XI	X		32	32			
		G85-3 <CA>	237 WEST Mtn View RIGHT LANE	FSBT	96 x 48	32	GREEN	XI	WHITE	XI	X		32	32			
S-5	OS5-1	OVERLAY	BLANK	FSBT	60 x 14	6	GREEN	XI			X	6		6	6		
S-6	OS6-1	G83-5 <CA>	EXIT 396 B Mathilda Ave SOUTH 1/4 MILE	FNBT												1	
		G85-11 <CA>	EXIT 396 A To EAST 237 Mathilda Ave NORTH	FNBT												1	
SUBTOTAL SQ-25												6	249	255	6	4	

SIGN QUANTITIES
SQ-25

Dist	COUNTY	ROUTE	POST MILES TOTAL PROJECT	SHEET No.	TOTAL SHEETS
04	SCL	101,237	45.2/45.8, 2.7/3.3	356	736

REGISTERED CIVIL ENGINEER — 6-13-18 DATE

6-20-18
PLANS APPROVAL DATE

REGISTERED PROFESSIONAL ENGINEER — STEVE LOUPE — No. 63575 — Exp. 9/30/18 — CIVIL — STATE OF CALIFORNIA

THE STATE OF CALIFORNIA OR ITS OFFICERS OR AGENTS SHALL NOT BE RESPONSIBLE FOR THE ACCURACY OR COMPLETENESS OF SCANNED COPIES OF THIS PLAN SHEET.

WMH CORPORATION
50 W San Fernando St
Suite 950
San Jose, CA 95113

VTA
3331 N First St
Building B
San Jose, Ca 95134

OVERHEAD SIGN QUANTITIES/OVERHEAD SIGN PANEL QUANTITIES SUMMARY

SHEET No.	SIGN No.	SIGN CODE	SIGN MESSAGE/DESCRIPTION	DIRECTION	PANEL SIZE L x D	AREA	BACKGROUND		LEGEND		PROTECTIVE FILM	FURNISH SINGLE SHEET ALUMINUM SIGN (0.063" UNFRAMED)	FURNISH LAMINATED PANEL SIGN (1"-TYPE A)	RETROREFLECTIVE SHEETING (TYPE XI)	INSTALL SIGN OVERLAY	REMOVE SIGN FROM SIGN FRAME	REMARKS
							SHEETING COLOR	RETROREFLECTIVE ASTM TYPE	SHEETING COLOR	RETROREFLECTIVE ASTM TYPE	PREMIUM	SQFT				EA	
					IN	SQFT											
S-6	OS6-2	G83-5 <CA>	EXIT 396 C WEST 237 Mtn View 3/4 MILE	FNBT	192 x 100	133	GREEN	XI	WHITE	XI	X		133	133			
		G85-11 <CA>	EXIT 396A To 237 MATHILDA Ave EXIT ONLY (2 DIAGONAL RIGHT ARROWS)	FNBT	264 x 100	183	GREEN	XI	WHITE	XI	X		183	183			
S-7	OS7-1	G23-5 <CA>	Mathilda Ave NORTH 237 EAST 1/4 Mathilda Ave SOUTH 1/2 JUNCTION 237 WEST 3/4 Ellis Street 1 1/2	FNBT												1	
	OS7-2	G23-5 <CA>	Mathilda Ave To 237 1/4 Mtn View 237 WEST 3/4 Ellis Street 1 1/2	FNBT	312 x 110	238	GREEN	XI	WHITE	XI	X		238	238			
S-8	OS8-1	W61C <CA>	EXIT ONLY	FEBT	104 x 26	19	YELLOW	XI	BLACK	PLAIN	X	19		19	19		
S-9	OS9-1	G85-11 <CA>	EXIT 3B SOUTH 101 Mathilda Ave Sunnyvale EXIT ONLY (DIAGONAL RIGHT ARROW)	FWBT												1	
	OS9-2	G85-11 <CA>	EXIT 3B To 101 Mathilda Ave EXIT ONLY (2 DIAGONAL RIGHT ARROWS)	FWBT	288 x 120	240	GREEN	XI	WHITE	XI	X		240	240			
SUBTOTAL SQ-26												19	794	813	19	2	

SIGN QUANTITIES
SQ- 26

REVISED BY	DATE REVISED
SCV	05/03/18

CALCULATED-DESIGNED BY: DIANNE A. GALVEZ
CHECKED BY: C. CHRES
CONSULTANT FUNCTIONAL SUPERVISOR: TIMOTHY J. LEE

STATE OF CALIFORNIA - DEPARTMENT OF TRANSPORTATION
Caltrans

X:\237_101_Mathilda\000_CAD\Sheets\OA-Signs\OC-Quantities\0413000204oc026.dgn

LAST REVISION 01-15-18
DATE PLOTTED => 6/20/2018
TIME PLOTTED => 11:22:24 AM

BORDER LAST REVISED 7/2/2010 | USERNAME => Eilif | DGN FILE => 0413000204oc026.dgn | RELATIVE BORDER SCALE IS IN INCHES 0 1 2 3 | UNIT 0000 | PROJECT NUMBER & PHASE 0413000204

Dist	COUNTY	ROUTE	POST MILES TOTAL PROJECT	SHEET No.	TOTAL SHEETS
04	SCL	101,237	45.2/45.8, 2.7/3.3	357	736

REGISTERED CIVIL ENGINEER — 6-13-18 DATE

6-20-18
PLANS APPROVAL DATE

STEVE LOUPE No. 63575 Exp. 9/30/18 CIVIL — REGISTERED PROFESSIONAL ENGINEER — STATE OF CALIFORNIA

THE STATE OF CALIFORNIA OR ITS OFFICERS OR AGENTS SHALL NOT BE RESPONSIBLE FOR THE ACCURACY OR COMPLETENESS OF SCANNED COPIES OF THIS PLAN SHEET.

WMH CORPORATION
50 W San Fernando St
Suite 950
San Jose, CA 95113

VTA
3331 N First St
Building B
San Jose, Ca 95134

OVERHEAD SIGN QUANTITIES/OVERHEAD SIGN PANEL QUANTITIES SUMMARY

SHEET No.	SIGN No.	SIGN CODE	SIGN MESSAGE/DESCRIPTION	DIRECTION	PANEL SIZE L x D	AREA	BACKGROUND		LEGEND		PROTECTIVE FILM	FURNISH SINGLE SHEET ALUMINUM SIGN (0.063" UNFRAMED)	FURNISH LAMINATED PANEL SIGN (1"-TYPE A)	RETROREFLECTIVE SHEETING (TYPE XI)	INSTALL SIGN OVERLAY	REMOVE SIGN FROM SIGN FRAME	REMARKS
							SHEETING COLOR	RETROREFLECTIVE ASTM TYPE	SHEETING COLOR	RETROREFLECTIVE ASTM TYPE	PREMIUM	SQFT				EA	
					IN	SQFT											
S-11	OS11-1	G83-5 <CA>	EXITS 396 A-B To EAST 237 MATHILDA Ave 3/4 MILE	FNBT												1	
	OS11-2	G83-5 <CA>	EXIT 396 A To 237 MATHILDA Ave 3/4 MILE	FNBT	264 x 100	183	GREEN	XI	WHITE	XI	X		183	183			
S-12	OS12-1	G23-3 <CA>	Fair Oaks Avenue 1/2 Mathilda Ave 237 EAST 1 1/2 Mathilda Ave SOUTH 1 3/4	FNBT												1	
	OS12-2	G23-3 <CA>	Fair Oaks Avenue 1/2 Mathilda Ave To 237 1 1/2 Mtn View 237 WEST 2 1/4	FNBT	288 x 90	180	GREEN	XI	WHITE	XI	X		180	180			
SUBTOTAL SQ-27												0	363	363	0	2	
SUBTOTAL SQ-26												19	794	813	19	2	
SUBTOTAL SQ-25												6	249	255	6	4	
FROM ROADSIDE SIGN PANEL QUANTITIES												1344.3		1414			
TOTAL												1369.3	1406	2845	25	8	

SIGN QUANTITIES
SQ-27

REVISED BY	SCV
DATE REVISED	05/03/18
DESIGNED BY	DIANNE A. GALVEZ
CALCULATED-	
CHECKED BY	C. CHRES
CONSULTANT FUNCTIONAL SUPERVISOR	TIMOTHY J. LEE
DEPARTMENT OF TRANSPORTATION	STATE OF CALIFORNIA - Caltrans

LAST REVISION 01-15-18 | DATE PLOTTED => 6/20/2018 | TIME PLOTTED => 11:22:29 AM

X:\237_101_Mathilda\000_CADSheets\QA-Signs\QC-Quantities\0413000204oc027.dgn

BORDER LAST REVISED 7/2/2010 | USERNAME => Eilif | DGN FILE => 0413000204oc027.dgn | RELATIVE BORDER SCALE IS IN INCHES 0 1 2 3 | UNIT 0000 | PROJECT NUMBER & PHASE 0413000204

Dist	COUNTY	ROUTE	POST MILES TOTAL PROJECT	SHEET No.	TOTAL SHEETS
04	SCL	101,237	45.2/45.8, 2.7/3.3	358	736

6-13-18
REGISTERED CIVIL ENGINEER DATE

6-20-18
PLANS APPROVAL DATE

REGISTERED PROFESSIONAL ENGINEER
STEVE LOUPE
No. 63575
Exp. 9/30/18
CIVIL
STATE OF CALIFORNIA

THE STATE OF CALIFORNIA OR ITS OFFICERS OR AGENTS SHALL NOT BE RESPONSIBLE FOR THE ACCURACY OR COMPLETENESS OF SCANNED COPIES OF THIS PLAN SHEET.

WMH CORPORATION
50 W San Fernando St
Suite 950
San Jose, CA 95113

VTA
3331 N First St
Building B
San Jose, Ca 95134

OVERHEAD SIGN STRUCTURE QUANTITIES SUMMARY

SHEET No.	SIGN No.	LOCATION		FURNISH SIGN STRUCTURE (LIGHTWEIGHT)	INSTALL SIGN STRUCTURE (LIGHTWEIGHT)	REMOVE SIGN STRUCTURE	REMOVE SIGN PANEL AND REMOVABLE SIGN PANEL FRAME	36" CIDH CONCRETE PILE (SIGN FOUNDATION)	STRUCTURE TYPE	POST TYPE
		STATION	DIRECTION	LBS		EA	EA	LF		
S-2	OS2-1	"M1" 38+11.40	NB				2			
	OS2-2	"M1" 48+51	NB	5161	5161			16	LIGHTWEIGHT	14 NPS "t" = 3/4"
	OS2-3	"M1" 50+10	NB			1				
S-4	OS4-1	"M1" 70+31.68	SB	5161	5161			16	LIGHTWEIGHT	14 NPS "t" = 3/4"
	OS4-2	"M1" 66+70	SB			1				
TOTAL				10322	10322	2	2	32		

SIGN QUANTITIES
SQ-28

DESIGNED BY	DIANNE A. GALVEZ	REVISED BY	SCV
CALCULATED-			
CHECKED BY	C. CHRES	DATE REVISED	05/03/18
SUPERVISOR	TIMOTHY J. LEE	CONSULTANT FUNCTIONAL	

STATE OF CALIFORNIA - DEPARTMENT OF TRANSPORTATION

X:\237_101_Mathilde\000_CADSheets\QA-Signs\QC-Quantities\0413000204oc028.dgn

LAST REVISION: DATE PLOTTED => 6/20/2018
01-15-18 TIME PLOTTED => 11:22:34 AM

BORDER LAST REVISED 7/2/2010 | USERNAME => Eilif | DGN FILE => 0413000204oc028.dgn | RELATIVE BORDER SCALE IS IN INCHES 0 1 2 3 | UNIT 0000 | PROJECT NUMBER & PHASE 0413000204

(N) - NOT A SEPARATE PAY ITEM, FOR INFORMATION ONLY.

CONCRETE REMOVAL

STATION LIMITS/ LOCATION					DIRECTION	REMOVE CONCRETE CURB, CURB AND GUTTER	REMOVE CONCRETE BARRIER	REMOVE CONCRETE SIDEWALK, CONCRETE PAVEMENT, CONCRETE MISCELLANEOUS
						LF		SQYD
"M1"	28+83.13	TO	"M1"	35+78.20	Rt	699		390
"M1"	29+64.25	TO	"M1"	35+24.55	Lt	1335		335
"M1"	36+23.51	TO	"M1"	45+09.36	Rt			563
"M1"	36+23.51	TO	"M1"	40+87.82	Rt	561		
"M1"	43+48.71	TO	"M1"	45+09.36	Rt	185		
"M5"	76+90.00	TO	"M5"	73+59.09	Rt	350		
"M5"	72+31.60	TO	"M6"	68+82.10	Rt,Lt	1012		25
"M1"	39+57.80	TO	"M1"	45+31.16	Lt			426
"M1"	39+57.80	TO	"M1"	41+09.09	Lt	105		
"M1"	43+68+62	TO	"M1"	45+31.16	Lt	90		
"M1"	45+12.74	TO	"M3"	75+00.00	Rt,Lt	847		209
"C"	373+47.25	TO	"M1"	45+10.42	Lt	824		
"M1"	45+10.42	TO	"M1"	50+50.80	Lt	549		
"M1"	45+00.00	TO	"M1"	52+90.11	Rt,Lt	1593		647
"M1"	48+53.66	TO	"M1"	52+85.37	Rt	265		485
"M1"	53+49.78	TO	"M1"	53+77.31	Rt	35		8
"D4R"	106+11.56	TO	"M1"	57+06.66	Lt	123		
"M1"	53+12.12	TO	"M1"	55+82.64	Lt	220		41
"M1"	53+89.64	TO	"M1"	56+51.26	Rt,Lt	597		174
"D5a"	5+34.10	TO	"D5a"	8+25.68	Rt			186
"D5a"	6+16.45	TO	"D5a"	8+35.20	Rt	400		
"D5a"	8+09.03	TO	"D5a"	8+87.20	Rt			116
"M1"	57+24.69	TO	"A3"	218+16.21	Rt	1138		139
"M1"	59+45.71	TO	"M1"	60+63.24	Lt			160
"M1"	59+74.40	TO	"D3"	10+89.48	Rt	437		167
"D3"	10+37.00	TO	"M1"	62+43.38	Rt	109		54
"M1"	62+17.77	TO	"M1"	70+95.71	Rt	2035		422
"M1"	62+00.00	TO	"M1"	71+50.00	Lt	600		722
"L6"	158+73.59	TO	"M1"	71+31.58	Lt	1203		700
"M3"	76+17.24	TO	"M3"	79+71.12	Lt	343		
"L6"	149+52.39	TO	"L6"	149+75.63	Lt			32
"L6"	149+70.88	TO	"L6"	158+37.68	Lt	865		
"L6"	149+87.45	TO	"L6"	155+02.97	Rt		519	
"B1"	67+73.72	TO	"B1"	68+58.92	Rt	70		39
"B1"	80+00.00	TO	"B1"	82+00.00	Rt,Lt	27		19
"A3"	213+71.08	TO	"A3"	220+48.80	Rt	675		
"D3"	10+89.48	TO	"B1"	58+72.12	Rt,Lt	1568		
"I1"	150+00.00	TO	"I1"	150+00.00	Rt	39		25
"I1"	168+84.45	TO	"I1"	169+89.26	Lt			62
FROM BARRIER REPLACEMENT QUANTITIES							556	
TOTAL						18899	1075	6146

SURVEY MONUMENTS

STATION LIMITS/ LOCATION	TYPE A	TYPE D
	EA	
"M1" 52+97.04, 69.47' Lt	1	
"M1" 53+30.04, 69.46' Lt		1
"M1" 62+18.45, 79.31' Rt	1	
"M1" 64+59.38, 2.00' Rt		1
"D3" 10+73.39, 49.83' Lt	1	
TOTAL	3	2

Dist	COUNTY	ROUTE	POST MILES TOTAL PROJECT	SHEET No.	TOTAL SHEETS
04	SCL	101,237	45.2/45.8, 2.7/3.3	359	736

6-13-18
REGISTERED CIVIL ENGINEER DATE

STEVE LOUPE No. 63575 Exp. 9/30/20 CIVIL — REGISTERED PROFESSIONAL ENGINEER — STATE OF CALIFORNIA

6-20-18
PLANS APPROVAL DATE

THE STATE OF CALIFORNIA OR ITS OFFICERS OR AGENTS SHALL NOT BE RESPONSIBLE FOR THE ACCURACY OR COMPLETENESS OF SCANNED COPIES OF THIS PLAN SHEET.

WMH CORPORATION
50 W San Fernando St
Suite 950
San Jose, CA 95113

VTA
3331 N First St
Building B
San Jose, Ca 95134

EARTHWORK QUANTITIES

STATION	ROADWAY EXCAVATION	ROADWAY EXCAVATION (TYPE COM AND TYPE R-1) (ADL)	REMOVE BASE AND SURFACING	EMBANKMENT (N)
	CY			
"M1" LINE	13300	652	361	850
"M2" LINE	1125		33	364
"M3" LINE	3100		91	2413
"M5" LINE	650			3500
"M6" LINE	1190		66	250
"C" LINE	1825			
"D3" LINE	2160		121	3164
"D5a" LINE	1111			72
"B1" LINE	450			9
"I1" LINE	80			
"L6" LINE	1400		9	1
"A3" LINE		418	292	
FROM DETOUR QUANTITIES	1251*			220
TOTAL	27642	1070	973	10843

* INCLUDES REMOVE ASPHALT CONCRETE DIKE

IRRIGATION CONDUIT QUANTITIES

SHEET No.	STATION	SIDE		8" CHDPE CONDUIT	8" WSP CONDUIT	3" PLASTIC PIPE (CLASS 315) (SUPPLY LINE)	CONTROL AND NEUTRAL CONDUCTORS 2" Elec CONDUIT
		Lt	Rt	LF			LS
L-1	"M1" 31+50	X	X	139		143	X
L-1	"M1" 36+17	X	X	95		99	X
L-1	"M5" 72+94	X	X	121		125	X
L-2	"C" 372+08	X	X		165	4	X
L-2	"M1" 43+64	X	X	109		113	X
L-2	"M1" 50+70	X	X	145		149	X
L-2	"M2" 68+29	X	X	120		124	X
L-2	"M2" 72+16	X	X	47		51	X
L-3	Ross Dr	X	X	88		92	X
L-3	"D5a" 8+78	X	X	63		67	X
L-3	"A3" 209+84	X	X		177	4	X
L-3	"D3" 10+00	X	X	87		91	X
L-5	"M5" 68+57	X	X	40		44	X
	TOTAL			1054	342	1106	

CHDPE - CORRUGATED HIGH DENSITY POLYETHYLENE PIPE
WSP - WELDED STEEL PIPE

SUMMARY OF QUANTITIES
Q-1

REVISED BY	SCV		
DATE REVISED	01/15/18		
CALCULATED-DESIGNED BY	SHAWN VOGTMAN		
CHECKED BY	STEVE LOUPE		
CONSULTANT FUNCTIONAL SUPERVISOR	TIMOTHY J. LEE		
STATE OF CALIFORNIA - DEPARTMENT OF TRANSPORTATION	Caltrans		

LAST REVISION 01-15-18
DATE PLOTTED => 12/3/2018
TIME PLOTTED => 12:22:05 PM

X:\237_101_Mathilda\000_CAD\Sheets\000_Submittals\Conformed Plans\0413000204pa001.dgn

BORDER LAST REVISED 7/2/2010 | USERNAME => eilif | DGN FILE => 0413000204pa001.dgn | RELATIVE BORDER SCALE IS IN INCHES 0 1 2 3 | UNIT 0000 | PROJECT NUMBER & PHASE 0413000204

(N) - NOT A SEPARATE PAY ITEM, FOR INFORMATION ONLY.

CONCRETE BARRIER

STATION LIMITS					LOC	(TYPE 60M)	(TYPE 60MC)	(TYPE 60MC Mod)	(TYPE 60MF Mod)	(TYPE 736B)	(TYPE 736B Mod)
						LF					
"M1"	32+04.03	TO	"M1"	34+54.89	R†						251
"M6"	65+02.77	TO	"M6"	67+80.00	L†		284				
"M1"	43+68.62	TO	"M1"	45+24.26	L†					156	
"M1"	45+24.26	TO	"M1"	47+24.23	L†		200				
"M3"	72+26.61	TO	"M3"	75+38.26	R†		309				
"D5a"	06+31.59	TO	"D5a"	08+27.84	L†						198
"D3"	10+92.96	TO	"D3"	12+92.00	L†		200				
"D3"	12+92.00	TO	"D3"	15+62.00	L†			270			
"D3"	15+62.00	TO	"B1"	58+21.44	L†		1140				
"C"	384+61.99	TO	"C"	385+61.95	L†				100		
"C"	385+66.95	TO	"C"	387+23.13	L†				157		
"D2"	98+53.90	TO	"D2"	104+22.55	L†	567					
TOTAL						567	2133	270	257	156	449

CRASH CUSHION

STATION	LOCATION	CRASH CUSHION (SMART)
		EA
"M1" 31+82.59	R†	1
"M1" 32+02.55	R†	1
"M3" 72+26.61	R†	1
"D5a" 6+87.75	L†	1
"A3 227+06.68	L†	1
TOTAL		5

ANTI-GRAFFITI COATING

LOCATION	SQFT
SOUND WALL No. 1	24768
MATHILDA Ave OC	3340
TOTAL	28108

MINOR CONCRETE

STATION LIMITS				MINOR CONCRETE (CURB)	MINOR CONCRETE (CITY CURB)	MINOR CONCRETE (BUS STOP)	MINOR CONCRETE (GUTTER)	MINOR CONCRETE (CURB AND GUTTER)	MINOR CONCRETE (CITY CURB AND GUTTER)	MINOR CONCRETE (ISLAND PAVING)	MINOR CONCRETE (CITY ISLAND PAVING)	MINOR CONCRETE (SIDEWALK)	MINOR CONCRETE (CITY SIDEWALK)	MINOR CONCRETE (CURB RAMP)	MINOR CONCRETE (CITY CURB RAMP)
FROM		TO		CY											
"M1"	28+83.93	"M1"	41+09.45		6				14				34		3
"M1"	30+87.62	"M1"	38+01.41	36				92		78		52		3	
"M1"	38+01.41	"M1"	40+50.00					14				18			
"M1"	40+50.00	"M1"	45+44.48					14				38		1	
"M1"	46+33.49	"M1"	51+50.00	27		51		10		53		51		1	
"M1"	51+50.00	"M1"	52+98.38	10				9		23		17		3	
"M1"	53+91.79	"M1"	56+07.57	11				9		19					
"D1"	81+00.00	"D1"	81+85.00						9						11
"D5a"	5+34.10	"D5a"	8+37.10					10	17			38	2	5	1
"D4R"	106+07.19	"D4R"	107+06.22					8							
"M1"	57+25.86	"M1"	61+10.09	6			6	19		13		29		2	
"M1"	62+01.13	"M1"	65+50.00	7	19				22	4	93		21	1	
"L6"	156+50.00	"L6"	160+72.97		13				18				8		
"M1"	65+50.00	"M1"	71+64.76		30				24	40			39		
"L6"	150+08.63	"L6"	156+50.00		18				31				3		
"B1"	58+72.08	"B1"	68+63.21		5				3		23		8		2
"I1"	168+60.12	"I1"	169+55.27						9						
TOTAL				97	91	51	6	185	148	230	116	243	115	17	17

Dist	COUNTY	ROUTE	POST MILES TOTAL PROJECT	SHEET No.	TOTAL SHEETS
04	SCL	101,237	45.2/45.8, 2.7/3.3	360	736

6-13-18
REGISTERED CIVIL ENGINEER DATE

STEVE LOUPE No. 63575 Exp. 9/30/20 CIVIL — REGISTERED PROFESSIONAL ENGINEER — STATE OF CALIFORNIA

6-20-18
PLANS APPROVAL DATE

THE STATE OF CALIFORNIA OR ITS OFFICERS OR AGENTS SHALL NOT BE RESPONSIBLE FOR THE ACCURACY OR COMPLETENESS OF SCANNED COPIES OF THIS PLAN SHEET.

WMH CORPORATION
50 W San Fernando St
Suite 950
San Jose, CA 95113

VTA
3331 N First St
Building B
San Jose, Ca 95134

SUMMARY OF QUANTITIES
Q-2

REVISED BY	DATE REVISED
SCV	01/15/18

CALCULATED-DESIGNED BY	CHECKED BY
SHAWN VOGTMAN	STEVE LOUPE

SUPERVISOR: TIMOTHY J. LEE
CONSULTANT FUNCTIONAL SUPERVISOR

STATE OF CALIFORNIA - DEPARTMENT OF TRANSPORTATION
Caltrans

LAST REVISION 01-15-18
DATE PLOTTED => 12/3/2018
TIME PLOTTED => 12:22:06 PM

X:\237_101_Mathilda\000_CAD\Sheets\000_Submittals\Conformed Plans\0413000204pa002.dgn

BORDER LAST REVISED 7/2/2010
USERNAME => eilif
DGN FILE => 0413000204pa002.dgn
RELATIVE BORDER SCALE IS IN INCHES 0 1 2 3
UNIT 0000
PROJECT NUMBER & PHASE 0413000204

(N) - NOT A SEPARATE PAY ITEM, FOR INFORMATION ONLY.
* VINYL-CLAD

FENCE QUANTITIES

SHEET No.	STATION LIMITS FROM		TO		LOCATION	REMOVE FENCE	REMOVE CHAIN LINK FENCE	5' CHAIN LINK GATE (TYPE CL-6) *	CHAIN LINK FENCE (TYPE CL-5)*	CHAIN LINK FENCE (TYPE CL-6)
						LF		EA	LF	
C-15. C-16	"M1"	38+00.22	"M1"	40+86.94	R+					287
C-16, C-17	"M1"	43+63.41	"M1"	45+20.95	R+					165
C-17, C-19	"M1"	47+96.26	M1"	52+68.25	R+					493
C-2	"M1"	40+87.82	"M1"	43+63.06	R+	278				
C-2	"M1"	40+92.56	"M1"	43+68.62	L+	278				
C-20, C-26	"M1"	59+32.45	"D3"	10+80.34	R+					252
L-3	"L6"	158+38.33	"L6"	158+70.95	L+			2		
C-24, C-25	"L6"	149+90.84	"L6"	155+53.63	R+				567	
C-24, C-25	"L6"	150+09.73	"L6"	158+38.33	L+				829	
C-20	"L6"	158+70.95	"L6"	160+20.26	L+				259	
L-3, L-9	"D3"	10+92.96	"A3"	227+08.68	L+				1604	
L-9	"A3"	227+06.68	"A3"	227+06.68	L+					2
C-3, C-8	"D3"	11+71.33	"B1"	227+23.75	Lt,Rt		1925			
L-8	"L6"	149+90.84	"L6"	155+53.94	R+				568	
TOTAL						556	1925	2	3827	1199

ROADWAY SUMMARY

STATION					DIRECTION	HMA (TYPE A)	RUBBERIZED HOT MIX ASPHALT (GAP GRADED)	TYPE III SLURRY SEAL	RSCB	CLASS 2 AGGREGATE BASE	COLD PLANE AC PAVEMENT	DECOMPOSED GRANITE (MISC AREAS)
						TON			CY		SQYD	SQFT
"M1"	28+83.93	TO	"M1"	41+09.45	R+/L+	1959.9					11614.1	
"M1"	28+83.93	TO	"M1"	41+09.45	R+/L+					116.2		
"M1"	28+83.93	TO	"M1"	30+27.38	R+/L+	412.3						
"M1"	28+83.93	TO	"M1"	30+27.00	R+/L+					21.5		
"M1"	31+08.57	TO	"M1"	38+03.87	R+/L+	283.6			547.0			
"M1"	30+83.91	TO	"M1"	41+09.52	L+	1329.2				144.4		
"M1"	30+78.78	TO	"M1"	35+78.31	R+	137.2	61.4			312.1		
"M1"	31+61.95	TO	"M1"	41+05.28	R+	163.5					291.8	
"M5"	67+97.31	TO	"M5"	73+34.04	R+/L+	768.1	343.6			1746.8		
"M6"	64+77.92	TO	"M6"	69+00.00	R+/L+	488.9	218.7			1111.8		
"M5"	67+85.64	TO	"M1"	68+06.30	R+	38.7					46.4	
"M6"	69+00.00	TO	"M6"	69+25.10	R+	62.1					74.5	
"M6"	69+25.10	TO	"M6"	70+04.00	R+			2.4				
"C"	370+66.53	TO	"C"	373+48.92	L+	40.9	14.5			96.8		
"M2"	72+39.85	TO	"M2"	73+85.08	R+/L+	236.8					284.1	
"M2"	67+72.92	TO	"M2"	73+50.09	R+/L+	700.9	313.6			1594.0		
"M3"	71+77.49	TO	"M3"	79+24.39	R+/L+	1274.3	570.1			2898.0		
"M3"	78+86.96	TO	"M3"	80+19.61	R+/L+	255.1					306.0	
"C"	380+19.12	TO	"C"	391+60.72	L+	866.9	307.0			2051.4		
"M1"	43+48.82	TO	"M1"	62+05.14	R+/L+	2641.5					15653.2	
"M1"	44+99.00	TO	"M1"	52+98.00	R+/L+	471.8			485.4			
"M1"	43+48.82	TO	"M1"	61+85.00	L+	2091.3					4131.0	
"M1"	43+48.82	TO	"M1"	51+61.00	L+	1221.4				132.7		
"M1"	53+87.00	TO	"M1"	56+53.00	R+/L+	196.7			202.3			
"M1"	56+10.72	TO	"M1"	56+55.21	L+	169.9						
"M1"	57+31.40	TO	"M1"	59+64.27	R+/L+	426.2						
"M1"	59+64.27	TO	"M1"	61+67.82	R+/L+	35.6			36.7			
"D2"	107+68.34	TO	"D2"	108+29.34	R+/L+	90.2	40.4			205.2		
"D2"	107+68.34	TO	"D2"	108+29.34	R+					0.3		
"L6"	159+00.00	TO	"L6"	160+73.38	R+					25.1		
"L6"	159+00.00	TO	"L6"	160+73.38	R+	415.7						
"L6"	161+00.00	TO	"M1"	62+50.00	L+					3.0		
"M1"	43+48.82	TO	"M1"	45+34.84	R+					22.4		
"M1"	46+93.18	TO	"M1"	50+05.13	R+	287.1						
"M1"	47+03.24	TO	"M1"	49+90.29	R+					50.7		
"M1"	46+59.26	TO	"M1"	52+95.00	R+					74.0		
"M1"	50+05.20	TO	"M1"	53+14.30	R+	658.4				71.5		
"M1"	53+52.21	TO	"M1"	56+80.00	R+					56.2		
"M1"	53+99.37	TO	"M1"	55+58.59	L+					6.6		
SUBTOTAL OF Q-3						17724.2	1869.3	2.4	1271.4	10740.7	32401.1	

Dist	COUNTY	ROUTE	POST MILES TOTAL PROJECT	SHEET No.	TOTAL SHEETS
04	SCL	101,237	45.2/45.8, 2.7/3.3	361	736

6-13-18
REGISTERED CIVIL ENGINEER DATE

STEVE LOUPE No. 63575 Exp. 9/30/20 CIVIL — REGISTERED PROFESSIONAL ENGINEER — STATE OF CALIFORNIA

6-20-18
PLANS APPROVAL DATE

THE STATE OF CALIFORNIA OR ITS OFFICERS OR AGENTS SHALL NOT BE RESPONSIBLE FOR THE ACCURACY OR COMPLETENESS OF SCANNED COPIES OF THIS PLAN SHEET.

WMH CORPORATION
50 W San Fernando St
Suite 950
San Jose, CA 95113

VTA
3331 N First St
Building B
San Jose, Ca 95134

SUMMARY OF QUANTITIES
Q-3

REVISED BY	DATE REVISED
SCV	01/15/18

CALCULATED-DESIGNED BY: SHAWN VOGTMAN
CHECKED BY: STEVE LOUPE
CONSULTANT FUNCTIONAL SUPERVISOR: TIMOTHY J. LEE
STATE OF CALIFORNIA - DEPARTMENT OF TRANSPORTATION
Caltrans

LAST REVISION 01-15-18 | DATE PLOTTED => 12/3/2018 | TIME PLOTTED => 12:22:07 PM

x:\237_101_Matrix\000_CAD\Sheets\000_Submittals\Conformed Plans\0413000204pa003.dgn

BORDER LAST REVISED 7/2/2010 | USERNAME => eilif | DGN FILE => 0413000204pa003.dgn | RELATIVE BORDER SCALE IS IN INCHES 0 1 2 3 | UNIT 0000 | PROJECT NUMBER & PHASE 0413000204

(N) - NOT A SEPARATE PAY ITEM, FOR INFORMATION ONLY.

ROADWAY SUMMARY (CONTINUED)

STATION					DIRECTION	HMA (TYPE A)	RUBBERIZED HOT MIX ASPHALT (GAP GRADED)	TYPE III SLURRY SEAL	RSCB	CLASS 2 AGGREGATE BASE	COLD PLANE AC PAVEMENT	DECOMPOSED GRANITE (MISC AREAS)
						TON			CY		SQYD	SQFT
"M1"	53+48.17	TO	"M1"	54+97.91	R†	136.8						
"M1"	53+81.41	TO	"D5a"	10+00.00	R†	282.4	126.4			642.3		
"M1"	53+81.41	TO	"D5a"	10+00.00	R†/L†	634.3					760.9	
"D5a"	5+12.71	TO	"D5a"	8+90.00	L†	223.3						
"D5a"	10+00.00	TO	"D5a"	10+37.62	R†/L†			1.5				
"D5a"	9+56.00	TO	"M1"	59+60.26	R†/L†	159.3						
"D4R"	106+07.20	TO	"M1"	56+95.79	R†/L†					4.2		
"M1"	57+25.00	TO	"M1"	61+08.59	R†					38.2		
"M1"	61+63.22	TO	"M1"	62+38.29	L†	14.0					83.2	
"M1"	61+85.28	TO	"M1"	71+64.63	L†	535.1					3170.7	
"M1"	61+73.05	TO	"M1"	71+64.63	R†/L†	2488.1				270.5		
"M1"	62+05.05	TO	"M1"	71+64.63	R†			42.2				
"M1"	59+60.32	TO	"M1"	62+04.97	R†	140.1				242.2		
"D3"	9+75.00	TO	"D3"	21+50.00	R†/L†	1363.6	610.1			3101.2		
"D3"	10+24.12	TO	"M1"	62+43.37	R†					13.7		
"D3"	18+22.00	TO	"D3"	21+51.00	R†	540.2					648.0	
"B1	59+71.00	TO	"B1"	69+76.89	R†/L†			33.3				
"B1	58+73.08	TO	"B1"	58+86.64	L†					1.6		
"B1	67+72.73	TO	"B1"	68+60.40	R†					21.8		
"B2	58+86.65	TO	"B1"	68+76.00	L†	908.4						
"D3"	10+92.96	TO	"D3"	17+39.27	L†					118.2	709.4	6385.0
"D3"	10+37.49	TO	"D3"	17+39.27	L†	203.9					1208.3	
"L6"	149+73.31	TO	"L6"	150+11.87	L†					2.7		
"L6"	150+11.74	TO	"M1"	61+70.94	L†	1103.8						
"L6"	158+00.00	TO	"L6"	159+00.00	L†					7.6		
"L6"	150+04.53	TO	"M1"	160+72.96	L†	763.7				83.0		
"M1"	61+87.22	TO	"M1"	71+64.65	L†	170.8					304.9	
"L6"	157+12.47	TO	"L6"	160+72.96	R†/L†	214.5					1271.2	
"L6"	147+55.53	TO	"L6"	161+25.37	R†/L†			50.1				
"D3"	9+78.00	TO	"D3"	10+37.49	L†	15.8					93.4	
"D3"	9+78.00	TO	"D3"	10+37.49	L†	47.2						
"M1"	62+38.29	TO	"M1"	71+64.65	L†					78.1		
"B1"	79+34.37	TO	"D5a"	83+13.00	R†/L†			19.7				
"B1"	81+00.00	TO	"D5a"	81+85.00	R†/L†					7.3		
"I1"	150+27.19	TO	"I1"	150+68.30	R†					3.8		
"I1"	150+27.19	TO	"I1"	150+68.30	R†	16.5						
"I1"	154+79.58	TO	"I1"	158+61.87	R†/L†			39.0				
"I1"	164+98.00	TO	"I1"	169+55.25	R†/L†			38.4				
"I1"	168+60.12	TO	"I1"	169+55.25	R†	19.3				33.3		
SUBTOTAL OF Q-4						9981.1	736.5	224.2		4669.7	8250.0	6385.0
SUBTOTAL OF Q-3						17724.2	1869.3	2.4	1271.4	10740.7	32401.1	
FROM PLACE HMA DIKE QUANTITIES						120.0						
FROM MAINTENANCE VEHICLE PULLOUT						175.8				129.6		
FROM DRAINAGE QUANTITIES						2.1						
FROM DETOUR QUANTITIES						2117.0						
GRAND TOTAL						30120.2	2605.8	226.6	1271.4	15540.0	40651.1	6385.0

GUARDRAIL SUMMARY

STATION			Loc	LAYOUT (N)	MGS (WOOD POST)	ALTERNATIVE FLARED END TERMINAL SYSTEM	ALTERNATIVE IN LINE TERMINAL SYSTEM	END ANCHOR ASSEMBLY (TYPE SFT)	REMOVE GUARDRAIL	VEGETATION CONTROL (MINOR CONCRETE)
					LF	EA			LF	SQYD
"M2" 71+47.36	TO	"M2" 72+95.00	R†	12A	152				113	
"C" 373+06.78	TO	"C" 372+03.11	L†	16B	104	1		1	172	
"C" 372+08+28	TO	"C" 373+35.18	R†	16B	126	1		1	172	
"A3" 221+56.04	TO	"A3" 222+59.17	L†	Std	353	1		1	71	
"M1" 47+24.23	TO	"M1" 50+52.02	L†	12A	374		1			
"C" 388+03.82	TO	"C" 388+96.73	L†	16A	85		1		93	42
TOTAL					1194	3	2	3	621	42

Dist	COUNTY	ROUTE	POST MILES TOTAL PROJECT	SHEET No.	TOTAL SHEETS
04	SCL	101,237	45.2/45.8, 2.7/3.3	362	736

6-13-18
REGISTERED CIVIL ENGINEER DATE

STEVE LOUPE No. 63575 Exp. 9/30/20 CIVIL — REGISTERED PROFESSIONAL ENGINEER — STATE OF CALIFORNIA

6-20-18
PLANS APPROVAL DATE

THE STATE OF CALIFORNIA OR ITS OFFICERS OR AGENTS SHALL NOT BE RESPONSIBLE FOR THE ACCURACY OR COMPLETENESS OF SCANNED COPIES OF THIS PLAN SHEET.

WMH CORPORATION
50 W San Fernando St
Suite 950
San Jose, CA 95113

VTA
3331 N First St
Building B
San Jose, Ca 95134

PLACE HMA DIKE

STATION		Loc		PLACE HMA DIKE TYPE E	* HMA (TYPE A)
FROM	TO	L†	R†	LF	TON
"M1" 37+24.02	"M5" 68+09.99		X	610	20
"M5" 68+02.31	"M5" 70+48.28	X		255	10
"M1" 39+51.60	"M6" 69+00.00		X	375	15
"M3" 72+21.48	"M3" 72+85.01	X		65	5
"M2" 68+71.84	"M2" 72+39.85		X	315	10
FROM DETOUR QUANTITIES				2125	60
TOTAL				3745	120

* FOR TOTAL QUANTITY, SEE ROADWAY SUMMARY

SUBGRADE ENHANCEMENT GEOTEXTILE

STATION LIMITS					SUBGRADE ENHANCEMENT GEOTEXTILE CLASS B1
					SQYD
"M1"	30+78.78	TO	"M1"	35+78.31	535.0
"M5"	67+97.31	TO	"M5"	73+34.04	2994.4
"M6"	64+77.92	TO	"M6"	69+00.00	1905.9
"C"	370+66.53	TO	"C"	373+48.92	126.3
"M1"	30+83.91	TO	"M1"	41+09.52	1312.8
"M5"	67+72.92	TO	"M5"	73+50.09	2732.6
"M1"	50+05.20	TO	"M1"	53+14.30	650.2
"M3"	71+77.49	TO	"M3"	79+24.39	4968.0
"C"	380+19.12	TO	"C"	391+60.72	2675.8
"M1"	43+48.82	TO	"M1"	51+61.00	1206.3
"M1"	56+10.72	TO	"M1"	56+55.21	100.7
"D2"	107+68.34	TO	"D2"	108+29.34	351.8
"M1"	53+81.41	TO	"D5"	10+00.00	1101.1
"M1"	61+73.05	TO	g	71+64.63	2459.4
"M1"	59+60.32	TO	"M1"	62+04.97	346.0
"D3"	9+75.00	TO	"D3"	21+50.00	5316.4
"L6"	150+04.53	TO	"M1"	160+72.96	641.6
"I1"	168+60.12	TO	"I1"	169+55.25	47.6
TOTAL					29472

SUMMARY OF QUANTITIES Q-4

LAST REVISION 01-15-18 DATE PLOTTED => 12/3/2018 TIME PLOTTED => 12:22:09 PM

CALCULATED-DESIGNED BY	SHAWN VOGTMAN	REVISED BY	SCV
CHECKED BY	STEVE LOUPE	DATE REVISED	01/15/18
CONSULTANT FUNCTIONAL SUPERVISOR	TIMOTHY J. LEE		

STATE OF CALIFORNIA - DEPARTMENT OF TRANSPORTATION

X:\237_101_Mathilda\000_CAD\Sheets\000_Submittals\Conformed Plans\0413000204pa004.dgn

BORDER LAST REVISED 7/2/2010 | USERNAME => eilif | DGN FILE => 0413000204pa004.dgn | RELATIVE BORDER SCALE IS IN INCHES 0 1 2 3 | UNIT 0000 | PROJECT NUMBER & PHASE 0413000204

(N) - NOT A SEPARATE PAY ITEM, FOR INFORMATION ONLY.

Dist	COUNTY	ROUTE	POST MILES TOTAL PROJECT	SHEET No.	TOTAL SHEETS
04	SCL	101,237	45.2/45.8, 2.7/3.3	363	736

6-13-18
REGISTERED CIVIL ENGINEER DATE

REGISTERED PROFESSIONAL ENGINEER
STEVE LOUPE
No. 63575
Exp. 9/30/20
CIVIL
STATE OF CALIFORNIA

6-20-18
PLANS APPROVAL DATE

THE STATE OF CALIFORNIA OR ITS OFFICERS OR AGENTS SHALL NOT BE RESPONSIBLE FOR THE ACCURACY OR COMPLETENESS OF SCANNED COPIES OF THIS PLAN SHEET.

WMH CORPORATION
50 W San Fernando St
Suite 950
San Jose, CA 95113

VTA
3331 N First St
Building B
San Jose, Ca 95134

BARRIER REPLACEMENT SUMMARY

LOCATION	SPALL REPAIR (POLYESTER CONCRETE)	* FRACTURED RIB TEXTURE	DRILL AND BOND (DOWEL BAR)	REMOVE CONCRETE BARRIER	**CHAIN LINK RAILING TYPE 7	CONCRETE BARRIER TYPE 732SW (Mod)	CONCRETE BARRIER TYPE 736 (Mod)	CONCRETE BARRIER TYPE 736A (Mod)	TUBULAR HAND RAILING	DRILL AND BOND DOWEL
	SQYD	SF	EA	LF						
US 101 OC	89	1019	1776	556	278	278	242	36	278	806
TOTAL	89	1019	1776	556	278	278	242	36	278	806

* FOR TOTAL QUANTITY, SEE RETAINING WALL SUMMARY

** VINYL-CLAD

RETAINING WALL SUMMARY

LOCATION	STRUCTURE EXCAVATION (SOUND WALL)	STRUCTURE BACKFILL (SOUND WALL)	STRUCTURAL CONCRETE (SOUND WALL)	PERVIOUS BACKFILL MATERIAL	MINOR CONCRETE (SOUND WALL)	LEAN CONCRETE BACKFILL	REINFORCING STEEL, RETAINING WALL (SOUND WALL)	FRACTURED RIB TEXTURE	SOUND WALL (MASONRY BLOCK)	24" CAST-IN-DRILLED-HOLE CONCRETE PILING (SOUNDWALL)	CONCRETE BARRIER TYPE 60MD (Mod)	CONCRETE BARRIER TYPE 736 (Mod)	CONCRETE BARRIER (TYPE 736SV)
	CY						LB	SF		LF			
RW No. 1	2209	1592	550	23	18	672	73090	934	5416	300	352	288	96
FROM BARRIER REPLACEMENT QUANTITIES								1019					
TOTAL	2209	1592	550	23	18	672	73090	1953	5416	300	352	288	96

MAINTENANCE VEHICLE PULLOUT

STATION LIMITS				HOT MIX ASPHALT (TYPE A)	CLASS 2 AGGREGATE BASE
From		To		TON	CY
"M5"	71+91.90	"M5"	72+62.74	29.3	21.6
"M6"	65+32.41	"M6"	132+27.70	29.3	21.6
"M2"	70+24.47	"M2"	71+30.96	29.3	21.6
"D5a"	8+80.21	"D5a"	9+47.03	29.3	21.6
"C"	369+84.54	"C"	370+69.54	29.3	21.6
"D3"	10+80.34	"D3"	11+65.21	29.3	21.6
TOTAL				175.8*	129.6*

(*) - QUANTITY INCLUDED IN ROADWAY SUMMARY TABLE.

REMOVE AC DIKE

STATION LIMITS				DIRECTION	REMOVE ASPHALT CONCRETE DIKE
FROM		TO			LF
"M1"	35+66.56	"M5"	67+06.23	L+	735
"M1"	38+57.80	"M6"	69+82.10	R+	334
"M1"	374+51.08	"M1"	45+09.36	L+	450
101 LOOP OFF-RANP				N/A	483
"M1"	48+53.66	"M3"	79+27.40	R+	836
"M3"	75+00.00	"M3"	76+17.24	R+	158
"A3"	217+89.21	"CCM"	218+08.76	EB	20
FROM DETOUR QUANTITIES					2,090
TOTAL					5,106

SUMMARY OF QUANTITIES
Q-5

REVISED BY	DATE REVISED
SCV	01/15/18

CALCULATED-DESIGNED BY: SHAWN VOGTMAN
CHECKED BY: STEVE LOUPE
CONSULTANT FUNCTIONAL SUPERVISOR: TIMOTHY J. LEE
STATE OF CALIFORNIA - DEPARTMENT OF TRANSPORTATION
Caltrans

LAST REVISION 01-15-18
DATE PLOTTED => 12/3/2018
TIME PLOTTED => 12:22:10 PM

x:\237_101_Morgan Hill\000_CAD\Sheets\000_Submittals\Conformed Plans\0413000204pa005.dgn

BORDER LAST REVISED 7/2/2010
USERNAME => eilif
DGN FILE => 0413000204pa005.dgn
RELATIVE BORDER SCALE IS IN INCHES 0 1 2 3
UNIT 0000
PROJECT NUMBER & PHASE 0413000204

Dist	COUNTY	ROUTE	POST MILES TOTAL PROJECT	SHEET No.	TOTAL SHEETS
04	SCL	101,237	45.2/45.8, 2.7/3.3	364	736

REGISTERED CIVIL ENGINEER 6-13-18 DATE

6-20-18
PLANS APPROVAL DATE

REGISTERED PROFESSIONAL ENGINEER STEVE LOUPE No. 63575 Exp. 9/30/18 CIVIL STATE OF CALIFORNIA

THE STATE OF CALIFORNIA OR ITS OFFICERS OR AGENTS SHALL NOT BE RESPONSIBLE FOR THE ACCURACY OR COMPLETENESS OF SCANNED COPIES OF THIS PLAN SHEET.

WMH CORPORATION
50 W San Fernando St
Suite 950
San Jose, CA 95113

VTA
3331 N First St
Building B
San Jose, Ca 95134

NOTE:
FOR ACCURATE RIGHT OF WAY DATA, CONTACT RIGHT OF WAY ENGINEERING AT THE DISTRICT OFFICE.

LEGEND:

○ EXISTING TREE TO REMAIN

⊠ EXISTING TREE TO BE REMOVED

TREE ID NUMBER

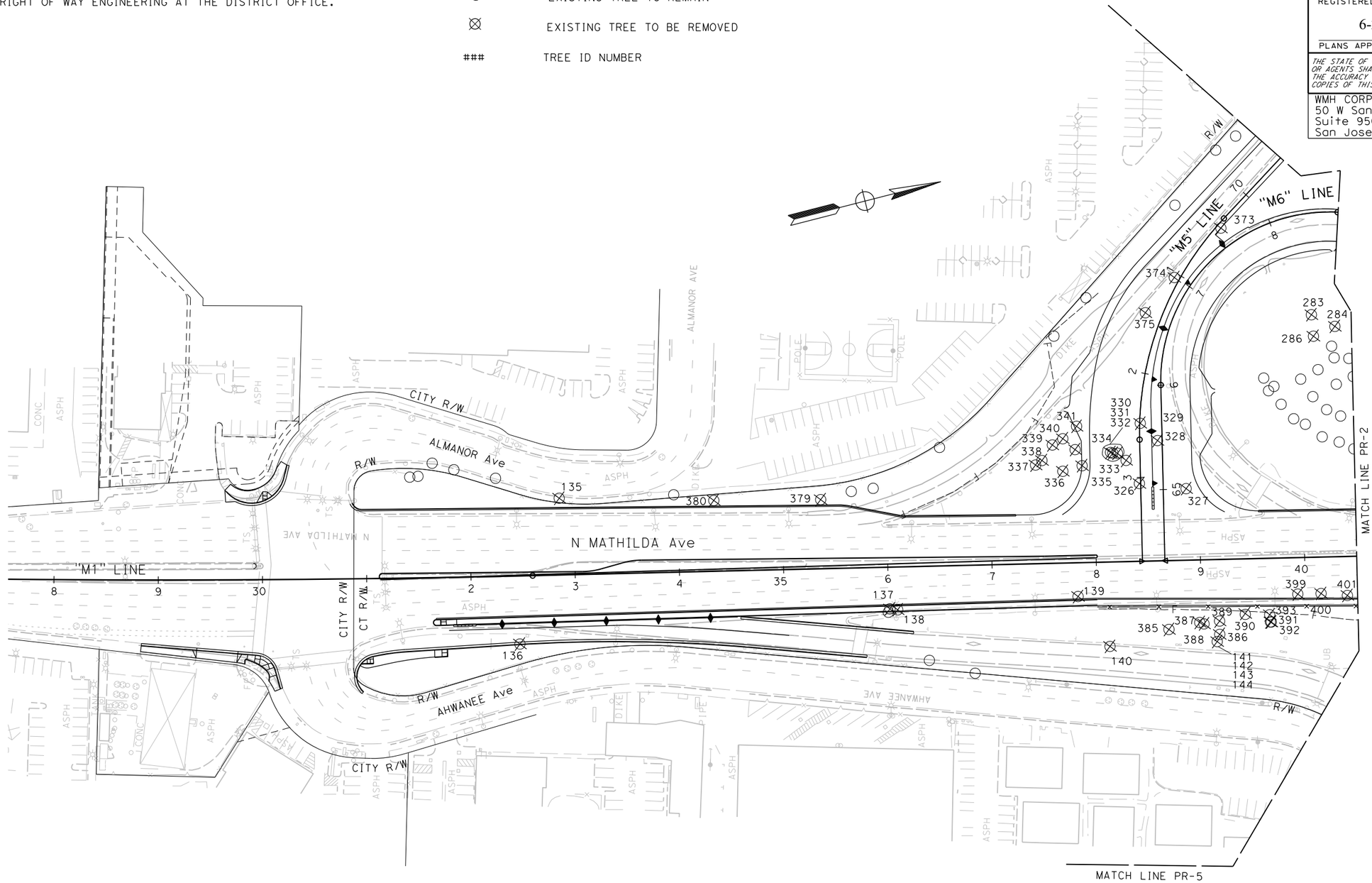

PLANT REMOVAL PLAN

SCALE: 1" = 50'

PR-1

STATE OF CALIFORNIA - DEPARTMENT OF TRANSPORTATION	Caltrans
CONSULTANT FUNCTIONAL SUPERVISOR	TIMOTHY J. LEE
CALCULATED-DESIGNED BY	SHAWN VOGTMAN
CHECKED BY	STEVE LOUPE
REVISED BY	YV
DATE REVISED	07/13/17
	SCV
	05/03/18

X:\237_101_Mathilda\000_CAD\Sheets\SE-Plant Removal\0413000204se001.dgn

LAST REVISION 01-15-18 DATE PLOTTED => 6/20/2018 TIME PLOTTED => 11:24:00 AM

NOTE:

FOR ACCURATE RIGHT OF WAY DATA, CONTACT
RIGHT OF WAY ENGINEERING AT THE DISTRICT OFFICE.

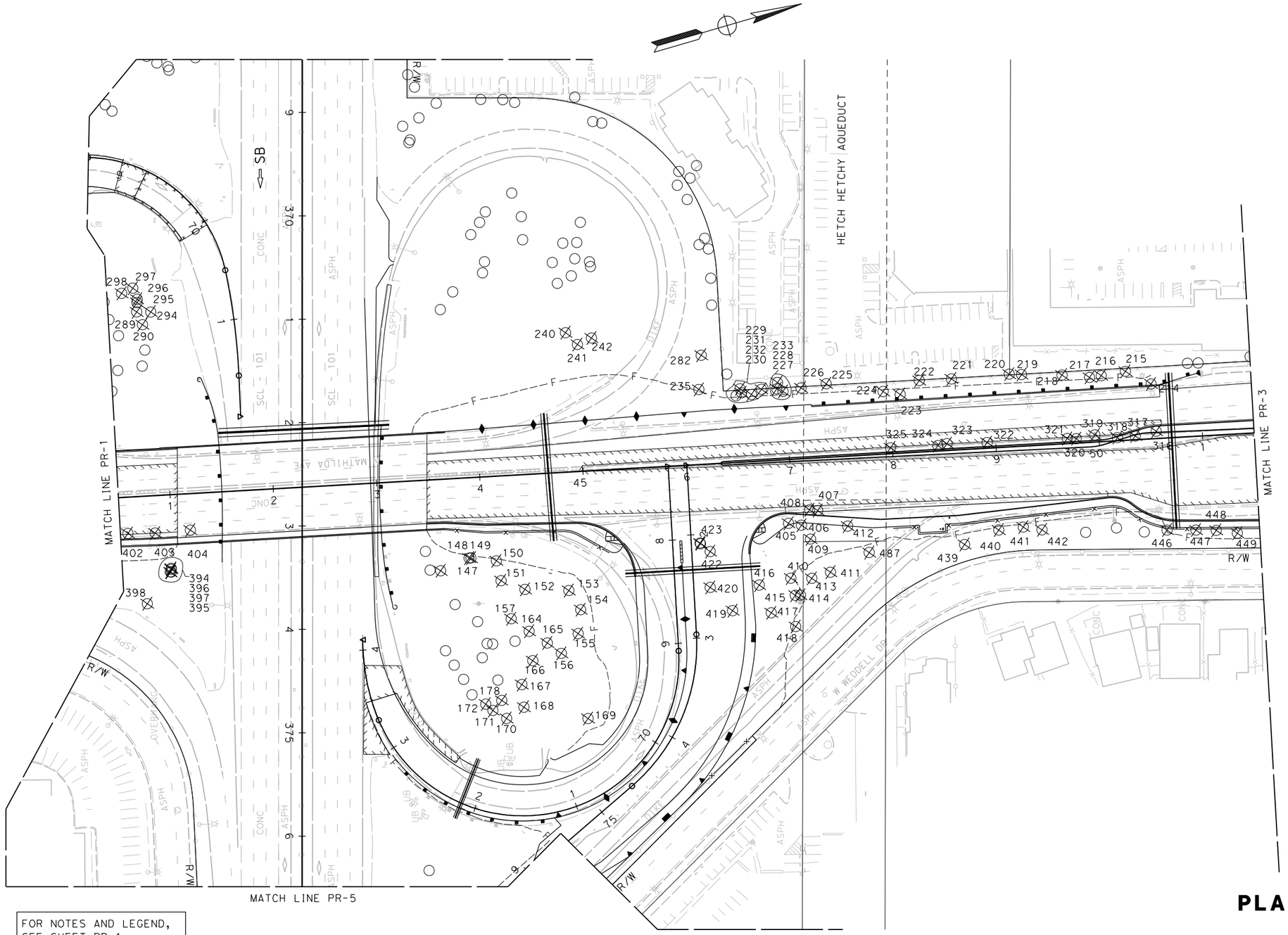

FOR NOTES AND LEGEND,
SEE SHEET PR-1

PLANT REMOVAL PLAN

SCALE: 1" = 50'

PR-2

Dist	COUNTY	ROUTE	POST MILES TOTAL PROJECT	SHEET No.	TOTAL SHEETS
04	SCL	101,237	45.2/45.8, 2.7/3.3	365	736

6-13-18
REGISTERED CIVIL ENGINEER — DATE

6-20-18
PLANS APPROVAL DATE

REGISTERED PROFESSIONAL ENGINEER
STEVE LOUPE
No. 63575
Exp. 9/30/18
CIVIL
STATE OF CALIFORNIA

THE STATE OF CALIFORNIA OR ITS OFFICERS OR AGENTS SHALL NOT BE RESPONSIBLE FOR THE ACCURACY OR COMPLETENESS OF SCANNED COPIES OF THIS PLAN SHEET.

WMH CORPORATION 50 W San Fernando St Suite 950 San Jose, CA 95113	VTA 3331 N First St Building B San Jose, Ca 95134

		SCV	05/03/18
		YV	07/13/17
		REVISED BY	DATE REVISED
CALCULATED-DESIGNED BY	SHAWN VOGTMAN		
CHECKED BY	STEVE LOUPE		
DRAWN BY	CONSULTANT FUNCTIONAL SUPERVISOR		
	TIMOTHY J. LEE		

STATE OF CALIFORNIA - DEPARTMENT OF TRANSPORTATION
Caltrans

LAST REVISION 01-15-18
DATE PLOTTED => 6/20/2018
TIME PLOTTED => 11:24:04 AM

X:\237_101_Mathilda\000_CAD\Sheets\SE-Plant Removal\0413000204se002.dgn

BORDER LAST REVISED 7/2/2010 | USERNAME => Eilif | DGN FILE => 0413000204se002.dgn | RELATIVE BORDER SCALE IS IN INCHES 0 1 2 3 | UNIT 0000 | PROJECT NUMBER & PHASE 0413000204

NOTE:

FOR ACCURATE RIGHT OF WAY DATA, CONTACT RIGHT OF WAY ENGINEERING AT THE DISTRICT OFFICE.

Dist	COUNTY	ROUTE	POST MILES TOTAL PROJECT	SHEET No.	TOTAL SHEETS
04	SCL	101,237	45.2/45.8, 2.7/3.3	366	736

REGISTERED CIVIL ENGINEER 6-13-18 DATE

6-20-18

PLANS APPROVAL DATE

REGISTERED PROFESSIONAL ENGINEER STEVE LOUPE No. 63575 Exp. 9/30/18 CIVIL STATE OF CALIFORNIA

THE STATE OF CALIFORNIA OR ITS OFFICERS OR AGENTS SHALL NOT BE RESPONSIBLE FOR THE ACCURACY OR COMPLETENESS OF SCANNED COPIES OF THIS PLAN SHEET.

WMH CORPORATION
50 W San Fernando St
Suite 950
San Jose, CA 95113

VTA
3331 N First St
Building B
San Jose, Ca 95134

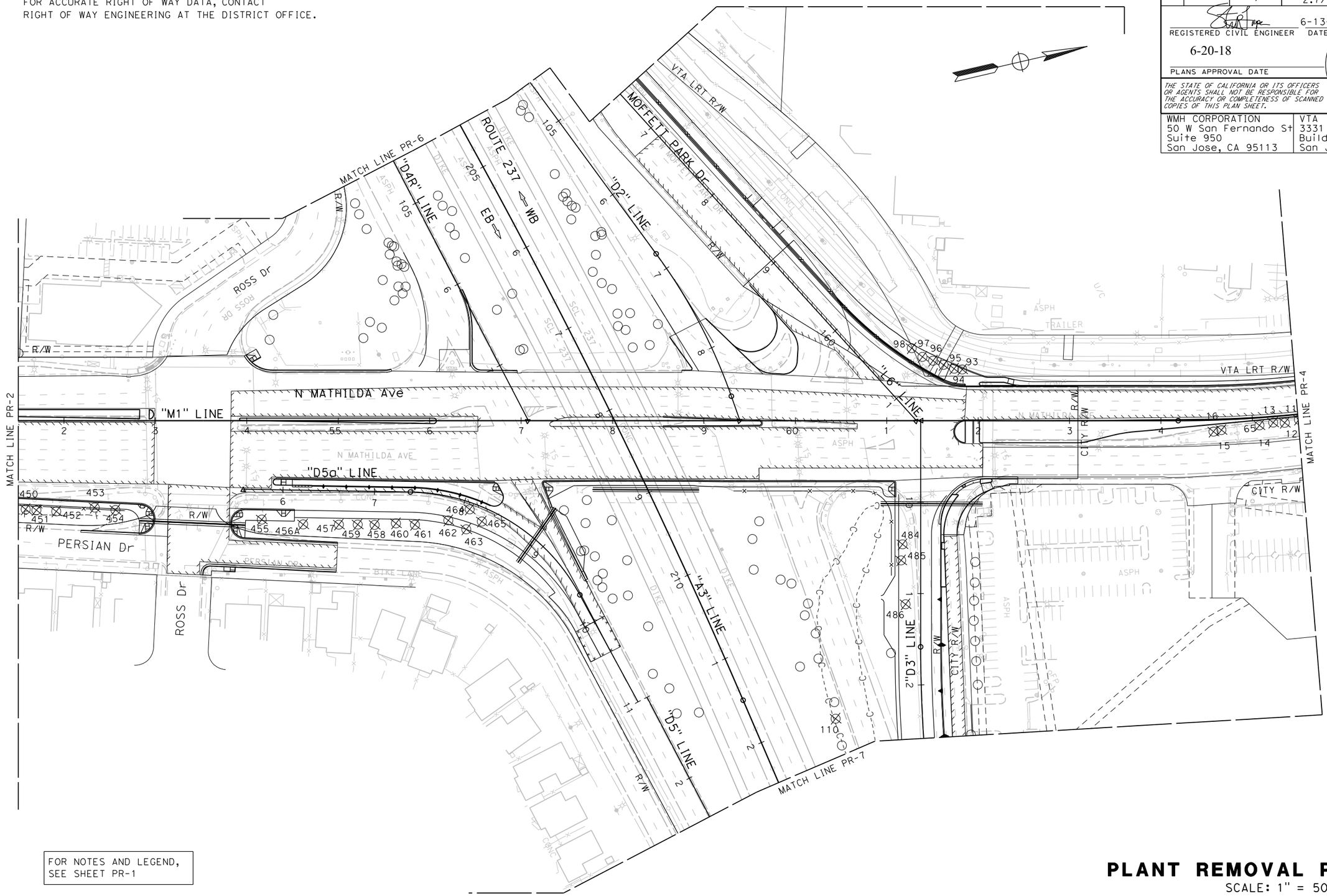

FOR NOTES AND LEGEND, SEE SHEET PR-1

PLANT REMOVAL PLAN

SCALE: 1" = 50'

PR-3

STATE OF CALIFORNIA - DEPARTMENT OF TRANSPORTATION

Caltrans

CONSULTANT FUNCTIONAL SUPERVISOR: TIMOTHY J. LEE

CALCULATED-DESIGNED BY: SHAWN VOGTMAN

CHECKED BY: STEVE LOUPE

REVISED BY: YV

DATE REVISED: 07/13/17

SCV: 05/03/18

X:\237_101_Mathilda\000_CAD\Sheets\SE-Plant Removal\0413000204se003.dgn

LAST REVISION 01-15-18

DATE PLOTTED => 6/20/2018
TIME PLOTTED => 11:24:08 AM

BORDER LAST REVISED 7/2/2010

USERNAME => Eilif
DGN FILE => 0413000204se003.dgn

RELATIVE BORDER SCALE IS IN INCHES 0 1 2 3

UNIT 0000

PROJECT NUMBER & PHASE 0413000204

NOTE:

FOR ACCURATE RIGHT OF WAY DATA, CONTACT
RIGHT OF WAY ENGINEERING AT THE DISTRICT OFFICE.

Dist	COUNTY	ROUTE	POST MILES TOTAL PROJECT	SHEET No.	TOTAL SHEETS
04	SCL	101,237	45.2/45.8, 2.7/3.3	367	736

REGISTERED CIVIL ENGINEER — 6-13-18 DATE

6-20-18
PLANS APPROVAL DATE

REGISTERED PROFESSIONAL ENGINEER
STEVE LOUPE
No. 63575
Exp. 9/30/18
CIVIL
STATE OF CALIFORNIA

THE STATE OF CALIFORNIA OR ITS OFFICERS OR AGENTS SHALL NOT BE RESPONSIBLE FOR THE ACCURACY OR COMPLETENESS OF SCANNED COPIES OF THIS PLAN SHEET.

WMH CORPORATION 50 W San Fernando St Suite 950 San Jose, CA 95113	VTA 3331 N First St Building B San Jose, Ca 95134

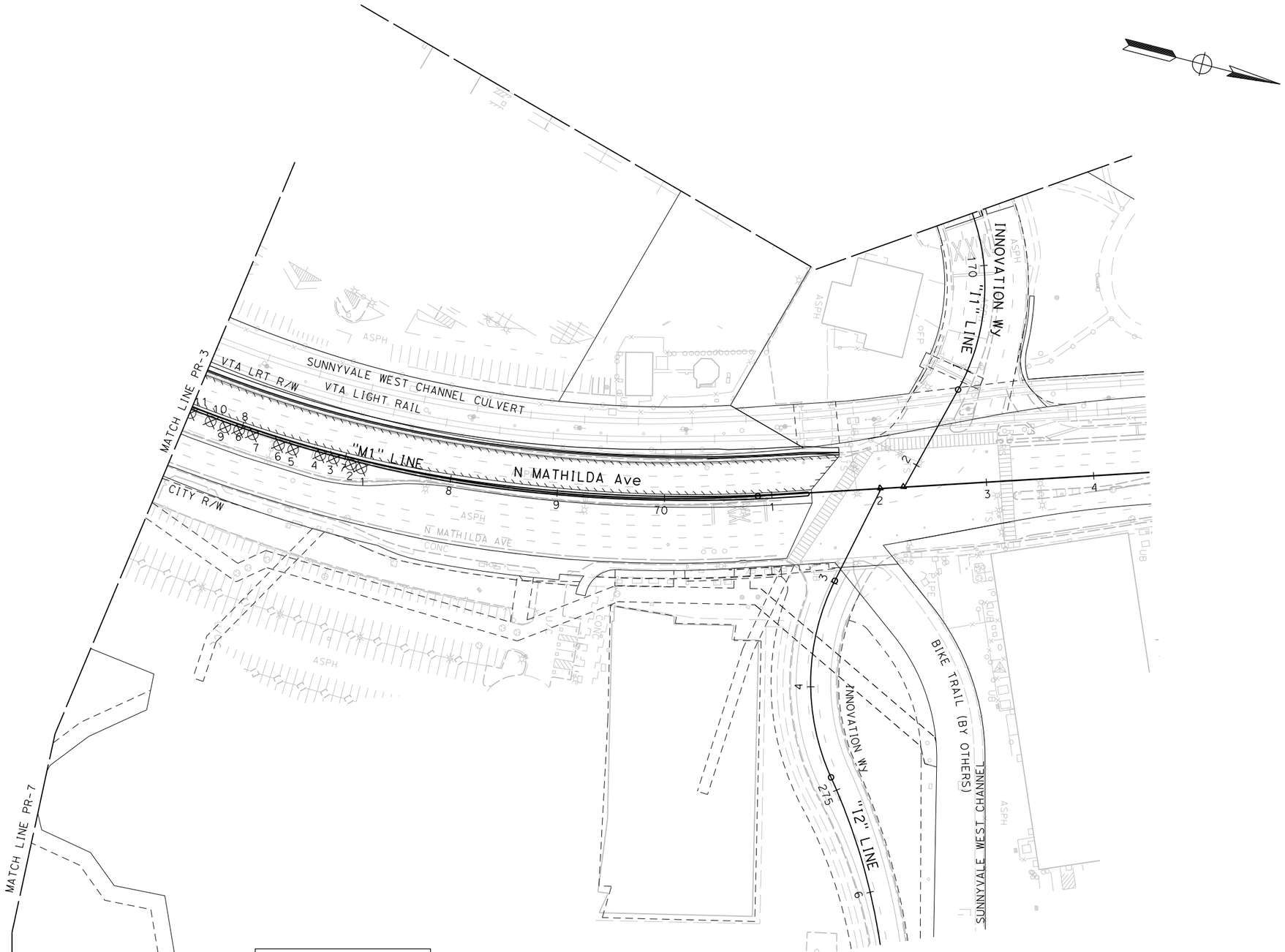

FOR NOTES AND LEGEND,
SEE SHEET PR-1

PLANT REMOVAL PLAN

SCALE: 1" = 50'

PR-4

STATE OF CALIFORNIA - DEPARTMENT OF TRANSPORTATION	CONSULTANT FUNCTIONAL SUPERVISOR	TIMOTHY J. LEE	
CALCULATED-DESIGNED BY	SHAWN VOGTMAN		
CHECKED BY	STEVE LOUPE		
REVISED BY	YV	SCV	
DATE REVISED	07/13/17	05/03/18	

LAST REVISION: DATE PLOTTED => 6/20/2018
01-15-18 TIME PLOTTED => 11:24:13 AM

X:\237_101_Mathilda\000_CAD\Sheets\SE-Plant Removal\0413000204se004.dgn

BORDER LAST REVISED 7/2/2010 | USERNAME => Eilif | DGN FILE => 0413000204se004.dgn | RELATIVE BORDER SCALE IS IN INCHES 0 1 2 3 | UNIT 0000 | PROJECT NUMBER & PHASE 0413000204

NOTE:

FOR ACCURATE RIGHT OF WAY DATA, CONTACT
RIGHT OF WAY ENGINEERING AT THE DISTRICT OFFICE.

Dist	COUNTY	ROUTE	POST MILES TOTAL PROJECT	SHEET No.	TOTAL SHEETS
04	SCL	101,237	45.2/45.8, 2.7/3.3	368	736

6-13-18
REGISTERED CIVIL ENGINEER — DATE

6-20-18
PLANS APPROVAL DATE

REGISTERED PROFESSIONAL ENGINEER
STEVE LOUPE
No. 63575
Exp. 9/30/18
CIVIL
STATE OF CALIFORNIA

THE STATE OF CALIFORNIA OR ITS OFFICERS OR AGENTS SHALL NOT BE RESPONSIBLE FOR THE ACCURACY OR COMPLETENESS OF SCANNED COPIES OF THIS PLAN SHEET.

WMH CORPORATION
50 W San Fernando St
Suite 950
San Jose, CA 95113

VTA
3331 N First St
Building B
San Jose, Ca 95134

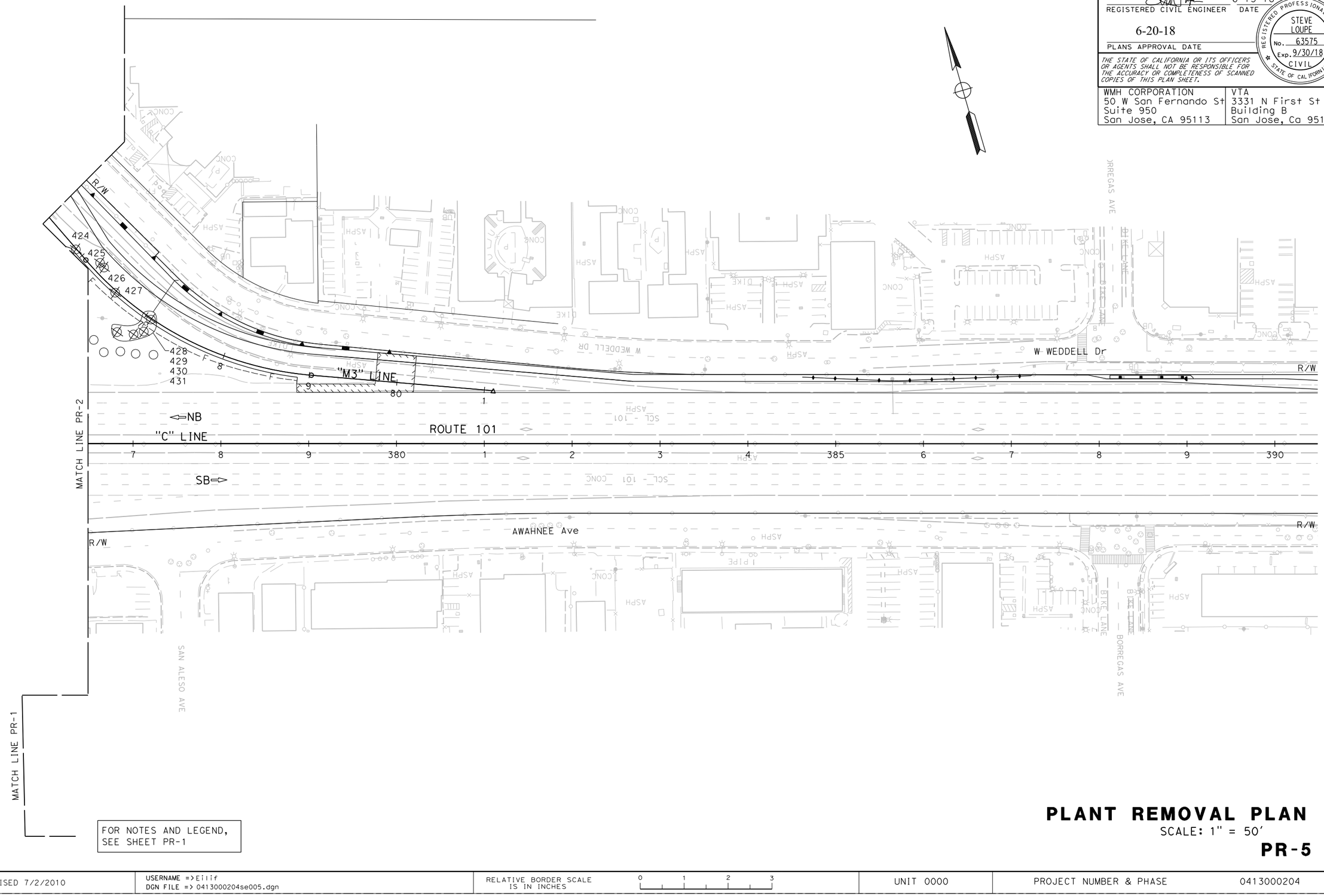

FOR NOTES AND LEGEND,
SEE SHEET PR-1

PLANT REMOVAL PLAN

SCALE: 1" = 50'

PR-5

REVISED BY	DATE REVISED
YV	07/13/17
SCV	05/03/18

CALCULATED-DESIGNED BY: SHAWN VOGTMAN
CHECKED BY: STEVE LOUPE
CONSULTANT FUNCTIONAL SUPERVISOR: TIMOTHY J. LEE

STATE OF CALIFORNIA - DEPARTMENT OF TRANSPORTATION
Caltrans

LAST REVISION 01-15-18
DATE PLOTTED => 6/20/2018
TIME PLOTTED => 11:24:17 AM

X:\237_101_Mathilda\000_CAD\Sheets\SE-Plant Removal\0413000204se005.dgn

BORDER LAST REVISED 7/2/2010 | USERNAME => Eilif | DGN FILE => 0413000204se005.dgn | RELATIVE BORDER SCALE IS IN INCHES 0 1 2 3 | UNIT 0000 | PROJECT NUMBER & PHASE 0413000204

Dist	COUNTY	ROUTE	POST MILES TOTAL PROJECT	SHEET No.	TOTAL SHEETS
04	SCL	101,237	45.2/45.8, 2.7/3.3	369	736

REGISTERED CIVIL ENGINEER 6-13-18 DATE

6-20-18
PLANS APPROVAL DATE

REGISTERED PROFESSIONAL ENGINEER STEVE LOUPE No. 63575 Exp. 9/30/18 CIVIL STATE OF CALIFORNIA

THE STATE OF CALIFORNIA OR ITS OFFICERS OR AGENTS SHALL NOT BE RESPONSIBLE FOR THE ACCURACY OR COMPLETENESS OF SCANNED COPIES OF THIS PLAN SHEET.

WMH CORPORATION
50 W San Fernando St
Suite 950
San Jose, CA 95113

VTA
3331 N First St
Building B
San Jose, Ca 95134

NOTE:
FOR ACCURATE RIGHT OF WAY DATA, CONTACT RIGHT OF WAY ENGINEERING AT THE DISTRICT OFFICE.

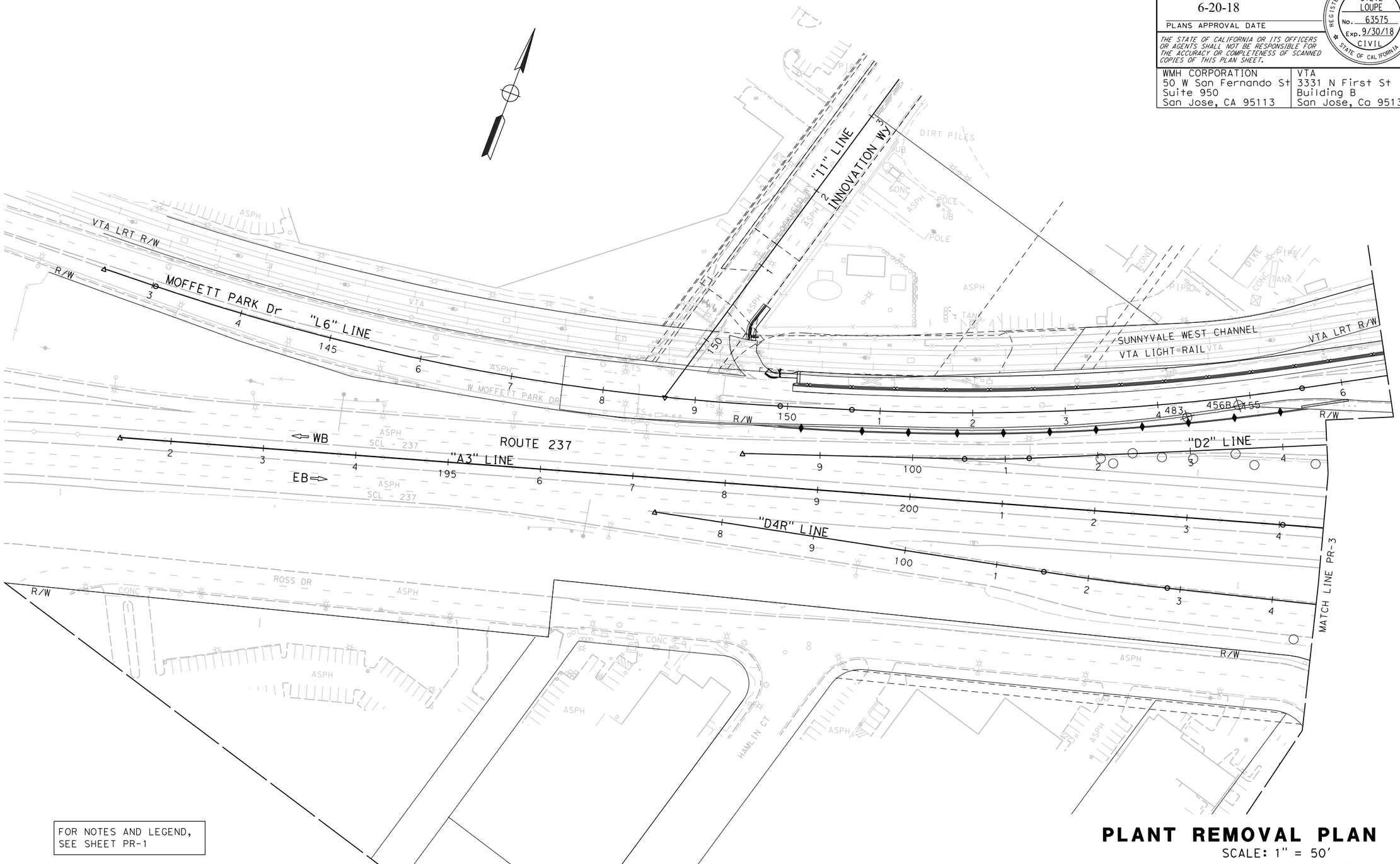

FOR NOTES AND LEGEND, SEE SHEET PR-1

PLANT REMOVAL PLAN

SCALE: 1" = 50'

PR-6

STATE OF CALIFORNIA - DEPARTMENT OF TRANSPORTATION
Caltrans

CONSULTANT FUNCTIONAL SUPERVISOR: TIMOTHY J. LEE
CALCULATED-DESIGNED BY: SHAWN VOGTMAN
CHECKED BY: STEVE LOUPE
REVISED BY: YV
DATE REVISED: 07/13/17
SCV: 05/03/18

X:\237_101_Mathilda\000_CAD\Sheets\SE-Plant Removal\0413000204se006.dgn

LAST REVISION 01-15-18
DATE PLOTTED => 6/20/2018
TIME PLOTTED => 11:24:22 AM

NOTE:

FOR ACCURATE RIGHT OF WAY DATA, CONTACT
RIGHT OF WAY ENGINEERING AT THE DISTRICT OFFICE.

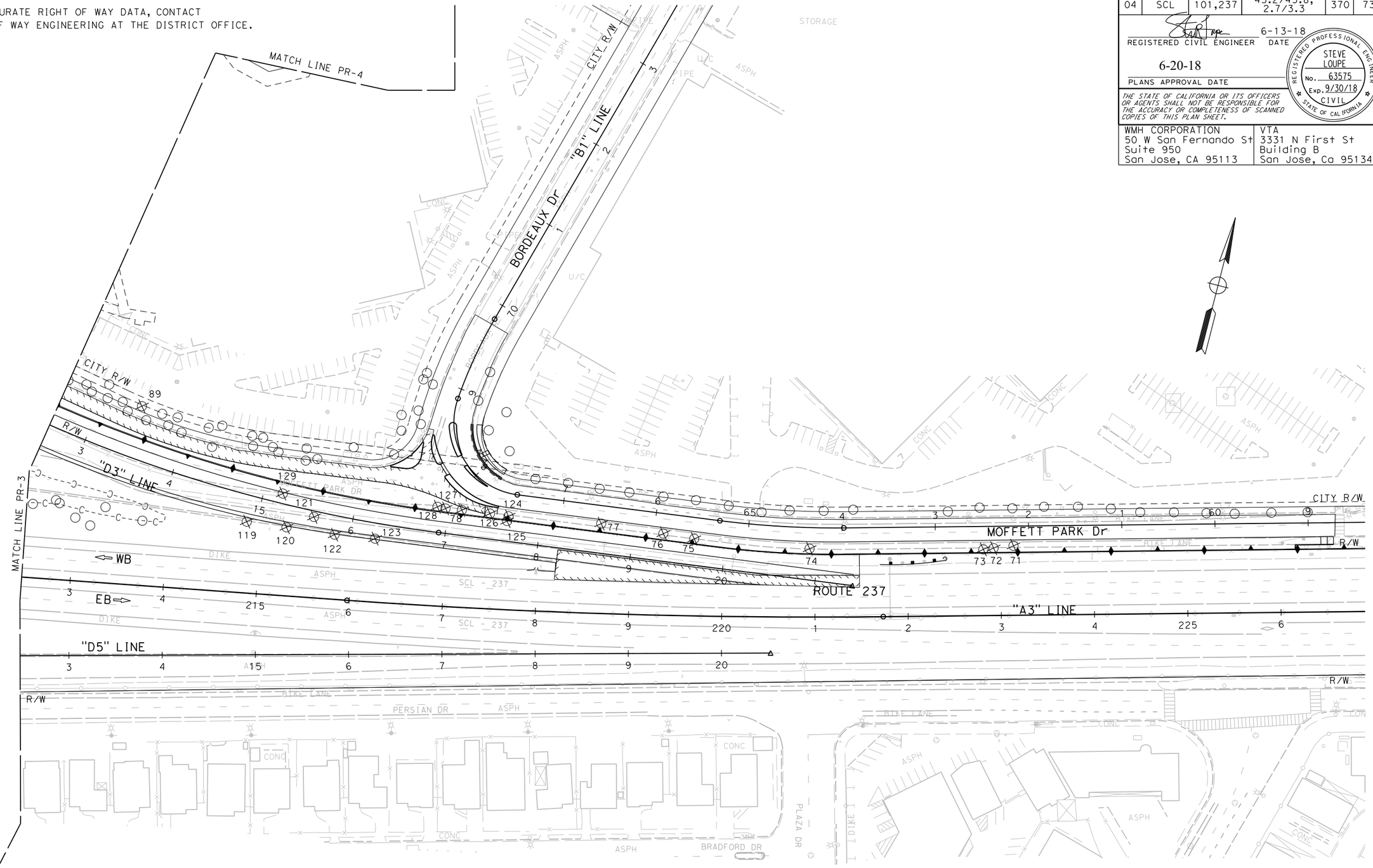

FOR NOTES AND LEGEND,
SEE SHEET PR-1

PLANT REMOVAL PLAN

SCALE: 1" = 50'

PR-7

Dist	COUNTY	ROUTE	POST MILES TOTAL PROJECT	SHEET No.	TOTAL SHEETS
04	SCL	101,237	45.2/45.8, 2.7/3.3	370	736

6-13-18
REGISTERED CIVIL ENGINEER DATE

6-20-18
PLANS APPROVAL DATE

REGISTERED PROFESSIONAL ENGINEER
STEVE LOUPE
No. 63575
Exp. 9/30/18
CIVIL
STATE OF CALIFORNIA

THE STATE OF CALIFORNIA OR ITS OFFICERS OR AGENTS SHALL NOT BE RESPONSIBLE FOR THE ACCURACY OR COMPLETENESS OF SCANNED COPIES OF THIS PLAN SHEET.

WMH CORPORATION 50 W San Fernando St Suite 950 San Jose, CA 95113	VTA 3331 N First St Building B San Jose, Ca 95134

CALCULATED-DESIGNED BY	SHAWN VOGTMAN	REVISED BY	SCV
CHECKED BY	STEVE LOUPE	DATE REVISED	05/03/18
CONSULTANT FUNCTIONAL SUPERVISOR	TIMOTHY J. LEE	YV	07/13/17

STATE OF CALIFORNIA - DEPARTMENT OF TRANSPORTATION
Caltrans

LAST REVISION 01-15-18
DATE PLOTTED => 6/20/2018
TIME PLOTTED => 11:24:27 AM

X:\237_101_Mathilda\000_CAD\Sheets\SE-Plant Removal\0413000204se007.dgn

BORDER LAST REVISED 7/2/2010 | USERNAME => Eilif | DGN FILE => 0413000204se007.dgn | RELATIVE BORDER SCALE IS IN INCHES 0 1 2 3 | UNIT 0000 | PROJECT NUMBER & PHASE 0413000204

Dist	COUNTY	ROUTE	POST MILES TOTAL PROJECT	SHEET No.	TOTAL SHEETS
04	SCL	101,237	45.2/45.8, 2.7/3.3	371	736

6-13-18
REGISTERED CIVIL ENGINEER DATE

6-20-18
PLANS APPROVAL DATE

REGISTERED PROFESSIONAL ENGINEER
STEVE LOUPE
No. 63575
Exp. 9/30/18
CIVIL
STATE OF CALIFORNIA

THE STATE OF CALIFORNIA OR ITS OFFICERS OR AGENTS SHALL NOT BE RESPONSIBLE FOR THE ACCURACY OR COMPLETENESS OF SCANNED COPIES OF THIS PLAN SHEET.

WMH CORPORATION
50 W San Fernando St
Suite 950
San Jose, CA 95113

VTA
3331 N First St
Building B
San Jose, Ca 95134

CLEARING AND GRUBBING

TREE ID	SPECIES	DIAMETER (INCHES)
1	Crape Myrtle	16
2	Crape Myrtle	14
3	Crape Myrtle	18
4	Crape Myrtle	16
5	Bradford Pear	28
6	Bradford Pear	29
7	Bradford Pear	31
8	Bradford Pear	28
9	Bradford Pear	20
10	Bradford Pear	29
11	Bradford Pear	21
12	Bradford Pear	27
13	Bradford Pear	26
14	Bradford Pear	24
15	Bradford Pear	30
16	Bradford Pear	30
71	Unknown Tree	26
72	Chinese Elm	36
73	Chinese Elm	32
74	Southern Oak	36
75	Southern Oak	23
76	Southern Oak	9
77	Chinese Elm	36
78	Sheoak	88
89	Italian Stone Pine	95
93	Cherry Plum	15
94	Cherry Plum	13
95	Cherry Plum	15
96	Cherry Plum	14
97	Cherry Plum	14
98	Cherry Plum	15
110	Peruvian Pepper	54
119	Southern Oak	9
120	Italian Cypress	13
121	Sheoak	20
122	Autumn Purple Ash	32
123	Blackwood Acacia	9
124	Southern Oak	21
125	Southern Oak	17
126	Southern Oak	11
127	Chinese Elm	16
128	Southern Oak	21
129	Autumn Purple Ash	17
135	Autumn Purple Ash	54
136	Southern Magnolia	25
137	Southern Oak	9
138	Southern Oak	6
139	Autumn Purple Ash	12
166	Crape Myrtle	22
147	Peruvian Pepper	22

TREE ID	SPECIES	DIAMETER (INCHES)
148	Peruvian Pepper	22
149	Crape Myrtle	22
150	Peruvian Pepper	22
151	Deodar Cedar	22
153	Deodar Cedar	12
153	Crape Myrtle	12
154	Deodar Cedar	33
155	Deodar Cedar	36
156	Deodar Cedar	52
157	Deodar Cedar	23
164	Peruvian Pepper	27
165	Peruvian Pepper	31
166	Bradford Pear	24
166	Peruvian Pepper	68
167	Peruvian Pepper	30
168	Peruvian Pepper	15
169	Peruvian Pepper	13
170	Bradford Pear	24
170	Cherry Plum	51
171	Cherry Plum	57
172	Cherry Plum	12
178	Deodar Cedar	32
214	Mixed (polygon)	-
215	Silk Oak	42
216	Silk Oak	38
217	Southern Oak	14
218	Silk Oak	45
219	Southern Oak	10
220	Silk Oak	45
221	Silk Oak	52
222	Silk Oak	34
223	Southern Oak	6
224	Silk Oak	84
225	Southern Oak	13
226	Southern Oak	12
227	Silk Oak	31
228	Silk Oak	29
229	Silk Oak	44
230	Silk Oak	50
231	Chinese Elm	41
232	Chinese Elm	25
233	Southern Oak	12
235	Pine	60
240	Cherry Plum	8
241	Cherry Plum	11
242	Cherry Plum	11
283	Deodar Cedar	28
284	Deodar Cedar	20
286	Deodar Cedar	37
289	Deodar Cedar	27

TREE ID	SPECIES	DIAMETER (INCHES)
290	Deodar Cedar	26
294	Cherry Plum	11
295	Cherry Plum	9
296	Cherry Plum	8
297	Cherry Plum	9
298	Cherry Plum	9
316	Southern Magnolia	34
317	Canary Island Pine	55
318	Canary Island Pine	41
319	Canary Island Pine	49
320	Canary Island Pine	40
321	Canary Island Pine	45
322	Canary Island Pine	53
323	Canary Island Pine	45
324	Canary Island Pine	61
325	Canary Island Pine	64
326	Peruvian Pepper	22
327	Peruvian Pepper	20
328	Peruvian Pepper	43
329	Peruvian Pepper	68
330	Peruvian Pepper	19
331	Peruvian Pepper	15
332	Peruvian Pepper	18
333	Peruvian Pepper	17
334	Deodar Cedar	36
335	Deodar Cedar	23
336	Deodar Cedar	36
337	Cherry Plum	12
338	Cherry Plum	13
339	Cherry Plum	13
340	Cherry Plum	11
341	Cherry Plum	10
373	Blackwood Acacia	11
374	Blackwood Acacia	18
375	Glossy Privet	16
379	Unknown Ornamental	-
380	Blue Gum	65
399	Cherry Plum	12
400	Cherry Plum	12
401	Cherry Plum	12
402	Cherry Plum	12
403	Cherry Plum	12
404	Southern Oak	18
405	Southern Magnolia	33
406	Southern Oak	9
407	Autumn Purple Ash	11
408	Autumn Purple Ash	6
409	Autumn Purple Ash	18
410	Blackwood Acacia	28
412	Pine	16

TREE ID	SPECIES	DIAMETER (INCHES)
415	Cherry Plum	9
416	Blackwood Acacia	28
417	Blackwood Acacia	26
418	Unknown Ornamental	12
419	Mixed (polygon)	-
420	Chinese Pistache	12
422	Chinese Pistache	22
423	Unknown Fruit Tree	9
424	Red Ironbark	24
425	Cherry Plum	6
426	Cherry Plum	12
427	Peruvian Pepper	54
428	Unknown Fruit Tree	14
429	Deodar Cedar	20
430	Deodar Cedar	11
431	Deodar Cedar	14
446	Deodar Cedar	51
447	Chinese Pistache	23
448	Chinese Pistache	23
449	Chinese Pistache	24
450	Deodar Cedar	46
451	Deodar Cedar	40
452	Deodar Cedar	50
453	Chinese Pistache	17
454	Chinese Pistache	31
455	Chinese Pistache	56
456A	Deodar Cedar	56
456B	Ash	12
457	Deodar Cedar	56
458	Deodar Cedar	56
459	Deodar Cedar	56
460	Deodar Cedar	56
461	Deodar Cedar	49
462	Cherry Plum	17
463	Chinese Pistache	19
464	Chinese Pistache	25
465	Chinese Pistache	22
483	Ash	14
484	Southern Oak	36
485	Southern Oak	40
486	Southern Oak	24

TOTAL TREE REMOVAL
191 (N)

(N) - NOT A SEPARATE PAY ITEM, FOR INFORMATION ONLY

PLANT REMOVAL QUANTITIES

SCALE: 1" = 50'

PR-8

APPROVED FOR PLANT REMOVAL WORK ONLY

REVISED BY	DATE REVISED
SCV	05/03/18
YV	07/13/17
SHAWN VOGTMAN	
STEVE LOUPE	

CALCULATED-DESIGNED BY
CHECKED BY
QUALITY CONTROL BY
CONSULTANT FUNCTIONAL SUPERVISOR: TIMOTHY J. LEE

STATE OF CALIFORNIA - DEPARTMENT OF TRANSPORTATION
Caltrans

X:\237_101_Morrilldo\000_CAD\Sheets\SE-Plant Removal\0413000204se008.dgn

LAST REVISION 01-15-18
DATE PLOTTED => 6/20/2018
TIME PLOTTED => 11:24:32 AM

BORDER LAST REVISED 7/2/2010
USERNAME => Eilif
DGN FILE => 0413000204se008.dgn
RELATIVE BORDER SCALE IS IN INCHES 0 1 2 3
UNIT 0000
PROJECT NUMBER & PHASE 0413000204

Dist	COUNTY	ROUTE	POST MILES TOTAL PROJECT	SHEET No.	TOTAL SHEETS
04	SCL	101,237	45.2/45.8, 2.7/3.3	372	736

REGISTERED CIVIL ENGINEER — 6-13-18 DATE

6-20-18
PLANS APPROVAL DATE

REGISTERED PROFESSIONAL ENGINEER — STEVE LOUPE — No. 63575 — Exp. 9/30/18 — CIVIL — STATE OF CALIFORNIA

THE STATE OF CALIFORNIA OR ITS OFFICERS OR AGENTS SHALL NOT BE RESPONSIBLE FOR THE ACCURACY OR COMPLETENESS OF SCANNED COPIES OF THIS PLAN SHEET.

WMH CORPORATION
50 W San Fernando St
Suite 950
San Jose, CA 95113

VTA
3331 N First St
Building B
San Jose, Ca 95134

ROADSIDE CLEARING

TREE ID	SPECIES	DIAMETER (INCHES)
140	Peruvian Pepper	42
141	Cherry Plum	12
142	Cherry Plum	23
143	Cherry Plum	23
144	Cherry Plum	23
282	Blue Gum	32
385	Unknown Ornamental	12
386	Unknown Tree	11
387	Cherry Plum	13
388	Unknown Fruit Tree	13
389	Cherry Plum	12
390	Cherry Plum	9
391	Cherry Plum	25
392	Cherry Plum	27
394	Peruvian Pepper	28
395	Peruvian Pepper	60
396	Peruvian Pepper	55
397	Peruvian Pepper	50
398	Mexican Fan Palm	42
411	Cherry Plum	10
413	Cherry Plum	9
414	Cherry Plum	9
439	Deodar Cedar	33
440	Deodar Cedar	43
441	Deodar Cedar	44
442	Chinese Pistache	26

APPROVED FOR PLANT REMOVAL WORK ONLY

TOTAL TREE REMOVAL
26 (N)

(N) - NOT A SEPARATE PAY ITEM, FOR INFORMATION ONLY

PLANT REMOVAL QUANTITIES

SCALE: 1" = 50'

PR-9

	REVISED BY	DATE REVISED
SCV	YV	07/13/17 05/03/18

CALCULATED-DESIGNED BY: SHAWN VOGTMAN
CHECKED BY: STEVE LOUPE

CONSULTANT FUNCTIONAL SUPERVISOR: TIMOTHY J. LEE

STATE OF CALIFORNIA - DEPARTMENT OF TRANSPORTATION

X:\237_101_Mathilde\000_CAD\Sheets\SE-Plant Removal\0413000204se009.dgn

LAST REVISION: DATE PLOTTED => 6/20/2018
TIME PLOTTED => 01-15-18 11:24:36 AM

BORDER LAST REVISED 7/2/2010 | USERNAME => Eilif | DGN FILE => 0413000204se009.dgn | RELATIVE BORDER SCALE IS IN INCHES 0 1 2 3 | UNIT 0000 | PROJECT NUMBER & PHASE 0413000204

Dist	COUNTY	ROUTE	POST MILES TOTAL PROJECT	SHEET No.	TOTAL SHEETS
04	SCL	101,237	45.2/45.8, 2.7/3.3	373	736

REGISTERED CIVIL ENGINEER 6-13-18 DATE

6-20-18
PLANS APPROVAL DATE

REGISTERED PROFESSIONAL ENGINEER STEVE LOUPE No. 63575 Exp. 9/30/18 CIVIL STATE OF CALIFORNIA

THE STATE OF CALIFORNIA OR ITS OFFICERS OR AGENTS SHALL NOT BE RESPONSIBLE FOR THE ACCURACY OR COMPLETENESS OF SCANNED COPIES OF THIS PLAN SHEET.

WMH CORPORATION
50 W San Fernando St
Suite 950
San Jose, CA 95113

VTA
3331 N First St
Building B
San Jose, Ca 95134

EROSION CONTROL TYPE 1

SEQUENCE	ITEM	MATERIAL	MATERIAL TYPE	APPLICATION RATE
STEP 1	COMPOST	COMPOST	FINE	134 CY/ACRE
STEP 2	HYDROSEED	SEED	MIX 1	54 LB/ACRE
		FIBER	WOOD	1,000 LB/ACRE

EROSION CONTROL TYPE 2

SEQUENCE	ITEM	MATERIAL	MATERIAL TYPE	APPLICATION RATE
STEP 1	COMPOST	COMPOST	FINE	134 CY/ACRE
STEP 2	ROLLED EROSION CONTROL PRODUCT (NETTING)	NETTING	TYPE A	
STEP 3	HYDROSEED	SEED	MIX 1	54 LB/ACRE
		FIBER	WOOD	1,000 LB/ACRE

EROSION CONTROL TYPE 3 / TYPE 4

SEQUENCE	ITEM	MATERIAL	MATERIAL TYPE	APPLICATION RATE
STEP 1	HYDROSEED	SEED	MIX 1	54 LB/ACRE
		FIBER	WOOD	1,000 LB/ACRE
STEP 2	HYDROMULCH	FIBER	WOOD	1,500 LB/ACRE
		TACKIFIER	GUAR	125 LB/ACRE

FIBER ROLLS

SEQUENCE	ITEM	MATERIAL	MATERIAL TYPE	REMARKS
IN EC TYPE 1 & 2 AREAS FIBER ROLLS MUST BE INSTALLED AFTER RECP (NETTING) AND BEFORE HYDROSEED	FIBER ROLLS	FIBER ROLL	8" TO 10" Dia OR 10" TO 12" Dia	TYPE 1 FIBER ROLL INSTALLATION

SEED MIX

BOTANICAL NAME (COMMON NAME)	PERCENT GERMINATION (MINIMUM)	POUNDS PURE LIVE SEED PER ACRE (SLOPE MEASUREMENT)
BROMUS CARINATUS (CALIFORNIA BROME)	75	11
CAREX TUMULICOLA (FOOTHILL SEDGE)	30	3
FESTUCA RUBRA MOLATE (MOLATE RED FESCUE)	50	9
HORDEUM BRACHYANTHERUM (MEADOW BARLEY)	50	11
ELYMUS TRITICOIDES RIO (CREEPING WILDRYE)	50	5
STIPA PULCHRA (PURPLE NEEDLEGRASS)	50	10
VULPIA MICROSTACHYS (THREE WEEKS FESCUE)	50	5
	TOTAL	54

EROSION CONTROL LEGEND

ECL-1

STATE OF CALIFORNIA - DEPARTMENT OF TRANSPORTATION
Caltrans
CONSULTANT FUNCTIONAL SUPERVISOR: TIMOTHY J. LEE
CALCULATED-DESIGNED BY: RICHARD SAGASTUME
CHECKED BY: STEVE LOUPE
REVISED BY: RS
DATE REVISED: 7/21/17
SCV: 05/03/18

X:\237_101_Mathilda\000_CAD\Sheets\TE-Erosion Control\TC-Legend\0413000204tc001.dgn

LAST REVISION 01-15-18
DATE PLOTTED => 6/20/2018
TIME PLOTTED => 11:26:42 AM

NOTE:

FOR ACCURATE RIGHT OF WAY DATA, CONTACT
RIGHT OF WAY ENGINEERING AT THE DISTRICT OFFICE.

LEGEND:

EROSION CONTROL (TYPE 1)

EROSION CONTROL (TYPE 2)

EROSION CONTROL (TYPE 3)

EROSION CONTROL (TYPE 4)

Dist	COUNTY	ROUTE	POST MILES TOTAL PROJECT	SHEET No.	TOTAL SHEETS
04	SCL	101,237	45.2/45.8, 2.7/3.3	374	736

REGISTERED CIVIL ENGINEER — 6-13-18 DATE

STEVE LOUPE No. 63575 Exp. 9/30/18 CIVIL — REGISTERED PROFESSIONAL ENGINEER — STATE OF CALIFORNIA

6-20-18
PLANS APPROVAL DATE

THE STATE OF CALIFORNIA OR ITS OFFICERS OR AGENTS SHALL NOT BE RESPONSIBLE FOR THE ACCURACY OR COMPLETENESS OF SCANNED COPIES OF THIS PLAN SHEET.

WMH CORPORATION 50 W San Fernando St Suite 950 San Jose, CA 95113	VTA 3331 N First St Building B San Jose, Ca 95134

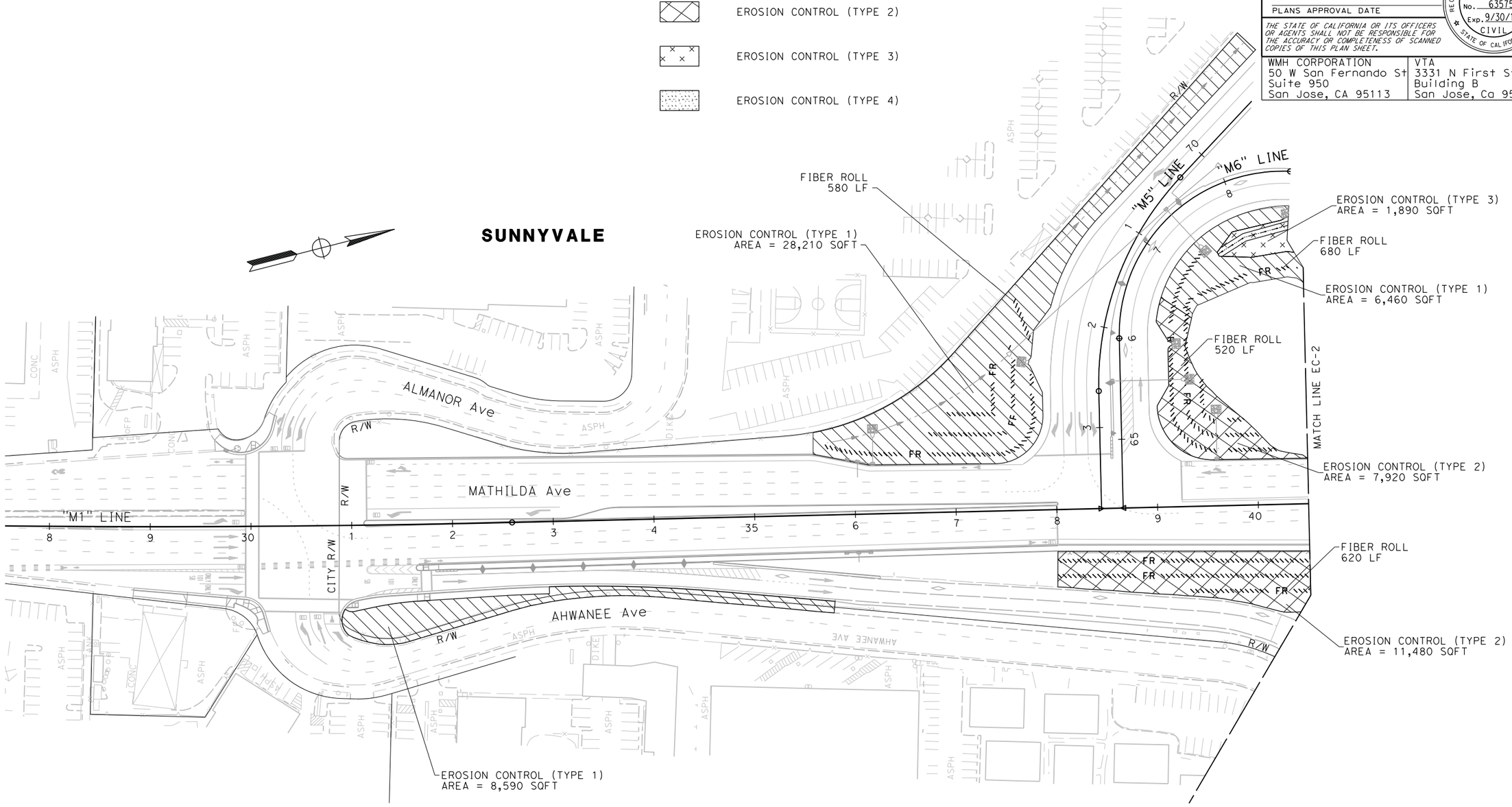

APPROVED FOR EROSION CONTROL WORK ONLY

EROSION CONTROL PLAN

SCALE: 1" = 50'

EC-1

STATE OF CALIFORNIA - DEPARTMENT OF TRANSPORTATION	CONSULTANT FUNCTIONAL SUPERVISOR	TIMOTHY J. LEE	CALCULATED-DESIGNED BY	RICHARD SAGASTUME	REVISED BY
Caltrans			CHECKED BY	STEVE LOUPE	DATE REVISED
					RS 7/21/17
					SCV 05/03/18

LAST REVISION 01-15-18 | DATE PLOTTED => 6/20/2018 | TIME PLOTTED => 11:24:27 AM

X:\237_101_Mathilda\000_CAD\Sheets\TE-Erosion Control\TE-Plans\0413000204te001.dgn

BORDER LAST REVISED 7/2/2010 | USERNAME => Eilif | DGN FILE => 0413000204te001.dgn | RELATIVE BORDER SCALE IS IN INCHES 0 1 2 3 | UNIT 0000 | PROJECT NUMBER & PHASE 0413000204

Dist	COUNTY	ROUTE	POST MILES TOTAL PROJECT	SHEET No.	TOTAL SHEETS
04	SCL	101,237	45.2/45.8, 2.7/3.3	375	736

6-13-18
REGISTERED CIVIL ENGINEER — DATE

6-20-18
PLANS APPROVAL DATE

REGISTERED PROFESSIONAL ENGINEER — STEVE LOUPE — No. 63575 — Exp. 9/30/18 — CIVIL — STATE OF CALIFORNIA

THE STATE OF CALIFORNIA OR ITS OFFICERS OR AGENTS SHALL NOT BE RESPONSIBLE FOR THE ACCURACY OR COMPLETENESS OF SCANNED COPIES OF THIS PLAN SHEET.

WMH CORPORATION 50 W San Fernando St Suite 950 San Jose, CA 95113	VTA 3331 N First St Building B San Jose, Ca 95134

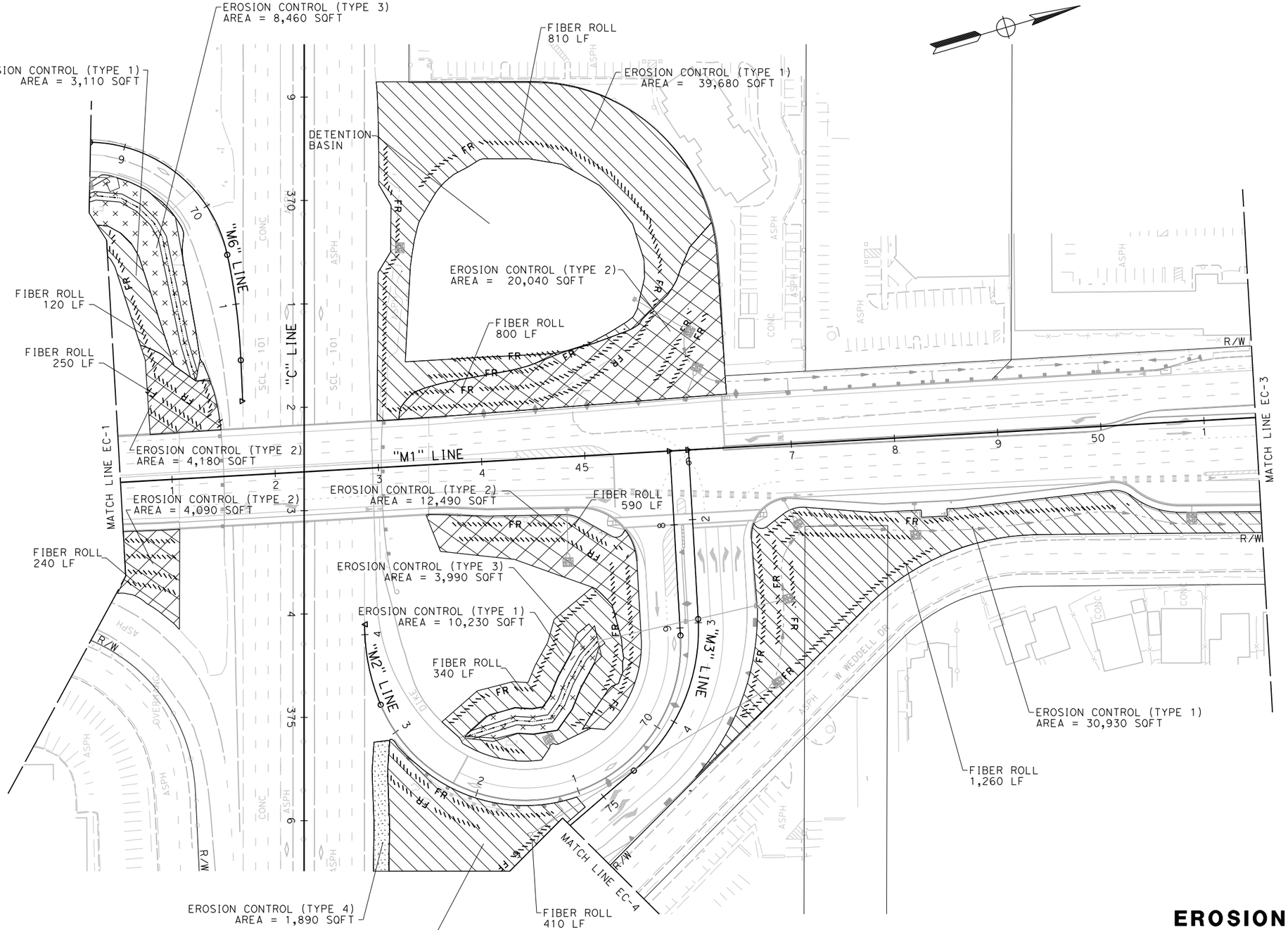

FOR NOTES AND LEGEND, SEE SHEET EC-1

APPROVED FOR EROSION CONTROL WORK ONLY

EROSION CONTROL PLAN

SCALE: 1" = 50'

EC-2

STATE OF CALIFORNIA - DEPARTMENT OF TRANSPORTATION	CONSULTANT FUNCTIONAL SUPERVISOR	TIMOTHY J. LEE		
CALCULATED-DESIGNED BY	RICHARD SAGASTUME	REVISED BY	RS	SCV
CHECKED BY	STEVE LOUPE	DATE REVISED	7/21/17	05/03/18

LAST REVISION: 01-15-18 | DATE PLOTTED => 6/20/2018 | TIME PLOTTED => 11:24:30 AM

X:\237_101_Mathilde\000_CAD\Sheets\TE-Erosion Control\TE-Plans\0413000204te002.dgn

BORDER LAST REVISED 7/2/2010	USERNAME => Eilif DGN FILE => 0413000204te002.dgn	RELATIVE BORDER SCALE IS IN INCHES 0 1 2 3	UNIT 0000	PROJECT NUMBER & PHASE	0413000204

Dist	COUNTY	ROUTE	POST MILES TOTAL PROJECT	SHEET No.	TOTAL SHEETS
04	SCL	101,237	45.2/45.8, 2.7/3.3	376	736

REGISTERED CIVIL ENGINEER — 6-13-18 DATE

STEVE LOUPE No. 63575 Exp. 9/30/18 CIVIL — REGISTERED PROFESSIONAL ENGINEER — STATE OF CALIFORNIA

6-20-18
PLANS APPROVAL DATE

THE STATE OF CALIFORNIA OR ITS OFFICERS OR AGENTS SHALL NOT BE RESPONSIBLE FOR THE ACCURACY OR COMPLETENESS OF SCANNED COPIES OF THIS PLAN SHEET.

WMH CORPORATION 50 W San Fernando St Suite 950 San Jose, CA 95113	VTA 3331 N First St Building B San Jose, Ca 95134

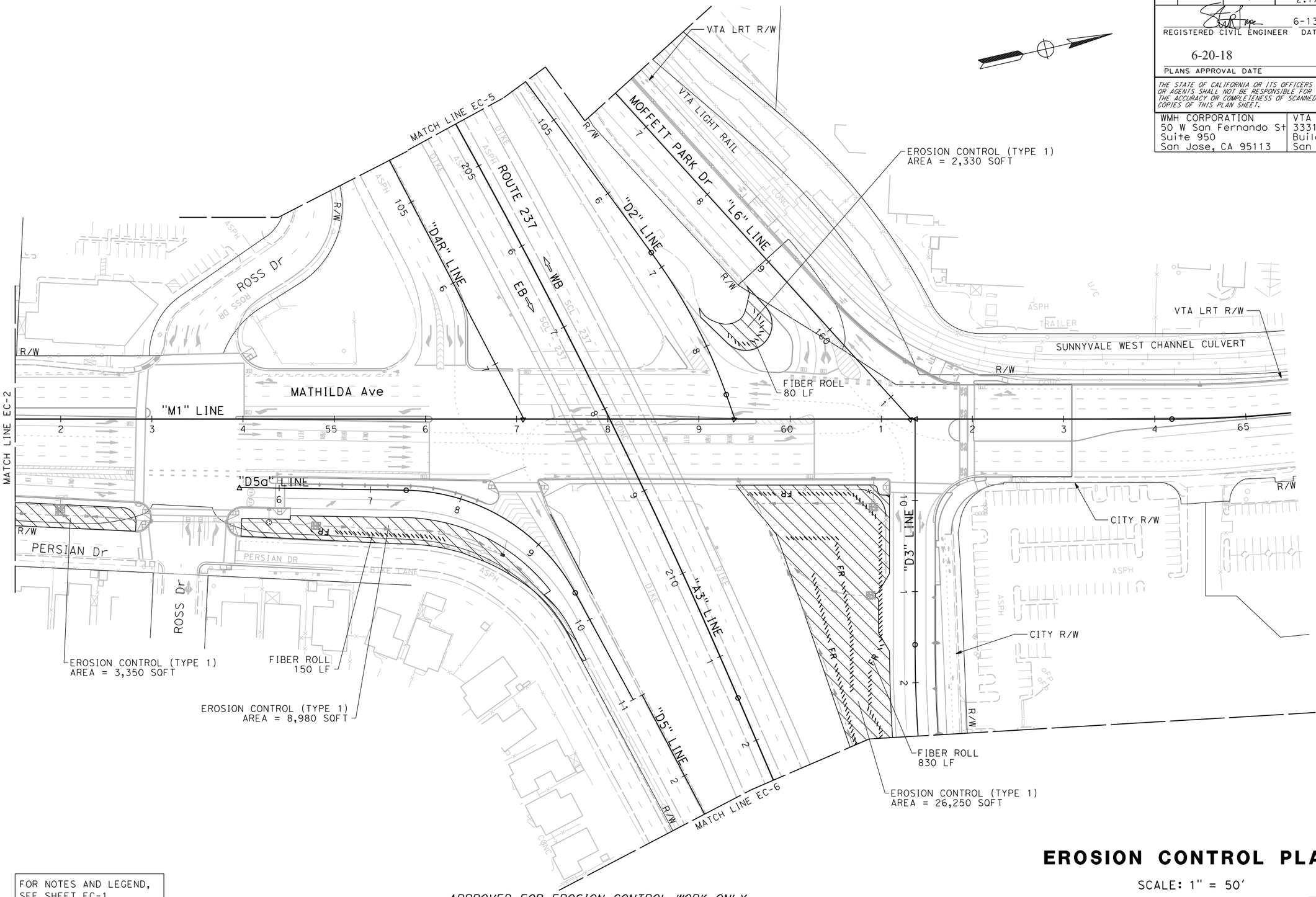

FOR NOTES AND LEGEND, SEE SHEET EC-1

APPROVED FOR EROSION CONTROL WORK ONLY

EROSION CONTROL PLAN

SCALE: 1" = 50'

EC-3

CALCULATED-DESIGNED BY	RICHARD SAGASTUME	REVISED BY	RS	SCV	
CHECKED BY	STEVE LOUPE	DATE REVISED	7/21/17	05/03/18	

TIMOTHY J. LEE
CONSULTANT FUNCTIONAL SUPERVISOR

STATE OF CALIFORNIA - DEPARTMENT OF TRANSPORTATION

Caltrans

LAST REVISION: 01-15-18 DATE PLOTTED => 6/20/2018 TIME PLOTTED => 11:24:34 AM

X:\237_101_Mathilde\000_CAD\Sheets\TE-Erosion Control\TE-Plans\04130002O4te003.dgn

BORDER LAST REVISED 7/2/2010 | USERNAME => Eilif DGN FILE => 0413000204te003.dgn | RELATIVE BORDER SCALE IS IN INCHES 0 1 2 3 | UNIT 0000 | PROJECT NUMBER & PHASE 0413000204

Dist	COUNTY	ROUTE	POST MILES TOTAL PROJECT	SHEET No.	TOTAL SHEETS
04	SCL	101,237	45.2/45.8, 2.7/3.3	377	736

REGISTERED CIVIL ENGINEER 6-13-18 DATE

6-20-18
PLANS APPROVAL DATE

REGISTERED PROFESSIONAL ENGINEER STEVE LOUPE No. 63575 Exp. 9/30/18 CIVIL STATE OF CALIFORNIA

THE STATE OF CALIFORNIA OR ITS OFFICERS OR AGENTS SHALL NOT BE RESPONSIBLE FOR THE ACCURACY OR COMPLETENESS OF SCANNED COPIES OF THIS PLAN SHEET.

WMH CORPORATION
50 W San Fernando St
Suite 950
San Jose, CA 95113

VTA
3331 N First St
Building B
San Jose, Ca 95134

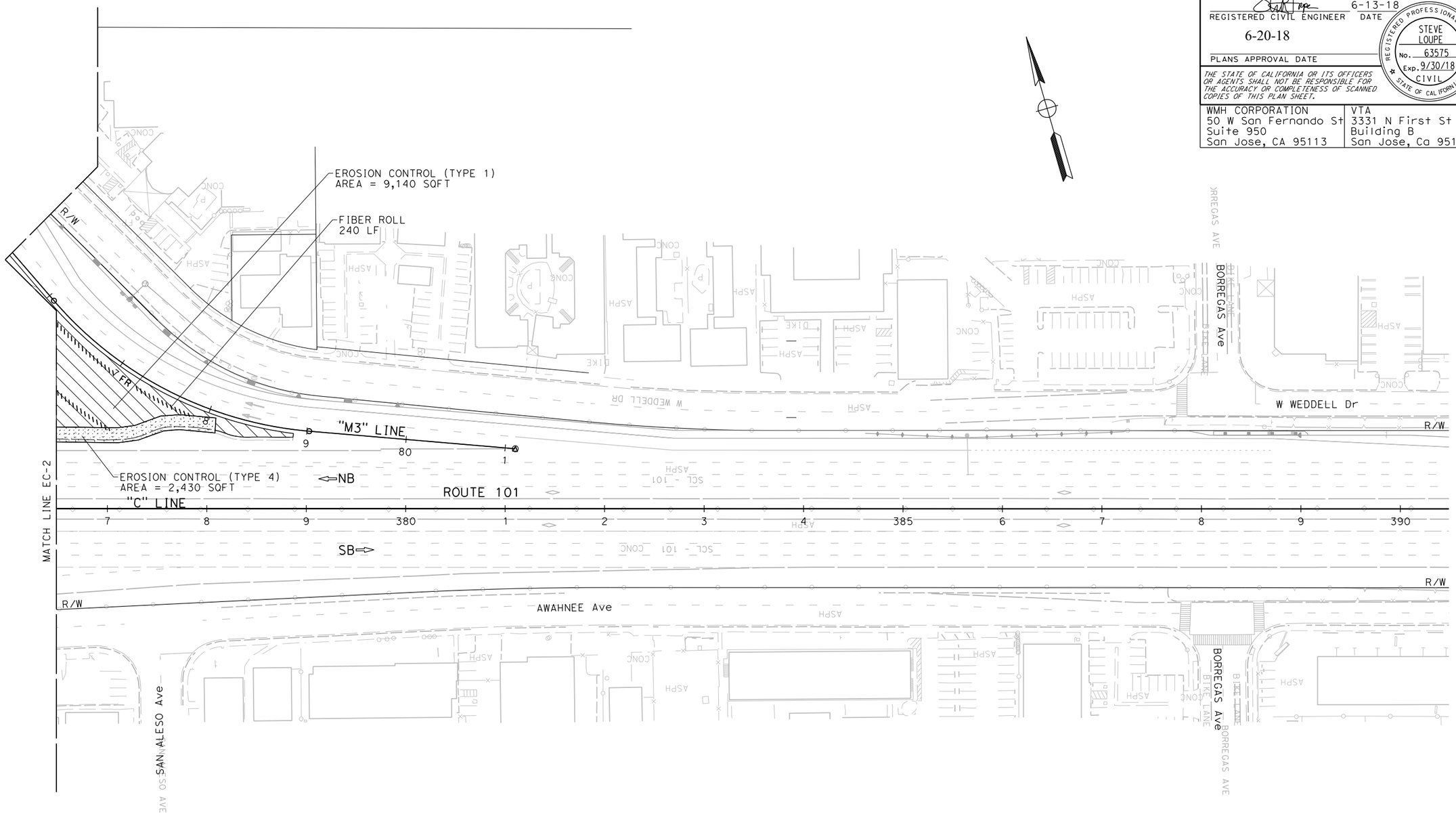

EROSION CONTROL PLAN

SCALE: 1" = 50'

EC-4

FOR NOTES AND LEGEND, SEE SHEET EC-1

APPROVED FOR EROSION CONTROL WORK ONLY

STATE OF CALIFORNIA - DEPARTMENT OF TRANSPORTATION
Caltrans

CONSULTANT FUNCTIONAL SUPERVISOR: TIMOTHY J. LEE
CALCULATED-DESIGNED BY: RICHARD SAGASTUME
CHECKED BY: STEVE LOUPE
REVISED BY: RS
DATE REVISED: 7/21/17
SCV: 05/03/18

X:\237_101_Mathilda\000_CAD\Sheets\TE-Erosion Control\TE-Plans\0413000204te004.dgn

LAST REVISION 01-15-18
DATE PLOTTED => 6/20/2018
TIME PLOTTED => 11:24:38 AM

Dist	COUNTY	ROUTE	POST MILES TOTAL PROJECT	SHEET No.	TOTAL SHEETS
04	SCL	101,237	45.2/45.8, 2.7/3.3	378	736

REGISTERED CIVIL ENGINEER — 6-13-18 DATE

PLANS APPROVAL DATE — 6-20-18

REGISTERED PROFESSIONAL ENGINEER — STEVE LOUPE — No. 63575 — Exp. 9/30/18 — CIVIL — STATE OF CALIFORNIA

THE STATE OF CALIFORNIA OR ITS OFFICERS OR AGENTS SHALL NOT BE RESPONSIBLE FOR THE ACCURACY OR COMPLETENESS OF SCANNED COPIES OF THIS PLAN SHEET.

WMH CORPORATION 50 W San Fernando St Suite 950 San Jose, CA 95113	VTA 3331 N First St Building B San Jose, Ca 95134

DATE REVISED	REVISED BY	CALCULATED-DESIGNED BY	CHECKED BY
05/03/18	SCV	RICHARD SAGASTUME	STEVE LOUPE
7/21/17	RS		

STATE OF CALIFORNIA - DEPARTMENT OF TRANSPORTATION — CONSULTANT FUNCTIONAL SUPERVISOR: TIMOTHY J. LEE

X:\237_101_Mathilda\000_CAD\Sheets\TE-Erosion Control\TE-Plans\0413000204te005.dgn

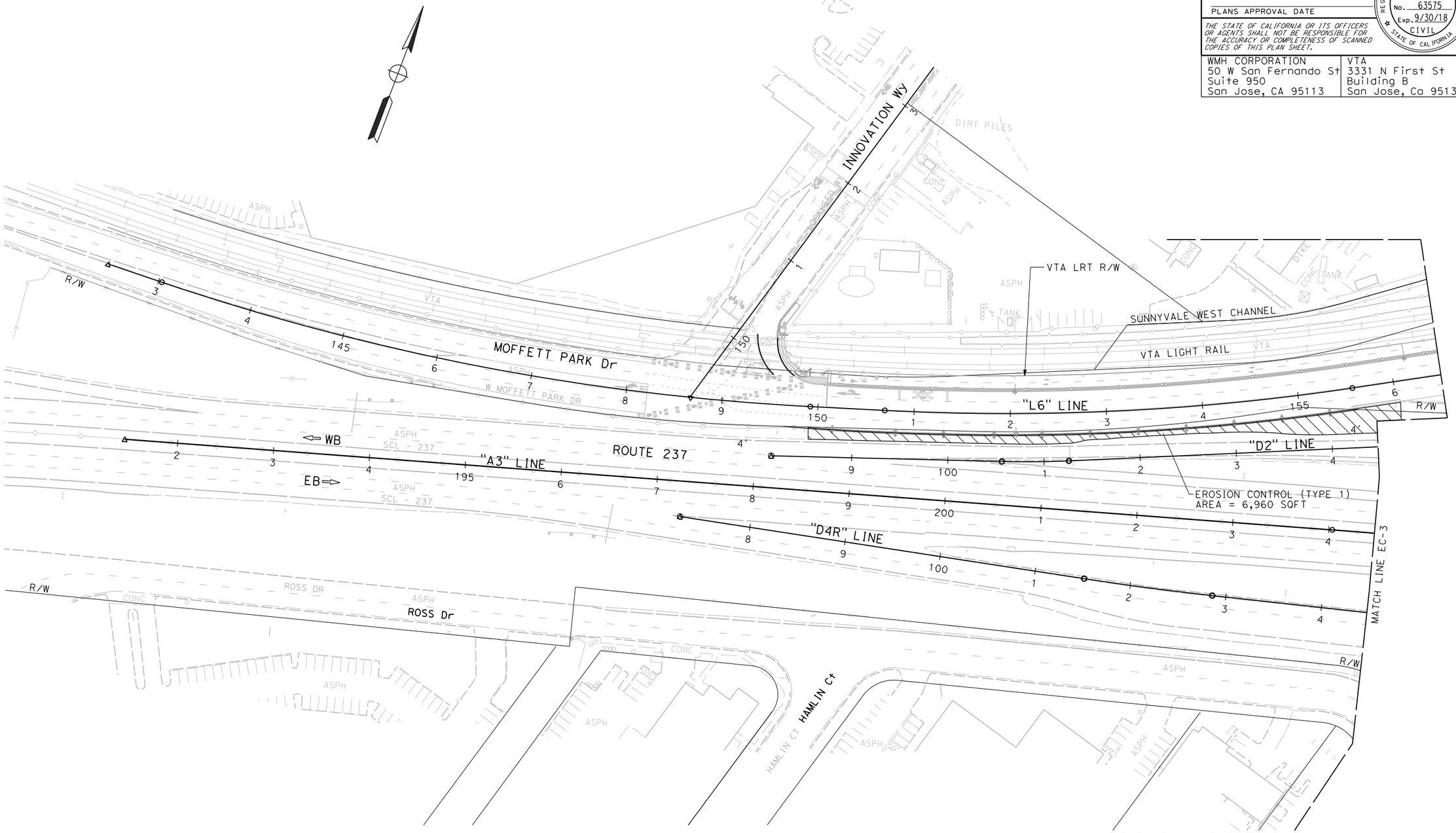

FOR NOTES AND LEGEND, SEE SHEET EC-1

APPROVED FOR EROSION CONTROL WORK ONLY

EROSION CONTROL PLAN

SCALE: 1" = 50'

EC-5

LAST REVISION 01-15-18 — DATE PLOTTED => 6/20/2018 — TIME PLOTTED => 11:24:42 AM

BORDER LAST REVISED 7/2/2010 | USERNAME => Eilif | DGN FILE => 0413000204te005.dgn | RELATIVE BORDER SCALE IS IN INCHES 0 1 2 3 | UNIT 0000 | PROJECT NUMBER & PHASE 0413000204

Dist	COUNTY	ROUTE	POST MILES TOTAL PROJECT	SHEET No.	TOTAL SHEETS
04	SCL	101,237	45.2/45.8, 2.7/3.3	379	736

REGISTERED CIVIL ENGINEER — 6-13-18 DATE

STEVE LOUPE No. 63575 Exp. 9/30/18 CIVIL — REGISTERED PROFESSIONAL ENGINEER — STATE OF CALIFORNIA

6-20-18
PLANS APPROVAL DATE

THE STATE OF CALIFORNIA OR ITS OFFICERS OR AGENTS SHALL NOT BE RESPONSIBLE FOR THE ACCURACY OR COMPLETENESS OF SCANNED COPIES OF THIS PLAN SHEET.

WMH CORPORATION	VTA
50 W San Fernando St	3331 N First St
Suite 950	Building B
San Jose, CA 95113	San Jose, Ca 95134

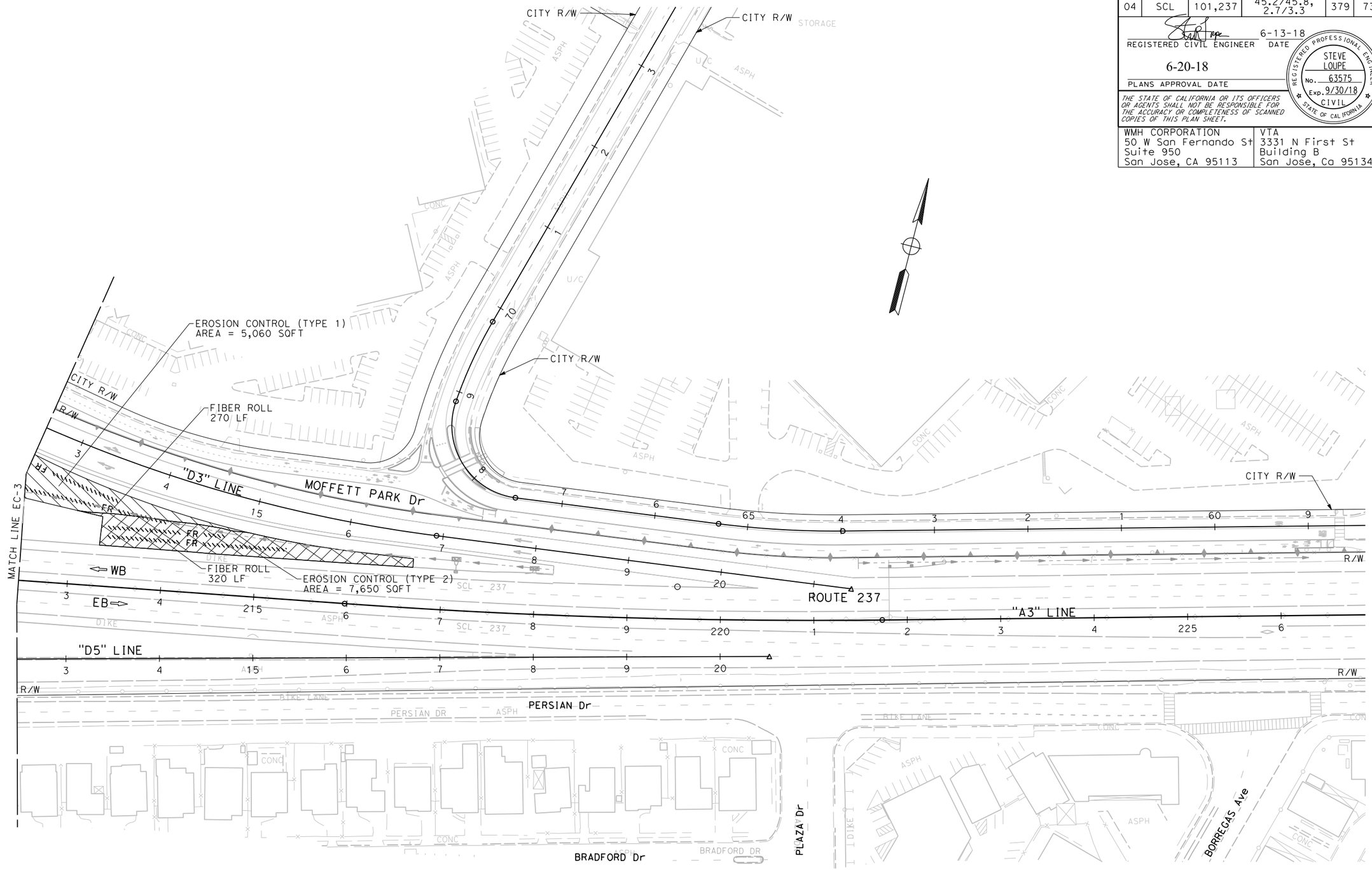

FOR NOTES AND LEGEND, SEE SHEET EC-1

APPROVED FOR EROSION CONTROL WORK ONLY

EROSION CONTROL PLAN

SCALE: 1" = 50'

EC-6

CALCULATED-DESIGNED BY	RICHARD SAGASTUME	REVISED BY	RS	SCV
CHECKED BY	STEVE LOUPE	DATE REVISED	7/21/17	05/03/18

CONSULTANT FUNCTIONAL SUPERVISOR: TIMOTHY J. LEE

STATE OF CALIFORNIA - DEPARTMENT OF TRANSPORTATION

Caltrans

X:\237_101_Mothilda\000_CAD\Sheets\TE-Erosion Control\TE-Plans\0413000204te006.dgn

LAST REVISION: DATE PLOTTED => 6/20/2018; TIME PLOTTED => 11:24:46 AM
01-15-18

BORDER LAST REVISED 7/2/2010	USERNAME => Eilif DGN FILE => 0413000204te006.dgn	RELATIVE BORDER SCALE IS IN INCHES 0 1 2 3	UNIT 0000	PROJECT NUMBER & PHASE	0413000204

NOTE:

AREAS TO BE HYDROSEEDED WILL USE NATIVE SEEDFROM A LOCAL SOURCE.

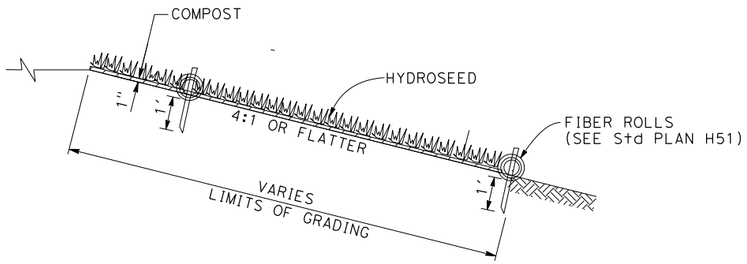

SECTION

EROSION CONTROL (TYPE 1)

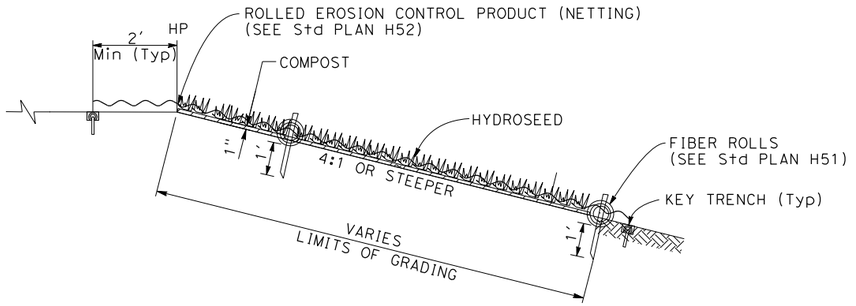

SECTION

EROSION CONTROL (TYPE 2)

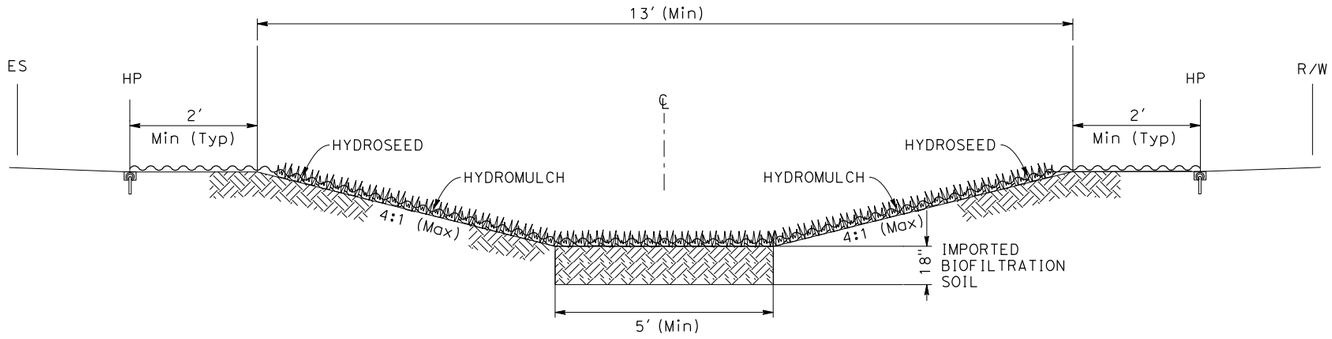

SECTION

EROSION CONTROL (TYPE 3)

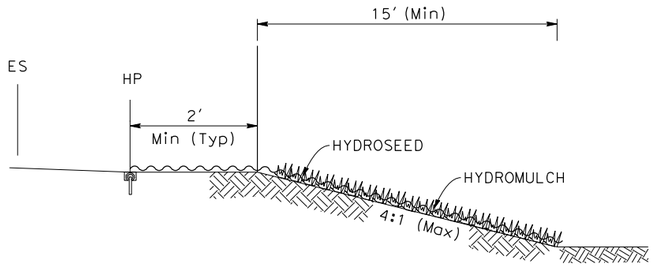

SECTION

EROSION CONTROL (TYPE 4)

EROSION CONTROL DETAILS

ECD-1

Dist	COUNTY	ROUTE	POST MILES TOTAL PROJECT	SHEET No.	TOTAL SHEETS
04	SCL	101,237	45.2/45.8, 2.7/3.3	380	736

REGISTERED CIVIL ENGINEER — DATE: 6-13-18

PLANS APPROVAL DATE: 6-20-18

REGISTERED PROFESSIONAL ENGINEER — STEVE LOUPE — No. 63575 — Exp. 9/30/18 — CIVIL — STATE OF CALIFORNIA

THE STATE OF CALIFORNIA OR ITS OFFICERS OR AGENTS SHALL NOT BE RESPONSIBLE FOR THE ACCURACY OR COMPLETENESS OF SCANNED COPIES OF THIS PLAN SHEET.

WMH CORPORATION
50 W San Fernando St
Suite 950
San Jose, CA 95113

VTA
3331 N First St
Building B
San Jose, Ca 95134

REVISED BY	DATE REVISED
RS	7/21/17
SCV	05/03/18

CALCULATED-DESIGNED BY: RICHARD SAGASTUME
CHECKED BY: STEVE LOUPE
CONSULTANT FUNCTIONAL SUPERVISOR: TIMOTHY J. LEE

STATE OF CALIFORNIA - DEPARTMENT OF TRANSPORTATION

LAST REVISION 01-15-18
DATE PLOTTED => 6/20/2018
TIME PLOTTED => 11:27:01 AM

X:\237_101_Morgan_Hill\000_CAD\Sheets\TE-Erosion Control\TF-Details\0413000204tf001.dgn

Dist	COUNTY	ROUTE	POST MILES TOTAL PROJECT	SHEET No.	TOTAL SHEETS
04	SCL	101,237	45.2/45.8, 2.7/3.3	381	736

REGISTERED CIVIL ENGINEER — DATE 6-13-18

PLANS APPROVAL DATE 6-20-18

REGISTERED PROFESSIONAL ENGINEER — STEVE LOUPE — No. 63575 — Exp. 9/30/18 — CIVIL — STATE OF CALIFORNIA

THE STATE OF CALIFORNIA OR ITS OFFICERS OR AGENTS SHALL NOT BE RESPONSIBLE FOR THE ACCURACY OR COMPLETENESS OF SCANNED COPIES OF THIS PLAN SHEET.

WMH CORPORATION
50 W San Fernando St
Suite 950
San Jose, CA 95113

VTA
3331 N First St
Building B
San Jose, Ca 95134

EROSION CONTROL QUANTITIES

SHEET	DESCRIPTION	HYDROSEED	HYDROMULCH	ROLLED EROSION CONTROL PRODUCT (NETTING)	COMPOST	FIBER ROLLS
		SQFT				LF
EC-1	EC (TYPE 1)	43,260			43,260	1,260
	EC (TYPE 2)	19,400		19,400	19,400	1,140
	EC (TYPE 3)	1,890	1,890			
	EC (TYPE 4)					
EC-2	EC (TYPE 1)	96,420			96,420	2,940
	EC (TYPE 2)	40,800		40,800	40,800	1,880
	EC (TYPE 3)	12,450	12,450			
	EC (TYPE 4)	1,890	1,890			
EC-3	EC (TYPE 1)	40,910			40,910	1,060
	EC (TYPE 2)					
	EC (TYPE 3)					
	EC (TYPE 4)					
EC-4	EC (TYPE 1)	9,140			9,140	240
	EC (TYPE 2)					
	EC (TYPE 3)					
	EC (TYPE 4)	2,430	2,430			
EC-5	EC (TYPE 1)	6,960			6,960	
	EC (TYPE 2)					
	EC (TYPE 3)					
	EC (TYPE 4)					
EC-6	EC (TYPE 1)	5,060			5,060	270
	EC (TYPE 2)	7,650		7,650	7,650	320
	EC (TYPE 3)					
	EC (TYPE 4)					
TOTAL		288,260	18,660	67,850	269,600	9,110

EROSION CONTROL QUANTITIES

ECQ-1

CALCULATED-DESIGNED BY	RICHARD SAGASTUME	REVISED BY	RS
CHECKED BY	STEVE LOUPE	DATE REVISED	7/21/17
		SCV	05/03/18

CONSULTANT FUNCTIONAL SUPERVISOR: TIMOTHY J. LEE

STATE OF CALIFORNIA - DEPARTMENT OF TRANSPORTATION

Caltrans

X:\237_101_Mathilda\000_CAD\Sheets\TE-Erosion Control\TG-Quantities\0413000204tg001.dgn

LAST REVISION 01-15-18 | DATE PLOTTED => 9/17/2018 | TIME PLOTTED => 5:34:00 PM

BORDER LAST REVISED 7/2/2010 | USERNAME => sloupe | DGN FILE => 0413000204tg001.dgn | RELATIVE BORDER SCALE IS IN INCHES 0 1 2 3 | UNIT 0000 | PROJECT NUMBER & PHASE 0413000204

Dist	COUNTY	ROUTE	POST MILES TOTAL PROJECT	SHEET No.	TOTAL SHEETS
04	SCL	101,237	45.2/45.8, 2.7/3.3	382	736

6-13-18
REGISTERED CIVIL ENGINEER — DATE

6-20-18
PLANS APPROVAL DATE

REGISTERED PROFESSIONAL ENGINEER
KIN Y. CHAN
No. 55391
Exp. 12/31/18
CIVIL
STATE OF CALIFORNIA

THE STATE OF CALIFORNIA OR ITS OFFICERS OR AGENTS SHALL NOT BE RESPONSIBLE FOR THE ACCURACY OR COMPLETENESS OF SCANNED COPIES OF THIS PLAN SHEET.

Y&C TRANSPORTATION CONSULTANTS, INC.
3250 Ramos Circle
Sacramento, CA 95827

VTA
3331 N First St
Building B
San Jose, CA 95134

ELECTRICAL INDEX:

E-1	ELECTRICAL INDEX, NOTES, ABBREVIATIONS AND EQUIPMENT LEGEND
E-2 TO E-4	LEGEND
E-5 TO E-17	MODIFYING EXISTING ELECTRICAL SYSTEM
E-18 TO E-22	LIGHTING (CITY STREET)
E-23 TO E-45	SIGNAL AND LIGHTING
E-46 TO E-48	LEGEND (TEMPORARY)
E-49 TO E-56	TEMPORARY LIGHTING SYSTEM
E-57 TO E-68	TEMPORARY RAMP METERING SYSTEM
E-69 TO E-76	TEMPORARY LIGHTING SYSTEM (CITY)
E-77 TO E-165	TEMPORARY SIGNAL AND LIGHTING (CITY)
ED-1 TO ED-11	ELECTRICAL SYSTEMS DETAILS
EQ-1 TO EQ-4	ELECTRICAL SYSTEMS QUANTITIES

NOTES:

1. THE LID OF TRAFFIC PULL BOX MUST BE WELDED TO Z-BAR OF PULL BOX. SEE DETAIL ON SHEET ED-7.
2. ALL CONDUCTORS AND CABLES MUST BE COPPER.

ABBREVIATIONS:

AT&T	AMERICAN TELEPHONE AND TELEGRAPH COMPANY
EVUDa	EMERGENCY VEHICLE UNIT DETECTOR (CHANNEL a)
FDU	FIBER OPTIC DISTRIBUTION UNIT
HCC	HYBRID CAMERA CABLE
NRT	NO RIGHT TURN
PG&E	PACIFIC GAS AND ELECTRIC COMPANY
PTZ	PAN TILT ZOOM
SMFO	SINGLE MODE FIBER OPTIC
TVC	TV CONTROL CABLE
TVCP	TV CONTROL POWER CABLE
TVL	TV LINE CABLE
TVP	TV POWER CABLE
TC	TELEPHONE CABLE

* FOR ALL OTHER ABBREVIATIONS, SEE CALTRANS STANDARD PLANS A3A THROUGH A3C.

EQUIPMENT LEGEND:

NEW / Exist

RAMP METER SIGNAL, POLE-MOUNTED

EMS

EMS ON WOOD POSTS

THERMAL PEDESTRIAN DETECTION CAMERA

CITY OF SUNNYVALE RED LIGHT ENFORCEMENT UNIT

THERMAL VEHICLE DETECTION CAMERA

STAND-ALONE BBS

NRT

R3-1 ACTIVATED BLANK-OUT SIGN

A1
Ckt No.

CITY STANDARD TYPE III 30' CONCRETE POLE, 8' LMA, 65 W LED PHILIPS ROADFOCUS LUMINAIRE (MODEL No. RFM-72W32LED4K-009-G2-R3M-UNV-DMG-RCD7-SP2-API-GY3) OR APPROVED EQUAL WITH LUMEWAVE WIRELESS OUTDOOR CONTROLLER (MODEL No. TOP900TL-GRY) OR APPROVED EQUAL

A1 A2
Ckt No.

CITY STANDARD TYPE III 30' CONCRETE POLE, DUAL 8' LMAs, TWO (2) 65 W LED PHILIPS ROADFOCUS LUMINAIRES (MODEL No. RFM-72W32LED4K-009-G2-R3M-UNV-DMG-RCD7-SP2-API-GY3) OR APPROVED EQUAL WITH LUMEWAVE WIRELESS OUTDOOR CONTROLLER (MODEL No. TOP900TL-GRY) OR APPROVED EQUAL

A1
Ckt No.

CITY STANDARD TYPE III 30' CONCRETE POLE ON STRUCTURE, 8' LMA, 65 W LED PHILIPS ROADFOCUS LUMINAIRE (MODEL No. RFM-72W32LED4K-009-G2-R3M-UNV-DMG-RCD7-SP2-API-GY3) OR APPROVED EQUAL WITH LUMEWAVE WIRELESS OUTDOOR CONTROLLER (MODEL No. TOP900TL-GRY) OR APPROVED EQUAL

* FOR ALL OTHER LEGENDS, SEE CALTRANS STANDARD PLANS RSP ES-1A THROUGH RSP ES-1C.

ELECTRICAL INDEX, NOTES, ABBREVIATIONS AND EQUIPMENT LEGEND

E-1

REVISED BY	DATE REVISED

CALCULATED-DESIGNED BY: MENG YANG
CHECKED BY: DAN YAU
CONSULTANT FUNCTIONAL SUPERVISOR: TIMOTHY J. LEE
STATE OF CALIFORNIA - DEPARTMENT OF TRANSPORTATION
Caltrans

LAST REVISION 00-00-00
DATE PLOTTED => $DATE
TIME PLOTTED => $TIME

BORDER LAST REVISED 7/2/2010
USERNAME => $USER
DGN FILE => $REQUEST
RELATIVE BORDER SCALE IS IN INCHES 0 1 2 3
UNIT 0712
PROJECT NUMBER & PHASE 0413000204

Dist	COUNTY	ROUTE	POST MILES TOTAL PROJECT	SHEET No.	TOTAL SHEETS
04	SCL	101,237	45.2/45.8, 2.7/3.3	383	736

6-13-18
REGISTERED CIVIL ENGINEER DATE

6-20-18
PLANS APPROVAL DATE

REGISTERED PROFESSIONAL ENGINEER
KIN Y. CHAN
No. 55391
Exp. 12/31/18
CIVIL
STATE OF CALIFORNIA

THE STATE OF CALIFORNIA OR ITS OFFICERS OR AGENTS SHALL NOT BE RESPONSIBLE FOR THE ACCURACY OR COMPLETENESS OF SCANNED COPIES OF THIS PLAN SHEET.

Y&C TRANSPORTATION CONSULTANTS, INC.
3250 Ramos Circle
Sacramento, CA 95827

VTA
3331 N First St
Building B
San Jose, CA 95134

LEGEND: (FOR SHEETS E-5 TO E-45)

1 INSTALL CITY'S STANDARD Ltg ON STRUCTURE.

2 Exist 1"C, 2#8 (240 V SOFFIT Ltg).

3 Exist TRAFFIC SIGNAL CONTROLLER ASSEMBLY.

4 SEE SHEET ED-4 FOR LOOP LAYOUT AND INSTALLATION DETAILS.

5 INSTALL CONDUIT THROUGH WALL.

6 INSTALL BLUETOOTH BASED TRAVEL TIME CALCULATION AND PERFORMANCE MEASUREMENT SYSTEM (VANTAGE VELOCITY OR APPROVED EQUAL) INSIDE THE CONTROLLER ASSEMBLY.

7 3"C, 1 SMFO CABLE (144-STRAND).

8 3"C, PT.

9 FURNISH AND INSTALL MODEL 2070LDX CONTROLLER UNIT WITH MODEL 332L CONTROLLER CABINET AND FIBER OPTIC ETHERNET SWITCH, FDU, PIGTAILS AND ALL OTHER NECESSARY NETWORK EQUIPMENT.

10 INSTALL STAND-ALONE BBS SYSTEM WITH NEMA 3R CABINET.

11 INSTALL TYPE III-AF SERVICE EQUIPMENT ENCLOSURE.

12 INSTALL FIBER OPTIC VAULT AND SPLICE ENCLOSURE. SEE SHEET ED-8 TO ED-11 FOR DETAILS.

13 INSTALL 4-SECTION VEHICLE SIGNAL HEAD. SEE DETAIL A ON SHEET E-26.

14 RS Exist CONTROLLER ASSEMBLIES, TYPE III SERVICE EQUIPMENT ENCLOSURES AND BBS TO CITY. RC PULL BOXES. AB CONDUITS.

15 COORDINATE WITH PG&E FOR SERVICE CONNECTION.

16 INSTALL 3-SECTION VEHICLE SIGNAL HEAD. SEE DETAIL B ON SHEET E-26.

17 3"C, 1 SMFO CABLE (12-STRAND).

18 Exist TYPE III SERVICE EQUIPMENT ENCLOSURE.

19 Exist TYPE P CONTROLLER ASSEMBLY. INSTALL NETWORK ETHERNET SWITCH, FDU, PIGTAILS AND ALL NECESSARY NETWORK EQUIPMENT.

20 RC Exist PULL BOX. INSTALL A NEW PULL BOX AS INDICATED.

21 REPROGRAM VIDEO DETECTION ZONE.

22 SC BY PG&E.

23 3"C, 3#2 (SERVICE).

24 2"C, 2#6 (CONTROLLER).

25 CONSTRUCT PCC PAD (19'L x 5'W x 4"D). SEE DETAIL C ON SHEET E-26 FOR EQUIPMENT LAYOUT.

26 2"C, 3 DLC.

27 2"C, 4 DLC.

28 2"C, 1 THERMAL VEHICLE DETECTION CABLE.

29 2"C, 2#8 (240 V Ltg), 2#10 (240 V IISNS), 3#14 (PEU).

30 INSTALL EMTRAC GPS EVUD ON POLE PER MANUFACTURER'S RECOMMENDATION.

31 CONTRACTOR SHALL USE CAUTION WHEN INSTALLING POLE NEAR UTILITIES.

32 INSTALL RED RAT BOX TO SIGNAL MOUNTING FOR THROUGH TRAFFIC RED LIGHT ENFORCEMENT. SEE DETAIL A ON SHEET E-27. SEE POLE AND EQUIPMENT SCHEDULE FOR PHASE DESIGNATION.

33 INSTALL BLUE RAT BOX TO SIGNAL MOUNTING FOR LEFT TURN TRAFFIC RED LIGHT ENFORCEMENT. SEE DETAIL A ON SHEET E-27. SEE POLE AND EQUIPMENT SCHEDULE FOR PHASE DESIGNATION.

34 INSTALL THERMAL VEHICLE DETECTION CAMERA TO SMA PER MANUFACTURER'S RECOMMENDATION.

35 INSTALL CCTV TO POLE PER MANUFACTURER'S RECOMMENDATION.

36 2"C, 1 CCTV CABLE.

37 INSTALL THERMAL PEDESTRIAN DETECTION CAMERA TO POLE PER MANUFACTURER'S RECOMMENDATION.

38 Exist SERVICE CONDUIT AND CONDUCTORS.

39 2"C 2#8 (480 V Ltg).

40 2"C, 5 DLC.

41 Exist 1½"C, 4#8 (480 V Ltg).

42 2"C, 4#8 (480 V Ltg), 3#14 (PEU).

43 Exist 1½"C, 2 TC. RC 2 TC. ADD 2 TC.

44 Exist 1½"C, 2#8 (120 V TDC), 2#10 (120 V FB), 2 DLC. RC 2#10, 1 DLC. ADD 2#8 (120 V FB), 1 DLC.

45 Exist 2"C, 6#14, 1#8, 2 DLC.

46 Exist 3"C, 9#14, 1#8, 12 DLC.

47 Exist 2-3"C, 9#14, 1#8, 2#6 (120 V RM), 2#10 (120 V FB), 14 DLC, 1 HCC. RC 2#10, 1 DLC. ADD 2#10 (120 V FB), 1 DLC.

48 Exist 2"C, 1 HCC.

49 Exist 1½"C, 4#6 (120 V RM), 2#8 (120 V TDC).

50 Exist 1½"C, 4#6 (120 V RM), 2#10 (120 V FB), 2 DLC. RC 2#10, 1 DLC. ADD 2#8 (120 V FB), 1 DLC.

51 Exist 1½"C, 2#6 (120 V RM), 2#10 (120 V FB), 2 DLC. RC 2#10, 1 DLC. ADD 2#8 (120 V FB), 1 DLC.

52 Exist 1½"C, 1 TC. RC 1 TC. ADD 1 TC.

53 2"C, 2#6 (120 V RM), 2#8 (120 V FB), 2 DLC.

54 Exist 3"C, 9#14, 1#8, 13 DLC.

55 Exist 2-3"C, 9#14, 1#8, 2#6 (120 V RM), 4#8 (EMS), 2#10 (120 V FB), 15 DLC. RC 2#10, 2 DLC. ADD 2#8 (120 V FB), 2 DLC.

56 Exist 3"C, 6#14, 1#8, 11 DLC.

57 Exist 2"C, 2#6 (120 V RM), 2#6 (120 V HAR), 2#6 (120 V CCTV), 2#10 (120 V TDC).

58 INSTALL TYPE 1-B STANDARD WITH RAMP METER SIGNAL. SEE DETAIL "SIG" ON SHEET ED-6.

59 Exist 2"C, 2#6 (120 V RM), 2#6 (120 V CCTV), 2#6 (120 V HAR), 1 DLC. RC 1 DLC. ADD 2 DLC.

60 2"C, 2#6 (120 V RM), 2#8 (120 V FB), 1 DLC.

61 2"C, 2#8 (120 V TDC), 2#8 (120 V FB), 1 DLC.

62 Exist 2-3"C, 2#6 (120 V HAR), 1 ANTENNA COAXIAL CABLE.

63 Exist 1½"C, 1 TELEPHONE LINE.

64 Exist 2-3"C, 9#14, 1#8, 2#6 (120 V RM), 2#10 (120 V FB), 16 DLC. RC 16 DLC. ADD 19 DLC.

65 Exist 3"C, 9#14, 1#8, 2#6 (120 V RM), 14 DLC. RC 14 DLC. ADD 14 DLC.

66 3"C, 6#14, 1#8, 2#6 (120 V RM), 12 DLC.

67 Exist 2"C, 2#6 (120 V CCTV), 2#6 (120 V HAR).

68 Exist 2"C, 2#6 (120 V RM), 9 DLC. RC 9 DLC. ADD 10 DLC.

69 Exist 2-3"C, 2#6 (120 V CCTV), 1 HCC.

70 Exist 2"C, 2#6 (120 V HAR).

71 Exist 2"C, 6#14, 1#8, 6 DLC. ADD 6 DLC.

72 Exist 2"C, 6#14, 1#8, 6 DLC. ADD 2#8 (120 V FB), 6 DLC.

73 Exist 2-3"C, 6#14, 1#8, 2#6 (120 V RM), 2#10 (120 V FB), 8 DLC. RC 2#10. ADD 2#8 (120 V FB), 6 DLC.

74 Exist 2"C, 2#6 (120 V RM), 2#8 (240 V Ltg), 2#10 (120 V Irr).

75 INSTALL TYPE 15-FBS STANDARD WITH YELLOW FLASHING BEACONS AND FBCA. SEE SIGN PLAN FOR SIGN MOUNTING ON STANDARD.

76 SEE BARRIER REPLACEMENT DETAILS No. 1 AND No. 2.

77 INSTALL TYPE 1-B STANDARD WITH PEU.

78 Exist 2"C, 2#6 (120 V RM).

79 Exist 1½"C, 2#8 (240 V Ltg), 2#8 (240 V SIGN Ltg), 3#14 (PEU). RC 2#8 (240 V SIGN Ltg).

80 Exist 1½"C, 4#8. RC 4#8. ADD 2#8 (240 V Ltg).

81 Exist 1½"C, 2#8 (480 V Ltg).

82 COVER SHALL BE MARKED AS "CALTRANS/PG&E". THIS IS A PG&E TERMINATION POINT.

83 Exist 2"C, 2#10 (120 V FB), 2 DLC. RC 2#10. ADD 2#8 (120 V FB).

84 2"C, 2#8 (240 V Ltg).

85 Exist MODEL 170 CONTROLLER ASSEMBLY IN MODEL 334 CABINET.

REVISED BY	DATE REVISED
MENG YANG	DAN YAU
CALCULATED-DESIGNED BY	CHECKED BY
CONSULTANT FUNCTIONAL SUPERVISOR	TIMOTHY J.LEE

STATE OF CALIFORNIA - DEPARTMENT OF TRANSPORTATION
Caltrans

LAST REVISION 00-00-00
DATE PLOTTED => $DATE
TIME PLOTTED => $TIME

LEGEND
E-2

Dist	COUNTY	ROUTE	POST MILES TOTAL PROJECT	SHEET No.	TOTAL SHEETS
04	SCL	101,237	45.2/45.8, 2.7/3.3	384	736

6-13-18
REGISTERED CIVIL ENGINEER DATE

6-20-18
PLANS APPROVAL DATE

REGISTERED PROFESSIONAL ENGINEER
KIN Y. CHAN
No. 55391
Exp. 12/31/18
CIVIL
STATE OF CALIFORNIA

THE STATE OF CALIFORNIA OR ITS OFFICERS OR AGENTS SHALL NOT BE RESPONSIBLE FOR THE ACCURACY OR COMPLETENESS OF SCANNED COPIES OF THIS PLAN SHEET.

Y&C TRANSPORTATION CONSULTANTS, INC.
3250 Ramos Circle
Sacramento, CA 95827

VTA
3331 N First St
Building B
San Jose, CA 95134

LEGEND: (FOR SHEETS E-5 TO E-45)

86 INSTALL TYPE 15-FBS STANDARD WITH YELLOW FLASHING BEACONS AND FBCA ON BARRIER. SEE DETAIL ON SHEET ED-6. SEE SIGN PLAN FOR SIGN MOUNTING ON STANDARD. SEE SHEET C-57 FOR BARRIER INSTALLATION.

87 Exist HAR CONTROLLER ASSEMBLY IN MODEL 334 CABINET.

88 2"C, 2#6 (120 V RM), 2#6 (120 V CCTV), 2#6 (120 V HAR), 2 DLC.

89 2"C, 2#6 (120 V RM), 2#6 (120 V CCTV), 2#6 (120 V HAR).

90 RL Exist CCTV 40 POLE AND CAMERA. CONSTRUCT NEW FOUNDATION.

91 1½"C, 2 TC.

92 2"C, 2#6 (240 V Ltg, Ckt A2).

93 2"C, 4#6 (240 V Ltg, Ckt A1 & A2).

94 INSTALL No. 2 PULL BOX PER SERVICE UTILITY REQUIREMENTS.

95 2"C, 2#6 (240 V Ltg, Ckt B1).

96 2"C, 4#6 (240 V Ltg, Ckt B1 & B2).

97 2"C, 4#6 (240 V Ltg, Ckt B1 & B2), 3#14 (PEU).

98 SEE DETAIL A ON SHEET ED-5 FOR POLE LOCATION.

99 SEE DETAIL C ON SHEET ED-5 FOR POLE LOCATION.

100 AB Exist VEHICLE DETECTION LOOPS. INSTALL NEW VEHICLE DETECTION LOOPS AND VEHICLE DETECTOR HANDHOLES AS INDICATED.

101 Exist 2"C, 5 DLC.

102 Exist 1½"C, 4#8. RC 4#8. ADD 4#8 (480 V Ltg).

103 Exist 3"C, 1 SIC, 1 SMFO CABLE (12-STRAND). RC 1 SIC.

104 SEE DETAIL B ON SHEET ED-5 FOR POLE LOCATION.

105 Exist 2"C, 4#14 (120 V IISNS), 3#14 (PEU), 6#14 (SPARE), 2#6 (120 V CONTROLLER), 4#8 (240 V Ltg).

106 Exist 3"C, 1 SMFO CABLE (144 STRAND).

107 Exist 2"C, 2 DLC.

108 Exist 2"C, 1 SIC.

109 Exist 2"C, 3 DLC.

110 Exist 2"C, 2#8 (240 V Ltg), 2#14 (120 V IISNS), 3#14(PEU). RC 2#14. ADD 2#10 (120 V IISNS).

111 Exist 2"C, 2#6 (120 V CONTROLLER).

112 SEE SHEET E-28 FOR CAMERA LOCATION.

113 2"C, 2#6 (240 V Ltg, Ckt A1).

114 Exist 2"C, 3 DLC, 1 SIC. RC 3 DLC. ADD 3 DLC.

115 PULL BACK 1 SIC FROM Exist CONTROLLER CABINET TO THIS PULL BOX. REINSTALL 1 SIC FROM THIS PULL BOX TO Exist CONTROLLER CABINET IN CONDUITS AS INDICATED.

116 2"C, 3 DLC. INSTALL Exist 1 SIC, SEE NOTE 115.

117 Exist 3"C, 3 DLC, 2 SIC. RC 3 DLC, 1 SIC. REINSTALL Exist 1 SIC, SEE NOTE 115.

118 Exist 3"C, 3 DLC, 2 SIC. RC 3 DLC, 1 SIC. ADD 1 SMFO CABLE (12-STRAND). REINSTALL Exist 1 SIC, SEE NOTE 115.

119 Exist 2"C, 2#8 (240 V Ltg).

120 2"C, 2#10 (120 V Irr).

121 CONSTRUCT PCC PAD (19'L x 5'W x 4"D). SEE DETAIL A ON SHEET E-34 FOR EQUIPMENT LAYOUT.

122 INSTALL CONDUIT IN BARRIER. SEE BARRIER REPLACEMENT DETAILS No. 1.

123 2"C, 2 DLC.

124 INSTALL 3 SECTION VEHICLE SIGNAL HEAD WITH PROGRAMMABLE LOUVER TO Exist POLE.

125 AB Exist VEHICLE DETECTION LOOPS. PROGRAM VIDEO DETECTION ZONE AS INDICATED.

126 1½"C, 2#8 (240 V Ltg).

127 INSTALL SPEC 1C SIGN ON SMA. SEE SIGN PLAN FOR SIGN PANEL DETAILS.

128 SEE STRUCTURAL DETAIL ON SHEET C-57.

129 Exist 2"C, 2 SIC. RC 1 SIC. REINSTALL 1 SIC. ADD 1 SMFO CABLE (12-STRAND).

130 Exist 2"C, 2#6 (120 V CONTROLLER), 2#10 (240 V Ltg), 2#10 (120 V IISNS), 3#14 (PEU).

131 RS Exist HPS Lum. INSTALL NEW 108 W LED Lum.

132 SEE CALTRANS STANDARD PLAN RSP B11-55 FOR DETAILS.

133 SEE STRUCTURAL DETAIL ON SHEET C-56.

134 2"C, 2#8 (240 V SOFFIT Ltg).

135 Exist 1"C, 2#8 (240 V SOFFIT Ltg), 2#8 (240 V SIGN Ltg), 2#14 (120 V SIGN TEST SWITCH). RC 2#8 (240 V SIGN Ltg), 2#14 (120 V SIGN TEST SWITCH).

136 SEE SHEET E-19 FOR SERVICE POINT DETAILS.

137 2"C, 4#6 (240 V Ltg, Ckt A1 & A2), 2#8 (240 V SOFFIT Ltg).

138 2"C, 2#8 (240 V Ltg), 2#10 (240 V IISNS), 2#10 (120 V Irr), 3#14 (PEU).

139 Exist CITY STREET LIGHT TO REMAIN. PROTECT IN-PLACE.

140 PROTECT Exist CONDUIT AND CONDUCTOR(S)/CABLE(S) IN PLACE.

141 Exist 1½"C, 2#8 (240 V Ltg).

142 FURNISH AND INSTALL TYPE III-AF METERED/UNMETERED SERVICE EQUIPMENT ENCLOSURE. SEE WIRING DIAGRAM ON SHEET ED-3.

143 INSTALL FIBER OPTIC/COPPER ETHERNET SWITCH, FDU, PIGTAILS AND ALL NECESSARY NETWORK EQUIPMENT INSIDE Exist CONTROLLER ASSEMBLY.

144 2"C, 4#8 (480 V Ltg).

145 Exist 2"C, 4 DLC. ADD 6 DLC.

146 INSTALL THREE DEPARTMENT-FURNISHED LOOP DETECTOR SENSORS FOR NEW LOOPS.

147 Exist 2"C, 2#8. RC 2#8. ADD 2#8 (240 V Ltg).

148 INSTALL R3-1 ACTIVATED BLANK-OUT SIGN. SEE DETAIL A ON SHEET E-25.

149 Exist 2"C, 1 SIC. RC 1 SIC. ADD 1 SMFO CABLE (144-STRAND).

150 SEE LANDSCAPE PLAN FOR EXACT LOCATION OF IRRIGATION CONTROLLER.

151 INSTALL CONDUIT IN BRIDGE SIDEWALK. SEE SHEET BARRIER REPLACEMENT DETAILS No. 2.

152 CONSTRUCT PCC PAD (22'L x 8'W x 4"D). SEE DETAIL A ON SHEET E-31 FOR EQUIPMENT LAYOUT.

153 INSTALL THERMAL DETECTION CAMERA TO POLE PER MANUFACTURER'S RECOMMENDATION.

154 INSTALL TENON TO SMA. CAP TENON FOR FUTURE USE.

155 2"C, 1 TC.

156 Exist 1½"C, 1 TC. RC 1 TC TO TSP. ADD ONE TC FROM TSP TO NEW CONTROLLER ASSEMBLY THROUGH NEW AND Exist CONDUITS. CONTRACTOR TO VERIFY THE EXACT LOCATION OF Exist TSP (APPROXIMATELY 300' WEST OF THIS INTERSECTION).

157 INSTALL R3-1 ACTIVATED BLANK-OUT SIGN. SEE DETAIL A ON SHEET E-32.

158 INSTALL R3-1 ACTIVATED BLANK-OUT SIGN. SEE DETAIL B ON SHEET E-32.

159 3"C, 2 SMFO CABLES (144-STRAND).

160 SEE SHEET ED-9 TO ED-11 FOR FIBER OPTIC SPLICE DETAILS.

161 INSTALL RELOCATED CCTV TO POLE.

162 INSTALL TWO DEPARTMENT-FURNISHED LOOP DETECTOR SENSOR UNIT FOR NEW LOOPS.

163 INSTALL 3-SECTION BICYCLE SIGNAL HEAD TO EXISTING STANDARD.

164 RC Exist 8" 3-SECTION VEHICLE SIGNAL HEAD. INSTALL 12" 3-SECTION VEHICLE SIGNAL HEAD.

165 2"C, 2#6 (240 V Ltg, Ckt A2), 3#14 (PEU).

166 2"C, 4#6 (240 V Ltg, Ckt A1 & A2), 3#14 (PEU).

167 2"C, 4#6 (240 V Ltg, Ckt A1 & A2), 2#8 (240 V SOFFIT Ltg), 3#14 (PEU).

168 INSTALL TYPE 15-FBS STANDARD WITH FIXED BASE, YELLOW FLASHING BEACONS AND FBCA ON BARRIER. SEE DETAIL ON SHEET ED-6. SEE SIGN PLAN FOR SIGN MOUNTING ON STANDARD.

169 SEE DETAIL D ON SHEET ED-5 FOR POLE LOCATION.

LEGEND
E-3

REVISED BY	DATE REVISED
MENG YANG	DAN YAU
CALCULATED-DESIGNED BY	CHECKED BY
CONSULTANT FUNCTIONAL SUPERVISOR	TIMOTHY J.LEE

STATE OF CALIFORNIA - DEPARTMENT OF TRANSPORTATION
Caltrans

LAST REVISION 00-00-00
DATE PLOTTED => $DATE
TIME PLOTTED => $TIME

BORDER LAST REVISED 7/2/2010
USERNAME => $USER
DGN FILE => $REQUEST
RELATIVE BORDER SCALE IS IN INCHES 0 1 2 3
UNIT 0712
PROJECT NUMBER & PHASE 0413000204

Dist	COUNTY	ROUTE	POST MILES TOTAL PROJECT	SHEET No.	TOTAL SHEETS
04	SCL	101,237	45.2/45.8, 2.7/3.3	385	736

6-13-18
REGISTERED CIVIL ENGINEER DATE

6-20-18
PLANS APPROVAL DATE

REGISTERED PROFESSIONAL ENGINEER
KIN Y. CHAN
No. 55391
Exp. 12/31/18
CIVIL
STATE OF CALIFORNIA

THE STATE OF CALIFORNIA OR ITS OFFICERS OR AGENTS SHALL NOT BE RESPONSIBLE FOR THE ACCURACY OR COMPLETENESS OF SCANNED COPIES OF THIS PLAN SHEET.

Y&C TRANSPORTATION CONSULTANTS, INC.
3250 Ramos Circle
Sacramento, CA 95827

VTA
3331 N First St
Building B
San Jose, CA 95134

LEGEND: (FOR SHEETS E-5 TO E-45)

170 INSTALL 4-SECTION VEHICLE SIGNAL HEAD. SEE DETAIL A ON SHEET E-28.

171 RC HPS LUMINAIRE. INSTALL 65 W LED LUMINAIRE.

172 MOUNT SIGNAL HEAD 17′ ABOVE GROUND.

173 INSTALL LMA 90 DEGREES FROM SIGNAL POLE AS SHOWN.

174 CONSTRUCT PCC PAD (19′L x 4′W x 4"D). SEE DETAIL A ON SHEET E-38 FOR EQUIPMENT LAYOUT.

175 Exist 2"C, 1 SMFO CABLE (144 STRAND).

176 ADD 1 SMFO CABLE (144 STRAND) IN Exist 3"C TO INNOVATION WAY @ BORDEAUX DR (±800′). SEE SHEET E-44 FOR CONTINUATION.

177 2-1½"C (TYPE 1), PT (FUTURE CITY FIBER OPTIC CABLE). INSTALL CONDUIT IN Exist 4" STEEL SLEEVE IN BRIDGE BARRIER.

178 1-1½"C (TYPE 1),3#2 (SERVICE). INSTALL CONDUIT IN Exist 4" STEEL SLEEVE IN BRIDGE BARRIER.

179 INSTALL THERMAL VEHICLE DETECTION CAMERA TO LMA PER MANUFACTURER'S RECOMMENDATION.

180 2"C, 1 DLC.

181 CONSTRUCT PCC PAD (18′L x 5′W x 4"D). SEE DETAIL A ON SHEET E-44 FOR EQUIPMENT LAYOUT.

182 ADD 1 SMFO CABLE (144 STRAND) IN Exist 3"C TO MATHILDA AVE @ INNOVATION WAY (±800′). SEE SHEET E-40 FOR CONTINUATION.

183 BRIDGE L+g MUST BE VIBRATION-RESISTANT PER MANUFACTURER'S RECOMMENDATION.

REVISED BY | DATE REVISED
MENG YANG | DAN YAU
CALCULATED-DESIGNED BY | CHECKED BY
CONSULTANT FUNCTIONAL SUPERVISOR: TIMOTHY J. LEE
STATE OF CALIFORNIA - DEPARTMENT OF TRANSPORTATION

LEGEND

E-4

LAST REVISION 00-00-00 | DATE PLOTTED => $DATE | TIME PLOTTED => $TIME

BORDER LAST REVISED 7/2/2010 | USERNAME => $USER | DGN FILE => $REQUEST | RELATIVE BORDER SCALE IS IN INCHES 0 1 2 3 | UNIT 0712 | PROJECT NUMBER & PHASE 0413000204

Dist	COUNTY	ROUTE	POST MILES TOTAL PROJECT	SHEET No.	TOTAL SHEETS
04	SCL	101,237	45.2/45.8, 2.7/3.3	386	736

REGISTERED CIVIL ENGINEER 6-13-18 DATE

6-20-18
PLANS APPROVAL DATE

REGISTERED PROFESSIONAL ENGINEER KIN Y. CHAN No. 55391 Exp. 12/31/18 CIVIL STATE OF CALIFORNIA

THE STATE OF CALIFORNIA OR ITS OFFICERS OR AGENTS SHALL NOT BE RESPONSIBLE FOR THE ACCURACY OR COMPLETENESS OF SCANNED COPIES OF THIS PLAN SHEET.

Y&C TRANSPORTATION CONSULTANTS, INC.
3250 Ramos Circle
Sacramento, CA 95827

VTA
3331 N First St
Building B
San Jose, CA 95134

NOTE:
FOR ACCURATE RIGHT OF WAY DATA, CONTACT RIGHT OF WAY ENGINEERING AT THE DISTRICT OFFICE.

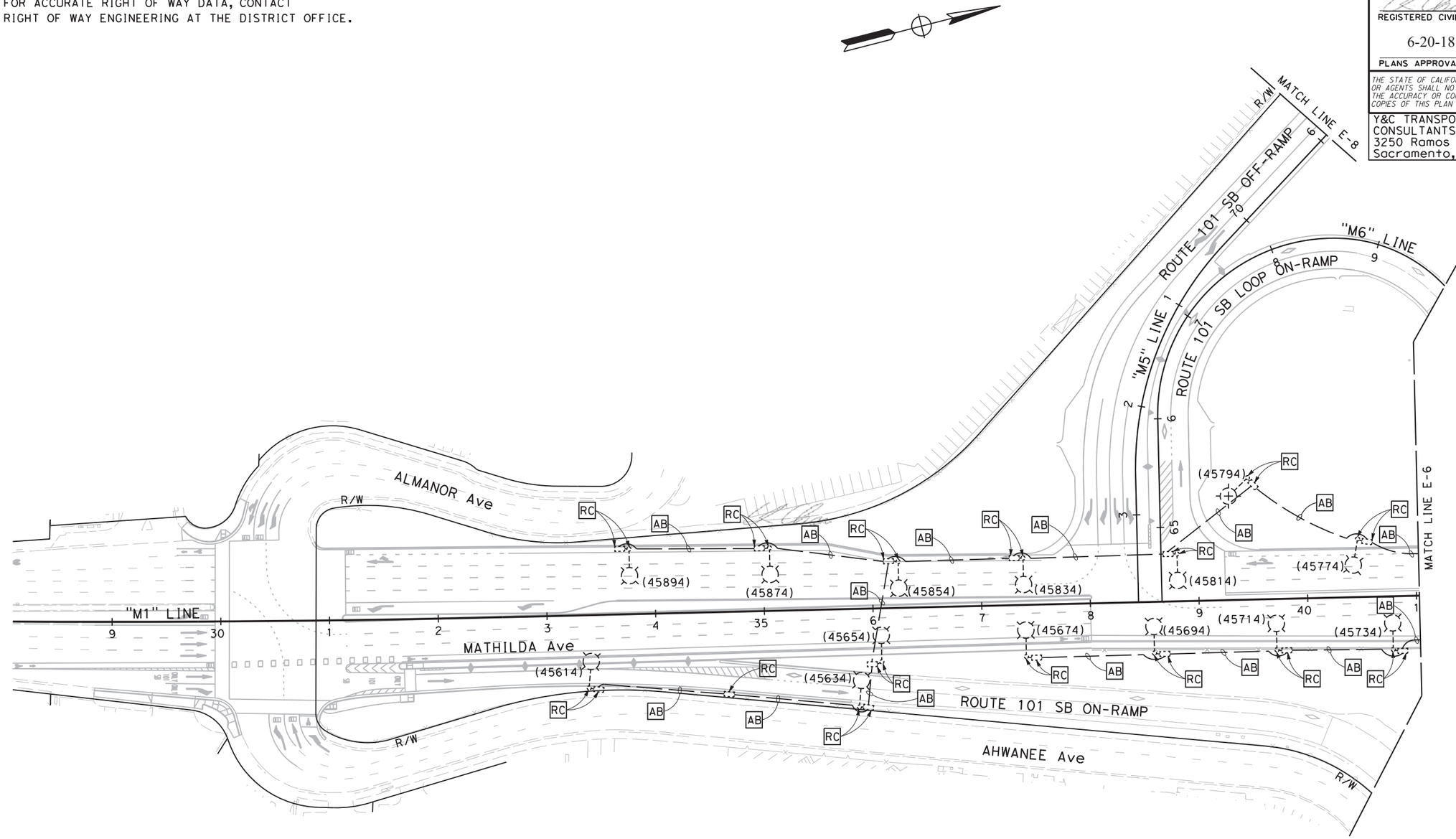

FOR NOTES, SYMBOLS, ABBREVIATIONS AND LEGEND, SEE SHEETS E-1 TO E-4

LIGHTING SYSTEM

APPROVED FOR ELECTRICAL WORK ONLY

MODIFYING EXISTING ELECTRICAL SYSTEM

SCALE: 1" = 50'

E-5

STATE OF CALIFORNIA - DEPARTMENT OF TRANSPORTATION
Caltrans

CONSULTANT FUNCTIONAL SUPERVISOR: TIMOTHY J. LEE
CALCULATED-DESIGNED BY: MENG YANG
CHECKED BY: DAN YAU
REVISED BY
DATE REVISED

LAST REVISION 00-00-00
DATE PLOTTED => $DATE
TIME PLOTTED => $TIME

Dist	COUNTY	ROUTE	POST MILES TOTAL PROJECT	SHEET No.	TOTAL SHEETS
04	SCL	101,237	45.2/45.8, 2.7/3.3	387	736

6-13-18
REGISTERED CIVIL ENGINEER — DATE

6-20-18
PLANS APPROVAL DATE

REGISTERED PROFESSIONAL ENGINEER — KIN Y. CHAN No. 55391 Exp. 12/31/18 CIVIL — STATE OF CALIFORNIA

THE STATE OF CALIFORNIA OR ITS OFFICERS OR AGENTS SHALL NOT BE RESPONSIBLE FOR THE ACCURACY OR COMPLETENESS OF SCANNED COPIES OF THIS PLAN SHEET.

Y&C TRANSPORTATION CONSULTANTS, INC.
3250 Ramos Circle
Sacramento, CA 95827

VTA
3331 N First St
Building B
San Jose, CA 95134

NOTE:

FOR ACCURATE RIGHT OF WAY DATA, CONTACT RIGHT OF WAY ENGINEERING AT THE DISTRICT OFFICE.

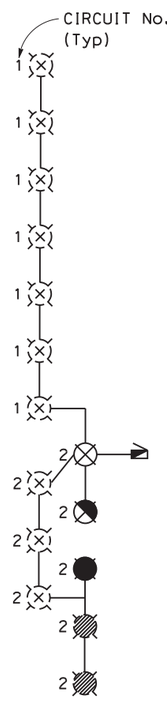

CIRCUIT DIAGRAM
CTID No. 04371010045664

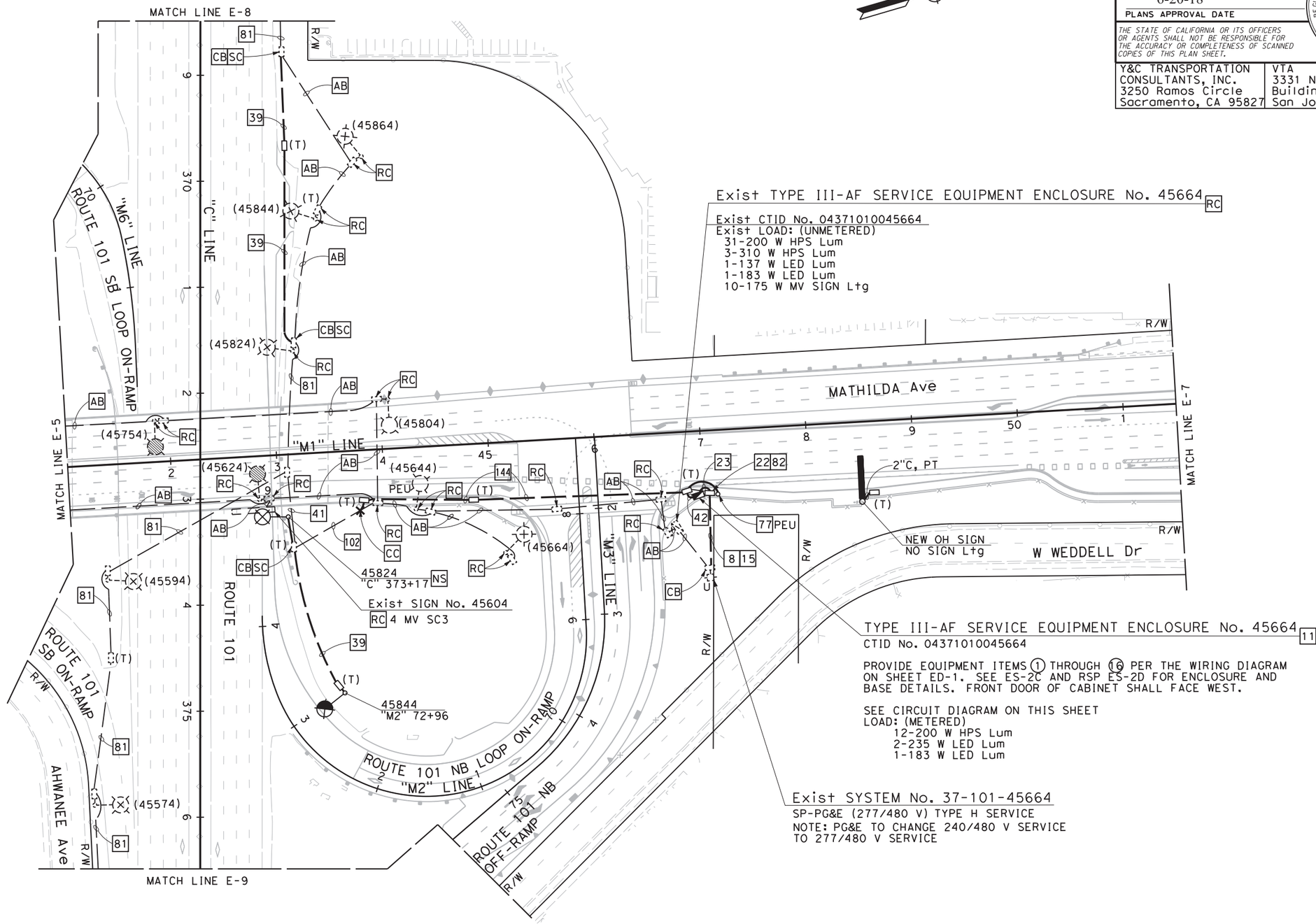

Exist TYPE III-AF SERVICE EQUIPMENT ENCLOSURE No. 45664 RC

Exist CTID No. 04371010045664
Exist LOAD: (UNMETERED)
31-200 W HPS Lum
3-310 W HPS Lum
1-137 W LED Lum
1-183 W LED Lum
10-175 W MV SIGN Ltg

TYPE III-AF SERVICE EQUIPMENT ENCLOSURE No. 45664 11
CTID No. 04371010045664

PROVIDE EQUIPMENT ITEMS (1) THROUGH (16) PER THE WIRING DIAGRAM ON SHEET ED-1. SEE ES-2C AND RSP ES-2D FOR ENCLOSURE AND BASE DETAILS. FRONT DOOR OF CABINET SHALL FACE WEST.

SEE CIRCUIT DIAGRAM ON THIS SHEET
LOAD: (METERED)
12-200 W HPS Lum
2-235 W LED Lum
1-183 W LED Lum

Exist SYSTEM No. 37-101-45664
SP-PG&E (277/480 V) TYPE H SERVICE
NOTE: PG&E TO CHANGE 240/480 V SERVICE TO 277/480 V SERVICE

FOR NOTES, SYMBOLS, ABBREVIATIONS AND LEGEND, SEE SHEETS E-1 TO E-4

LIGHTING SYSTEM

APPROVED FOR ELECTRICAL WORK ONLY

MODIFYING EXISTING ELECTRICAL SYSTEM

SCALE: 1" = 50'

E-6

CALCULATED-DESIGNED BY: MENG YANG
CHECKED BY: DAN YAU
CONSULTANT FUNCTIONAL SUPERVISOR: TIMOTHY J. LEE
STATE OF CALIFORNIA - DEPARTMENT OF TRANSPORTATION
Caltrans

REVISED BY | DATE REVISED

LAST REVISION 00-00-00 | DATE PLOTTED => $DATE | TIME PLOTTED => $TIME

NOTE:

FOR ACCURATE RIGHT OF WAY DATA, CONTACT
RIGHT OF WAY ENGINEERING AT THE DISTRICT OFFICE.

Dist	COUNTY	ROUTE	POST MILES TOTAL PROJECT	SHEET No.	TOTAL SHEETS
04	SCL	101,237	45.2/45.8, 2.7/3.3	388	736

6-13-18
REGISTERED CIVIL ENGINEER — DATE

6-20-18
PLANS APPROVAL DATE

REGISTERED PROFESSIONAL ENGINEER
KIN Y. CHAN
No. 55391
Exp. 12/31/18
CIVIL
STATE OF CALIFORNIA

THE STATE OF CALIFORNIA OR ITS OFFICERS OR AGENTS SHALL NOT BE RESPONSIBLE FOR THE ACCURACY OR COMPLETENESS OF SCANNED COPIES OF THIS PLAN SHEET.

Y&C TRANSPORTATION CONSULTANTS, INC.
3250 Ramos Circle
Sacramento, CA 95827

VTA
3331 N First St
Building B
San Jose, CA 95134

Exist TYPE III-AF SERVICE EQUIPMENT ENCLOSURE No. 03124

Exist CTID No. 04372370003214
Exist LOAD: (METERED)
3-200 W HPS Lum
500 W RM
200 W Irr

Exist SYSTEM No. 37-237-03124
SP-PG&E (120/240 V) UNDERGROUND SERVICE

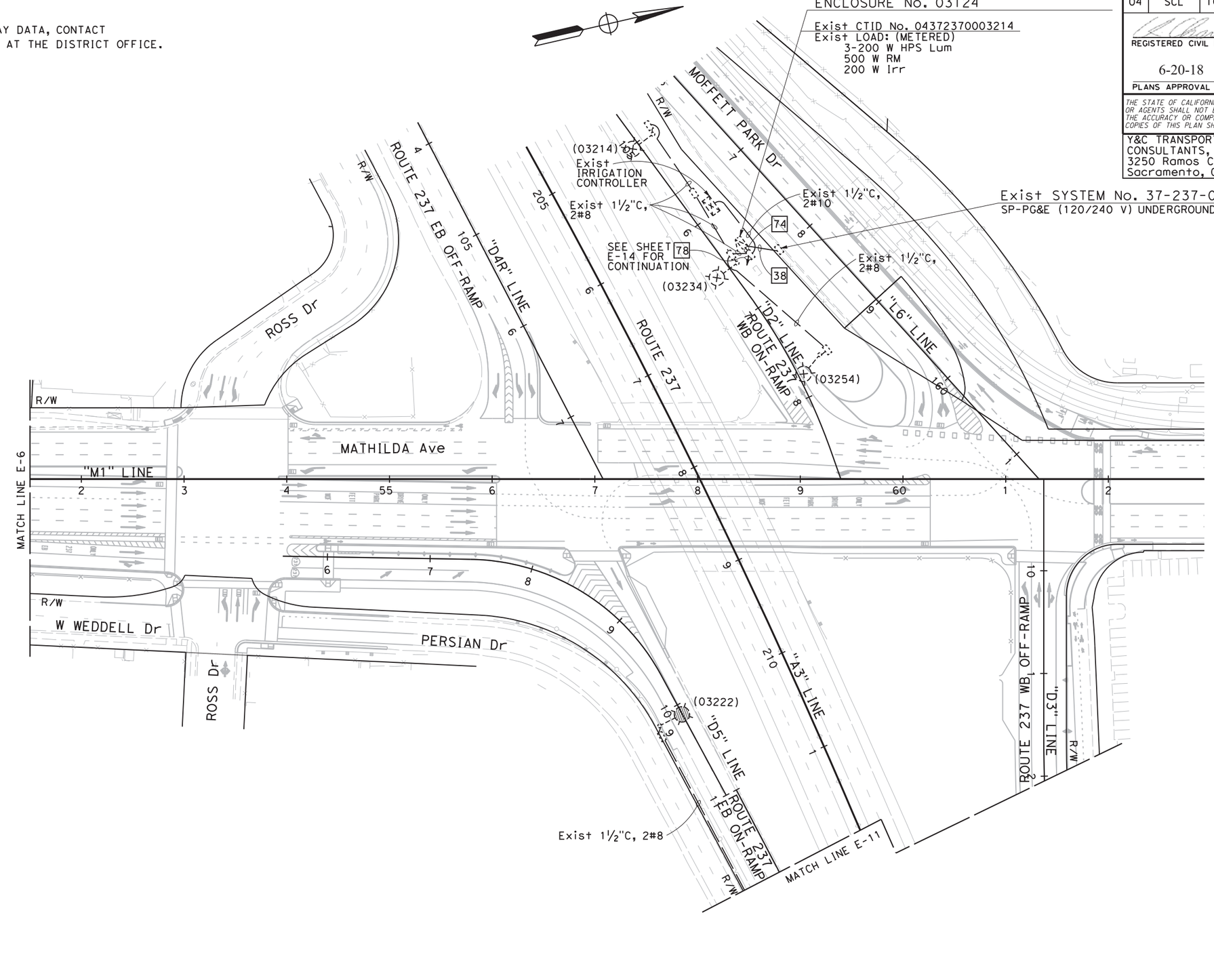

FOR NOTES, SYMBOLS, ABBREVIATIONS AND LEGEND, SEE SHEETS E-1 TO E-4

LIGHTING SYSTEM

APPROVED FOR ELECTRICAL WORK ONLY

MODIFYING EXISTING ELECTRICAL SYSTEM

SCALE: 1" = 50'

E-7

MENG YANG — REVISED BY
DAN YAU — DATE REVISED
CALCULATED-DESIGNED BY
CHECKED BY
TIMOTHY J. LEE — CONSULTANT FUNCTIONAL SUPERVISOR

STATE OF CALIFORNIA - DEPARTMENT OF TRANSPORTATION
Caltrans

LAST REVISION: 00-00-00
DATE PLOTTED => $DATE
TIME PLOTTED => $TIME

BORDER LAST REVISED 7/2/2010
USERNAME => $USER
DGN FILE => $REQUEST
RELATIVE BORDER SCALE IS IN INCHES 0 1 2 3
UNIT 0712
PROJECT NUMBER & PHASE 0413000204

NOTE:

FOR ACCURATE RIGHT OF WAY DATA, CONTACT
RIGHT OF WAY ENGINEERING AT THE DISTRICT OFFICE.

Dist	COUNTY	ROUTE	POST MILES TOTAL PROJECT	SHEET No.	TOTAL SHEETS
04	SCL	101,237	45.2/45.8, 2.7/3.3	389	736

6-13-18
REGISTERED CIVIL ENGINEER DATE

KIN Y. CHAN
No. 55391
Exp. 12/31/18
CIVIL
REGISTERED PROFESSIONAL ENGINEER
STATE OF CALIFORNIA

6-20-18
PLANS APPROVAL DATE

THE STATE OF CALIFORNIA OR ITS OFFICERS OR AGENTS SHALL NOT BE RESPONSIBLE FOR THE ACCURACY OR COMPLETENESS OF SCANNED COPIES OF THIS PLAN SHEET.

Y&C TRANSPORTATION CONSULTANTS, INC.
3250 Ramos Circle
Sacramento, CA 95827

VTA
3331 N First St
Building B
San Jose, CA 95134

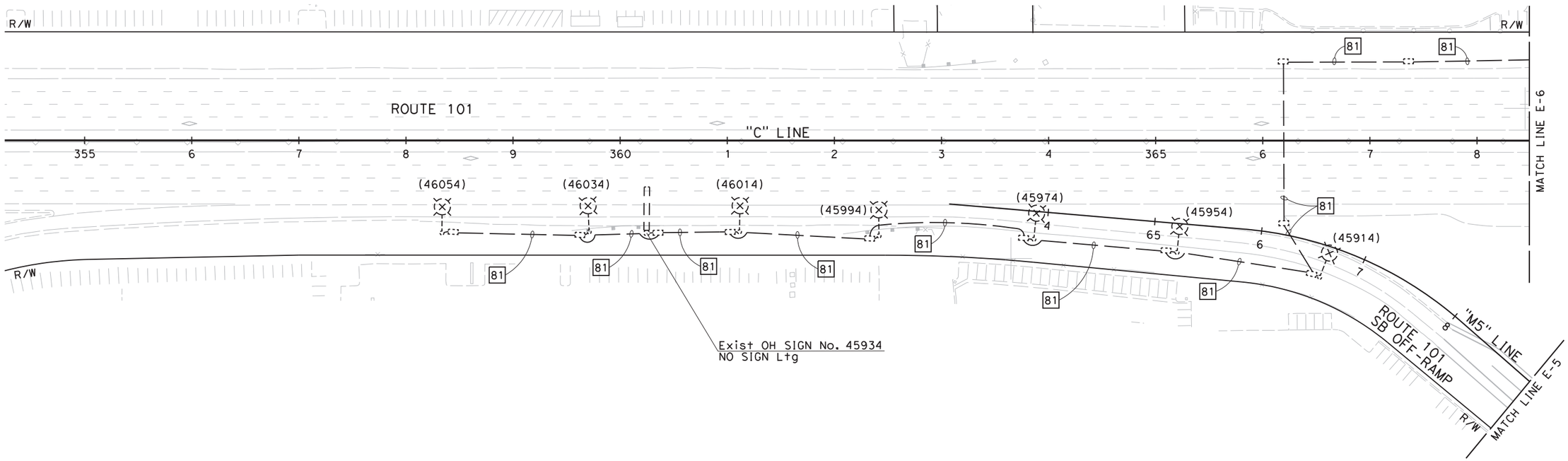

FOR NOTES, SYMBOLS, ABBREVIATIONS AND LEGEND, SEE SHEETS E-1 TO E-4

LIGHTING SYSTEM

APPROVED FOR ELECTRICAL WORK ONLY

MODIFYING EXISTING ELECTRICAL SYSTEM

SCALE: 1" = 50'

E-8

STATE OF CALIFORNIA - DEPARTMENT OF TRANSPORTATION
Caltrans
CONSULTANT FUNCTIONAL SUPERVISOR: TIMOTHY J. LEE
CALCULATED-DESIGNED BY: MENG YANG
CHECKED BY: DAN YAU
REVISED BY
DATE REVISED
LAST REVISION 00-00-00
DATE PLOTTED => $DATE
TIME PLOTTED => $TIME

BORDER LAST REVISED 7/2/2010
USERNAME => $USER
DGN FILE => $REQUEST
RELATIVE BORDER SCALE IS IN INCHES 0 1 2 3
UNIT 0712
PROJECT NUMBER & PHASE 0413000204

Dist	COUNTY	ROUTE	POST MILES TOTAL PROJECT	SHEET No.	TOTAL SHEETS
04	SCL	101,237	45.2/45.8, 2.7/3.3	390	736

6-13-18
REGISTERED CIVIL ENGINEER — DATE

KIN Y. CHAN
No. 55391
Exp. 12/31/18
CIVIL
REGISTERED PROFESSIONAL ENGINEER
STATE OF CALIFORNIA

6-20-18
PLANS APPROVAL DATE

THE STATE OF CALIFORNIA OR ITS OFFICERS OR AGENTS SHALL NOT BE RESPONSIBLE FOR THE ACCURACY OR COMPLETENESS OF SCANNED COPIES OF THIS PLAN SHEET.

Y&C TRANSPORTATION CONSULTANTS, INC.
3250 Ramos Circle
Sacramento, CA 95827

VTA
3331 N First St
Building B
San Jose, CA 95134

NOTE:

FOR ACCURATE RIGHT OF WAY DATA, CONTACT RIGHT OF WAY ENGINEERING AT THE DISTRICT OFFICE.

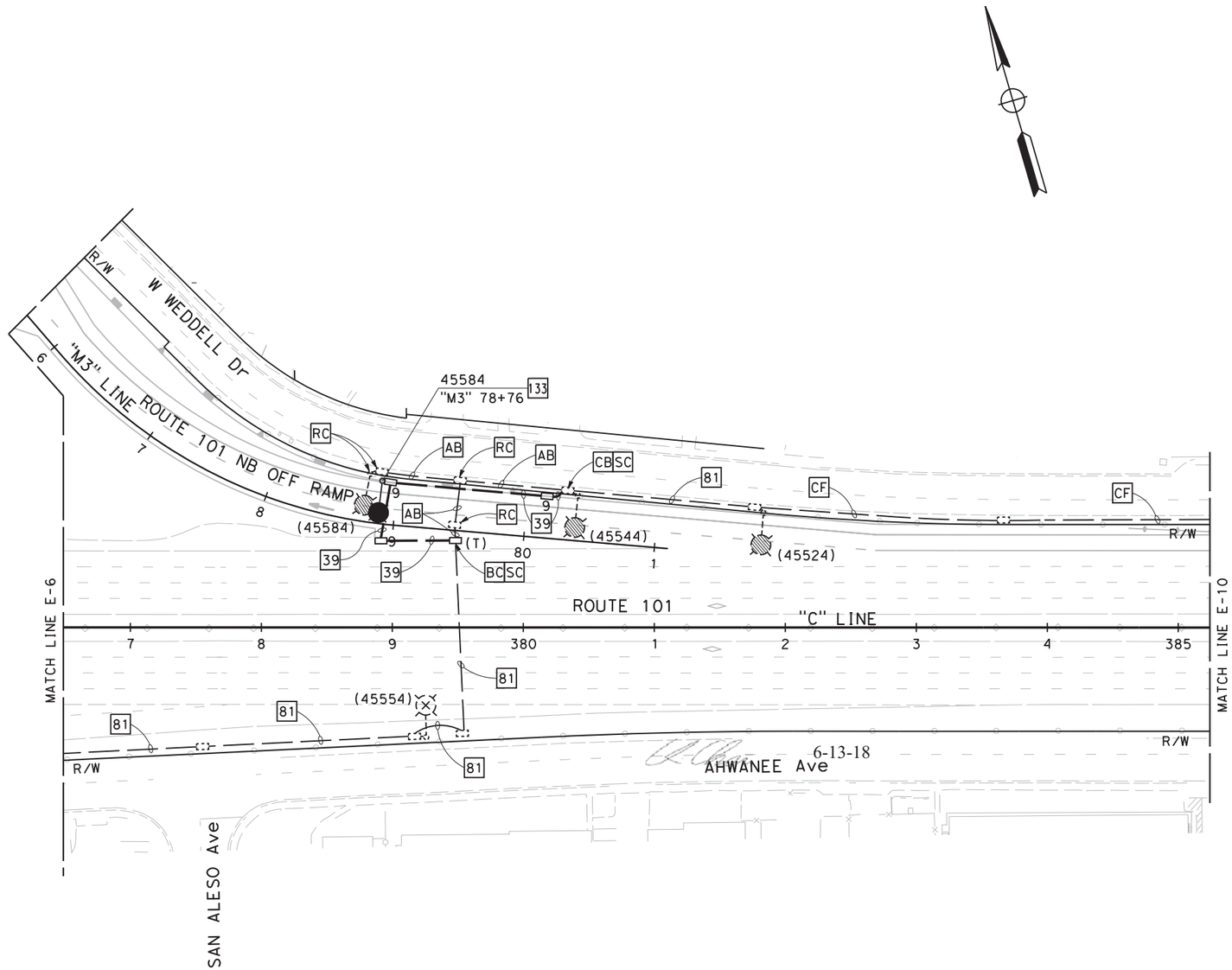

FOR NOTES, SYMBOLS, ABBREVIATIONS AND LEGEND, SEE SHEETS E-1 TO E-4

LIGHTING SYSTEM

APPROVED FOR ELECTRICAL WORK ONLY

MODIFYING EXISTING ELECTRICAL SYSTEM

SCALE: 1" = 50'

E-9

REVISED BY	MENG YANG
DATE REVISED	DAN YAU
CALCULATED-DESIGNED BY	
CHECKED BY	
CONSULTANT FUNCTIONAL SUPERVISOR	TIMOTHY J. LEE
STATE OF CALIFORNIA - DEPARTMENT OF TRANSPORTATION	Caltrans

LAST REVISION 00-00-00 | DATE PLOTTED => $DATE | TIME PLOTTED => $TIME

BORDER LAST REVISED 7/2/2010 | USERNAME => $USER | DGN FILE => $REQUEST | RELATIVE BORDER SCALE IS IN INCHES 0 1 2 3 | UNIT 0712 | PROJECT NUMBER & PHASE 0413000204

Dist	COUNTY	ROUTE	POST MILES TOTAL PROJECT	SHEET No.	TOTAL SHEETS
04	SCL	101,237	45.2/45.8, 2.7/3.3	391	736

REGISTERED CIVIL ENGINEER 6-13-18 DATE

6-20-18
PLANS APPROVAL DATE

REGISTERED PROFESSIONAL ENGINEER KIN Y. CHAN No. 55391 Exp. 12/31/18 CIVIL STATE OF CALIFORNIA

THE STATE OF CALIFORNIA OR ITS OFFICERS OR AGENTS SHALL NOT BE RESPONSIBLE FOR THE ACCURACY OR COMPLETENESS OF SCANNED COPIES OF THIS PLAN SHEET.

Y&C TRANSPORTATION CONSULTANTS, INC.
3250 Ramos Circle
Sacramento, CA 95827

VTA
3331 N First St
Building B
San Jose, CA 95134

NOTE:
FOR ACCURATE RIGHT OF WAY DATA, CONTACT RIGHT OF WAY ENGINEERING AT THE DISTRICT OFFICE.

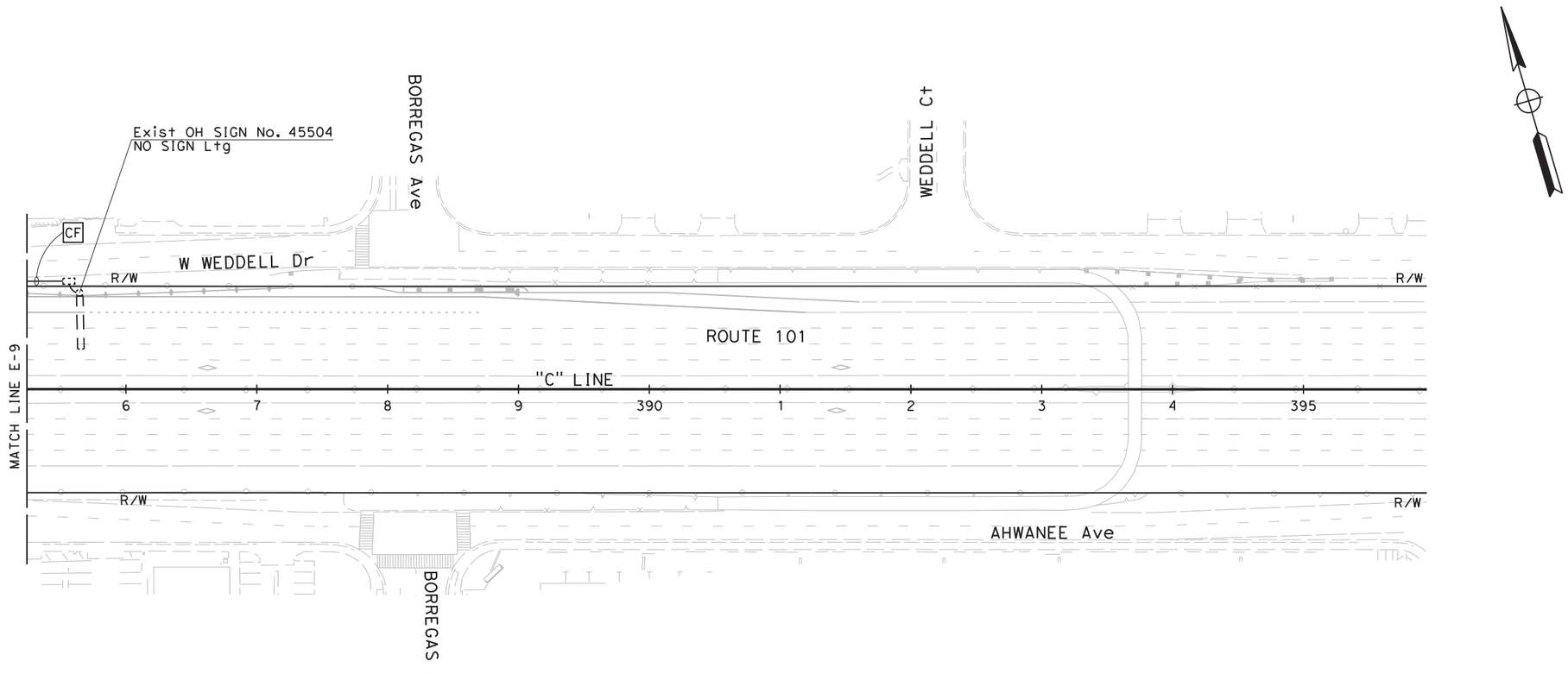

FOR NOTES, SYMBOLS, ABBREVIATIONS AND LEGEND, SEE SHEETS E-1 TO E-4

LIGHTING SYSTEM

APPROVED FOR ELECTRICAL WORK ONLY

MODIFYING EXISTING ELECTRICAL SYSTEM

SCALE: 1" = 50'

E-10

STATE OF CALIFORNIA - DEPARTMENT OF TRANSPORTATION
Caltrans

CONSULTANT FUNCTIONAL SUPERVISOR: TIMOTHY J. LEE
CALCULATED-DESIGNED BY: MENG YANG
CHECKED BY: DAN YAU
REVISED BY
DATE REVISED

LAST REVISION 00-00-00
DATE PLOTTED => $DATE
TIME PLOTTED => $TIME

BORDER LAST REVISED 7/2/2010
USERNAME => $USER
DGN FILE => $REQUEST
RELATIVE BORDER SCALE IS IN INCHES 0 1 2 3
UNIT 0712
PROJECT NUMBER & PHASE 0413000204

NOTE:

FOR ACCURATE RIGHT OF WAY DATA, CONTACT
RIGHT OF WAY ENGINEERING AT THE DISTRICT OFFICE.

Dist	COUNTY	ROUTE	POST MILES TOTAL PROJECT	SHEET No.	TOTAL SHEETS
04	SCL	101,237	45.2/45.8, 2.7/3.3	392	736

6-13-18
REGISTERED CIVIL ENGINEER — DATE

REGISTERED PROFESSIONAL ENGINEER
KIN Y. CHAN
No. 55391
Exp. 12/31/18
CIVIL
STATE OF CALIFORNIA

6-20-18
PLANS APPROVAL DATE

THE STATE OF CALIFORNIA OR ITS OFFICERS OR AGENTS SHALL NOT BE RESPONSIBLE FOR THE ACCURACY OR COMPLETENESS OF SCANNED COPIES OF THIS PLAN SHEET.

Y&C TRANSPORTATION CONSULTANTS, INC.
3250 Ramos Circle
Sacramento, CA 95827

VTA
3331 N First St
Building B
San Jose, CA 95134

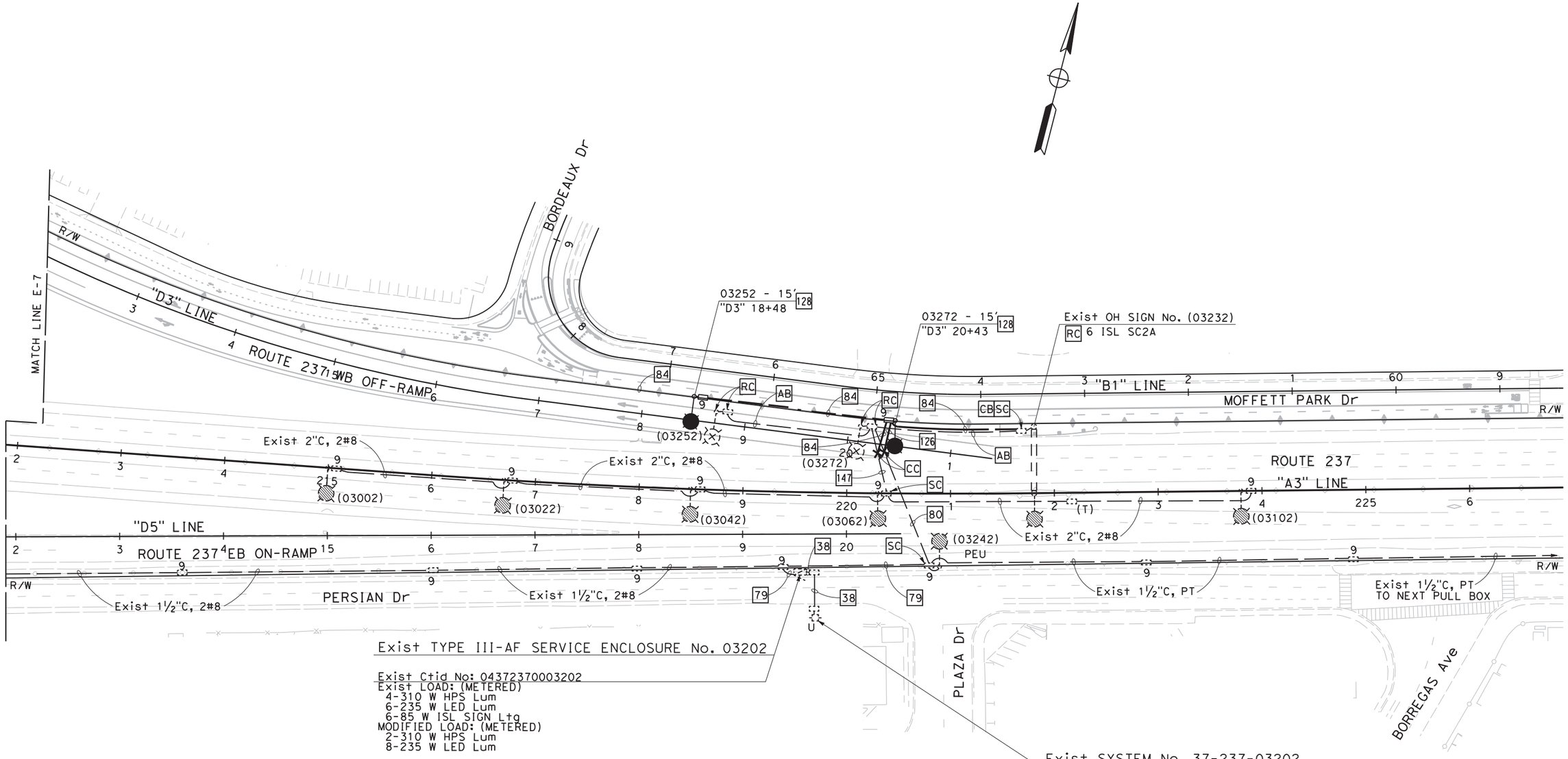

FOR NOTES, SYMBOLS, ABBREVIATIONS AND LEGEND, SEE SHEETS E-1 TO E-4

LIGHTING SYSTEM

APPROVED FOR ELECTRICAL WORK ONLY

MODIFYING EXISTING ELECTRICAL SYSTEM

SCALE: 1" = 50'

E-11

MENG YANG — CALCULATED-DESIGNED BY
DAN YAU — CHECKED BY
REVISED BY — DATE REVISED
CONSULTANT FUNCTIONAL SUPERVISOR — TIMOTHY J. LEE
STATE OF CALIFORNIA - DEPARTMENT OF TRANSPORTATION — Caltrans

DATE PLOTTED => $DATE
TIME PLOTTED => $TIME
LAST REVISION 00-00-00

BORDER LAST REVISED 7/2/2010
USERNAME => $USER
DGN FILE => $REQUEST
RELATIVE BORDER SCALE IS IN INCHES 0 1 2 3
UNIT 0712
PROJECT NUMBER & PHASE 0413000204

NOTE:

FOR ACCURATE RIGHT OF WAY DATA, CONTACT
RIGHT OF WAY ENGINEERING AT THE DISTRICT OFFICE.

Dist	COUNTY	ROUTE	POST MILES TOTAL PROJECT	SHEET No.	TOTAL SHEETS
04	SCL	101,237	45.2/45.8, 2.7/3.3	393	736

6-13-18
REGISTERED CIVIL ENGINEER DATE

KIN Y. CHAN
No. 55391
Exp. 12/31/18
CIVIL
REGISTERED PROFESSIONAL ENGINEER
STATE OF CALIFORNIA

6-20-18
PLANS APPROVAL DATE

THE STATE OF CALIFORNIA OR ITS OFFICERS OR AGENTS SHALL NOT BE RESPONSIBLE FOR THE ACCURACY OR COMPLETENESS OF SCANNED COPIES OF THIS PLAN SHEET.

Y&C TRANSPORTATION CONSULTANTS, INC.
3250 Ramos Circle
Sacramento, CA 95827

VTA
3331 N First St
Building B
San Jose, CA 95134

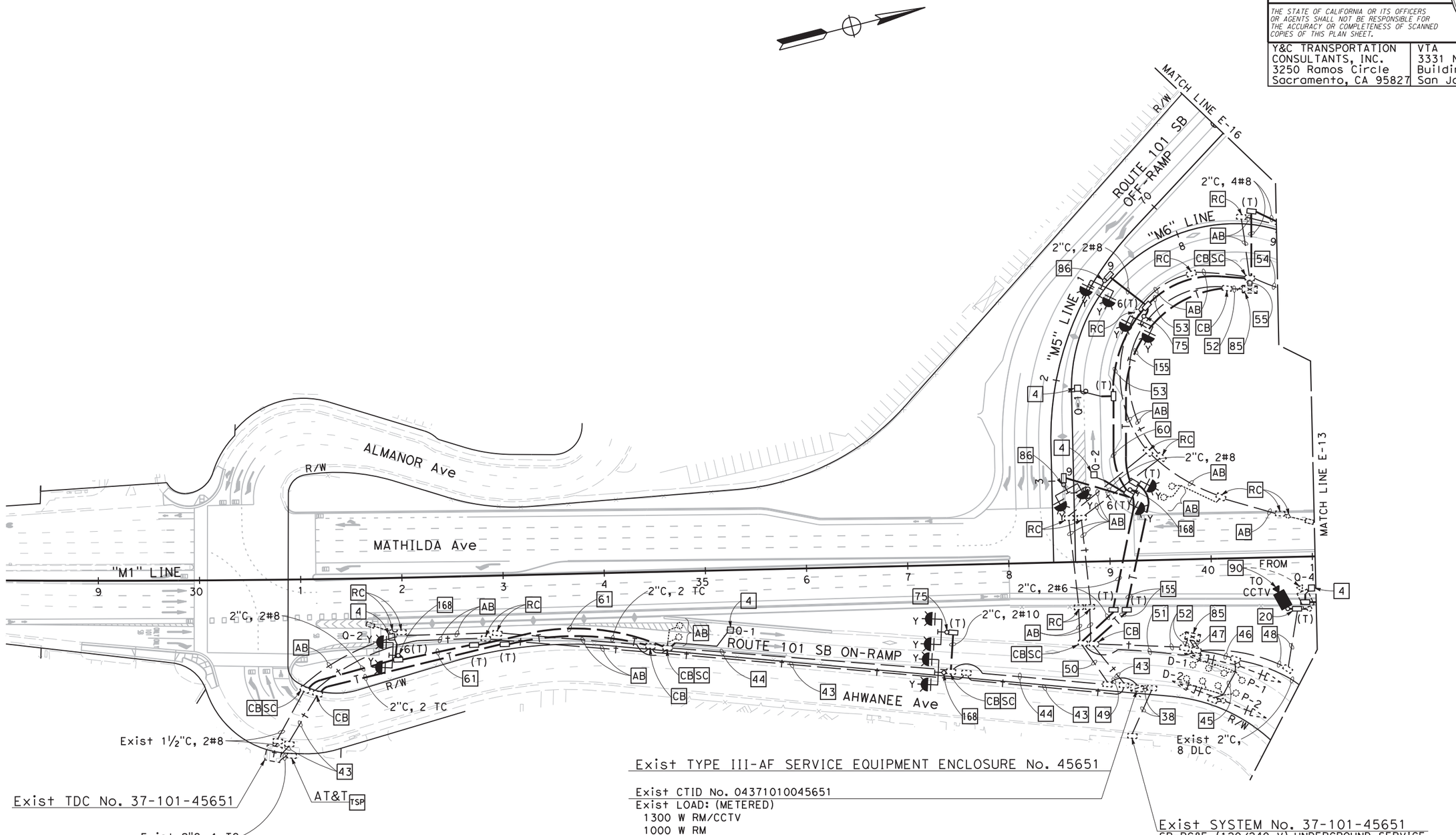

Exist TYPE III-AF SERVICE EQUIPMENT ENCLOSURE No. 45651

Exist CTID No. 04371010045651
Exist LOAD: (METERED)
1300 W RM/CCTV
1000 W RM
100 W TDC

Exist SYSTEM No. 37-101-45651
SP-PG&E (120/240 V) UNDERGROUND SERVICE

FOR NOTES, SYMBOLS, ABBREVIATIONS AND LEGEND, SEE SHEETS E-1 TO E-4

RAMP METERING SYSTEM

APPROVED FOR ELECTRICAL WORK ONLY

MODIFYING EXISTING ELECTRICAL SYSTEM

SCALE: 1" = 50'

E-12

STATE OF CALIFORNIA - DEPARTMENT OF TRANSPORTATION
Caltrans
CONSULTANT FUNCTIONAL SUPERVISOR: TIMOTHY J.LEE
CALCULATED-DESIGNED BY: MENG YANG
CHECKED BY: DAN YAU
REVISED BY
DATE REVISED

LAST REVISION 00-00-00
DATE PLOTTED => $DATE
TIME PLOTTED => $TIME

BORDER LAST REVISED 7/2/2010
USERNAME => $USER
DGN FILE => $REQUEST
RELATIVE BORDER SCALE IS IN INCHES 0 1 2 3
UNIT 0712
PROJECT NUMBER & PHASE 0413000204

Dist	COUNTY	ROUTE	POST MILES TOTAL PROJECT	SHEET No.	TOTAL SHEETS
04	SCL	101,237	45.2/45.8, 2.7/3.3	394	736

REGISTERED CIVIL ENGINEER 6-13-18 DATE

6-20-18
PLANS APPROVAL DATE

REGISTERED PROFESSIONAL ENGINEER KIN Y. CHAN No. 55391 Exp. 12/31/18 CIVIL STATE OF CALIFORNIA

THE STATE OF CALIFORNIA OR ITS OFFICERS OR AGENTS SHALL NOT BE RESPONSIBLE FOR THE ACCURACY OR COMPLETENESS OF SCANNED COPIES OF THIS PLAN SHEET.

Y&C TRANSPORTATION CONSULTANTS, INC.
3250 Ramos Circle
Sacramento, CA 95827

VTA
3331 N First St
Building B
San Jose, CA 95134

NOTE:
FOR ACCURATE RIGHT OF WAY DATA, CONTACT RIGHT OF WAY ENGINEERING AT THE DISTRICT OFFICE.

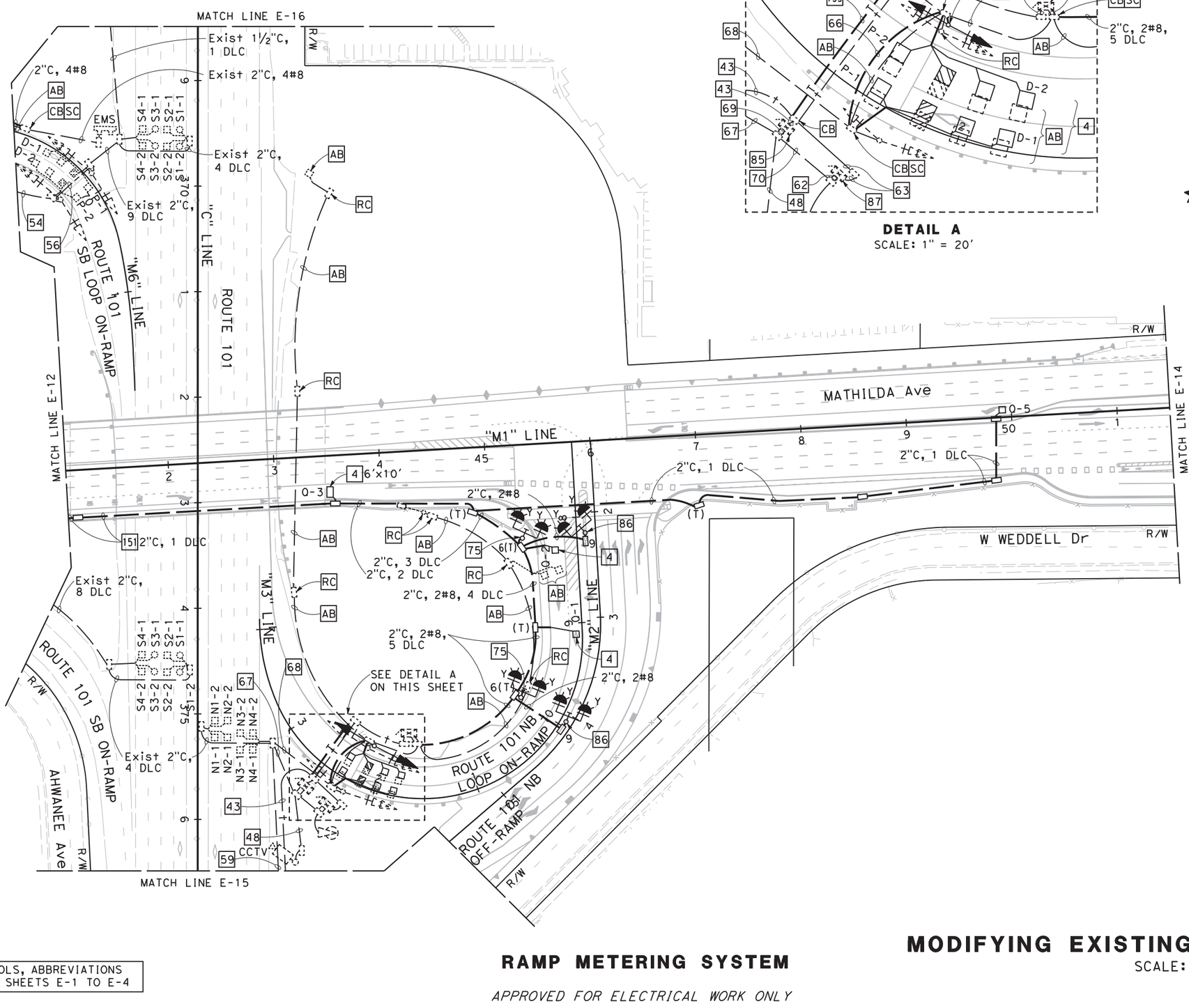

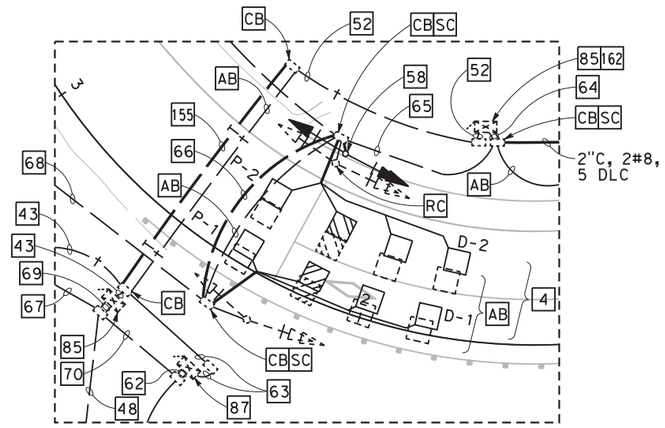

DETAIL A
SCALE: 1" = 20'

FOR NOTES, SYMBOLS, ABBREVIATIONS AND LEGEND, SEE SHEETS E-1 TO E-4

RAMP METERING SYSTEM

APPROVED FOR ELECTRICAL WORK ONLY

MODIFYING EXISTING ELECTRICAL SYSTEM

SCALE: 1" = 50'

E-13

STATE OF CALIFORNIA - DEPARTMENT OF TRANSPORTATION
Caltrans

CONSULTANT FUNCTIONAL SUPERVISOR: TIMOTHY J. LEE
CALCULATED-DESIGNED BY: MENG YANG
CHECKED BY: DAN YAU
REVISED BY
DATE REVISED

LAST REVISION 00-00-00
DATE PLOTTED => $DATE
TIME PLOTTED => $TIME

BORDER LAST REVISED 7/2/2010
USERNAME => $USER
DGN FILE => $REQUEST
RELATIVE BORDER SCALE IS IN INCHES 0 1 2 3
UNIT 0712
PROJECT NUMBER & PHASE 0413000204

NOTE:

FOR ACCURATE RIGHT OF WAY DATA, CONTACT
RIGHT OF WAY ENGINEERING AT THE DISTRICT OFFICE.

Dist	COUNTY	ROUTE	POST MILES TOTAL PROJECT	SHEET No.	TOTAL SHEETS
04	SCL	101,237	45.2/45.8, 2.7/3.3	395	736

REGISTERED CIVIL ENGINEER — DATE: 6-13-18

PLANS APPROVAL DATE: 6-20-18

REGISTERED PROFESSIONAL ENGINEER — KIN Y. CHAN, No. 55391, Exp. 12/31/18, CIVIL, STATE OF CALIFORNIA

THE STATE OF CALIFORNIA OR ITS OFFICERS OR AGENTS SHALL NOT BE RESPONSIBLE FOR THE ACCURACY OR COMPLETENESS OF SCANNED COPIES OF THIS PLAN SHEET.

Y&C TRANSPORTATION CONSULTANTS, INC.
3250 Ramos Circle
Sacramento, CA 95827

VTA
3331 N First St
Building B
San Jose, CA 95134

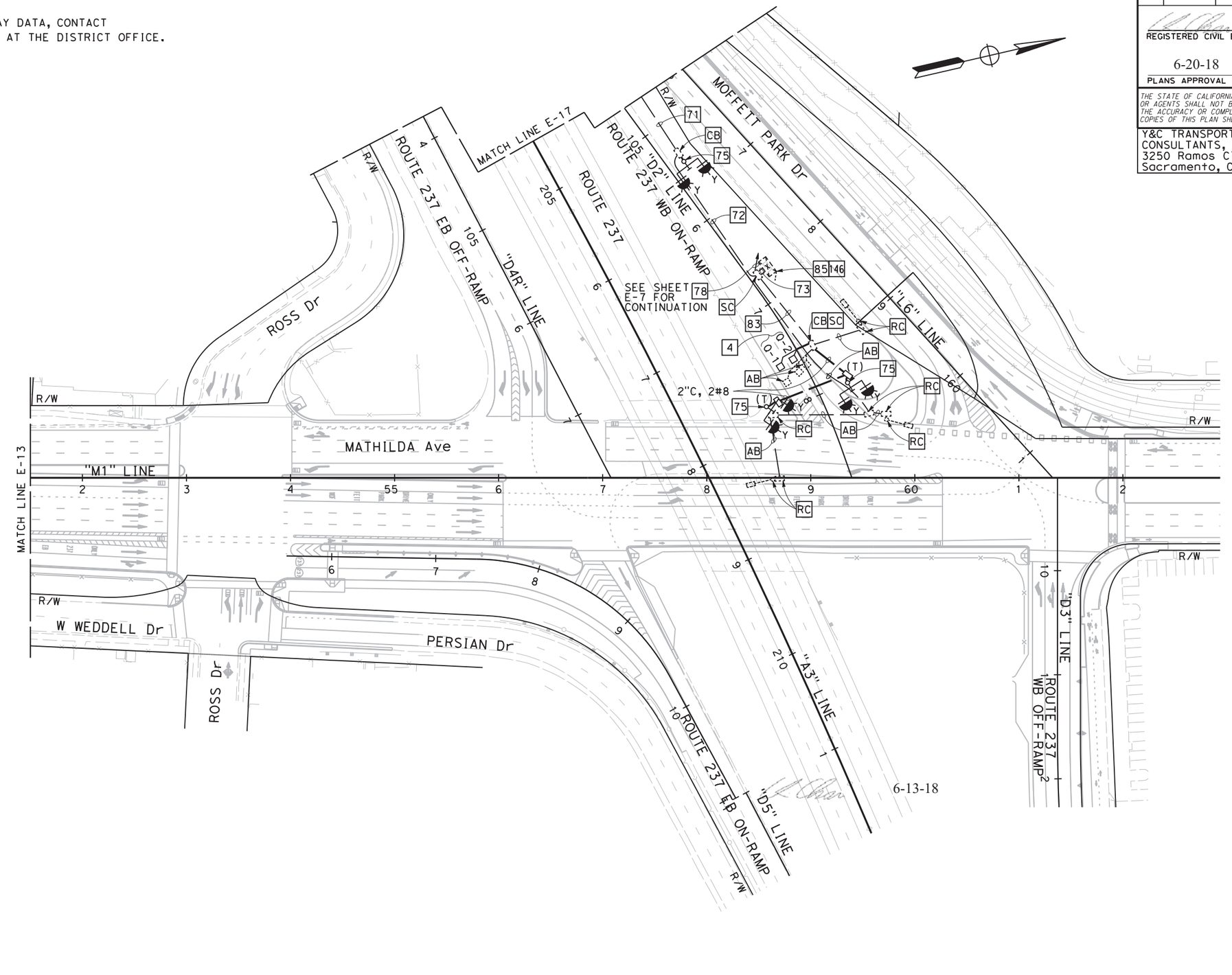

FOR NOTES, SYMBOLS, ABBREVIATIONS AND LEGEND, SEE SHEETS E-1 TO E-4

RAMP METERING SYSTEM

APPROVED FOR ELECTRICAL WORK ONLY

MODIFYING EXISTING ELECTRICAL SYSTEM

SCALE: 1" = 50'

E-14

MENG YANG — REVISED BY
DAN YAU — DATE REVISED
CALCULATED-DESIGNED BY
CHECKED BY
TIMOTHY J. LEE — CONSULTANT FUNCTIONAL SUPERVISOR
STATE OF CALIFORNIA - DEPARTMENT OF TRANSPORTATION — Caltrans®

LAST REVISION 00-00-00 — DATE PLOTTED => $DATE — TIME PLOTTED => $TIME

BORDER LAST REVISED 7/2/2010 | USERNAME => $USER | DGN FILE => $REQUEST | RELATIVE BORDER SCALE IS IN INCHES 0 1 2 3 | UNIT 0712 | PROJECT NUMBER & PHASE 0413000204

NOTE:

FOR ACCURATE RIGHT OF WAY DATA, CONTACT
RIGHT OF WAY ENGINEERING AT THE DISTRICT OFFICE.

Dist	COUNTY	ROUTE	POST MILES TOTAL PROJECT	SHEET No.	TOTAL SHEETS
04	SCL	101,237	45.2/45.8, 2.7/3.3	396	736

6-13-18
REGISTERED CIVIL ENGINEER — DATE

KIN Y. CHAN
No. 55391
Exp. 12/31/18
CIVIL
REGISTERED PROFESSIONAL ENGINEER
STATE OF CALIFORNIA

6-20-18
PLANS APPROVAL DATE

THE STATE OF CALIFORNIA OR ITS OFFICERS OR AGENTS SHALL NOT BE RESPONSIBLE FOR THE ACCURACY OR COMPLETENESS OF SCANNED COPIES OF THIS PLAN SHEET.

Y&C TRANSPORTATION CONSULTANTS, INC.
3250 Ramos Circle
Sacramento, CA 95827

VTA
3331 N First St
Building B
San Jose, CA 95134

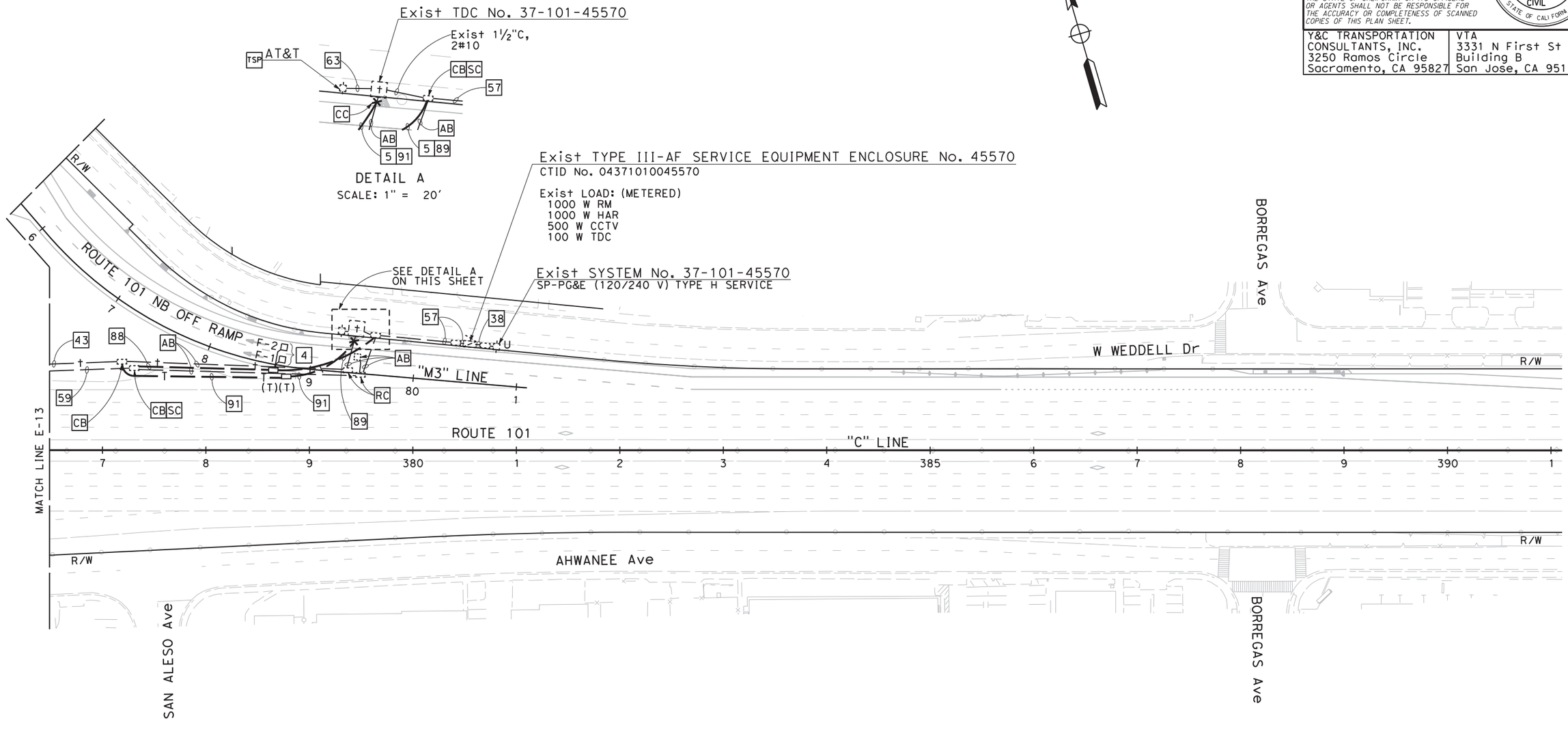

FOR NOTES, SYMBOLS, ABBREVIATIONS AND LEGEND, SEE SHEETS E-1 TO E-4

RAMP METERING SYSTEM

APPROVED FOR ELECTRICAL WORK ONLY

MODIFYING EXISTING ELECTRICAL SYSTEM

SCALE: 1" = 50'

E-15

REVISED BY | DATE REVISED
MENG YANG | DAN YAU
CALCULATED-DESIGNED BY | CHECKED BY
CONSULTANT FUNCTIONAL SUPERVISOR: TIMOTHY J. LEE
STATE OF CALIFORNIA - DEPARTMENT OF TRANSPORTATION
Caltrans

LAST REVISION 00-00-00
DATE PLOTTED => $DATE
TIME PLOTTED => $TIME

BORDER LAST REVISED 7/2/2010
USERNAME => $USER
DGN FILE => $REQUEST
RELATIVE BORDER SCALE IS IN INCHES 0 1 2 3
UNIT 0712
PROJECT NUMBER & PHASE 0413000204

NOTE:

FOR ACCURATE RIGHT OF WAY DATA, CONTACT
RIGHT OF WAY ENGINEERING AT THE DISTRICT OFFICE.

Dist	COUNTY	ROUTE	POST MILES TOTAL PROJECT	SHEET No.	TOTAL SHEETS
04	SCL	101,237	45.2/45.8, 2.7/3.3	397	736

6-13-18
REGISTERED CIVIL ENGINEER — DATE

6-20-18
PLANS APPROVAL DATE

REGISTERED PROFESSIONAL ENGINEER
KIN Y. CHAN
No. 55391
Exp. 12/31/18
CIVIL
STATE OF CALIFORNIA

THE STATE OF CALIFORNIA OR ITS OFFICERS OR AGENTS SHALL NOT BE RESPONSIBLE FOR THE ACCURACY OR COMPLETENESS OF SCANNED COPIES OF THIS PLAN SHEET.

Y&C TRANSPORTATION CONSULTANTS, INC.
3250 Ramos Circle
Sacramento, CA 95827

VTA
3331 N First St
Building B
San Jose, CA 95134

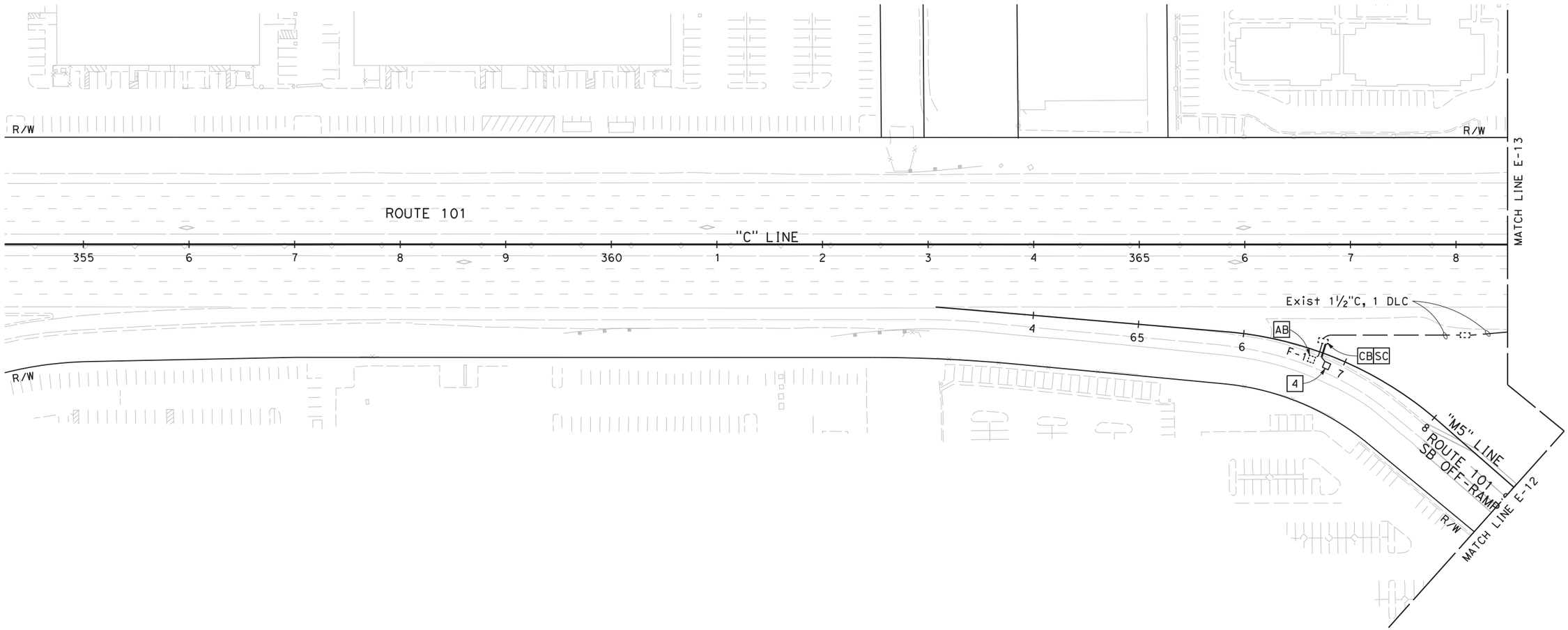

FOR NOTES, SYMBOLS, ABBREVIATIONS AND LEGEND, SEE SHEETS E-1 TO E-4

RAMP METERING SYSTEM

APPROVED FOR ELECTRICAL WORK ONLY

MODIFYING EXISTING ELECTRICAL SYSTEM

SCALE: 1" = 50'

E-16

MENG YANG — CALCULATED-DESIGNED BY
DAN YAU — CHECKED BY
TIMOTHY J. LEE — CONSULTANT FUNCTIONAL SUPERVISOR
REVISED BY
DATE REVISED
STATE OF CALIFORNIA - DEPARTMENT OF TRANSPORTATION
Caltrans

LAST REVISION 00-00-00
DATE PLOTTED => $DATE
TIME PLOTTED => $TIME

BORDER LAST REVISED 7/2/2010
USERNAME => $USER
DGN FILE => $REQUEST
RELATIVE BORDER SCALE IS IN INCHES 0 1 2 3
UNIT 0712
PROJECT NUMBER & PHASE 0413000204

Dist	COUNTY	ROUTE	POST MILES TOTAL PROJECT	SHEET No.	TOTAL SHEETS
04	SCL	101,237	45.2/45.8, 2.7/3.3	398	736

6-13-18
REGISTERED CIVIL ENGINEER — DATE

REGISTERED PROFESSIONAL ENGINEER
KIN Y. CHAN
No. 55391
Exp. 12/31/18
CIVIL
STATE OF CALIFORNIA

6-20-18
PLANS APPROVAL DATE

THE STATE OF CALIFORNIA OR ITS OFFICERS OR AGENTS SHALL NOT BE RESPONSIBLE FOR THE ACCURACY OR COMPLETENESS OF SCANNED COPIES OF THIS PLAN SHEET.

Y&C TRANSPORTATION CONSULTANTS, INC.
3250 Ramos Circle
Sacramento, CA 95827

VTA
3331 N First St
Building B
San Jose, CA 95134

NOTE:
FOR ACCURATE RIGHT OF WAY DATA, CONTACT RIGHT OF WAY ENGINEERING AT THE DISTRICT OFFICE.

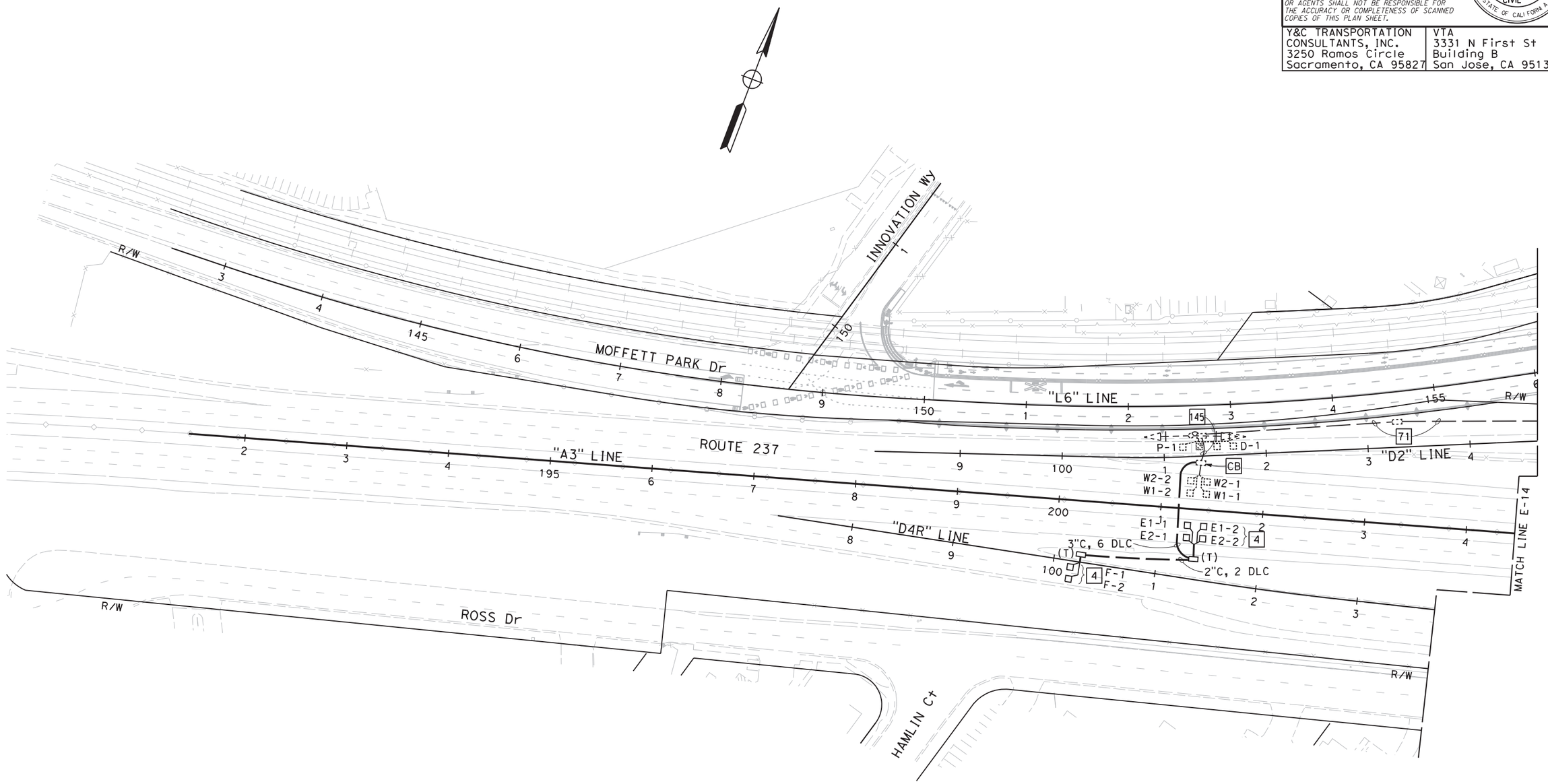

FOR NOTES, SYMBOLS, ABBREVIATIONS AND LEGEND, SEE SHEETS E-1 TO E-4

RAMP METERING SYSTEM

APPROVED FOR ELECTRICAL WORK ONLY

MODIFYING EXISTING ELECTRICAL SYSTEM

SCALE: 1" = 50'

E-17

MENG YANG — REVISED BY
DAN YAU — DATE REVISED
CALCULATED-DESIGNED BY
CHECKED BY
TIMOTHY J. LEE — CONSULTANT FUNCTIONAL SUPERVISOR
STATE OF CALIFORNIA - DEPARTMENT OF TRANSPORTATION
Caltrans

LAST REVISION 00-00-00
DATE PLOTTED => $DATE
TIME PLOTTED => $TIME

BORDER LAST REVISED 7/2/2010
USERNAME => $USER
DGN FILE => $REQUEST
RELATIVE BORDER SCALE IS IN INCHES 0 1 2 3
UNIT 0712
PROJECT NUMBER & PHASE 0413000204

NOTE:

FOR ACCURATE RIGHT OF WAY DATA, CONTACT
RIGHT OF WAY ENGINEERING AT THE DISTRICT OFFICE.

Dist	COUNTY	ROUTE	POST MILES TOTAL PROJECT	SHEET No.	TOTAL SHEETS
04	SCL	101,237	45.2/45.8, 2.7/3.3	399	736

6-13-18
REGISTERED CIVIL ENGINEER DATE

KIN Y. CHAN
No. 55391
Exp. 12/31/18
CIVIL
REGISTERED PROFESSIONAL ENGINEER
STATE OF CALIFORNIA

6-20-18
PLANS APPROVAL DATE

THE STATE OF CALIFORNIA OR ITS OFFICERS OR AGENTS SHALL NOT BE RESPONSIBLE FOR THE ACCURACY OR COMPLETENESS OF SCANNED COPIES OF THIS PLAN SHEET.

Y&C TRANSPORTATION CONSULTANTS, INC.
3250 Ramos Circle
Sacramento, CA 95827

VTA
3331 N First St
Building B
San Jose, CA 95134

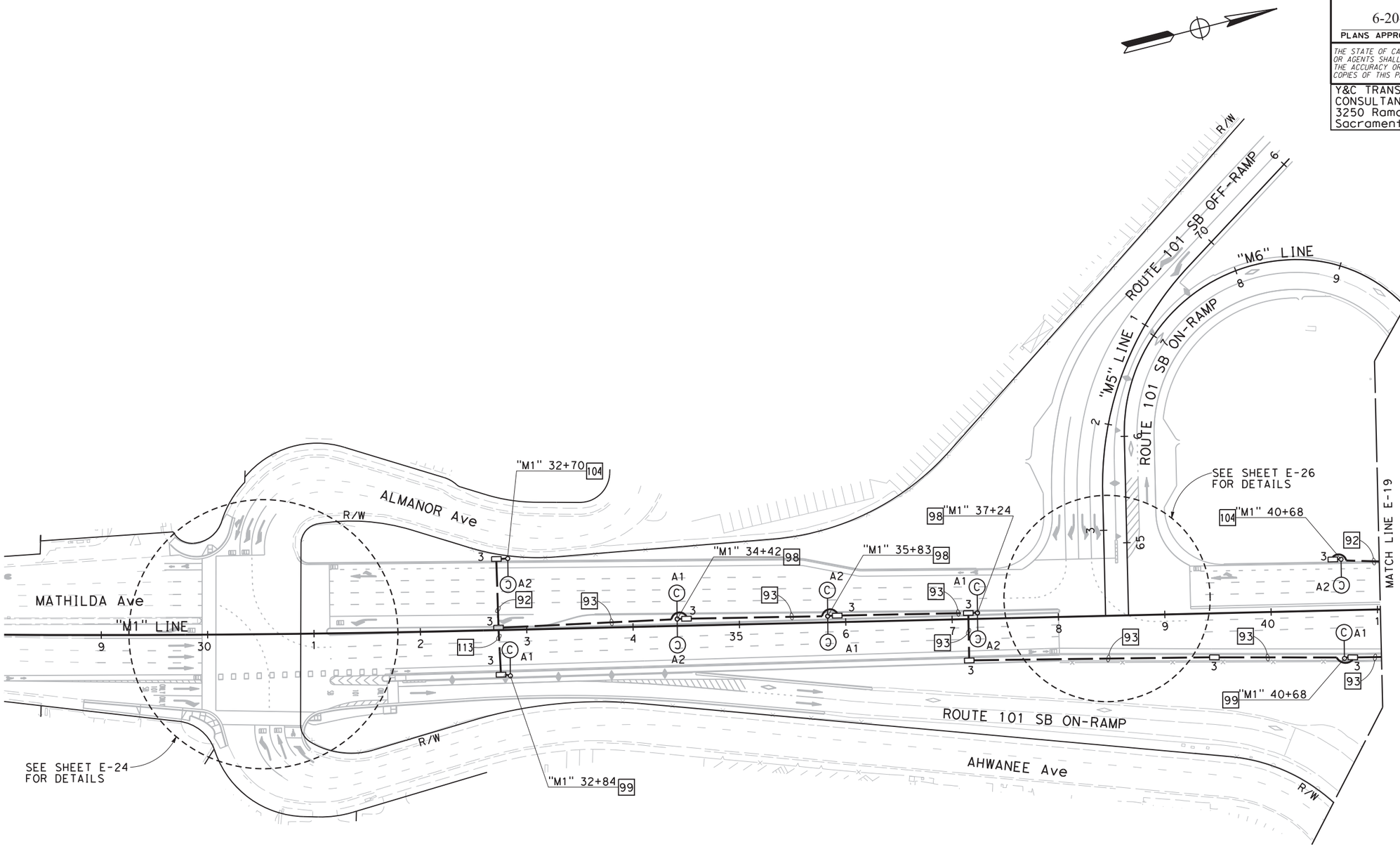

FOR NOTES, SYMBOLS, ABBREVIATIONS AND LEGEND, SEE SHEETS E-1 TO E-4

APPROVED FOR ELECTRICAL WORK ONLY

LIGHTING (CITY STREET)

SCALE: 1" = 50'

E-18

CALCULATED-DESIGNED BY: MENG YANG
CHECKED BY: DAN YAU
REVISED BY
DATE REVISED
CONSULTANT FUNCTIONAL SUPERVISOR: TIMOTHY J. LEE
STATE OF CALIFORNIA - DEPARTMENT OF TRANSPORTATION
Caltrans

LAST REVISION 00-00-00
DATE PLOTTED => $DATE
TIME PLOTTED => $TIME

BORDER LAST REVISED 7/2/2010
USERNAME => $USER
DGN FILE => $REQUEST
RELATIVE BORDER SCALE IS IN INCHES 0 1 2 3
UNIT 0712
PROJECT NUMBER & PHASE 0413000204

NOTE:

FOR ACCURATE RIGHT OF WAY DATA, CONTACT
RIGHT OF WAY ENGINEERING AT THE DISTRICT OFFICE.

Dist	COUNTY	ROUTE	POST MILES TOTAL PROJECT	SHEET No.	TOTAL SHEETS
04	SCL	101,237	45.2/45.8, 2.7/3.3	400	736

6-13-18
REGISTERED CIVIL ENGINEER DATE

REGISTERED PROFESSIONAL ENGINEER
KIN Y. CHAN
No. 55391
Exp. 12/31/18
CIVIL
STATE OF CALIFORNIA

6-20-18
PLANS APPROVAL DATE

THE STATE OF CALIFORNIA OR ITS OFFICERS OR AGENTS SHALL NOT BE RESPONSIBLE FOR THE ACCURACY OR COMPLETENESS OF SCANNED COPIES OF THIS PLAN SHEET.

Y&C TRANSPORTATION CONSULTANTS, INC.
3250 Ramos Circle
Sacramento, CA 95827

VTA
3331 N First St
Building B
San Jose, CA 95134

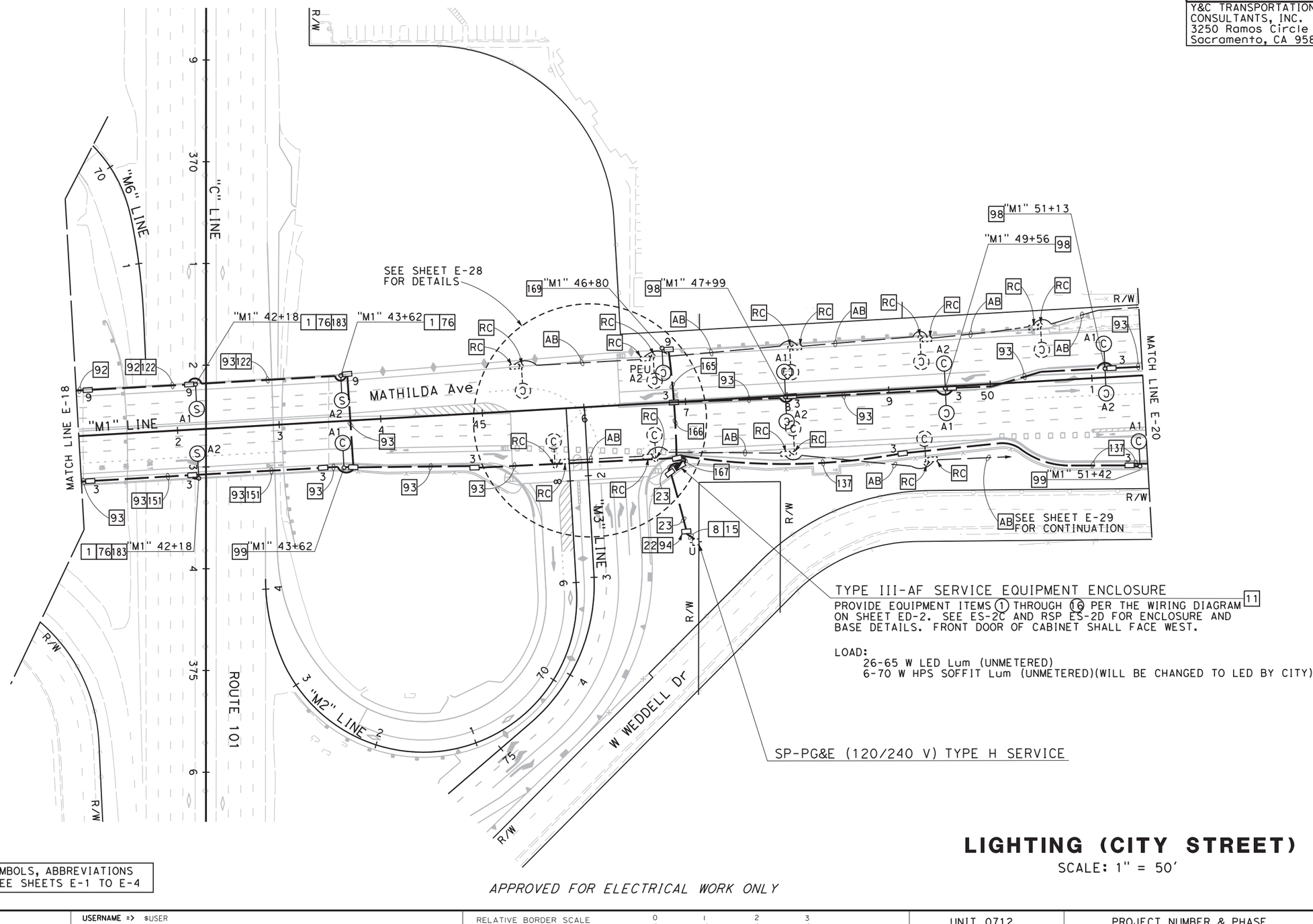

TYPE III-AF SERVICE EQUIPMENT ENCLOSURE 11

PROVIDE EQUIPMENT ITEMS (1) THROUGH (16) PER THE WIRING DIAGRAM ON SHEET ED-2. SEE ES-2C AND RSP ES-2D FOR ENCLOSURE AND BASE DETAILS. FRONT DOOR OF CABINET SHALL FACE WEST.

LOAD:
26-65 W LED Lum (UNMETERED)
6-70 W HPS SOFFIT Lum (UNMETERED)(WILL BE CHANGED TO LED BY CITY)

SP-PG&E (120/240 V) TYPE H SERVICE

FOR NOTES, SYMBOLS, ABBREVIATIONS AND LEGEND, SEE SHEETS E-1 TO E-4

APPROVED FOR ELECTRICAL WORK ONLY

LIGHTING (CITY STREET)

SCALE: 1" = 50'

E-19

CALCULATED-DESIGNED BY: MENG YANG
CHECKED BY: DAN YAU
REVISED BY
DATE REVISED
CONSULTANT FUNCTIONAL SUPERVISOR: TIMOTHY J. LEE
STATE OF CALIFORNIA - DEPARTMENT OF TRANSPORTATION

LAST REVISION DATE PLOTTED => $DATE
TIME PLOTTED => $TIME
00-00-00

BORDER LAST REVISED 7/2/2010
USERNAME => $USER
DGN FILE => $REQUEST
RELATIVE BORDER SCALE IS IN INCHES 0 1 2 3
UNIT 0712
PROJECT NUMBER & PHASE 0413000204

NOTE:

FOR ACCURATE RIGHT OF WAY DATA, CONTACT
RIGHT OF WAY ENGINEERING AT THE DISTRICT OFFICE.

Dist	COUNTY	ROUTE	POST MILES TOTAL PROJECT	SHEET No.	TOTAL SHEETS
04	SCL	101,237	45.2/45.8, 2.7/3.3	401	736

REGISTERED CIVIL ENGINEER — DATE: 6-13-18

PLANS APPROVAL DATE: 6-20-18

REGISTERED PROFESSIONAL ENGINEER — KIN Y. CHAN — No. 55391 — Exp. 12/31/18 — CIVIL — STATE OF CALIFORNIA

THE STATE OF CALIFORNIA OR ITS OFFICERS OR AGENTS SHALL NOT BE RESPONSIBLE FOR THE ACCURACY OR COMPLETENESS OF SCANNED COPIES OF THIS PLAN SHEET.

Y&C TRANSPORTATION CONSULTANTS, INC. 3250 Ramos Circle Sacramento, CA 95827	VTA 3331 N First St Building B San Jose, CA 95134

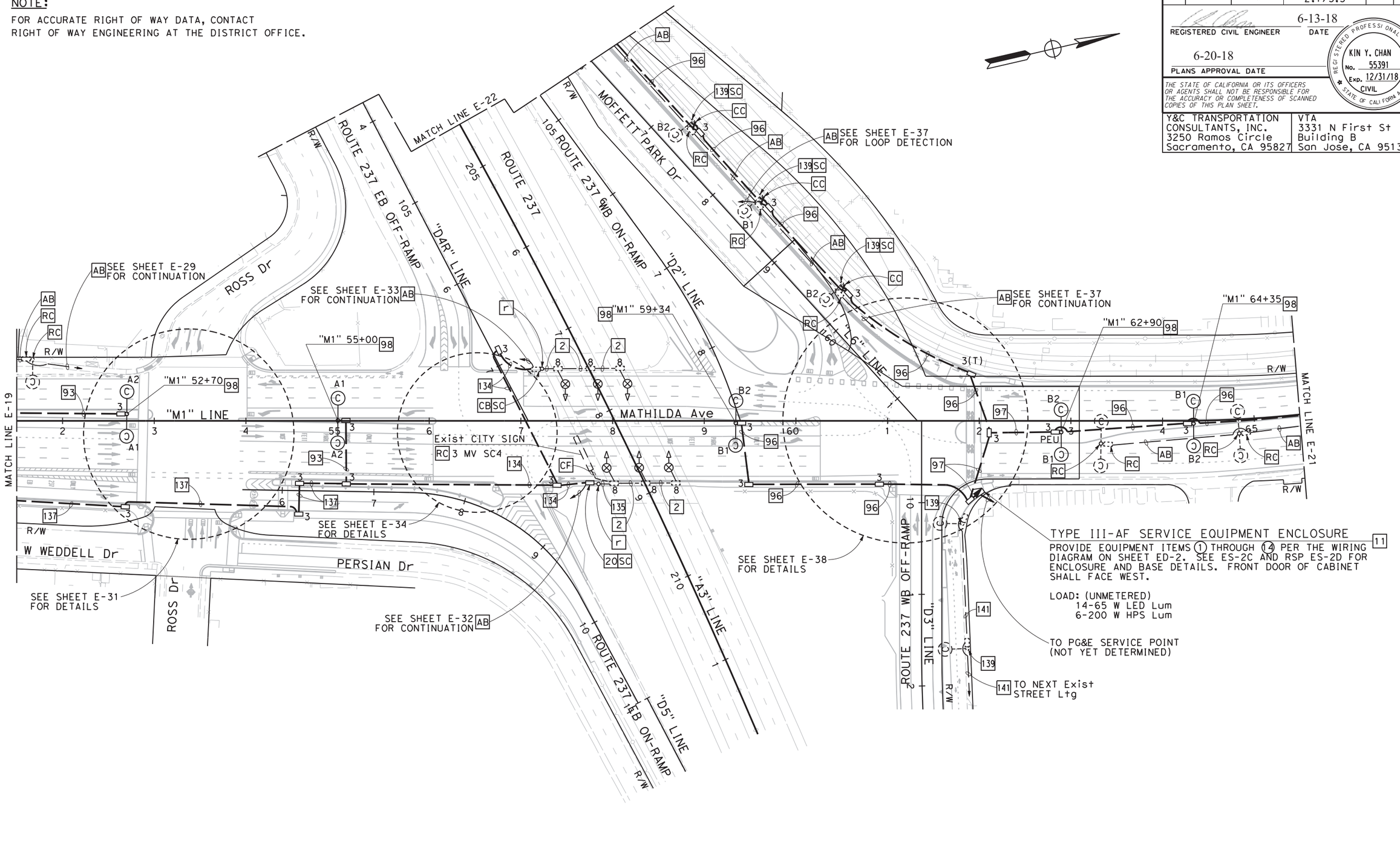

FOR NOTES, SYMBOLS, ABBREVIATIONS AND LEGEND, SEE SHEETS E-1 TO E-4

APPROVED FOR ELECTRICAL WORK ONLY

LIGHTING (CITY STREET)

SCALE: 1" = 50'

E-20

MENG YANG — DESIGNED BY
DAN YAU — CALCULATED BY
CHECKED BY
TIMOTHY J. LEE — CONSULTANT FUNCTIONAL SUPERVISOR
REVISED BY — DATE REVISED

STATE OF CALIFORNIA - DEPARTMENT OF TRANSPORTATION — Caltrans

LAST REVISION 00-00-00 — DATE PLOTTED => $DATE — TIME PLOTTED => $TIME

BORDER LAST REVISED 7/2/2010 — USERNAME => $USER — DGN FILE => $REQUEST — RELATIVE BORDER SCALE IS IN INCHES 0 1 2 3 — UNIT 0712 — PROJECT NUMBER & PHASE 0413000204

NOTE:

FOR ACCURATE RIGHT OF WAY DATA, CONTACT
RIGHT OF WAY ENGINEERING AT THE DISTRICT OFFICE.

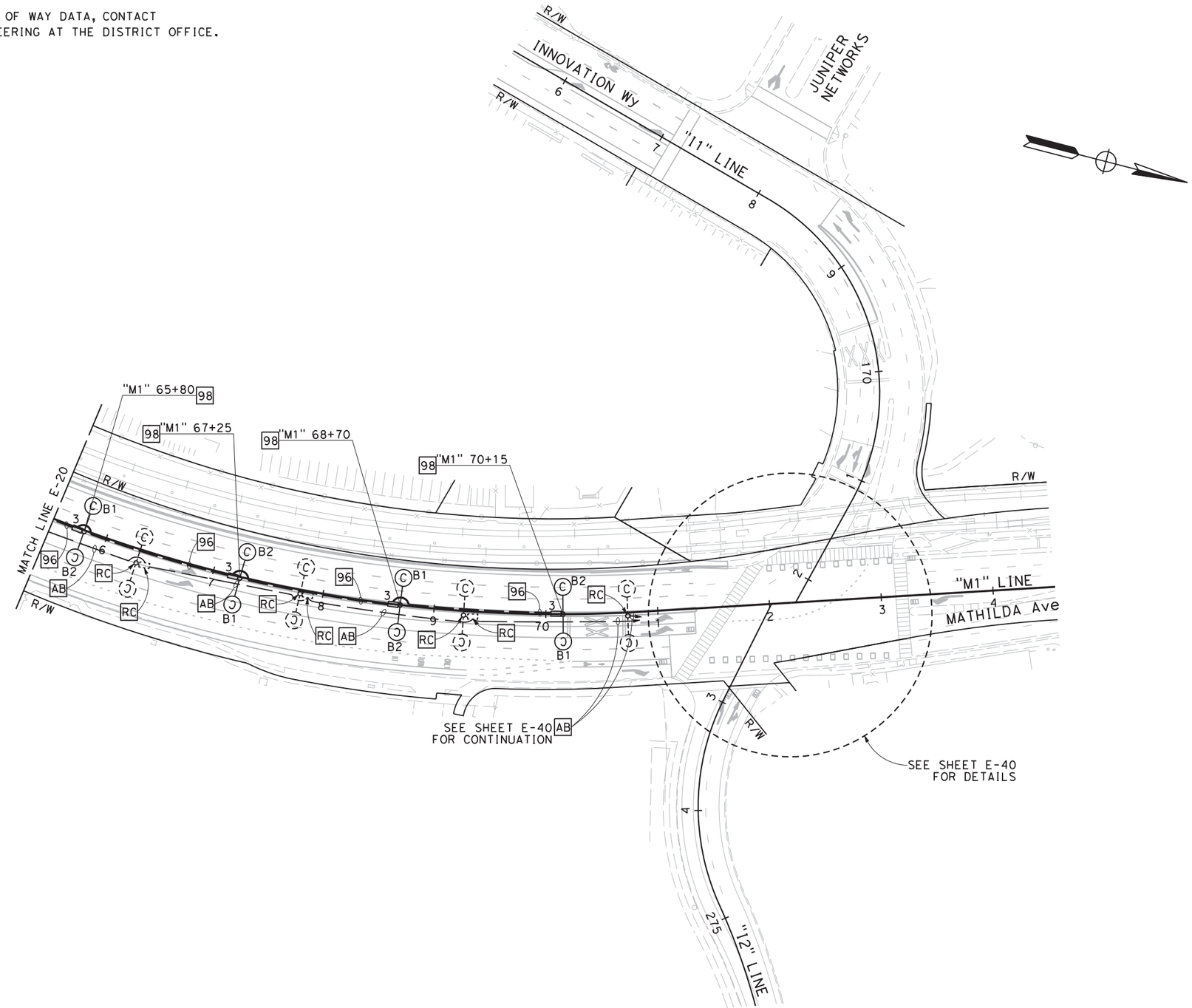

Dist	COUNTY	ROUTE	POST MILES TOTAL PROJECT	SHEET No.	TOTAL SHEETS
04	SCL	101,237	45.2/45.8, 2.7/3.3	402	736

6-13-18
REGISTERED CIVIL ENGINEER — DATE

6-20-18
PLANS APPROVAL DATE

REGISTERED PROFESSIONAL ENGINEER
KIN Y. CHAN
No. 55391
Exp. 12/31/18
CIVIL
STATE OF CALIFORNIA

THE STATE OF CALIFORNIA OR ITS OFFICERS OR AGENTS SHALL NOT BE RESPONSIBLE FOR THE ACCURACY OR COMPLETENESS OF SCANNED COPIES OF THIS PLAN SHEET.

Y&C TRANSPORTATION CONSULTANTS, INC.
3250 Ramos Circle
Sacramento, CA 95827

VTA
3331 N First St
Building B
San Jose, CA 95134

FOR NOTES, SYMBOLS, ABBREVIATIONS AND LEGEND, SEE SHEETS E-1 TO E-4

APPROVED FOR ELECTRICAL WORK ONLY

LIGHTING (CITY STREET)

SCALE: 1" = 50'

E-21

CALCULATED- DESIGNED BY: MENG YANG
CHECKED BY: DAN YAU
REVISED BY / DATE REVISED
CONSULTANT FUNCTIONAL SUPERVISOR: TIMOTHY J. LEE
STATE OF CALIFORNIA - DEPARTMENT OF TRANSPORTATION
Caltrans

LAST REVISION: DATE PLOTTED => $DATE; TIME PLOTTED => $TIME; 00-00-00

BORDER LAST REVISED 7/2/2010 | USERNAME => $USER; DGN FILE => $REQUEST | RELATIVE BORDER SCALE IS IN INCHES 0 1 2 3 | UNIT 0712 | PROJECT NUMBER & PHASE 0413000204

Dist	COUNTY	ROUTE	POST MILES TOTAL PROJECT	SHEET No.	TOTAL SHEETS
04	SCL	101,237	45.2/45.8, 2.7/3.3	403	736

6-13-18
REGISTERED CIVIL ENGINEER — DATE

REGISTERED PROFESSIONAL ENGINEER
KIN Y. CHAN
No. 55391
Exp. 12/31/18
CIVIL
STATE OF CALIFORNIA

6-20-18
PLANS APPROVAL DATE

THE STATE OF CALIFORNIA OR ITS OFFICERS OR AGENTS SHALL NOT BE RESPONSIBLE FOR THE ACCURACY OR COMPLETENESS OF SCANNED COPIES OF THIS PLAN SHEET.

Y&C TRANSPORTATION CONSULTANTS, INC.
3250 Ramos Circle
Sacramento, CA 95827

VTA
3331 N First St
Building B
San Jose, CA 95134

NOTE:
FOR ACCURATE RIGHT OF WAY DATA, CONTACT RIGHT OF WAY ENGINEERING AT THE DISTRICT OFFICE.

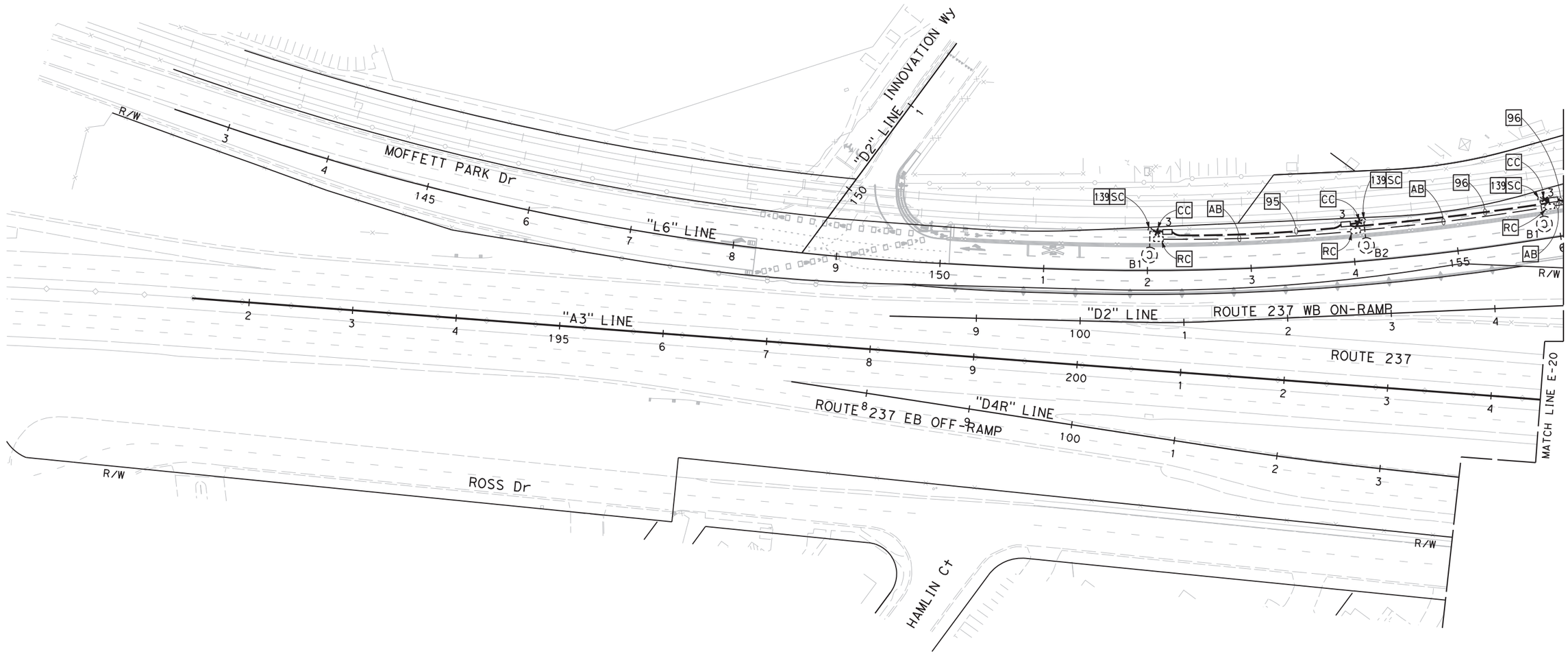

FOR NOTES, SYMBOLS, ABBREVIATIONS AND LEGEND, SEE SHEETS E-1 TO E-4

APPROVED FOR ELECTRICAL WORK ONLY

LIGHTING (CITY STREET)

SCALE: 1" = 50'

E-22

REVISED BY | DATE REVISED
MENG YANG | DAN YAU
CALCULATED-DESIGNED BY | CHECKED BY
CONSULTANT FUNCTIONAL SUPERVISOR: TIMOTHY J. LEE
STATE OF CALIFORNIA - DEPARTMENT OF TRANSPORTATION
Caltrans

LAST REVISION 00-00-00 | DATE PLOTTED => $DATE | TIME PLOTTED => $TIME

BORDER LAST REVISED 7/2/2010 | USERNAME => $USER | DGN FILE => $REQUEST | RELATIVE BORDER SCALE IS IN INCHES 0 1 2 3 | UNIT 0712 | PROJECT NUMBER & PHASE 0413000204

NOTE:

FOR ACCURATE RIGHT OF WAY DATA, CONTACT
RIGHT OF WAY ENGINEERING AT THE DISTRICT OFFICE.

	EQUIPMENT TO BE REMOVED AND SALVAGED TO CITY		
POLE LOCATION	APS	THERMAL Veh DETECTION CAMERA	CCTV CAMERA
(a)	1	1	
(b)		1	
(c)		1	1
(e)	1		
(f)	2	1	
TOTAL	4	4	1

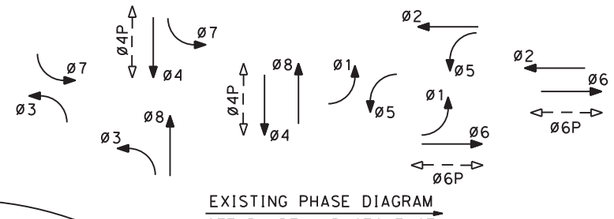

EXISTING PHASE DIAGRAM
STEADY DEMAND SEQUENCE
GPS EVUD

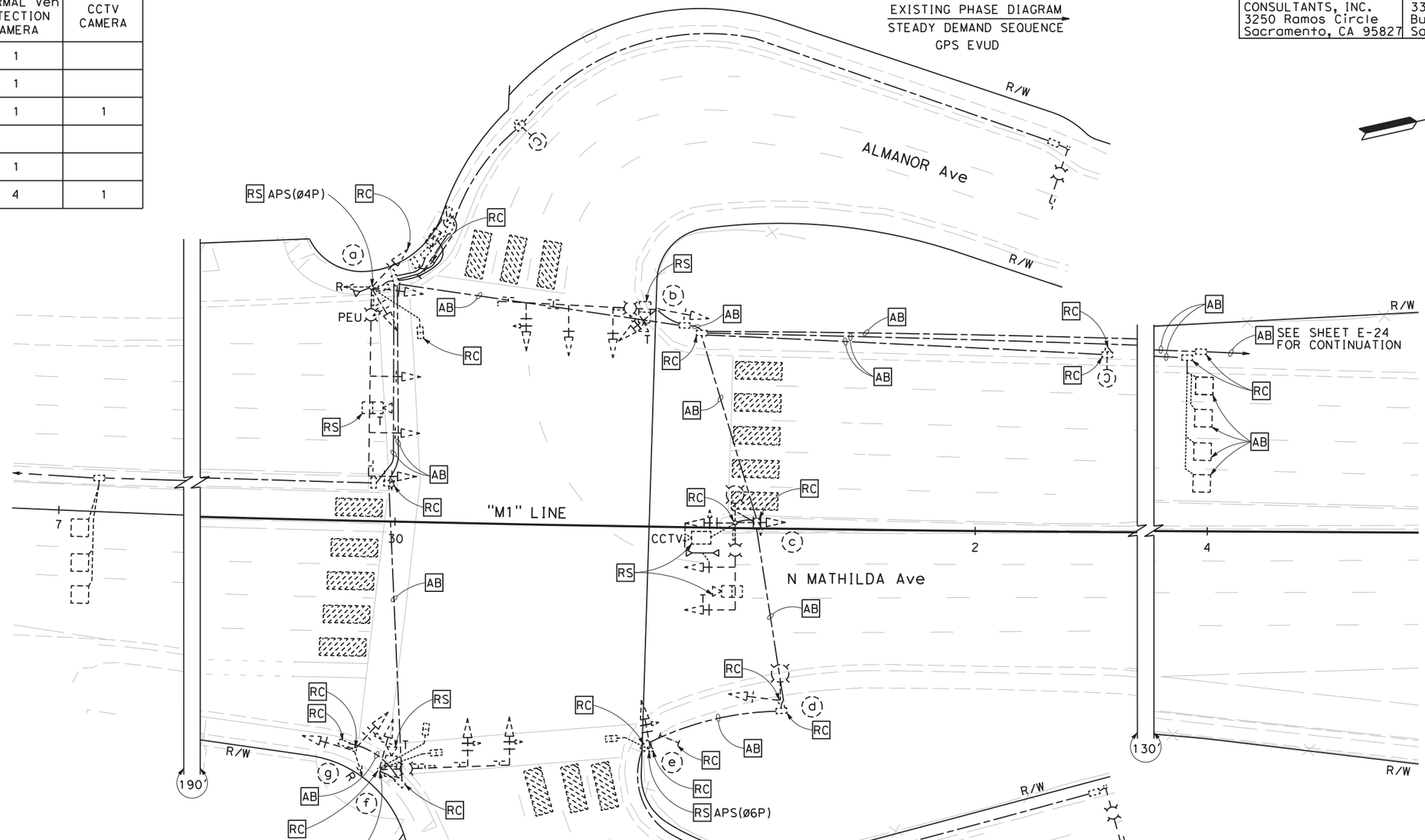

Dist	COUNTY	ROUTE	POST MILES TOTAL PROJECT	SHEET No.	TOTAL SHEETS
04	SCL	101,237	45.2/45.8, 2.7/3.3	404	736

6-13-18
REGISTERED CIVIL ENGINEER — DATE

KIN Y. CHAN
No. 55391
Exp. 12/31/18
CIVIL
REGISTERED PROFESSIONAL ENGINEER
STATE OF CALIFORNIA

6-20-18
PLANS APPROVAL DATE

THE STATE OF CALIFORNIA OR ITS OFFICERS OR AGENTS SHALL NOT BE RESPONSIBLE FOR THE ACCURACY OR COMPLETENESS OF SCANNED COPIES OF THIS PLAN SHEET.

Y&C TRANSPORTATION CONSULTANTS, INC.
3250 Ramos Circle
Sacramento, CA 95827

VTA
3331 N First St
Building B
San Jose, CA 95134

FOR NOTES, ABBREVIATIONS, SYMBOLS AND LEGEND, SEE SHEETS E-1 TO E-4

EXISTING

APPROVED FOR ELECTRICAL WORK ONLY

SIGNAL AND LIGHTING (CITY STREET LOCATION 1)

SCALE: 1" = 20'

E-23

REVISED BY | DATE REVISED
MENG YANG | DAN YAU
CALCULATED-DESIGNED BY | CHECKED BY
CONSULTANT FUNCTIONAL SUPERVISOR: TIMOTHY J.LEE
STATE OF CALIFORNIA - DEPARTMENT OF TRANSPORTATION
Caltrans

LAST REVISION 00-00-00 | DATE PLOTTED => $DATE | TIME PLOTTED => $TIME

BORDER LAST REVISED 7/2/2010 | USERNAME => $USER | DGN FILE => $REQUEST | RELATIVE BORDER SCALE IS IN INCHES 0 1 2 3 | UNIT 0712 | PROJECT NUMBER & PHASE 0413000204

Dist	COUNTY	ROUTE	POST MILES TOTAL PROJECT	SHEET No.	TOTAL SHEETS
04	SCL	101,237	45.2/45.8, 2.7/3.3	405	736

6-13-18
REGISTERED CIVIL ENGINEER DATE

6-20-18
PLANS APPROVAL DATE

REGISTERED PROFESSIONAL ENGINEER
KIN Y. CHAN
No. 55391
Exp. 12/31/18
CIVIL
STATE OF CALIFORNIA

THE STATE OF CALIFORNIA OR ITS OFFICERS OR AGENTS SHALL NOT BE RESPONSIBLE FOR THE ACCURACY OR COMPLETENESS OF SCANNED COPIES OF THIS PLAN SHEET.

Y&C TRANSPORTATION CONSULTANTS, INC.
3250 Ramos Circle
Sacramento, CA 95827

VTA
3331 N First St
Building B
San Jose, CA 95134

NOTES:

1. FOR ACCURATE RIGHT OF WAY DATA, CONTACT RIGHT OF WAY ENGINEERING AT THE DISTRICT OFFICE.
2. FOR SCHEDULES, SEE SHEET E-25.

Exist PG&E SERVICE POINT (120/240 V)

Exist LOAD:
± 1000 W TRAFFIC SIGNAL (METERED)
4 - ±300 W IISNS (METERED)
6 - 133 W LED LUMINAIRES (UNMETERED)
4 - 200 W HPS LUMINAIRES (UNMETERED)

MODIFIED LOAD:
± 1000 W TRAFFIC SIGNAL (METERED)
2 - ±300 W IISNS (METERED)
2 - 55 W LED IISNS (METERED)
6 - 108 W LED LUMINAIRES (UNMETERED)
2 - 133 W LED LUMINAIRES (UNMETERED)
3 - 65 W HPS LUMINAIRES (UNMETERED)

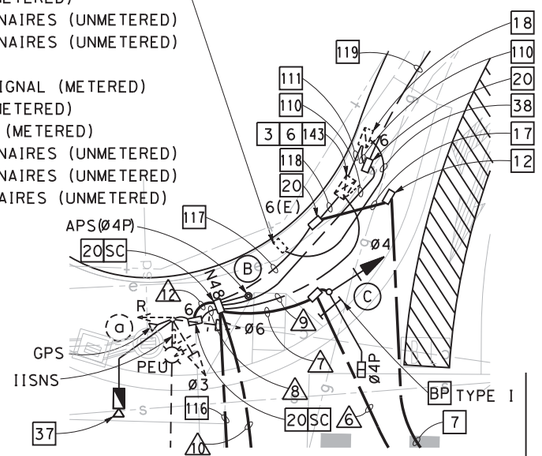

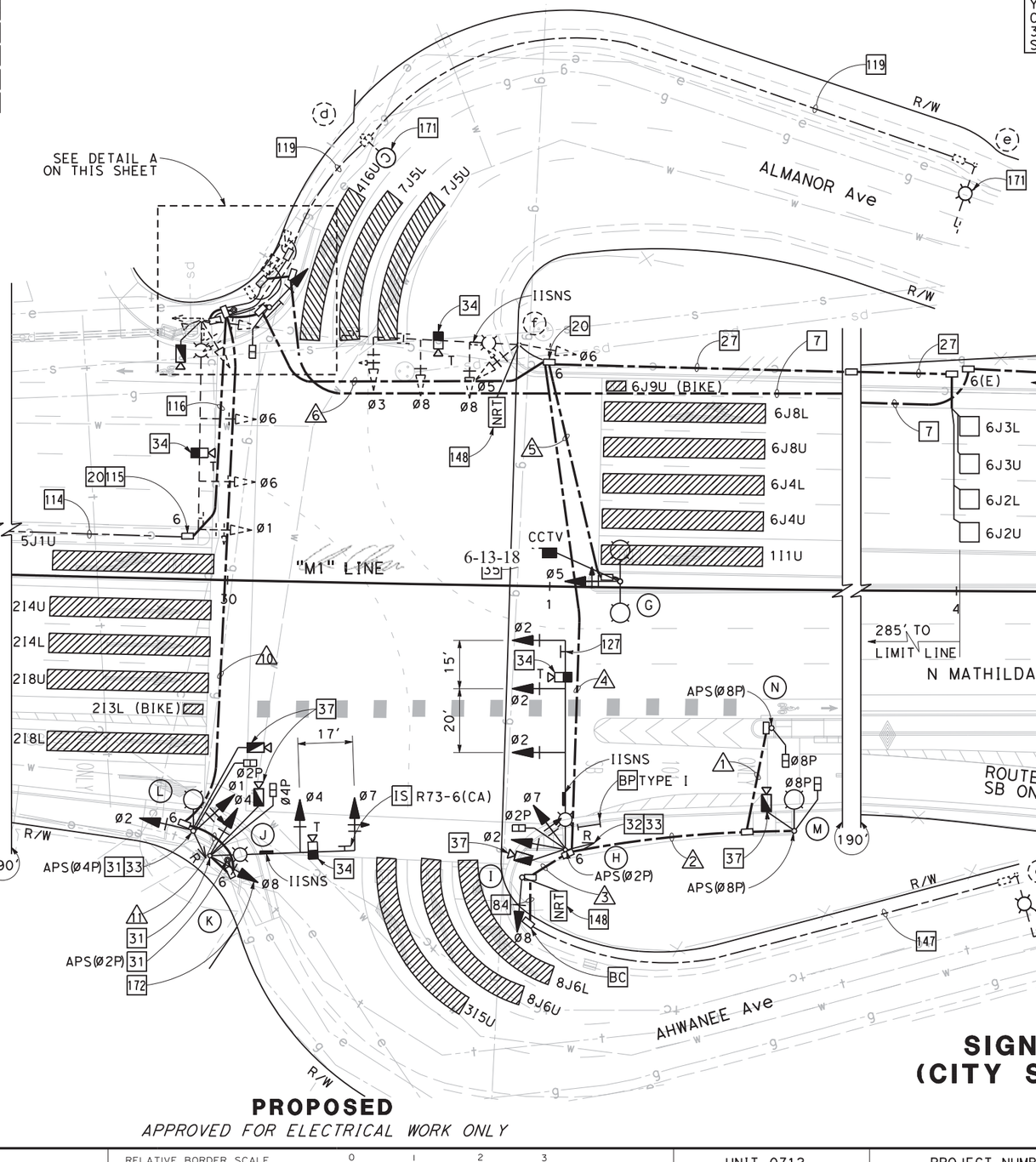

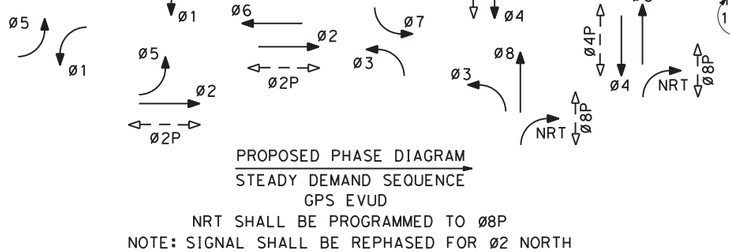

PROPOSED PHASE DIAGRAM
STEADY DEMAND SEQUENCE
GPS EVUD
NRT SHALL BE PROGRAMMED TO Ø8P
NOTE: SIGNAL SHALL BE REPHASED FOR Ø2 NORTH

FOR NOTES, ABBREVIATIONS, SYMBOLS AND LEGEND, SEE SHEETS E-1 TO E-4

PROPOSED
APPROVED FOR ELECTRICAL WORK ONLY

SIGNAL AND LIGHTING (CITY STREET LOCATION 1)

SCALE: 1" = 20'

E-24

STATE OF CALIFORNIA - DEPARTMENT OF TRANSPORTATION
CONSULTANT FUNCTIONAL SUPERVISOR: TIMOTHY J. LEE
CALCULATED-DESIGNED BY: MENG YANG
CHECKED BY: DAN YAU
REVISED BY / DATE REVISED

LAST REVISION 00-00-00
DATE PLOTTED => $DATE
TIME PLOTTED => $TIME

BORDER LAST REVISED 7/2/2010
USERNAME => $USER
DGN FILE => $REQUEST
RELATIVE BORDER SCALE IS IN INCHES 0 1 2 3
UNIT 0712
PROJECT NUMBER & PHASE 0413000204

SCHEDULES: (FOR SHEET E-24)

CONDUCTOR AND CONDUIT SCHEDULE

CONDUCTOR SCHEDULE	No. OF CONDUCTORS CONDUIT RUN NUMBER /1	/2	/3	/4	/5	/6	/7	/8	/9	/10	/11	/12
No. 14 CONDUCTORS												
Ø1									3	3		
Ø2				3		3	3	3	6	3		
Ø3						3	3	3	6			
Ø4							3		6	3	3	
Ø5					3	3	3		3			
Ø6						3	3	3	6			
Ø7				3		3	3		6	3	3	
Ø8			3	3		3	3		6	3	3	
Ø2P				2		2	2		4	2		
Ø4P							2		4	2	2	
Ø8P	2	2		2		2	2		2			
APS Ø2P				2		2	2		4	2	2	
APS Ø4P								2	4	2		
APS Ø8P	2	2		2		2	2		2			
PEU								3				
SPARES	3	3	3	3	3	3	3	3	6	3	3	
TOTAL No. 14	7	7	6	20	6	29	34	17	65	23	13	
No. 10 CONDUCTORS												
IISNS				2		2	2	2		2	2	
NRT ACTIVATED BLANK-OUT SIGN			2	2		2	2		2			
TOTAL No. 10			2	4		4	4	2	2	2	2	
No. 8 CONDUCTORS												
LIGHTING		2	2	2	2	2	2	2		2	2	
SIGNAL NEUTRAL				2	1	2	2	1	2	1	1	
GROUND	1	1	1	1	1	1	1	1	1	1	1	1
TOTAL No. 8	1	3	3	5	4	5	5	4	3	4	4	1
DETECTOR CABLES (DLC)												
2I2U									1			
2I2L									1			
2I3U									1			
6J2U						1	1		1			
6J2L						1	1		1			
6J3U						1	1		1			
6J3L						1	1		1			
TOTAL DETECTOR CABLES						4	4		7			
THERMAL VEHICLE DETECTION CABLE				1		2	2		4	1	1	1
THERMAL PEDESTRIAN DETECTION CABLE		1		2		2	2		5	2	1	1
CCTV CABLE					1	1	1		1			
GPS EVUC								1	1			
CONDUIT SIZE (INCHES)	2	2	2	3	3	2-3"	2-3"	2	2-3"	3	3	2
NEW/EXISTING CONDUIT	N	N	N	N	N	N	N	E	E	N	N	N
% FILL	6	12	7	17	7	16	17	23	30	17	13	13

NOTE: REMOVE Exist CONDUCTOR(S)/CABLE(S). ALL CONDUCTOR(S)/CABLE(S) SHALL BE NEW UNLESS OTHERWISE NOTED.

FOR NOTES, ABBREVIATIONS, SYMBOLS AND LEGEND, SEE SHEETS E-1 TO E-4

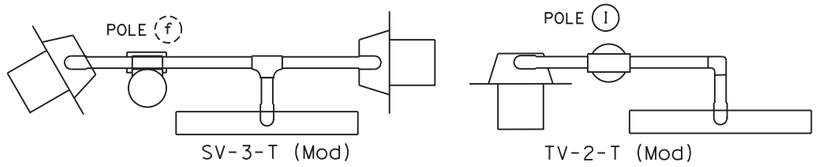

DETAIL A
NRT SIGN MOUNTING

POLE AND EQUIPMENT SCHEDULE

No.	STANDARD TYPE	SMA (FEET)	LMA (FEET)	VEHICLE SIGNAL MOUNTING MAST ARM	VEHICLE SIGNAL MOUNTING POLE	PEDESTRIAN SIGNAL MOUNTING	APS Ø	APS ARROW	LED LUMINAIRE (WATT)	REMARKS *
(a)	Exist 61-5-100	65	15	MAS MAS MAS	SV-2-TB				133	Exist GPS EVUD, IISNS, PEU AND SIGN PANEL TO REMAIN. 34 37
(B)	PBA POST						4P	←		
(C)	1-B				TV-1-T	SP-1-T				
(d)	Exist CITY STANDARD		6						65	171
(e)	Exist 17	20	12						65	171
(f)	Exist CITY STANDARD	55	15	MAS MAS MAS	SV-3-T # (Mod)				133	Exist IISNS AND SIGN PANEL TO REMAIN. 34 148
(G)	15D		8		SV-1-T				2-108▼	35
(H)	61-5-100	65	15	MAS ● MAS ● MAS ●	SV-2-TB	SP-1-T	6P	→	108▼	INSTALL RED LIGHT ENFORCEMENT UNITS FOR Ø6 AND Ø7. 32 33 34 37 127
(I)	1-B				TV-2-T # (MOD)					148
(J)	PBA POST						6P	←		
(K)	26-4-100	45	15	MAS ● MAS ●	SV-1-T SV-1-T	SP-1-T			108▼	IS R73-6(CA). 31 34 37 172
(L)	15TS		15		SV-2-TA	SP-1-T	4P	→	108▼	INSTALL RED LIGHT ENFORCEMENT UNITS FOR Ø5. 33 37
(M)	15TS		12			SP-1-T	8P	←	108▼	37
(N)	1-B					TP-1-T	8P	←		
(O)	Exist 17	20	12						65	171

*OTHER REQUIREMENTS ARE COVERED BY NOTES, LEGEND, SPECIAL PROVISIONS AND STANDARD SPECIFICATIONS. FOR TYPE OF STANDARD, VEHICLE AND PEDESTRIAN SIGNAL MOUNTING, SEE STANDARD PLANS.

● INSTALL ASTRO-BRAC MOUNTING, OR APPROVED EQUAL, PER CITY'S STANDARD.

SEE MOUNTING DETAIL A ON THIS SHEET.

▼ INSTALL 108 W LED PHILIPS ROADFOCUS LUMINAIRE (MODEL No. RFM-108W32LED4K-G2-R3M-UNV-DMG-RCD7-SP2-API-GY3) OR APPROVED EQUAL.

LED INTERNALLY ILLUMINATED STREET NAME SIGN SCHEDULE

No.	FONT	PANEL SIZE	LETTER SIZE	PANEL FACING	MESSAGE
(H)	FHWA SERIES E	96"	8" U.C. 6" L.C.	SOUTH	Ahwanee →
				NORTH	← Ahwanee
(J)	FHWA SERIES E	96"	8" U.C. 6" L.C.	BOTH	N. Mathilda

PROPOSED

Dist	COUNTY	ROUTE	POST MILES TOTAL PROJECT	SHEET No.	TOTAL SHEETS
04	SCL	101,237	45.2/45.8, 2.7/3.3	406	736

6-13-18
REGISTERED CIVIL ENGINEER DATE

6-20-18
PLANS APPROVAL DATE

REGISTERED PROFESSIONAL ENGINEER — KIN Y. CHAN No. 55391 Exp. 12/31/18 CIVIL — STATE OF CALIFORNIA

THE STATE OF CALIFORNIA OR ITS OFFICERS OR AGENTS SHALL NOT BE RESPONSIBLE FOR THE ACCURACY OR COMPLETENESS OF SCANNED COPIES OF THIS PLAN SHEET.

Y&C TRANSPORTATION CONSULTANTS, INC.
3250 Ramos Circle
Sacramento, CA 95827

VTA
3331 N First St
Building B
San Jose, CA 95134

REVISED BY | DATE REVISED
MENG YANG | DAN YAU
CALCULATED-DESIGNED BY | CHECKED BY
CONSULTANT FUNCTIONAL SUPERVISOR: TIMOTHY J. LEE
STATE OF CALIFORNIA - DEPARTMENT OF TRANSPORTATION
Caltrans

SIGNAL AND LIGHTING (CITY STREET LOCATION 1)

E-25

LAST REVISION 00-00-00 | DATE PLOTTED => $DATE | TIME PLOTTED => $TIME

NOTES:

1. FOR ACCURATE RIGHT OF WAY DATA, CONTACT RIGHT OF WAY ENGINEERING AT THE DISTRICT OFFICE.
2. FOR SCHEDULES, SEE SHEET E-27.

Dist	COUNTY	ROUTE	POST MILES TOTAL PROJECT	SHEET No.	TOTAL SHEETS
04	SCL	101,237	45.2/45.8, 2.7/3.3	407	736

6-13-18
REGISTERED CIVIL ENGINEER DATE

KIN Y. CHAN No. 55391 Exp. 12/31/18 CIVIL — REGISTERED PROFESSIONAL ENGINEER — STATE OF CALIFORNIA

6-20-18
PLANS APPROVAL DATE

THE STATE OF CALIFORNIA OR ITS OFFICERS OR AGENTS SHALL NOT BE RESPONSIBLE FOR THE ACCURACY OR COMPLETENESS OF SCANNED COPIES OF THIS PLAN SHEET.

Y&C TRANSPORTATION CONSULTANTS, INC.
3250 Ramos Circle
Sacramento, CA 95827

VTA
3331 N First St
Building B
San Jose, CA 95134

DETAIL A
NO SCALE

DETAIL B
NO SCALE

DETAIL C
EQUIPMENT LAYOUT (Typ)
NO SCALE

PROPOSED PHASE DIAGRAM
STEADY DEMAND SEQUENCE
GPS EVUD

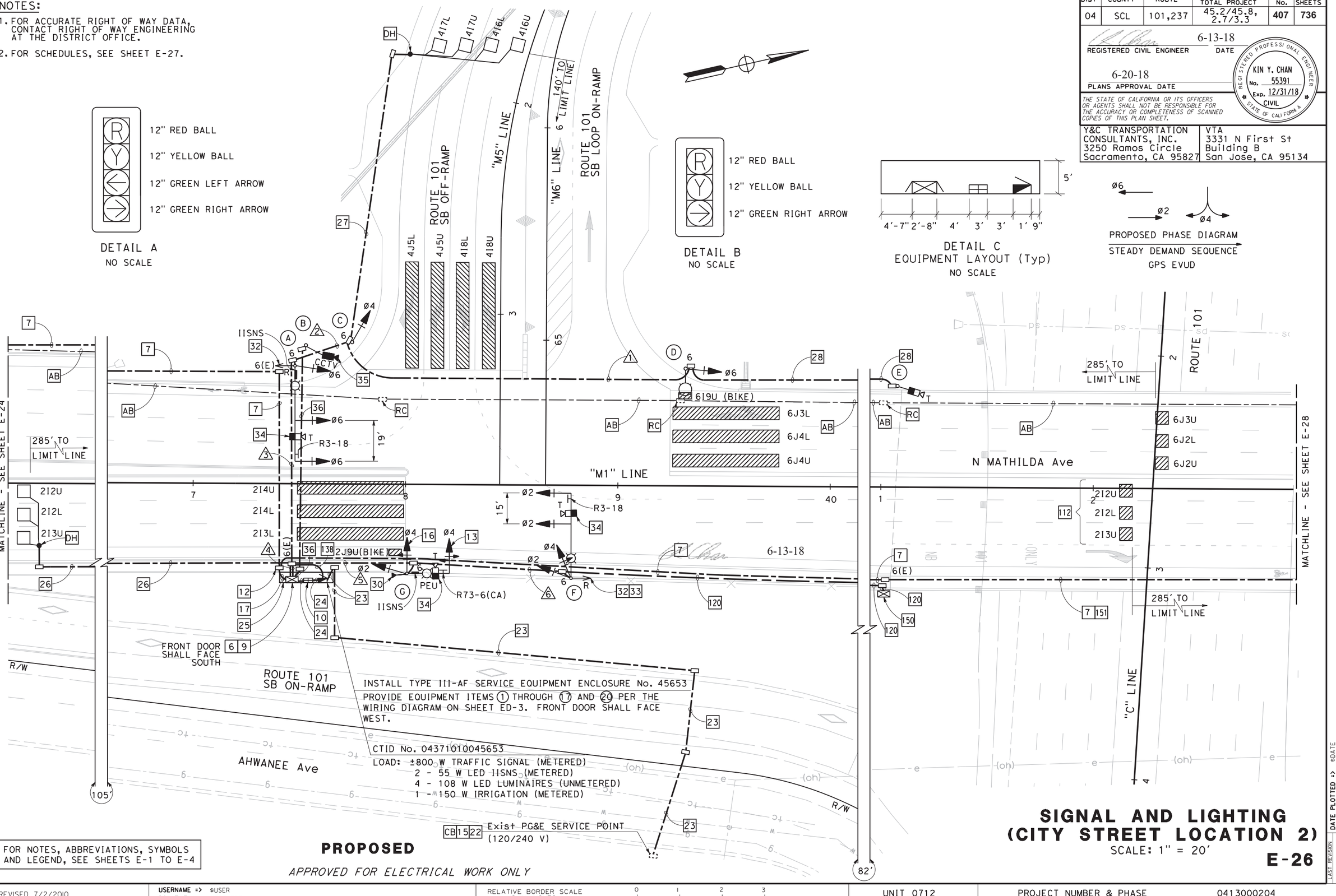

FOR NOTES, ABBREVIATIONS, SYMBOLS AND LEGEND, SEE SHEETS E-1 TO E-4

PROPOSED

APPROVED FOR ELECTRICAL WORK ONLY

SIGNAL AND LIGHTING (CITY STREET LOCATION 2)

SCALE: 1" = 20'

E-26

STATE OF CALIFORNIA - DEPARTMENT OF TRANSPORTATION
CONSULTANT FUNCTIONAL SUPERVISOR: TIMOTHY J. LEE
CALCULATED-DESIGNED BY: MENG YANG
CHECKED BY: DAN YAU
REVISED BY | DATE REVISED

LAST REVISION DATE PLOTTED => $DATE
TIME PLOTTED => $TIME
00-00-00

BORDER LAST REVISED 7/2/2010
USERNAME => $USER
DGN FILE => $REQUEST
RELATIVE BORDER SCALE IS IN INCHES 0 1 2 3
UNIT 0712
PROJECT NUMBER & PHASE 0413000204

SCHEDULES: (FOR SHEET E-26)

CONDUCTOR AND CONDUIT SCHEDULE

CONDUCTOR SCHEDULE	No. OF CONDUCTORS — CONDUIT RUN NUMBER 1	2	3	4	5	6
No. 14 CONDUCTORS						
Ø2				3	3	3
Ø4		3	3	6	3	3
Ø6	3	3	3	3		
PEU					3	
SPARES	3	3	3	6	3	3
TOTAL No. 14	6	9	9	18	12	9
No. 10 CONDUCTORS						
IISNS			2		2	
IRRIGATION					2	2
TOTAL No. 10			2		4	2
No. 8 CONDUCTORS						
LIGHTING	2	2	2		2	2
SIGNAL NEUTRAL	1	1	1	2	1	1
GROUND	1	1	1	1	1	1
TOTAL No. 8	4	4	4	3	4	4
DETECTOR CABLES (DLC)						
212U				1		
212L				1		
213U				1		
416U		1	1	1		
416L		1	1	1		
417U		1	1	1		
417L		1	1	1		
TOTAL DETECTOR CABLES		4	4	7		
THERMAL VEHICLE DETECTION CABLE	1	1	2	4	2	1
GPS EVUC				1	1	
CONDUIT SIZE (INCHES)	3	3	3	2-3"	3	3
NEW/EXISTING CONDUIT	N	N	N	N	N	N
% FILL	9	13	18	17	18	10

POLE AND EQUIPMENT SCHEDULE

No.	STANDARD TYPE	SMA (FEET)	LMA (FEET)	VEHICLE SIGNAL MOUNTING MAST ARM●	POLE	PEDESTRIAN SIGNAL MOUNTING	APS Ø	APS ARROW	LED▼ LUMINAIRE (WATT)	REMARKS *
(A)	26-4-100	45	15	MAS MAS	SV-1-T				108	INSTALL RED LIGHT ENFORCEMENT UNIT FOR Ø6. IS R3-18. 32 34
(B)	CCTV 40									35
(C)	1-B				TV-1-T					
(D)	15TS		15		SV-1-T				108	
(E)	15TS									INSTALL THERMAL VEHICLE DETECTION CAMERA TO POLE.
(F)	26-4-100	40	15	MAS MAS	SV-2-TB				108	INSTALL RED LIGHT ENFORCEMENT UNITS FOR Ø2 AND Ø4. IS R3-18. 32 33 34
(G)	19-4-100	20▮	15	MAS-4B	SV-2-TB				108	INSTALL PEU ON TOP OF POLE. IS R73-6(CA). 13 16 30 34

*OTHER REQUIREMENTS ARE COVERED BY NOTES, LEGEND, SPECIAL PROVISIONS AND STANDARD SPECIFICATIONS. FOR TYPE OF STANDARD, VEHICLE AND PEDESTRIAN SIGNAL MOUNTING, SEE STANDARD PLANS.

● INSTALL ASTRO-BRAC MOUNTING, OR APPROVED EQUAL, PER CITY'S STANDARD.

▼ INSTALL 108 W LED PHILIPS ROADFOCUS LUMINAIRE (MODEL No. RFM-108W32LED4K-G2-R3M-UNV-DMG-RCD7-SP2-API-GY3) OR APPROVED EQUAL.

▮ INSTALL SHORTER MAST ARM.

LED INTERNALLY ILLUMINATED STREET NAME SIGN SCHEDULE

No.	FONT	PANEL SIZE	LETTER SIZE	PANEL FACING	MESSAGE
(A)	FHWA SERIES E	96"	8" U.C. 6" L.C.	NORTH	US 101 South ➡
(G)	FHWA SERIES E	96"	8" U.C. 6" L.C.	WEST	N. Mathilda

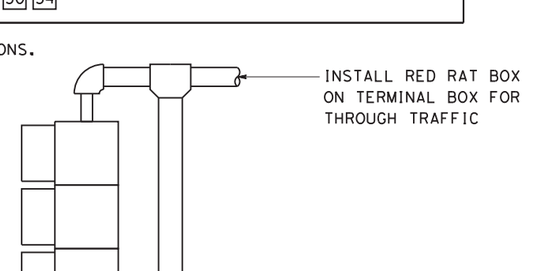

DETAIL A
NO SCALE

FOR NOTES, ABBREVIATIONS, SYMBOLS AND LEGEND, SEE SHEETS E-1 TO E-4

PROPOSED

SIGNAL AND LIGHTING (CITY STREET LOCATION 2)

E-27

Dist	COUNTY	ROUTE	POST MILES TOTAL PROJECT	SHEET No.	TOTAL SHEETS
04	SCL	101,237	45.2/45.8, 2.7/3.3	408	736

6-13-18
REGISTERED CIVIL ENGINEER — DATE

KIN Y. CHAN No. 55391 Exp. 12/31/18 CIVIL — REGISTERED PROFESSIONAL ENGINEER — STATE OF CALIFORNIA

6-20-18
PLANS APPROVAL DATE

THE STATE OF CALIFORNIA OR ITS OFFICERS OR AGENTS SHALL NOT BE RESPONSIBLE FOR THE ACCURACY OR COMPLETENESS OF SCANNED COPIES OF THIS PLAN SHEET.

Y&C TRANSPORTATION CONSULTANTS, INC.
3250 Ramos Circle
Sacramento, CA 95827

VTA
3331 N First St
Building B
San Jose, CA 95134

REVISED BY | DATE REVISED
MENG YANG | DAN YAU
CALCULATED-DESIGNED BY | CHECKED BY
CONSULTANT FUNCTIONAL SUPERVISOR: TIMOTHY J. LEE

STATE OF CALIFORNIA - DEPARTMENT OF TRANSPORTATION
Caltrans

LAST REVISION 00-00-00 | DATE PLOTTED => $DATE | TIME PLOTTED => $TIME

BORDER LAST REVISED 7/2/2010 | USERNAME => $USER | DGN FILE => $REQUEST | RELATIVE BORDER SCALE IS IN INCHES 0 1 2 3 | UNIT 0712 | PROJECT NUMBER & PHASE 0413000204

NOTES:

1. FOR ACCURATE RIGHT OF WAY DATA, CONTACT RIGHT OF WAY ENGINEERING AT THE DISTRICT OFFICE.
2. FOR SCHEDULES, SEE SHEET E-29.

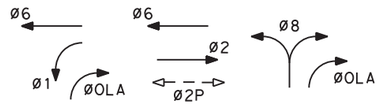

PROPOSED PHASE DIAGRAM

STEADY DEMAND SEQUENCE
øOLA = ø1 + ø8
GPS EVUD

Dist	COUNTY	ROUTE	POST MILES TOTAL PROJECT	SHEET No.	TOTAL SHEETS
04	SCL	101,237	45.2/45.8, 2.7/3.3	409	736

6-13-18
REGISTERED CIVIL ENGINEER DATE

REGISTERED PROFESSIONAL ENGINEER
KIN Y. CHAN
No. 55391
Exp. 12/31/18
CIVIL
STATE OF CALIFORNIA

6-20-18
PLANS APPROVAL DATE

THE STATE OF CALIFORNIA OR ITS OFFICERS OR AGENTS SHALL NOT BE RESPONSIBLE FOR THE ACCURACY OR COMPLETENESS OF SCANNED COPIES OF THIS PLAN SHEET.

Y&C TRANSPORTATION CONSULTANTS, INC.
3250 Ramos Circle
Sacramento, CA 95827

VTA
3331 N First St
Building B
San Jose, CA 95134

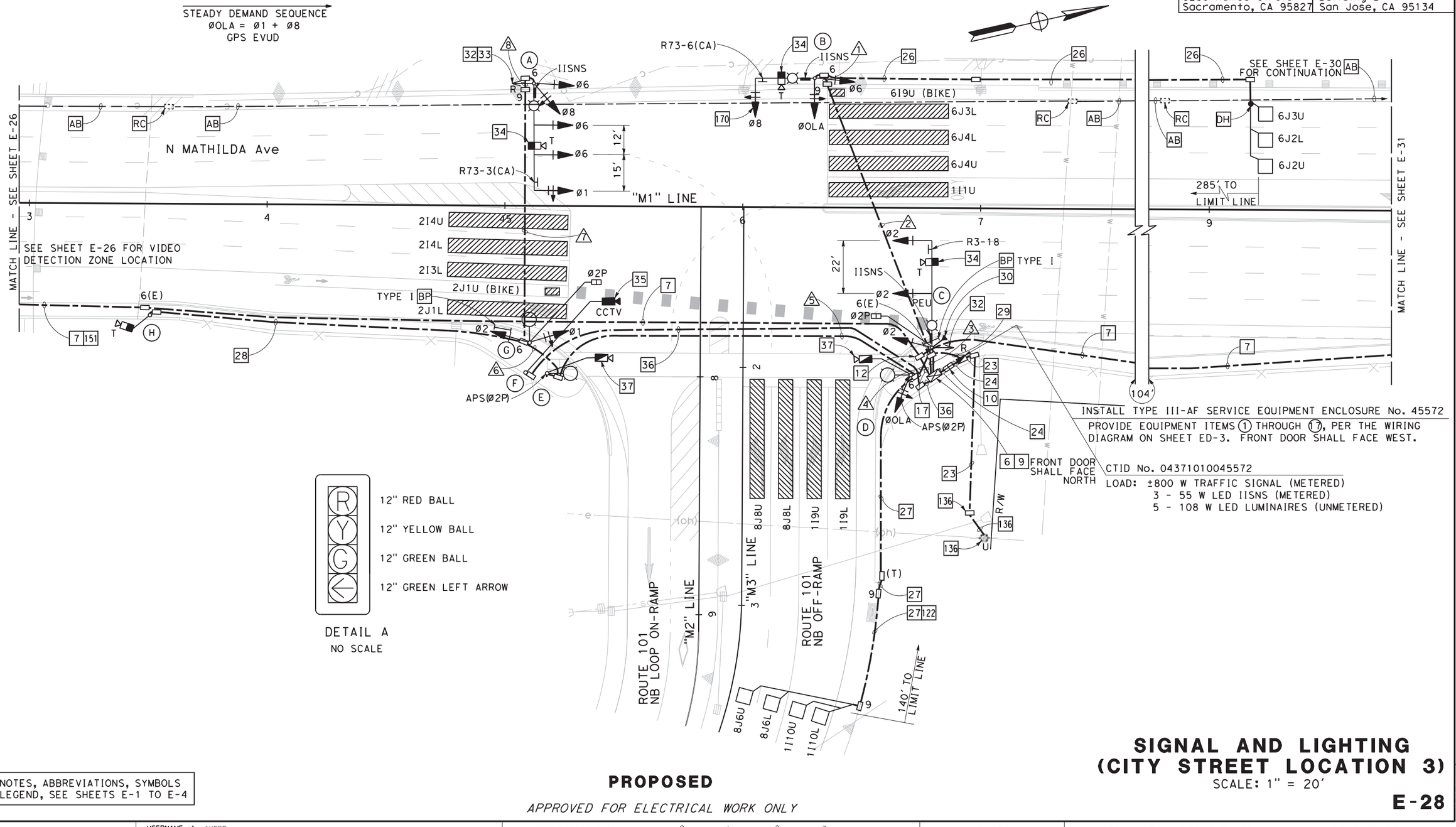

INSTALL TYPE III-AF SERVICE EQUIPMENT ENCLOSURE No. 45572
PROVIDE EQUIPMENT ITEMS (1) THROUGH (17), PER THE WIRING DIAGRAM ON SHEET ED-3. FRONT DOOR SHALL FACE WEST.

6 9 FRONT DOOR SHALL FACE NORTH

CTID No. 04371010045572
LOAD: ±800 W TRAFFIC SIGNAL (METERED)
3 - 55 W LED IISNS (METERED)
5 - 108 W LED LUMINAIRES (UNMETERED)

DETAIL A
NO SCALE

FOR NOTES, ABBREVIATIONS, SYMBOLS AND LEGEND, SEE SHEETS E-1 TO E-4

PROPOSED

APPROVED FOR ELECTRICAL WORK ONLY

SIGNAL AND LIGHTING (CITY STREET LOCATION 3)

SCALE: 1" = 20'

E-28

REVISED BY | DATE REVISED
MENG YANG | DAN YAU
CALCULATED-DESIGNED BY | CHECKED BY
CONSULTANT FUNCTIONAL SUPERVISOR: TIMOTHY J. LEE
STATE OF CALIFORNIA - DEPARTMENT OF TRANSPORTATION
Gibbons

LAST REVISION 00-00-00 | DATE PLOTTED => $DATE | TIME PLOTTED => $TIME

BORDER LAST REVISED 7/2/2010 | USERNAME => $USER | DGN FILE => $REQUEST | RELATIVE BORDER SCALE IS IN INCHES 0 1 2 3 | UNIT 0712 | PROJECT NUMBER & PHASE 0413000204

SCHEDULES: (FOR SHEET E-28)

CONDUCTOR AND CONDUIT SCHEDULE

CONDUCTOR SCHEDULE	No. OF CONDUCTORS — CONDUIT RUN NUMBER 1	2	3	4	5	6	7	8
No. 14 CONDUCTORS								
Ø1			3	3	3	3	3	3
Ø2			3	3	3	3		
Ø6	3	3	6	3	3	3	3	3
Ø8	3	3	6	3	3	3	3	3
ØOLA	5	5	10	5				
Ø2P			2	2	2	2		
APS Ø2P			2	2	2			
PEU								
SPARES	3	3	6	3	3	3	3	3
TOTAL No. 14	14	14	38	24	19	17	12	12
No. 10 CONDUCTORS								
IISNS	2	2		2	2	2	2	2
TOTAL No. 10	2	2		2	2	2	2	2
No. 8 CONDUCTORS								
LIGHTING	2	2		2	2	2	2	2
SIGNAL NEUTRAL	1	1	2	1	1	1	1	1
GROUND	1	1	1	1	1	1	1	1
TOTAL No. 8	4	4	3	4	4	4	4	4
DETECTOR CABLES (DLC)								
6J2U	1	1	1					
6J2L	1	1	1					
6J3U	1	1	1					
8J6U			1	1				
8J6L			1	1				
8J7U			1	1				
8J7L			1	1				
TOTAL DETECTOR CABLES	3	3	7	4				
THERMAL VEHICLE DETECTION CABLE	1	1	4	2	2	2	1	1
THERMAL PEDESTRIAN DETECTION CABLE			2	2	1			
GPS EVUC			1					
CONDUIT SIZE (INCHES)	3	3	2-4"	4	4	3	3	3
NEW/EXISTING CONDUIT	N	N	N	N	N	N	N	N
% FILL	15	15	13	14	11	16	11	11

FOR NOTES, ABBREVIATIONS, SYMBOLS AND LEGEND, SEE SHEETS E-1 TO E-4

POLE AND EQUIPMENT SCHEDULE

No.	STANDARD TYPE	SMA (FEET)	LMA (FEET)	VEHICLE SIGNAL MOUNTING MAST● ARM	VEHICLE SIGNAL MOUNTING POLE	PEDESTRIAN SIGNAL MOUNTING	APS Ø	APS ARROW	LED▼ LUMINAIRE (WATT)	REMARKS *
(A)+	29-5-100	45◆	15	MAS MAS MAS	SV-2-TB				108	INSTALL RED LIGHT ENFORCEMENT UNITS FOR Ø6 AND Ø8. [IS] R73-3(CA). [32] [33] [34]
(B)+	19-4-100	25	15	MAS-4B	SV-2-TB				108	[IS] R73-6(CA). [34] [170]
(C)	26-4-100	45	15	MAS MAS	SV-1-T	SP-1-T			108	INSTALL RED LIGHT ENFORCEMENT UNIT FOR Ø2. INSTALL PEU ON TOP OF POLE. [IS] R3-18. [30] [32] [34]
(D)	15TS		15		SV-1-T		2P	→	108	[37]
(E)	15TS		15				2P	←	108	[37]
(F)	CCTV 40									[35]
(G)	15TS		15		SV-2-TA	SP-1-T			108	
(H)	15TS									INSTALL THERMAL VEHICLE DETECTION CAMERA TO POLE.

*OTHER REQUIREMENTS ARE COVERED BY NOTES, LEGEND, SPECIAL PROVISIONS AND STANDARD SPECIFICATIONS. FOR TYPE OF STANDARD, VEHICLE AND PEDESTRIAN SIGNAL MOUNTING, SEE STANDARD PLANS.

● INSTALL ASTRO-BRAC MOUNTING, OR APPROVED EQUAL, PER CITY STANDARD.

◆ INSTALL SHORTER SMA.

▼ INSTALL 108 W LED PHILIPS ROADFOCUS LUMINAIRE (MODEL No. RFM-108W32LED4K-G2-R3M-UNV-DMG-RCD7-SP2-API-GY3) OR APPROVED EQUAL.

+ INSTALL TRAFFIC SIGNAL POLE BEHIND BARRIER.

LED INTERNALLY ILLUMINATED STREET NAME SIGN SCHEDULE

No.	FONT	PANEL SIZE	LETTER SIZE	PANEL FACING	MESSAGE
(A)	FHWA SERIES E	96"	8" U.C. 6" L.C.	SOUTH	US 101 North ➡
				NORTH	⬅ US 101 North
(B)	FHWA SERIES E	96"	8" U.C. 6" L.C.	EAST	N. Mathilda
(C)	FHWA SERIES E	96"	8" U.C. 6" L.C.	SOUTH	US 101 North ➡
				NORTH	⬅ US 101 North

PROPOSED

Dist	COUNTY	ROUTE	POST MILES TOTAL PROJECT	SHEET No.	TOTAL SHEETS
04	SCL	101,237	45.2/45.8, 2.7/3.3	410	736

6-13-18
REGISTERED CIVIL ENGINEER — DATE

KIN Y. CHAN No. 55391 Exp. 12/31/18 CIVIL — REGISTERED PROFESSIONAL ENGINEER — STATE OF CALIFORNIA

6-20-18
PLANS APPROVAL DATE

THE STATE OF CALIFORNIA OR ITS OFFICERS OR AGENTS SHALL NOT BE RESPONSIBLE FOR THE ACCURACY OR COMPLETENESS OF SCANNED COPIES OF THIS PLAN SHEET.

Y&C TRANSPORTATION CONSULTANTS, INC.
3250 Ramos Circle
Sacramento, CA 95827

VTA
3331 N First St
Building B
San Jose, CA 95134

SIGNAL AND LIGHTING (CITY STREET LOCATION 3)

E-29

REVISED BY | DATE REVISED
MENG YANG | DAN YAU
CALCULATED-DESIGNED BY | CHECKED BY
CONSULTANT FUNCTIONAL SUPERVISOR: TIMOTHY J. LEE
STATE OF CALIFORNIA - DEPARTMENT OF TRANSPORTATION — Caltrans

LAST REVISION 00-00-00 | DATE PLOTTED => $DATE | TIME PLOTTED => $TIME

BORDER LAST REVISED 7/2/2010 | USERNAME => $USER | DGN FILE => $REQUEST | RELATIVE BORDER SCALE IS IN INCHES 0 1 2 3 | UNIT 0712 | PROJECT NUMBER & PHASE 0413000204

NOTE:

FOR ACCURATE RIGHT OF WAY DATA, CONTACT RIGHT OF WAY ENGINEERING AT THE DISTRICT OFFICE.

	EQUIPMENT TO BE REMOVED AND SALVAGED TO CITY				
LOCATION	THERMAL Veh DETECTION CAMERA	CCTV CAMERA	GPS EVUD	SERVICE EQUIPMENT ENCLOSURE	CONTROLLER ASSEMBLY AND CABINET
(a)	1				
(c)	1				
(d)		1	1		
(f)	1				
(h)	1				
OTHER				4	4
TOTAL	4	1	1	4	4

Dist	COUNTY	ROUTE	POST MILES TOTAL PROJECT	SHEET No.	TOTAL SHEETS
04	SCL	101,237	45.2/45.8, 2.7/3.3	411	736

6-13-18
REGISTERED CIVIL ENGINEER DATE

6-20-18
PLANS APPROVAL DATE

REGISTERED PROFESSIONAL ENGINEER
KIN Y. CHAN
No. 55391
Exp. 12/31/18
CIVIL
STATE OF CALIFORNIA

THE STATE OF CALIFORNIA OR ITS OFFICERS OR AGENTS SHALL NOT BE RESPONSIBLE FOR THE ACCURACY OR COMPLETENESS OF SCANNED COPIES OF THIS PLAN SHEET.

Y&C TRANSPORTATION CONSULTANTS, INC.
3250 Ramos Circle
Sacramento, CA 95827

VTA
3331 N First St
Building B
San Jose, CA 95134

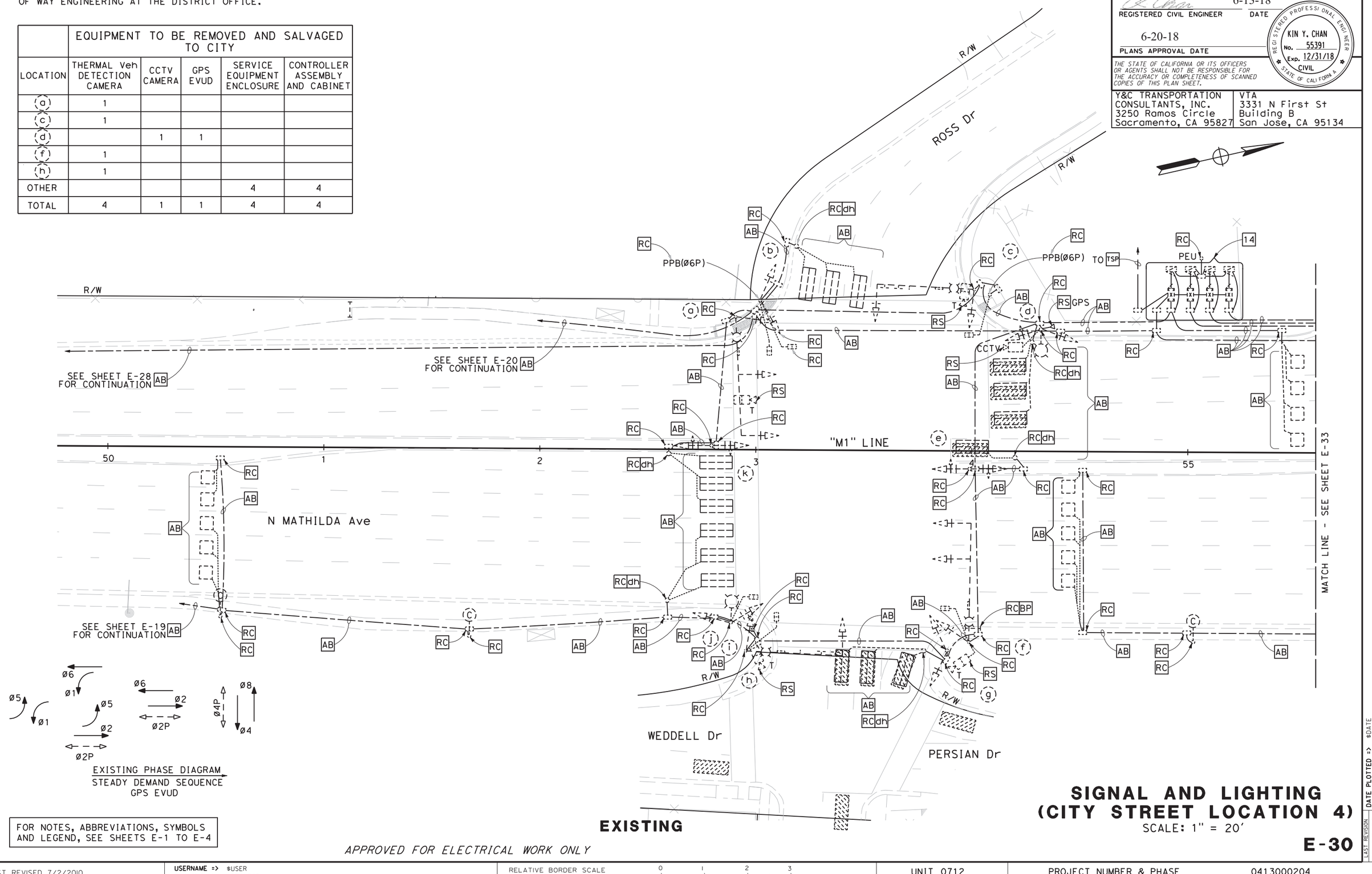

EXISTING PHASE DIAGRAM
STEADY DEMAND SEQUENCE
GPS EVUD

FOR NOTES, ABBREVIATIONS, SYMBOLS AND LEGEND, SEE SHEETS E-1 TO E-4

EXISTING

APPROVED FOR ELECTRICAL WORK ONLY

SIGNAL AND LIGHTING (CITY STREET LOCATION 4)

SCALE: 1" = 20'

E-30

STATE OF CALIFORNIA - DEPARTMENT OF TRANSPORTATION
CONSULTANT FUNCTIONAL SUPERVISOR: TIMOTHY J. LEE
CALCULATED-DESIGNED BY: MENG YANG
CHECKED BY: DAN YAU
REVISED BY / DATE REVISED
Caltrans

BORDER LAST REVISED 7/2/2010
USERNAME => $USER
DGN FILE => $REQUEST
RELATIVE BORDER SCALE IS IN INCHES 0 1 2 3
UNIT 0712
PROJECT NUMBER & PHASE 0413000204
LAST REVISION 00-00-00
DATE PLOTTED => $DATE
TIME PLOTTED => $TIME

Dist	COUNTY	ROUTE	POST MILES TOTAL PROJECT	SHEET No.	TOTAL SHEETS
04	SCL	101,237	45.2/45.8, 2.7/3.3	412	736

6-13-18
REGISTERED CIVIL ENGINEER DATE

KIN Y. CHAN
No. 55391
Exp. 12/31/18
CIVIL
STATE OF CALIFORNIA

6-20-18
PLANS APPROVAL DATE

THE STATE OF CALIFORNIA OR ITS OFFICERS OR AGENTS SHALL NOT BE RESPONSIBLE FOR THE ACCURACY OR COMPLETENESS OF SCANNED COPIES OF THIS PLAN SHEET.

Y&C TRANSPORTATION CONSULTANTS, INC.
3250 Ramos Circle
Sacramento, CA 95827

VTA
3331 N First St
Building B
San Jose, CA 95134

NOTES:

1. FOR ACCURATE RIGHT OF WAY DATA, CONTACT RIGHT OF WAY ENGINEERING AT THE DISTRICT OFFICE.
2. FOR SCHEDULES, SEE SHEET E-32.

Exist PG&E SERVICE POINT (120/240 V)

Exist LOAD:
33 - 200 W HPS LUMINIAIRES (UNMETERED)
3 - 175 W MER SIGN L†g (UNMETERED)
6 - 70 W SOFFIT LUMINIARES (UNMETERED)
2 - ± 4500 W TRAFFIC SIGNAL (METERED)
2 - ± 2500 W TRAFFIC SIGNAL (METERED)
4 - ± 300 W IISNS (METERED)

MODIFIED LOAD:
8 - 108 W LED LUMINAIRES (UNMETERED)
1 - ±1000 W TRAFFIC SIGNAL (METERED)
4 - ± 55W LED IISNS (METERED)
SEE SHEET E-34 FOR ADDITIONAL LOADING

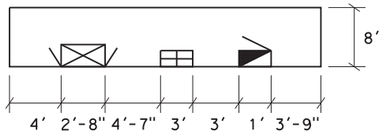

DETAIL A
EQUIPMENT LAYOUT (Typ)
NO SCALE

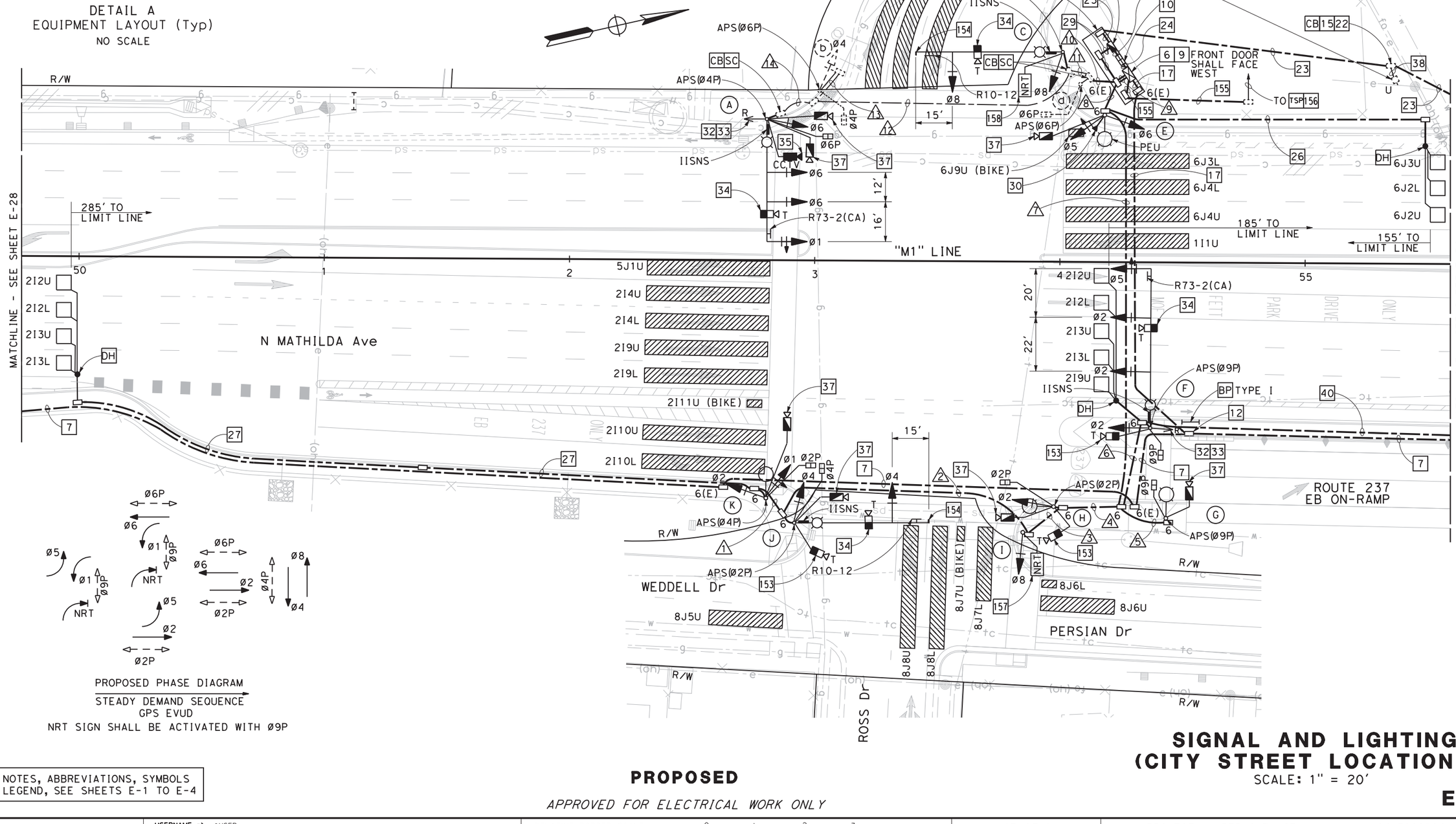

PROPOSED PHASE DIAGRAM
STEADY DEMAND SEQUENCE
GPS EVUD
NRT SIGN SHALL BE ACTIVATED WITH Ø9P

FOR NOTES, ABBREVIATIONS, SYMBOLS AND LEGEND, SEE SHEETS E-1 TO E-4

PROPOSED

APPROVED FOR ELECTRICAL WORK ONLY

SIGNAL AND LIGHTING (CITY STREET LOCATION 4)

SCALE: 1" = 20'

E-31

STATE OF CALIFORNIA - DEPARTMENT OF TRANSPORTATION
CONSULTANT FUNCTIONAL SUPERVISOR: TIMOTHY J.LEE
CALCULATED-DESIGNED BY: MENG YANG
CHECKED BY: DAN YAU
REVISED BY
DATE REVISED
LAST REVISION 00-00-00
DATE PLOTTED => $DATE
TIME PLOTTED => $TIME

BORDER LAST REVISED 7/2/2010 | USERNAME => $USER | DGN FILE => $REQUEST | RELATIVE BORDER SCALE IS IN INCHES 0 1 2 3 | UNIT 0712 | PROJECT NUMBER & PHASE 0413000204

SCHEDULES: (FOR SHEET E-31)

CONDUCTOR AND CONDUIT SCHEDULE

CONDUCTOR SCHEDULE	No. OF CONDUCTORS — CONDUIT RUN NUMBER													
	1	2	3	4	5	6	7	8	9	10	11	12	13	14
No. 14 CONDUCTORS														
Ø1	3	3	3	3			3	3	6	3	3	3		3
Ø2	3	3	3	3		3	6	6	6					
Ø4		3	3	3			3	3	6	3	3	3	3	
Ø5						3	3	3	3					
Ø6								3	6	3	3	3		3
Ø8			3	3			3	3	6	3	3			
Ø2P	2	2	2	2			2	2	2					
Ø4P		2	2	2			2	2	4	2	2	2	2	
Ø6P								2	4	2	2	2		2
Ø9P					2	2	4	4	4					
APS Ø2P		2	2	2			2	2						
APS Ø4P	2	2	2	2			2	2	4	2	2	2		2
APS Ø6P									2	2	2	2		2
APS Ø9P					2	2	4	4	4					
RED LIGHT ENFORCEMENT FOR Ø4						1	1	1	1					
RED LIGHT ENFORCEMENT FOR Ø8									1	1	1	1		1
PEU								3	3					
SPARES	3	3	3	3	3	3	6	6	12	6	6	6	3	3
TOTAL No. 14	13	20	23	23	7	14	41	49	74	27	27	24	8	16
No. 10 CONDUCTORS														
IISNS		2	2	2		2	2	2		2	2	2		2
NRT ACTIVATED BLANK-OUT SIGN			2	2			2	2	4	2	2			
TOTAL No. 10		2	4	4		2	4	4	4	4	4	2		2
No. 8 CONDUCTORS														
LIGHTING	2	2	2	2	2	2	2	2		2	2	2		2
SIGNAL NEUTRAL	1	1	1	1	1	1	1	1	1	1	1	1	1	1
GROUND	1	1	1	1	1	1	1	1	1	1	1	1	1	1
TOTAL No. 8	4	4	4	4	4	4	4	4	2	4	4	4	2	4
DETECTOR CABLES (DLC)														
2I2U	1	1	1	1			1	1	1					
2I2L	1	1	1	1			1	1	1					
2I3U	1	1	1	1			1	1	1					
2I3L	1	1	1	1			1	1	1					
6J2U								1	1					
6J2L								1	1					
6J3U								1	1					
TOTAL DETECTOR CABLES	4	4	4	4			4	7	7					
THERMAL VEHICLE DETECTION CABLE		1	1	1		2	3	3	5	2	2	1		1
THERMAL PEDESTRIAN DETECTION CABLE	1	2	2	3	1		4	5	7	2	2	2		2
CCTV CABLE									1	1	1	1		1
GPS EVUC								1	1					
CONDUIT SIZE (INCHES)	3	4	4	4	3	4	2-4"	2-4"	2-4"	4	3	3	3	2
NEW/EXISTING CONDUIT	N	N	N	N	N	N	N	N	N	N	E	E	E	E
% FILL	16	12	12	13	6	9	11	13	18	14	24	18	4	35

NOTES: ALL EXISTING CONDUCTOR(S)/CABLE(S) SHALL BE REMOVED FROM EXISTING CONDUITS. INSTALL NEW CONDUCTOR(S)/CABLE(S) IN NEW AND EXISTING CONDUITS.

FOR NOTES, ABBREVIATIONS, SYMBOLS AND LEGEND, SEE SHEETS E-1 TO E-4

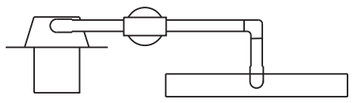

DETAIL A
TV-2-T (Mod)

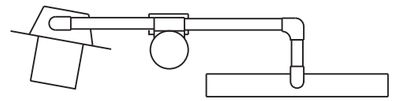

DETAIL B
SV-2-T (Mod)

POLE AND EQUIPMENT SCHEDULE

No.	STANDARD TYPE	STANDARD SMA (FEET)	STANDARD LMA (FEET)	VEHICLE SIGNAL MOUNTING MAST● ARM	VEHICLE SIGNAL MOUNTING POLE	PEDESTRIAN SIGNAL MOUNTING	APS Ø	APS ARROW	LED▼ LUMINAIRE (WATT)	REMARKS *
(A)	29-5-100	50	15	MAS MAS MAS	SV-1-T	SP-1-T	4P	←	108	INSTALL RED LIGHT ENFORCEMENT UNIT FOR Ø6 AND Ø8. IS R73-2(CA). 32 33 34 35 37
(b)	Exist 1-B				TV-1-T+	SP-1-T+	6P +	→		
(C)	61-5-100	60	15	MAS	SV-2-T◆ (Mod)				108	IS R10-12. 31 34 154 158
(d)	Exist 1-B					TP-1-T	6P +	←		
(E)	15TS		15		SV-2-TA				108	INSTALL PEU ON TOP OF POLE. 30 37
(F)	61-5-100	65	15	MAS MAS MAS	SV-1-T	SP-1-T	9P	←	108	INSTALL RED LIGHT ENFORCEMENT UNIT FOR Ø2 AND Ø4. IS R73-2(CA). 32 33 34 153
(G)	15TS		15			SP-1-T	9P	←	108	37
(H)	15TS		15		SV-1-T	SP-1-T	2P	←	108	37 153
(I)	1-B				TV-2-T■ (MOD)					157
(J)	29-5-100	55	15	MAS	SV-1-T	SP-1-T	2P	←	108	IS R10-12. 34 37 153 154
(K)	15TS		15		SV-2-TA	SP-1-T	4P	→	108	37

*OTHER REQUIREMENTS ARE COVERED BY NOTES, LEGEND, SPECIAL PROVISIONS AND STANDARD SPECIFICATIONS. FOR TYPE OF STANDARD, VEHICLE AND PEDESTRIAN SIGNAL MOUNTING, SEE STANDARD PLANS.

● INSTALL ASTRO-BRAC MOUNTING, OR APPROVED EQUAL, PER CITY'S STANDARD.

■ SEE MOUNTING DETAIL A ON THIS SHEET.

◆ SEE MOUNTING DETAIL B ON THIS SHEET.

▼ INSTALL 108 W LED PHILIPS ROADFOCUS LUMINAIRE (MODEL No. RFM-108W32LED4K-G2-R3M-UNV-DMG-RCD7-SP2-API-GY3) OR APPROVED EQUAL.

+ ADD EQUIPMENT TO Exist STANDARD.

LED INTERNALLY ILLUMINATED STREET NAME SIGN SCHEDULE

No.	FONT	PANEL SIZE	LETTER SIZE	PANEL FACING	MESSAGE
(A)	FHWA SERIES E	72"	8" U.C. 6" L.C.	BOTH	Ross
(C)	FHWA SERIES E	96"	8" U.C. 6" L.C.	BOTH	N. Mathilda
(F)	FHWA SERIES E	72"	8" U.C. 6" L.C.	BOTH	Ross
(J)	FHWA SERIES E	96"	8" U.C. 6" L.C.	BOTH	N. Mathilda

PROPOSED

Dist	COUNTY	ROUTE	POST MILES TOTAL PROJECT	SHEET No.	TOTAL SHEETS
04	SCL	101,237	45.2/45.8, 2.7/3.3	413	736

6-13-18
REGISTERED CIVIL ENGINEER — DATE

KIN Y. CHAN
No. 55391
Exp. 12/31/18
CIVIL
REGISTERED PROFESSIONAL ENGINEER
STATE OF CALIFORNIA

6-20-18
PLANS APPROVAL DATE

THE STATE OF CALIFORNIA OR ITS OFFICERS OR AGENTS SHALL NOT BE RESPONSIBLE FOR THE ACCURACY OR COMPLETENESS OF SCANNED COPIES OF THIS PLAN SHEET.

Y&C TRANSPORTATION CONSULTANTS, INC.
3250 Ramos Circle
Sacramento, CA 95827

VTA
3331 N First St
Building B
San Jose, CA 95134

REVISED BY | DATE REVISED
MENG YANG | DAN YAU
CALCULATED-DESIGNED BY | CHECKED BY
CONSULTANT FUNCTIONAL SUPERVISOR: TIMOTHY J.LEE
STATE OF CALIFORNIA - DEPARTMENT OF TRANSPORTATION

SIGNAL AND LIGHTING (CITY STREET LOCATION 4)

E-32

LAST REVISION 00-00-00 | DATE PLOTTED => $DATE | TIME PLOTTED => $TIME

BORDER LAST REVISED 7/2/2010 | USERNAME => $USER | DGN FILE => $REQUEST | RELATIVE BORDER SCALE IS IN INCHES 0 1 2 3 | UNIT 0712 | PROJECT NUMBER & PHASE 0413000204

NOTE:

FOR ACCURATE RIGHT OF WAY DATA, CONTACT
RIGHT OF WAY ENGINEERING AT THE DISTRICT OFFICE.

Dist	COUNTY	ROUTE	POST MILES TOTAL PROJECT	SHEET No.	TOTAL SHEETS
04	SCL	101,237	45.2/45.8, 2.7/3.3	414	736

6-13-18
REGISTERED CIVIL ENGINEER DATE

6-20-18
PLANS APPROVAL DATE

REGISTERED PROFESSIONAL ENGINEER
KIN Y. CHAN
No. 55391
Exp. 12/31/18
CIVIL
STATE OF CALIFORNIA

THE STATE OF CALIFORNIA OR ITS OFFICERS OR AGENTS SHALL NOT BE RESPONSIBLE FOR THE ACCURACY OR COMPLETENESS OF SCANNED COPIES OF THIS PLAN SHEET.

Y&C TRANSPORTATION CONSULTANTS, INC.
3250 Ramos Circle
Sacramento, CA 95827

VTA
3331 N First St
Building B
San Jose, CA 95134

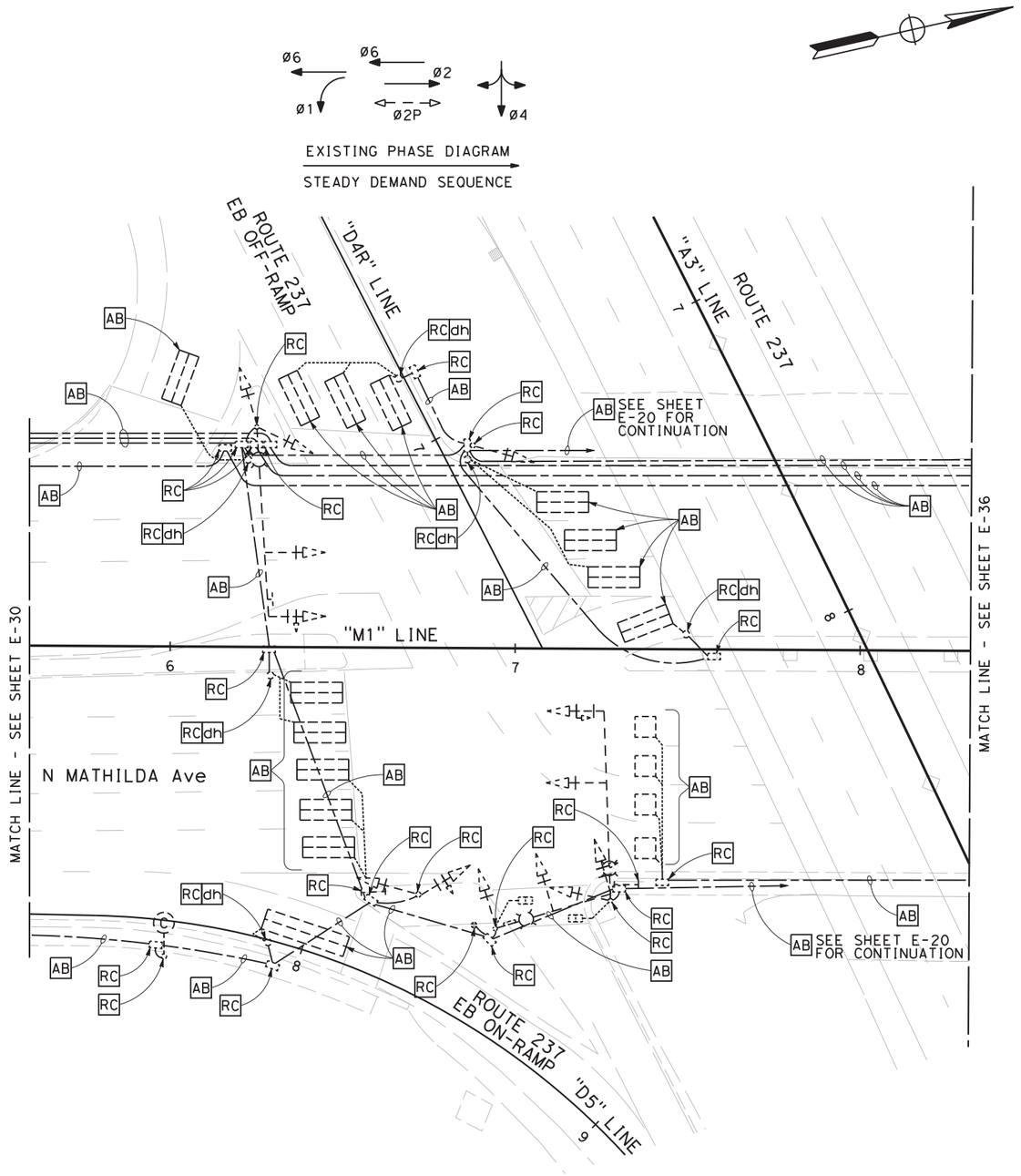

FOR NOTES, ABBREVIATIONS, SYMBOLS AND LEGEND, SEE SHEETS E-1 TO E-4

EXISTING SIGNAL TO BE REMOVED

APPROVED FOR ELECTRICAL WORK ONLY

SIGNAL AND LIGHTING (CITY STREET LOCATION 5)

SCALE: 1" = 20'

E-33

REVISED BY	
DATE REVISED	
CALCULATED-DESIGNED BY	MENG YANG
CHECKED BY	DAN YAU
CONSULTANT FUNCTIONAL SUPERVISOR	TIMOTHY J. LEE

STATE OF CALIFORNIA - DEPARTMENT OF TRANSPORTATION
Caltrans

LAST REVISION 00-00-00
DATE PLOTTED => $DATE
TIME PLOTTED => $TIME

BORDER LAST REVISED 7/2/2010
USERNAME => $USER
DGN FILE => $REQUEST
RELATIVE BORDER SCALE IS IN INCHES 0 1 2 3
UNIT 0712
PROJECT NUMBER & PHASE 0413000204

NOTES:

1. FOR ACCURATE RIGHT OF WAY DATA, CONTACT RIGHT OF WAY ENGINEERING AT THE DISTRICT OFFICE.
2. FOR SCHEDULES, SEE SHEET E-35.

Dist	COUNTY	ROUTE	POST MILES TOTAL PROJECT	SHEET No.	TOTAL SHEETS
04	SCL	101,237	45.2/45.8, 2.7/3.3	415	736

6-13-18
REGISTERED CIVIL ENGINEER — DATE

KIN Y. CHAN
No. 55391
Exp. 12/31/18
CIVIL
REGISTERED PROFESSIONAL ENGINEER
STATE OF CALIFORNIA

6-20-18
PLANS APPROVAL DATE

THE STATE OF CALIFORNIA OR ITS OFFICERS OR AGENTS SHALL NOT BE RESPONSIBLE FOR THE ACCURACY OR COMPLETENESS OF SCANNED COPIES OF THIS PLAN SHEET.

Y&C TRANSPORTATION CONSULTANTS, INC. 3250 Ramos Circle Sacramento, CA 95827	VTA 3331 N First St Building B San Jose, CA 95134

ø6 ø6 ø2 ø1 ø2P ø4

PROPOSED PHASE DIAGRAM

STEADY DEMAND SEQUENCE
GPS EVUD

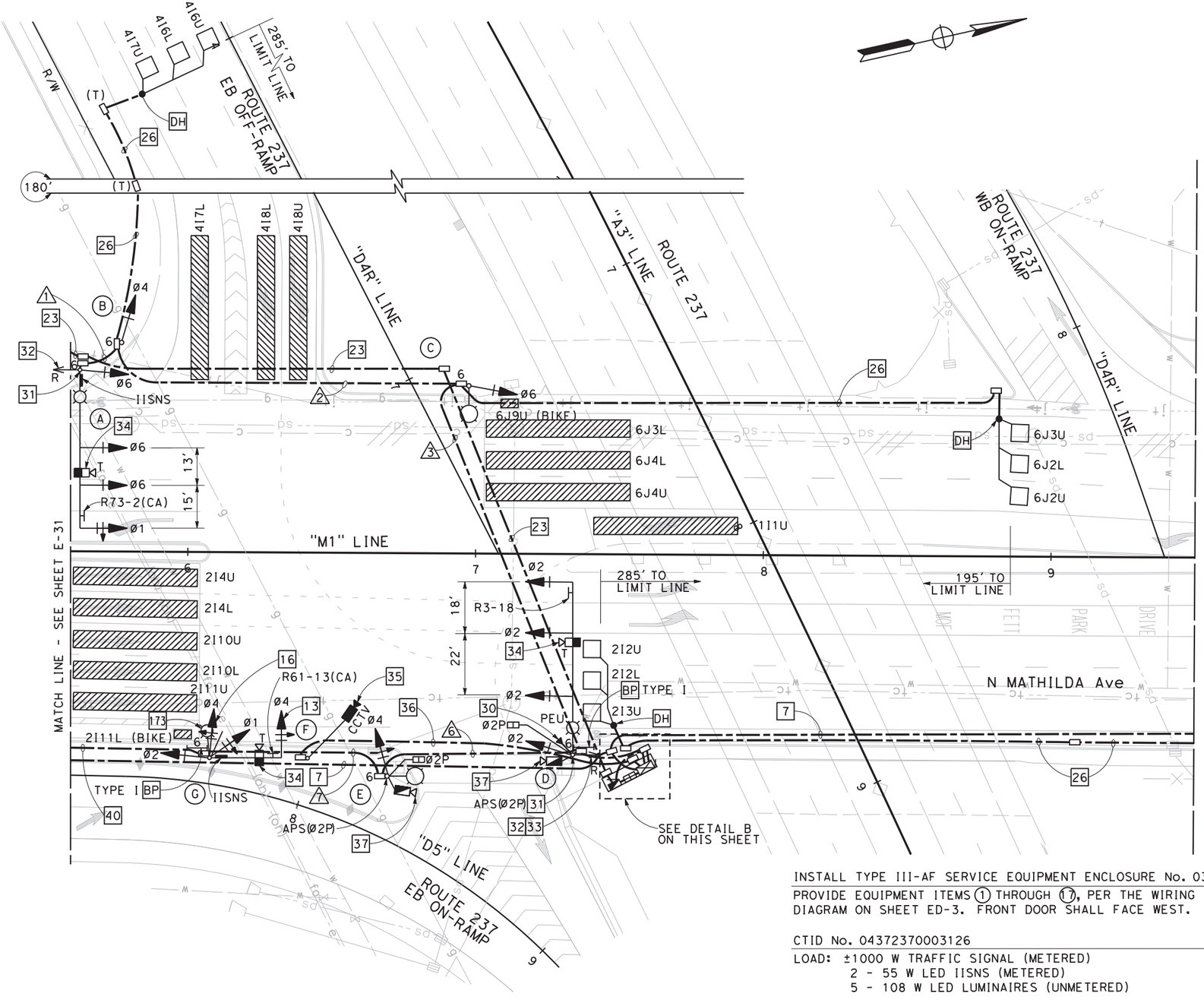

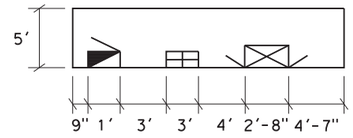

DETAIL A
EQUIPMENT LAYOUT (Typ)
NO SCALE

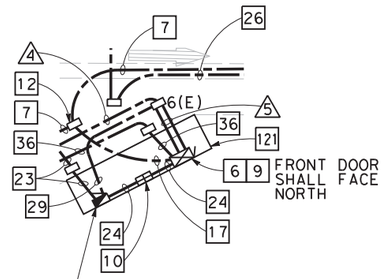

DETAIL B
SCALE: 1" = 10'

INSTALL TYPE III-AF SERVICE EQUIPMENT ENCLOSURE No. 03126

PROVIDE EQUIPMENT ITEMS (1) THROUGH (17), PER THE WIRING DIAGRAM ON SHEET ED-3. FRONT DOOR SHALL FACE WEST.

CTID No. 04372370003126

LOAD: ±1000 W TRAFFIC SIGNAL (METERED)
2 - 55 W LED IISNS (METERED)
5 - 108 W LED LUMINAIRES (UNMETERED)

FOR NOTES, ABBREVIATIONS, SYMBOLS AND LEGEND, SEE SHEETS E-1 TO E-4

PROPOSED

APPROVED FOR ELECTRICAL WORK ONLY

SIGNAL AND LIGHTING (CITY STREET LOCATION 5)

SCALE: 1" = 20'

E-34

STATE OF CALIFORNIA - DEPARTMENT OF TRANSPORTATION
CONSULTANT FUNCTIONAL SUPERVISOR: TIMOTHY J. LEE
CALCULATED-DESIGNED BY: MENG YANG
CHECKED BY: DAN YAU
REVISED BY / DATE REVISED

LAST REVISION 00-00-00
DATE PLOTTED => $DATE
TIME PLOTTED => $TIME

BORDER LAST REVISED 7/2/2010
USERNAME => $USER
DGN FILE => $REQUEST
RELATIVE BORDER SCALE IS IN INCHES 0 1 2 3
UNIT 0712
PROJECT NUMBER & PHASE 0413000204

Dist	COUNTY	ROUTE	POST MILES TOTAL PROJECT	SHEET No.	TOTAL SHEETS
04	SCL	101,237	45.2/45.8, 2.7/3.3	416	736

6-13-18
REGISTERED CIVIL ENGINEER — DATE

6-20-18
PLANS APPROVAL DATE

REGISTERED PROFESSIONAL ENGINEER
KIN Y. CHAN
No. 55391
Exp. 12/31/18
CIVIL
STATE OF CALIFORNIA

THE STATE OF CALIFORNIA OR ITS OFFICERS OR AGENTS SHALL NOT BE RESPONSIBLE FOR THE ACCURACY OR COMPLETENESS OF SCANNED COPIES OF THIS PLAN SHEET.

Y&C TRANSPORTATION CONSULTANTS, INC. 3250 Ramos Circle Sacramento, CA 95827	VTA 3331 N First St Building B San Jose, CA 95134

SCHEDULES: (FOR SHEET E-34)

CONDUCTOR AND CONDUIT SCHEDULE

CONDUCTOR SCHEDULE	No. OF CONDUCTORS IN CONDUIT RUN NUMBER 1	2	3	4	5	6	7
No. 14 CONDUCTORS							
Ø1	3	3	3	6	6	3	3
Ø2				3	3	3	3
Ø4		3	3	6	6	3	3
Ø6	3	3	3	3	3		
Ø2P				2	2	2	
APS Ø2P				2	2	2	
PEU				3			
SPARES	3	3	3	6	6	3	3
TOTAL No. 14	9	12	12	31	28	16	12
No. 10 CONDUCTORS							
IISNS	2	2	2	2		2	2
TOTAL No. 10	2	2	2	2		2	2
No. 8 CONDUCTORS							
LIGHTING	2	2	2	2		2	2
SIGNAL NEUTRAL	1	1	1	2	2	1	1
GROUND	1	1	1	1	1	1	1
TOTAL No. 8	4	4	4	5	3	4	4
DETECTOR CABLES (DLC)							
2I2U				1	1	1	1
2I2L				1	1	1	1
2I3U				1	1	1	1
2I3L				1	1	1	1
2I9U				1	1	1	1
4I6U		1	1	1	1		
4I6L		1	1	1	1		
4I7U		1	1	1	1		
6J2U			1	1	1		
6J2L			1	1	1		
6J3U			1	1	1		
TOTAL DETECTOR CABLES		3	6	11	11	5	5
THERMAL VEHICLE DETECTION CABLE	1	1	1	3	3	1	1
THERMAL PEDESTRIAN DETECTION CABLE				2	2	1	
GPS EVUC				1	1		
CONDUIT SIZE (INCHES)	3	3	3	2-4"	2-4"	3	3
NEW/EXISTING CONDUIT	N	N	N	N	N	N	N
% FILL	10	14	17	14	13	18	16

POLE AND EQUIPMENT SCHEDULE

No.	STANDARD TYPE	SMA (FEET)	LMA (FEET)	VEHICLE SIGNAL MOUNTING MAST● ARM	POLE	PEDESTRIAN SIGNAL MOUNTING	APS Ø	APS ARROW	LED▼ LUMINAIRE (WATT)	REMARKS *
(A)	29-5-100	55	15	MAS MAS MAS	SV-1-T				108	INSTALL RED LIGHT ENFORCEMENT UNITS FOR Ø6. IS R73-2(CA). 31 32 34
(B)	1-B				TV-1-T					
(C)	15TS		15		SV-1-T				108	
(D)	61-5-100	60	15	MAS MAS MAS	SV-1-T	SP-1-T	2P	←	108	INSTALL RED LIGHT ENFORCEMENT UNITS FOR Ø2 AND Ø4. INSTALL PEU ON TOP OF POLE. IS R3-18(CA). 30 31 32 33 34 37
(E)	15TS		12		SV-1-T	SP-1-T	2P	←	108	37
(F)	CCTV 40									35
(G)	19-4-100	25	15	MAS-4B	SV-3-TB				108	IS R61-13(CA). 13 16 34 173

*OTHER REQUIREMENTS ARE COVERED BY NOTES, LEGEND, SPECIAL PROVISIONS AND STANDARD SPECIFICATIONS. FOR TYPE OF STANDARD, VEHICLE AND PEDESTRIAN SIGNAL MOUNTING, SEE STANDARD PLANS.

● INSTALL ASTRO-BRAC MOUNTING, OR APPROVED EQUAL, PER CITY'S STANDARD.

▼ INSTALL 108 W LED PHILIPS ROADFOCUS LUMINAIRE (MODEL No. RFM-108W32LED4K-G2-R3M-UNV-DMG-RCD7-SP2-API-GY3) OR APPROVED EQUAL.

LED INTERNALLY ILLUMINATED STREET NAME SIGN SCHEDULE

No.	FONT	PANEL SIZE	LETTER SIZE	PANEL FACING	MESSAGE
(A)	FHWA SERIES E	96"	8" U.C. 6" L.C.	NORTH	←SR 237 East
(G)	FHWA SERIES E	96"	8" U.C. 6" L.C.	WEST	N. Mathilda

FOR NOTES, ABBREVIATIONS, SYMBOLS AND LEGEND, SEE SHEETS E-1 TO E-4

PROPOSED

SIGNAL AND LIGHTING (CITY STREET LOCATION 5)

E-35

REVISED BY | DATE REVISED
MENG YANG | DAN YAU
CALCULATED-DESIGNED BY | CHECKED BY
CONSULTANT FUNCTIONAL SUPERVISOR: TIMOTHY J. LEE
STATE OF CALIFORNIA - DEPARTMENT OF TRANSPORTATION
Caltrans

LAST REVISION 00-00-00 | DATE PLOTTED => $DATE | TIME PLOTTED => $TIME

BORDER LAST REVISED 7/2/2010 | USERNAME => $USER | DGN FILE => $REQUEST | RELATIVE BORDER SCALE IS IN INCHES 0 1 2 3 | UNIT 0712 | PROJECT NUMBER & PHASE 0413000204

NOTE:

FOR ACCURATE RIGHT OF WAY DATA, CONTACT
RIGHT OF WAY ENGINEERING AT THE DISTRICT OFFICE.

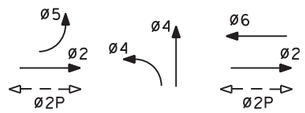

EXISTING PHASE DIAGRAM
STEADY DEMAND SEQUENCE

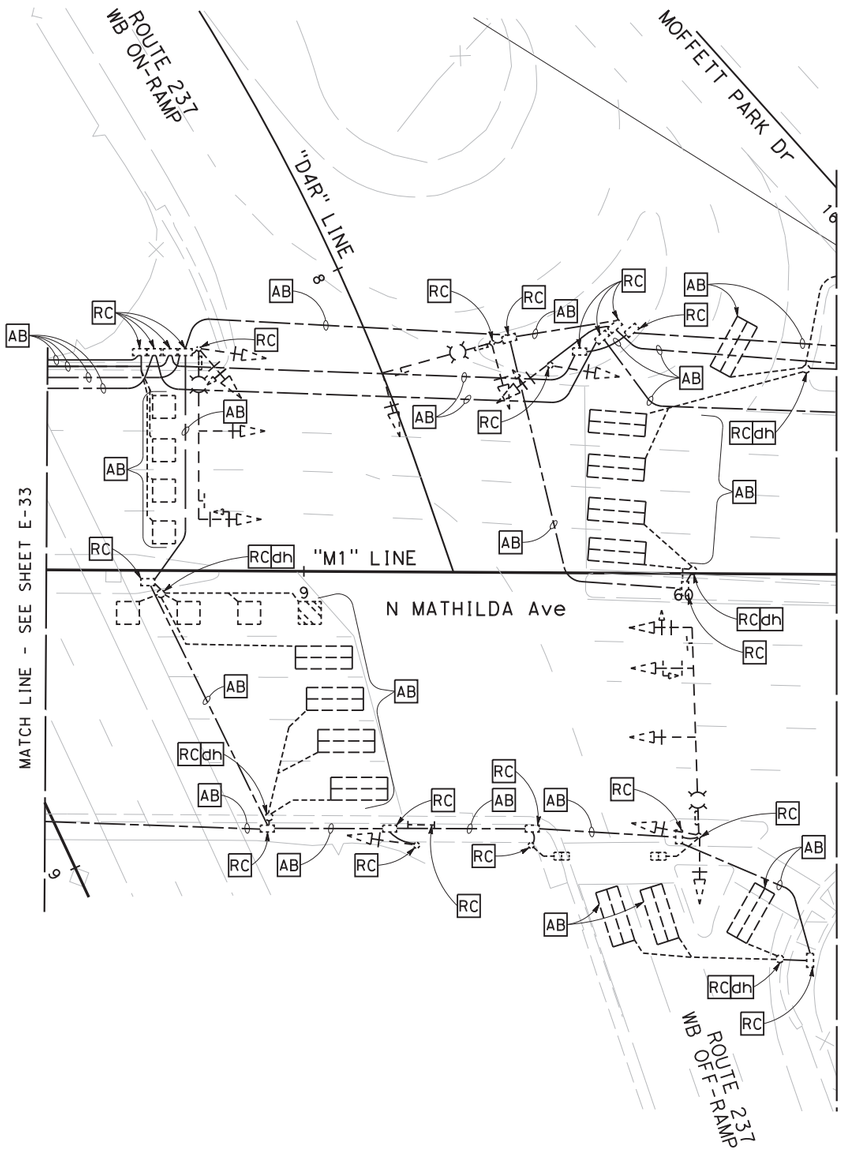

FOR NOTES, ABBREVIATIONS, SYMBOLS AND LEGEND, SEE SHEETS E-1 TO E-4

EXISTING SIGNAL TO BE REMOVED

APPROVED FOR ELECTRICAL WORK ONLY

SIGNAL AND LIGHTING (CITY STREET LOCATION 6)

SCALE: 1" = 20'

E-36

Dist	COUNTY	ROUTE	POST MILES TOTAL PROJECT	SHEET No.	TOTAL SHEETS
04	SCL	101,237	45.2/45.8, 2.7/3.3	417	736

6-13-18
REGISTERED CIVIL ENGINEER — DATE

REGISTERED PROFESSIONAL ENGINEER
KIN Y. CHAN
No. 55391
Exp. 12/31/18
CIVIL
STATE OF CALIFORNIA

6-20-18
PLANS APPROVAL DATE

THE STATE OF CALIFORNIA OR ITS OFFICERS OR AGENTS SHALL NOT BE RESPONSIBLE FOR THE ACCURACY OR COMPLETENESS OF SCANNED COPIES OF THIS PLAN SHEET.

Y&C TRANSPORTATION CONSULTANTS, INC. 3250 Ramos Circle Sacramento, CA 95827	VTA 3331 N First St Building B San Jose, CA 95134

REVISED BY	DATE REVISED

CALCULATED-DESIGNED BY: MENG YANG
CHECKED BY: DAN YAU
CONSULTANT FUNCTIONAL SUPERVISOR: TIMOTHY J. LEE

STATE OF CALIFORNIA - DEPARTMENT OF TRANSPORTATION
Caltrans

LAST REVISION 00-00-00
DATE PLOTTED => $DATE
TIME PLOTTED => $TIME

BORDER LAST REVISED 7/2/2010
USERNAME => $USER
DGN FILE => $REQUEST
RELATIVE BORDER SCALE IS IN INCHES 0 1 2 3
UNIT 0712
PROJECT NUMBER & PHASE 0413000204

NOTE:

FOR ACCURATE RIGHT OF WAY DATA, CONTACT
RIGHT OF WAY ENGINEERING AT THE DISTRICT OFFICE.

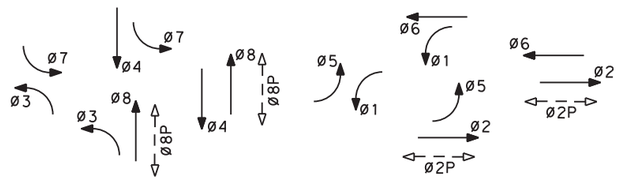

EXISTING PHASE DIAGRAM

STEADY DEMAND SEQUENCE

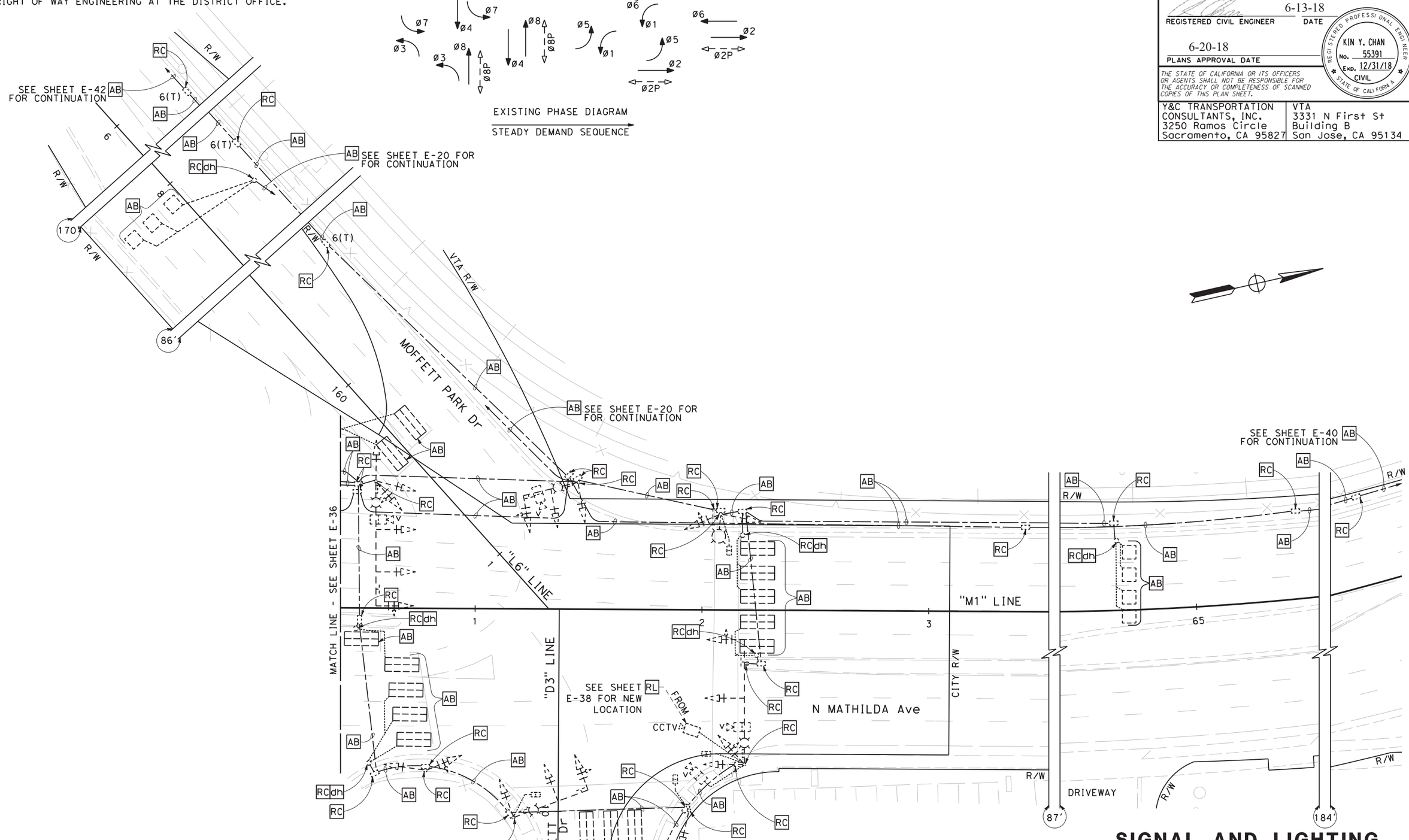

SIGNAL AND LIGHTING (CITY STREET LOCATION 7)

SCALE: 1" = 20'

EXISTING

APPROVED FOR ELECTRICAL WORK ONLY

E-37

FOR NOTES, ABBREVIATIONS, SYMBOLS AND LEGEND, SEE SHEETS E-1 TO E-4

Dist	COUNTY	ROUTE	POST MILES TOTAL PROJECT	SHEET No.	TOTAL SHEETS
04	SCL	101,237	45.2/45.8, 2.7/3.3	418	736

6-13-18
REGISTERED CIVIL ENGINEER — DATE

KIN Y. CHAN
No. 55391
Exp. 12/31/18
CIVIL
REGISTERED PROFESSIONAL ENGINEER
STATE OF CALIFORNIA

6-20-18
PLANS APPROVAL DATE

THE STATE OF CALIFORNIA OR ITS OFFICERS OR AGENTS SHALL NOT BE RESPONSIBLE FOR THE ACCURACY OR COMPLETENESS OF SCANNED COPIES OF THIS PLAN SHEET.

Y&C TRANSPORTATION CONSULTANTS, INC.
3250 Ramos Circle
Sacramento, CA 95827

VTA
3331 N First St
Building B
San Jose, CA 95134

CALCULATED-DESIGNED BY: MENG YANG
CHECKED BY: DAN YAU
REVISED BY / DATE REVISED
CONSULTANT FUNCTIONAL SUPERVISOR: TIMOTHY J. LEE
STATE OF CALIFORNIA - DEPARTMENT OF TRANSPORTATION
Caltrans

LAST REVISION: 00-00-00
DATE PLOTTED => $DATE
TIME PLOTTED => $TIME

BORDER LAST REVISED 7/2/2010
USERNAME => $USER
DGN FILE => $REQUEST
RELATIVE BORDER SCALE IS IN INCHES 0 1 2 3
UNIT 0712
PROJECT NUMBER & PHASE 0413000204

NOTES:

1. FOR ACCURATE RIGHT OF WAY DATA, CONTACT RIGHT OF WAY ENGINEERING AT THE DISTRICT OFFICE.
2. FOR SCHEDULES, SEE SHEET E-39.

Dist	COUNTY	ROUTE	POST MILES TOTAL PROJECT	SHEET No.	TOTAL SHEETS
04	SCL	101,237	45.2/45.8, 2.7/3.3	419	736

6-13-18
REGISTERED CIVIL ENGINEER — DATE

KIN Y. CHAN
No. 55391
Exp. 12/31/18
CIVIL
REGISTERED PROFESSIONAL ENGINEER
STATE OF CALIFORNIA

6-20-18
PLANS APPROVAL DATE

THE STATE OF CALIFORNIA OR ITS OFFICERS OR AGENTS SHALL NOT BE RESPONSIBLE FOR THE ACCURACY OR COMPLETENESS OF SCANNED COPIES OF THIS PLAN SHEET.

Y&C TRANSPORTATION CONSULTANTS, INC. 3250 Ramos Circle Sacramento, CA 95827	VTA 3331 N First St Building B San Jose, CA 95134

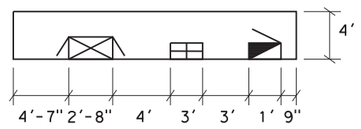

DETAIL A
EQUIPMENT LAYOUT (Typ)
NO SCALE

PROPOSED PHASE DIAGRAM
STEADY DEMAND SEQUENCE
GPS EVUD

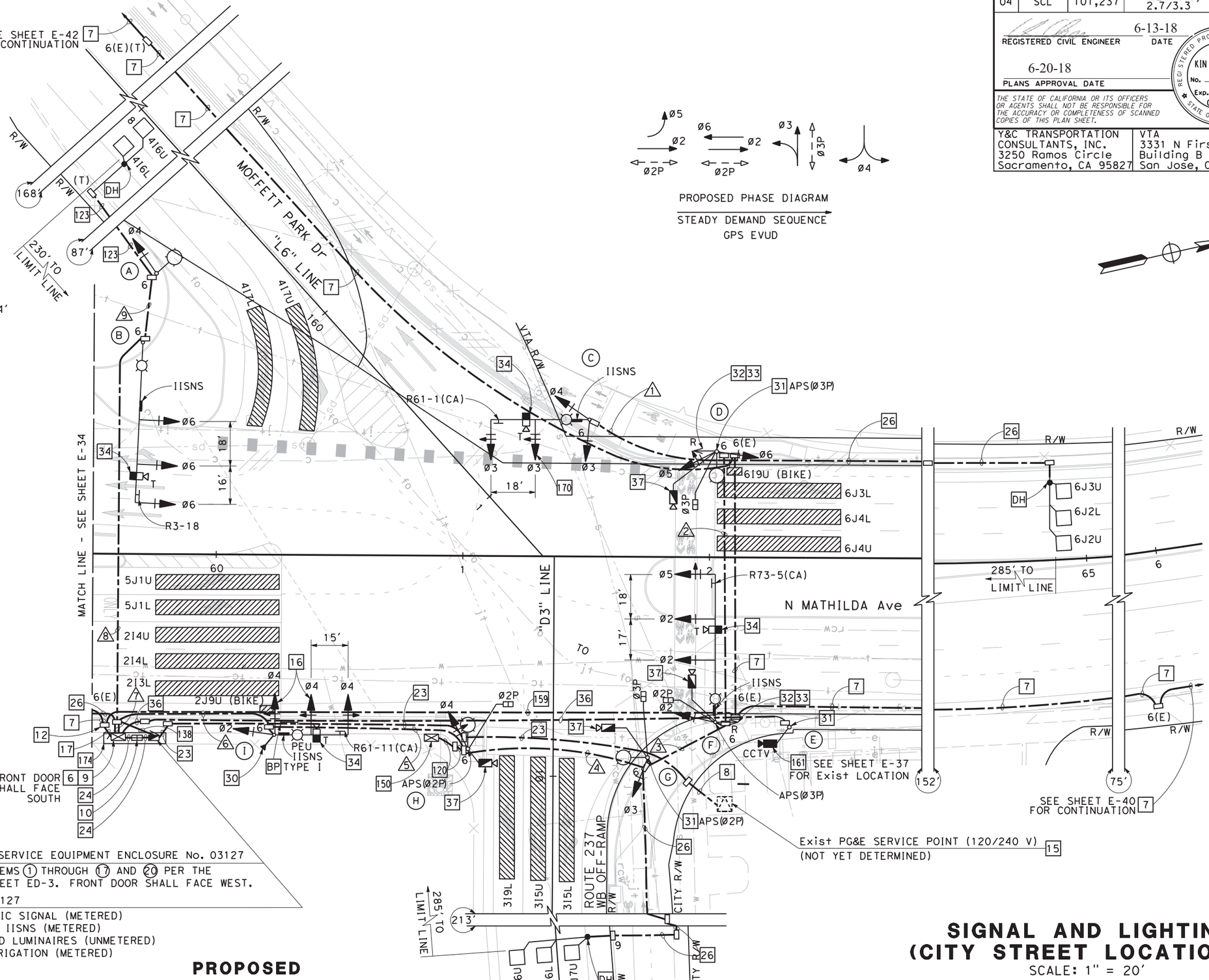

INSTALL TYPE III-AF SERVICE EQUIPMENT ENCLOSURE No. 03127

PROVIDE EQUIPMENT ITEMS (1) THROUGH (17) AND (20) PER THE WIRING DIAGRAM ON SHEET ED-3. FRONT DOOR SHALL FACE WEST.

CTID No. 04372370003127

LOAD: ±1000 W TRAFFIC SIGNAL (METERED)
4 - 55 W LED IISNS (METERED)
8 - 108 W LED LUMINAIRES (UNMETERED)
1 - 150 W IRRIGATION (METERED)

FOR NOTES, ABBREVIATIONS, SYMBOLS AND LEGEND, SEE SHEETS E-1 TO E-4

PROPOSED

APPROVED FOR ELECTRICAL WORK ONLY

SIGNAL AND LIGHTING (CITY STREET LOCATION 7)

SCALE: 1" = 20'

E-38

STATE OF CALIFORNIA - DEPARTMENT OF TRANSPORTATION — Caltrans

CONSULTANT FUNCTIONAL SUPERVISOR: TIMOTHY J.LEE

CALCULATED-DESIGNED BY: MENG YANG
CHECKED BY: DAN YAU

REVISED BY | DATE REVISED

LAST REVISION: 00-00-00
DATE PLOTTED => $DATE
TIME PLOTTED => $TIME

BORDER LAST REVISED 7/2/2010

USERNAME => $USER
DGN FILE => $REQUEST

RELATIVE BORDER SCALE IS IN INCHES 0 1 2 3

UNIT 0712 | PROJECT NUMBER & PHASE 0413000204

SCHEDULES: (FOR SHEET E-38)

CONDUCTOR AND CONDUIT SCHEDULE

CONDUCTOR SCHEDULE	No. OF CONDUCTORS IN CONDUIT RUN NUMBER								
	1	2	3	4	5	6	7	8	9
No. 14 CONDUCTORS									
Ø2			3	3	3	3	3		
Ø3	3	3	3	3	3	3	3		
Ø4	3	3	3	3	3	3	6	3	3
Ø5		3	3	3	3	3	3		
Ø6		3	3	3	3	3	6	3	
Ø2P			2	2	2	2	2		
Ø3P		2	2	2	2	2	2		
APS Ø2P				2	2	2	2		
APS Ø3P		2	2	2	2	2	2		
PEU						3			
SPARES	3	3	3	3	3	3	6	3	3
TOTAL No. 14	9	19	24	26	26	29	35	9	6
No. 10 CONDUCTORS									
IISNS	2	2	2	2	2	2		2	
IRRIGATION					2	2			
TOTAL No. 10	2	2	2	2	4	4		2	
No. 8 CONDUCTORS									
LIGHTING	2	2	2	2	2	2		2	2
SIGNAL NEUTRAL	1	1	1	1	1	2	2	1	1
GROUND	1	1	1	1	1	1	1	1	1
TOTAL No. 8	4	4	4	4	4	5	3	4	4
DETECTOR CABLES (DLC)									
2I2U							1		
2I2L							1		
2I3U							1		
3J6U					1	1	1		
3J6L					1	1	1		
3J7U					1	1	1		
4I6U							1	1	1
4I6L							1	1	1
6J2U		1	1	1	1	1	1		
6J2L		1	1	1	1	1	1		
6J3U		1	1	1	1	1	1		
TOTAL DETECTOR CABLES		3	3	6	6	6	11	2	2
THERMAL VEHICLE DETECTION CABLE	1	1	2	2	2	3	4	1	
THERMAL PEDESTRIAN DETECTION CABLE		1	2	3	4	4	4		
GPS EVUC						1	1		
CONDUIT SIZE (INCHES)	3	4	4	4	4	2-4"	2-4"	3	3
NEW/EXISTING CONDUIT	N	N	N	N	N	N	N	N	N
% FILL	10	10	14	17	18	13	14	12	7

FOR NOTES, ABBREVIATIONS, SYMBOLS AND LEGEND, SEE SHEETS E-1 TO E-4

POLE AND EQUIPMENT SCHEDULE

No.	STANDARD TYPE	STANDARD SMA (FEET)	STANDARD LMA (FEET)	VEHICLE SIGNAL MOUNTING MAST ARM●	VEHICLE SIGNAL MOUNTING POLE	PEDESTRIAN SIGNAL MOUNTING	APS Ø	APS ARROW	LED▼ LUMINAIRE (WATT)	REMARKS *
(A)	15TS		15		SV-1-T				108	
(B)	61-5-100	65	15	MAS MAS MAS					108	IS R3-18. 34
(C)	26-4-100	40	15	MAS MAS-4B	SV-2-TA				108	IS R61-1(CA). 34 170
(D)	15TS		15		SV-2-TA	SP-1-T	3P	→	108	INSTALL RED LIGHT ENFORCEMENT UNITS FOR Ø3 AND Ø6. 31 32 33 37
(E)	CCTV 40									31 161
(F)	61-5-100	60	15	MAS MAS MAS	SV-1-T	SP-1-T	3P	←	108	INSTALL RED LIGHT ENFORCEMENT UNITS FOR Ø2 AND Ø4. IS R73-5(CA). 32 33 34 37 161
(G)	15TS		12		SV-1-T	SP-1-T	2P	→	108	31 37
(H)	15TS		15		SV-1-T	SP-1-T	2P	←	108	37
(I)	19-4-100	30	15	MAS MAS	SV-2-TB				108	INSTALL PEU ON TOP OF POLE. IS R61-11(CA). 16 30 34

*OTHER REQUIREMENTS ARE COVERED BY NOTES, LEGEND, SPECIAL PROVISIONS AND STANDARD SPECIFICATIONS. FOR TYPE OF STANDARD, VEHICLE AND PEDESTRIAN SIGNAL MOUNTING, SEE STANDARD PLANS.

● INSTALL ASTRO-BRAC MOUNTING, OR APPROVED EQUAL, PER CITY'S STANDARD.

▼ INSTALL 108 W LED PHILIPS ROADFOCUS LUMINAIRE (MODEL No. RFM-108W32LED4K-G2-R3M-UNV-DMG-RCD7-SP2-API-GY3) OR APPROVED EQUAL.

LED INTERNALLY ILLUMINATED STREET NAME SIGN SCHEDULE

No.	FONT	PANEL SIZE	LETTER SIZE	PANEL FACING	MESSAGE
(B)	FHWA SERIES E	96"	8" U.C. 6" L.C.	NORTH	Moffett Park ➡
(C)	FHWA SERIES E	96"	8" U.C. 6" L.C.	EAST	N. Mathilda
(F)	FHWA SERIES E	96"	8" U.C. 6" L.C.	SOUTH	⬅Moffett Park
(I)	FHWA SERIES E	96"	8" U.C. 6" L.C.	WEST	N. Mathilda

PROPOSED

Dist	COUNTY	ROUTE	POST MILES TOTAL PROJECT	SHEET No.	TOTAL SHEETS
04	SCL	101,237	45.2/45.8, 2.7/3.3	420	736

6-13-18
REGISTERED CIVIL ENGINEER — DATE

6-20-18
PLANS APPROVAL DATE

REGISTERED PROFESSIONAL ENGINEER — KIN Y. CHAN No. 55391 Exp. 12/31/18 CIVIL — STATE OF CALIFORNIA

THE STATE OF CALIFORNIA OR ITS OFFICERS OR AGENTS SHALL NOT BE RESPONSIBLE FOR THE ACCURACY OR COMPLETENESS OF SCANNED COPIES OF THIS PLAN SHEET.

Y&C TRANSPORTATION CONSULTANTS, INC.
3250 Ramos Circle
Sacramento, CA 95827

VTA
3331 N First St
Building B
San Jose, CA 95134

SIGNAL AND LIGHTING (CITY STREET LOCATION 7)

E-39

REVISED BY | DATE REVISED: MENG YANG | DAN YAU
CALCULATED-DESIGNED BY | CHECKED BY
CONSULTANT FUNCTIONAL SUPERVISOR: TIMOTHY J. LEE
STATE OF CALIFORNIA - DEPARTMENT OF TRANSPORTATION — Caltrans

LAST REVISION 00-00-00 | DATE PLOTTED => $DATE | TIME PLOTTED => $TIME

BORDER LAST REVISED 7/2/2010 | USERNAME => $USER | DGN FILE => $REQUEST | RELATIVE BORDER SCALE IS IN INCHES 0 1 2 3 | UNIT 0712 | PROJECT NUMBER & PHASE 0413000204

Dist	COUNTY	ROUTE	POST MILES TOTAL PROJECT	SHEET No.	TOTAL SHEETS
04	SCL	101,237	45.2/45.8, 2.7/3.3	421	736

6-13-18
REGISTERED CIVIL ENGINEER — DATE

KIN Y. CHAN
No. 55391
Exp. 12/31/18
CIVIL
REGISTERED PROFESSIONAL ENGINEER
STATE OF CALIFORNIA

6-20-18
PLANS APPROVAL DATE

THE STATE OF CALIFORNIA OR ITS OFFICERS OR AGENTS SHALL NOT BE RESPONSIBLE FOR THE ACCURACY OR COMPLETENESS OF SCANNED COPIES OF THIS PLAN SHEET.

Y&C TRANSPORTATION CONSULTANTS, INC.
3250 Ramos Circle
Sacramento, CA 95827

VTA
3331 N First St
Building B
San Jose, CA 95134

NOTES:

1. FOR ACCURATE RIGHT OF WAY DATA, CONTACT RIGHT OF WAY ENGINEERING AT THE DISTRICT OFFICE.
2. FOR SCHEDULES, SEE SHEET E-41.

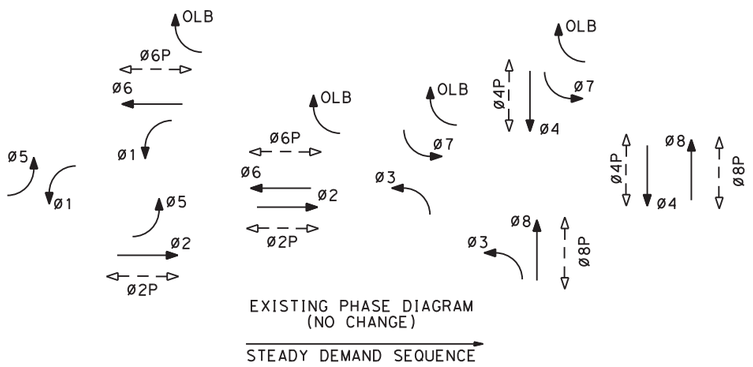

EXISTING PHASE DIAGRAM
(NO CHANGE)

STEADY DEMAND SEQUENCE

OLA TO BE DARK UNLESS ACTIVATED GREEN WITH RAILROAD PRE-EMPTION

OLB = Ø6 + Ø7

OLC TO BE DARK UNLESS ACTIVATED YELLOW AND RED BY FIRE STATION PRE-EMPTION

FIRE STATION PRE-EMPTION PHASE

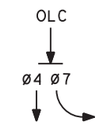

= RED

= SERVICEABLE PHASE

RAILROAD PRE-EMPTION PHASE

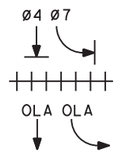

TRACK CLEARANCE PHASE BEFORE LRT ARRIVES

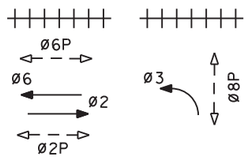

PRE-EMPTION PHASE WITH GATE DOWN

NOTE: RAILROAD PRE-EMPTION TAKES PRECEDENCE OVER FIRE STATION PRE-EMPTION AND EMERGENCY VEHICLE PRE-EMPTION.

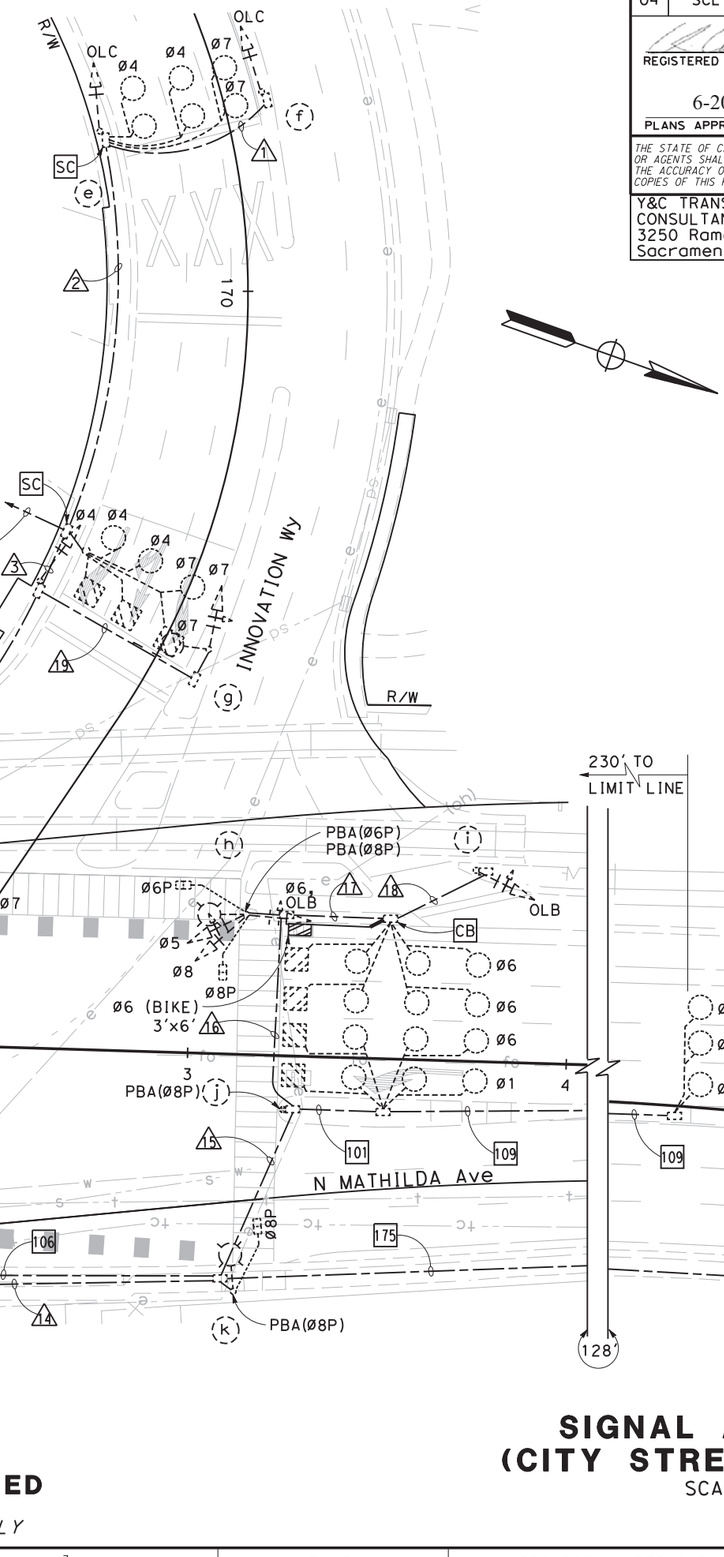

FOR NOTES, ABBREVIATIONS, SYMBOLS AND LEGEND, SEE SHEETS E-1 TO E-4

PROPOSED

APPROVED FOR ELECTRICAL WORK ONLY

SIGNAL AND LIGHTING (CITY STREET LOCATION 8)

SCALE: 1" = 20'

E-40

STATE OF CALIFORNIA - DEPARTMENT OF TRANSPORTATION
Caltrans

CONSULTANT FUNCTIONAL SUPERVISOR: TIMOTHY J. LEE

CALCULATED-DESIGNED BY: MENG YANG
CHECKED BY: DAN YAU

REVISED BY | DATE REVISED

LAST REVISION: DATE PLOTTED => $DATE $TIME
00-00-00 TIME PLOTTED =>

BORDER LAST REVISED 7/2/2010

USERNAME => $USER
DGN FILE => $REQUEST

RELATIVE BORDER SCALE IS IN INCHES 0 1 2 3

UNIT 0712 | PROJECT NUMBER & PHASE 0413000204

SCHEDULES: (FOR SHEET E-40)

CONDUCTOR AND CONDUIT SCHEDULE

CONDUCTOR SCHEDULE	No. OF CONDUCTORS — CONDUIT RUN NUMBER 1	2	3	4	5	6	7	8	9	10	11	12	13	14	15	16	17	18	19
No. 14 CONDUCTORS																			
Ø1						3	3	3	3	6	3								
Ø2										6	6	3							
Ø3					3	3	6	6	6	6									
Ø4				3	6	6	6	6	6	7	1								
Ø5										3	3	3		3	3	3			
Ø6						3	3	3	3	6	3	3		3	3	3			
Ø7				3	3	3	3	3	3	3									3
Ø8					3	3	3	3	3	6	3	3	3	3	3	3			
OLA										3	3	3							
OLB										3	3	3		3	3	3	3	3	
OLC	2	2	2	2	2	2	2	2	2	2									
Ø2P										2	2	2							
Ø4P					2	2	2	2	2	4	2								
Ø6P						2	2	2	2	4	2	2		2	2	2			
Ø8P										4	4	4		4	2	2			
PBA Ø2P										2	2	1	1						
PBA Ø4P					1	1	1	1	1	2	1								
PBA Ø6P					1	1	1	1	1	2	1	1		1	1	1			
PBA Ø8P										3	3	3		3	2	1			
FIREHOUSE PREEMPTION			2	2	2	2	2	2	2	2									
PBA COMMON					1	1	1	1	1	2	1	1	1	1	1	1			
IISNS					2	2	2	2	2		2	2							
PEU											3								
SPARES	3	3	3	6	6	6	6	6	6	12	6	6	3	3	3	3	3	3	3
TOTAL No. 14	5	5	7	16	32	40	43	43	43	89	53	40	8	26	23	22	6	6	6
No. 8 CONDUCTORS																			
LIGHTING				2	2	2	2	2	2		2	2		2	2	2			2
SIGNAL NEUTRAL	1	1	1	1	1	1	1	1	1	2	1	1	1	1	1	1	1	1	1
GROUND	1	1	1	1	1	1	1	1	1	1	1	1	1	1	1	1	1	1	1
TOTAL No. 8	2	2	2	4	4	4	4	4	4	3	4	4	2	4	4	4	2	2	4
No. 6 CONDUCTORS																			
SERVICE TO CONTROLLER										2									
TOTAL No. 6										2									
DETECTOR CABLES (DLC)																			
Ø1										1	1	1		1	1				
Ø2									3	3									
Ø3										1	1	1	1						
Ø4		2*	4*	4*	4*	4*	4*	4	4*	4*									
Ø5									2	2									
Ø6										1+6	1+6	1+6		1+6	1+6	1+½	1+½		
Ø7		1*	2*	2*	2*	2*	2*	2	2*	2*									
Ø8										1	1	1	1						
TOTAL DETECTOR CABLES		3	6	6	6	6	6	6	11	21	10	10	2	8	8	3	3		
VIDEO DETECTION CABLE (COAX)					1*	1*	1*	1	1*	1* 1	1	1							
VIDEO DETECTION CABLE (POWER)					1*	1*	1*	1	1*	1* 1	1	1							
GPS EVUC										1	1								
CONDUIT SIZE (INCHES)	1½	2	2	2	2-3"	2-3"	2-3"	2-3"	2-3"	2-3"	2-3"	2-3"	3	3	3	2	2	2	2
NEW/EXISTING CONDUIT	E	E	E	E	E	E	E	N	E	E	E	E	E	E	E	E	E	E	E
% FILL	11	13	22	31	14	15	16	16	18	32	20	17	6	18	18	27	17	7	11

NOTES: ALL CONDUCTORS IN EXISTING CONDUIT ARE TO REMAIN UNLESS OTHERWISE NOTED. FOR NEW CONDUCTORS OR CABLES TO BE ADDED IN EXISTING CONDUIT SEE SECTION 87.103F(1).

*REMOVE EXISTING CONDUCTOR(S)/CABLE(S). INSTALL NEW CONDUCTOR(S)/CABLE(S) AS INDICATED.

+ADD CONDUCTOR(S)/CABLE(S) IN Exist CONDUIT.

FOR NOTES, ABBREVIATIONS, SYMBOLS AND LEGEND, SEE SHEETS E-1 TO E-4

POLE AND EQUIPMENT SCHEDULE

No.	STANDARD TYPE	SMA (FEET)	LMA (FEET)	VEHICLE SIGNAL MOUNTING MAST ARM	VEHICLE SIGNAL MOUNTING POLE	PEDESTRIAN SIGNAL MOUNTING	PBA Ø	PBA ARROW	LED LUMINAIRE (Max WATT)	REMARKS *
(a)	1-B				TV-1-T					EXISTING EQUIPMENT TO REMAIN.
(b)	26-4-70	45	15	MAS MAS	SV-1-T	SP-1-T			235	EXISTING EQUIPMENT TO REMAIN.
(c)	29A-5-70	50	15	MAS MAS MAS	SV-2-TA	SP-2-T	4P 6P	← →	235	EXISTING EQUIPMENT TO REMAIN.
(d)	1-B				TV-1-T					EXISTING EQUIPMENT TO REMAIN.
(e)	1-B				TV-1-T					EXISTING EQUIPMENT TO REMAIN.
(f)	1-B				TV-1-T					EXISTING EQUIPMENT TO REMAIN.
(g)	15		15		SV-1-T				235	EXISTING EQUIPMENT TO REMAIN.
(h)	15		15		SV-3-TA	SP-2-T	6P 8P	→ ←	235	EXISTING EQUIPMENT TO REMAIN.
(i)	1-B				TV-1-T					EXISTING EQUIPMENT TO REMAIN.
(j)	PBA POST						8P	↔		EXISTING EQUIPMENT TO REMAIN.
(k)	15TS		15			SP-1-T	8P	←	235	EXISTING EQUIPMENT TO REMAIN.
(l)	29-5-100	60	15	MAS MAS	SV-3-TA	SP-1-T			235	EXISTING EQUIPMENT TO REMAIN.
(m)	1-B				TV-1-T		2P	→		EXISTING EQUIPMENT TO REMAIN.
(n)	15TS		15		SV-3-TA	SP-2-T	2P 4P	← →	235	EXISTING EQUIPMENT TO REMAIN.

Dist	COUNTY	ROUTE	POST MILES TOTAL PROJECT	SHEET No.	TOTAL SHEETS
04	SCL	101,237	45.2/45.8, 2.7/3.3	422	736

6-13-18
REGISTERED CIVIL ENGINEER — DATE

KIN Y. CHAN No. 55391 Exp. 12/31/18 CIVIL — REGISTERED PROFESSIONAL ENGINEER — STATE OF CALIFORNIA

6-20-18
PLANS APPROVAL DATE

THE STATE OF CALIFORNIA OR ITS OFFICERS OR AGENTS SHALL NOT BE RESPONSIBLE FOR THE ACCURACY OR COMPLETENESS OF SCANNED COPIES OF THIS PLAN SHEET.

Y&C TRANSPORTATION CONSULTANTS, INC.
3250 Ramos Circle
Sacramento, CA 95827

VTA
3331 N First St
Building B
San Jose, CA 95134

REVISED BY | DATE REVISED
MENG YANG | DAN YAU
CALCULATED-DESIGNED BY | CHECKED BY
CONSULTANT FUNCTIONAL SUPERVISOR: TIMOTHY J. LEE

STATE OF CALIFORNIA - DEPARTMENT OF TRANSPORTATION

PROPOSED

SIGNAL AND LIGHTING (CITY STREET LOCATION 8)

E-41

LAST REVISION 00-00-00 | DATE PLOTTED => $DATE | TIME PLOTTED => $TIME

BORDER LAST REVISED 7/2/2010 | USERNAME => $USER | DGN FILE => $REQUEST | RELATIVE BORDER SCALE IS IN INCHES 0 1 2 3 | UNIT 0712 | PROJECT NUMBER & PHASE 0413000204

NOTES:

1. FOR ACCURATE RIGHT OF WAY DATA, CONTACT RIGHT OF WAY ENGINEERING AT THE DISTRICT OFFICE.
2. FOR SCHEDULES, SEE SHEET E-43.

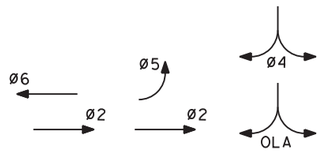

EXISTING PHASE DIAGRAM
STEADY DEMAND SEQUENCE
OLA = ø4+ø4 GREEN EXT
GPS EVUD

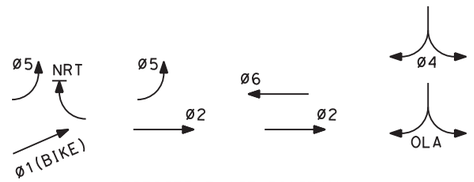

PROPOSED PHASE DIAGRAM
STEADY DEMAND SEQUENCE
OLA = ø4+ø4 GREEN EXT
GPS EVUD
ø1 AND ø6 CANNOT BE GREEN AT THE SAME TIME
NRT SIGN SHALL BE ACTIVATED WITH ø1(BIKE) GREEN

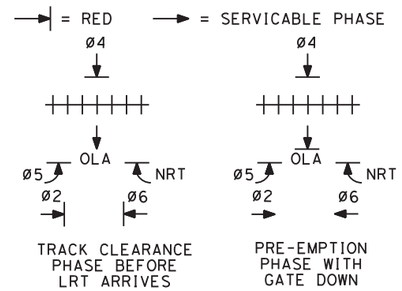

TRACK CLEARANCE PHASE BEFORE LRT ARRIVES

PRE-EMPTION PHASE WITH GATE DOWN

TRACK CLEARANCE PRE-EMPTION PHASE
EXISTING RAILROAD PRE-EMPTION PHASE
(NO CHANGE)

Dist	COUNTY	ROUTE	POST MILES TOTAL PROJECT	SHEET No.	TOTAL SHEETS
04	SCL	101,237	45.2/45.8, 2.7/3.3	423	736

6-13-18
REGISTERED CIVIL ENGINEER DATE

KIN Y. CHAN
No. 55391
Exp. 12/31/18
CIVIL
REGISTERED PROFESSIONAL ENGINEER
STATE OF CALIFORNIA

6-20-18
PLANS APPROVAL DATE

THE STATE OF CALIFORNIA OR ITS OFFICERS OR AGENTS SHALL NOT BE RESPONSIBLE FOR THE ACCURACY OR COMPLETENESS OF SCANNED COPIES OF THIS PLAN SHEET.

Y&C TRANSPORTATION CONSULTANTS, INC.
3250 Ramos Circle
Sacramento, CA 95827

VTA
3331 N First St
Building B
San Jose, CA 95134

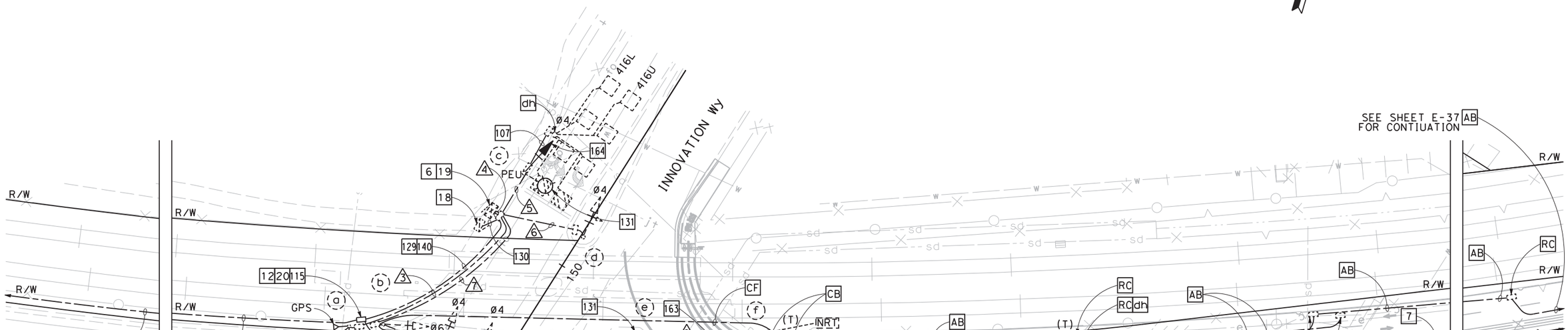

FOR NOTES, ABBREVIATIONS, SYMBOLS AND LEGEND, SEE SHEETS E-1 TO E-4

PROPOSED

APPROVED FOR ELECTRICAL WORK ONLY

SIGNAL AND LIGHTING (CITY STREET LOCATION 9)

SCALE: 1" = 20'

E-42

REVISED BY	DATE REVISED

CALCULATED-DESIGNED BY: MENG YANG
CHECKED BY: DAN YAU
CONSULTANT FUNCTIONAL SUPERVISOR: TIMOTHY J. LEE
STATE OF CALIFORNIA - DEPARTMENT OF TRANSPORTATION
Caltrans

LAST REVISION: 00-00-00
DATE PLOTTED => $DATE
TIME PLOTTED => $TIME

BORDER LAST REVISED 7/2/2010
USERNAME => $USER
DGN FILE => $REQUEST
RELATIVE BORDER SCALE IS IN INCHES 0 1 2 3
UNIT 0712
PROJECT NUMBER & PHASE 0413000204

SCHEDULES: (FOR SHEET E-42)

CONDUCTOR AND CONDUIT SCHEDULE

CONDUCTOR SCHEDULE	No. OF CONDUCTORS — CONDUIT RUN NUMBER 1	2	3	4	5	6	7	8	9
No. 14 CONDUCTORS									
Ø1		3+	3+	6+			3+	3+	3+
Ø2	3	3	3	3					
Ø4				6	3	3	3		
Ø5	3	3	3	6			3	3	
Ø6			3	6			3	3	
NRT ACTIVATED BLANK-OUT SIGN				2			2	2	2
OLA	3+	3	3	3					
PEU					3				
SPARES	3	3	3	3	3	3	3	3	3
TOTAL No. 14	12	12	15	29	9	6	14	11	5
No. 10 CONDUCTORS									
IISNS	2	2	2						
LIGHTING	2	2	2		2	2	2	2	
TOTAL No. 10	4	4	4		2	2	2	2	
No. 8 CONDUCTORS									
SIGNAL NEUTRAL	1	1	2	2	1	1	1	1	
TOTAL No. 8	1	1	2	2	1	1	1	1	
No. 6 CONDUCTORS									
CONTROLLER				2					
TOTAL No. 6				2					
DETECTOR CABLES (DLC)									
2I2U		1	1	1					
2I2L		1	1	1					
2I4U		1-	1-	1-					
2I4L		1-	1-	1-					
4I6U				1	1				
4I6L				1	1				
5J1U		1-	1-	1-					
5J1L		1	1	1					
6J2U				1-+			1-+	1-+	1-+
6J2L				1-+			1-+	1-+	1-+
6J4U				1-			1-	1-	1-
6J4L				1-			1-	1-	1-
TOTAL DETECTOR CABLES		3	3	7	2		2	2	2
THERMAL VEHICLE DETECTION CABLE	1+	1+	2+	2+					
CCTV CABLE			1+	1+					
GPS EVUC			1	1					
SIC				1-/1					
SMFO CABLE (12-STRAND)				1+					
CONDUIT SIZE (INCHES)	2	2	2-2"	2-3"	2	2	2	2	2
NEW/EXISTING CONDUIT	E	E	E	E	E	E	E	E	E
% FILL	21	29	28	24	13	7	18	17	9

NOTES: ALL CONDUCTORS IN EXISTING CONDUIT ARE TO REMAIN UNLESS OTHERWISE NOTED. FOR NEW CONDUCTORS OR CABLES TO BE ADDED IN EXISTING CONDUIT SEE SECTION 87.103F(1).

\+ ADD CONDUCTOR(S)/CABLE(S) IN Exist CONDUIT.

\- REMOVE CONDUCTOR(S)/CABLE(S) FROM Exist CONDUIT.

FOR NOTES, ABBREVIATIONS, SYMBOLS AND LEGEND, SEE SHEETS E-1 TO E-4

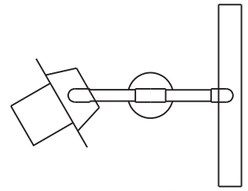

POLE (f)

DETAIL A
TV-2-T (Mod)

POLE AND EQUIPMENT SCHEDULE

No.	STANDARD TYPE	STANDARD SMA (FEET)	STANDARD LMA (FEET)	VEHICLE SIGNAL MOUNTING MAST ARM	VEHICLE SIGNAL MOUNTING POLE	PEDESTRIAN SIGNAL MOUNTING	APS Ø	APS ARROW	LED▼ LUMINAIRE (WATT)	REMARKS
(a)	Exist SIGNAL STANDARD	15	8	MAS					108	EXISTING GPS EVUD AND PEU TO REMAIN. 34 35 131
(b)	Exist 27-4-70	40		MAS MAS	SV-1-T					
(c)	Exist 15		15		SV-1-T◆				108	131 164
(d)	Exist 1-B				TV-1-T					
(e)	Exist 15		15		SV-2-TA◆				108	131 164
(f)	Exist 1-B				TV-2-T◆■ (Mod)					163
(g)	Exist SIGNAL STANDARD	30	15	MAS MAS	SV-2-TB◆				108	34 124 131
(h)	Exist SIGNAL STANDARD	15	15	MAS	SV-1-T SV-1-T◆ SV-1-T◆				108	INSTALL Ø1 BICYCLE SIGNAL HEAD AT 7' ABOVE GRADE AND MOVE UP Exist Ø2 VEHICLE SIGNAL HEAD TO 6" ABOVE Ø1 BICYCLE SIGNAL HEAD. 131 163

▼ INSTALL 108 W LED PHILIPS ROADFOCUS LUMINAIRE (MODEL No. RFM-108W32LED4K-G2-R3M-UNV-DMG-RCD7-SP2-API-GY3) OR APPROVED EQUAL.

◆ INSTALL NEW EQUIPMENT TO Exist STANDARD.

■ SEE MOUNTING DETAIL A ON THIS SHEET.

Dist	COUNTY	ROUTE	POST MILES TOTAL PROJECT	SHEET No.	TOTAL SHEETS
04	SCL	101,237	45.2/45.8, 2.7/3.3	424	736

6-13-18
REGISTERED CIVIL ENGINEER — DATE

6-20-18
PLANS APPROVAL DATE

REGISTERED PROFESSIONAL ENGINEER — KIN Y. CHAN No. 55391 Exp. 12/31/18 CIVIL — STATE OF CALIFORNIA

THE STATE OF CALIFORNIA OR ITS OFFICERS OR AGENTS SHALL NOT BE RESPONSIBLE FOR THE ACCURACY OR COMPLETENESS OF SCANNED COPIES OF THIS PLAN SHEET.

Y&C TRANSPORTATION CONSULTANTS, INC.
3250 Ramos Circle
Sacramento, CA 95827

VTA
3331 N First St
Building B
San Jose, CA 95134

REVISED BY / DATE REVISED

MENG YANG / DAN YAU

CALCULATED-DESIGNED BY / CHECKED BY

CONSULTANT FUNCTIONAL SUPERVISOR: TIMOTHY J.LEE

STATE OF CALIFORNIA - DEPARTMENT OF TRANSPORTATION

SIGNAL AND LIGHTING (CITY STREET LOCATION 9)

PROPOSED

E-43

LAST REVISION 00-00-00 — DATE PLOTTED => $DATE — TIME PLOTTED => $TIME

BORDER LAST REVISED 7/2/2010 | USERNAME => $USER | DGN FILE => $REQUEST | RELATIVE BORDER SCALE IS IN INCHES 0 1 2 3 | UNIT 0712 | PROJECT NUMBER & PHASE 0413000204

NOTES:

1. FOR ACCURATE RIGHT OF WAY DATA, CONTACT RIGHT OF WAY ENGINEERING AT THE DISTRICT OFFICE.
2. FOR SCHEDULES, SEE SHEET E-45.

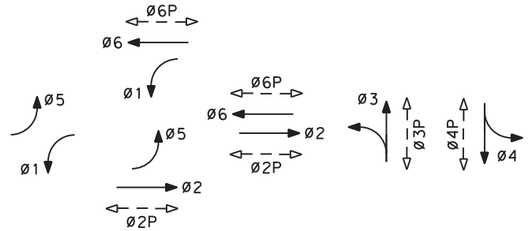

PROPOSED PHASE DIAGRAM

STEADY DEMAND SEQUENCE
GPS EVUD

DETAIL A
NO SCALE

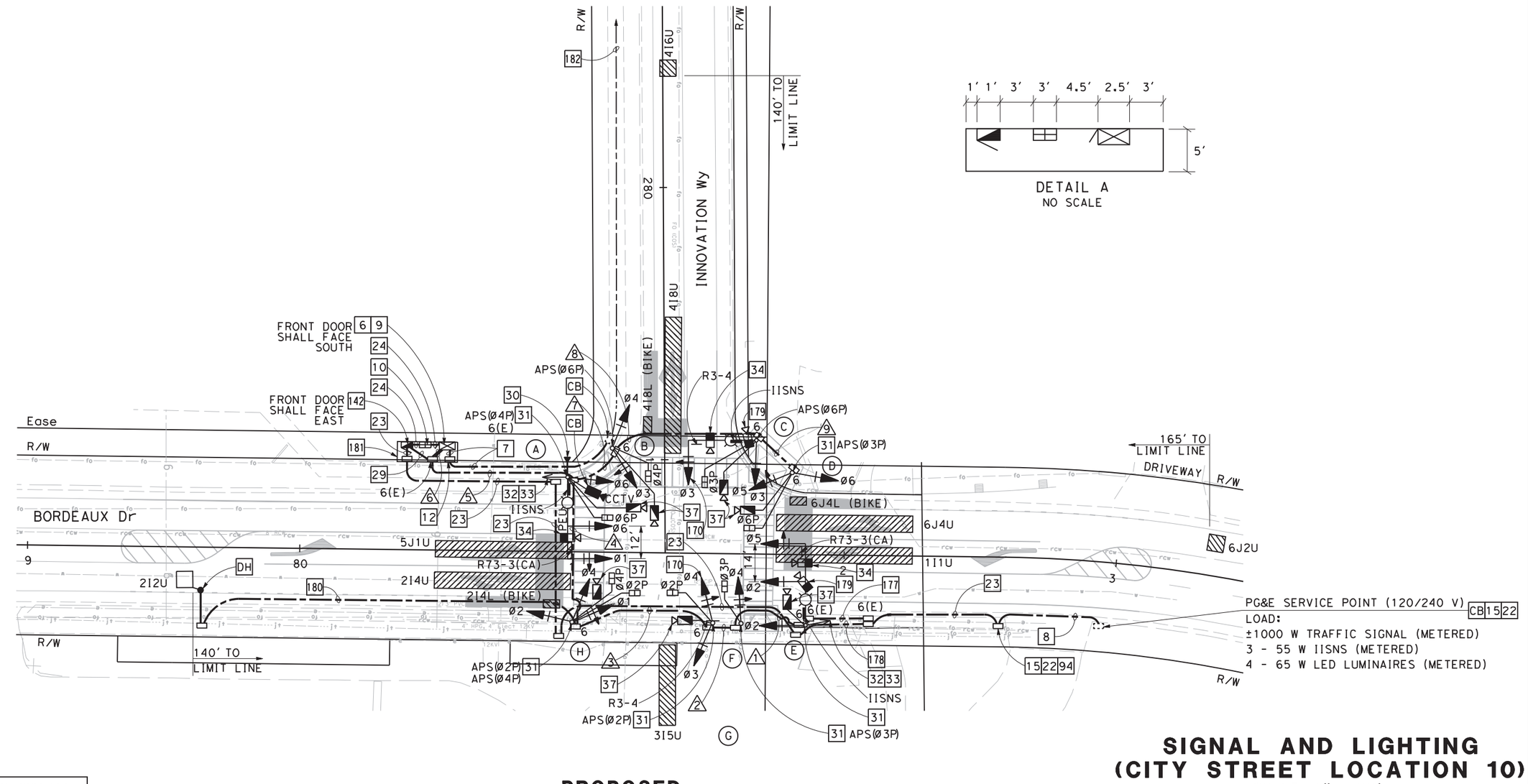

FOR NOTES, ABBREVIATIONS, SYMBOLS AND LEGEND, SEE SHEETS E-1 TO E-4

PROPOSED

APPROVED FOR ELECTRICAL WORK ONLY

SIGNAL AND LIGHTING (CITY STREET LOCATION 10)

SCALE: 1" = 20'

E-44

Dist	COUNTY	ROUTE	POST MILES TOTAL PROJECT	SHEET No.	TOTAL SHEETS
04	SCL	101,237	45.2/45.8, 2.7/3.3	425	736

6-13-18
REGISTERED CIVIL ENGINEER — DATE

KIN Y. CHAN
No. 55391
Exp. 12/31/18
CIVIL
REGISTERED PROFESSIONAL ENGINEER
STATE OF CALIFORNIA

6-20-18
PLANS APPROVAL DATE

THE STATE OF CALIFORNIA OR ITS OFFICERS OR AGENTS SHALL NOT BE RESPONSIBLE FOR THE ACCURACY OR COMPLETENESS OF SCANNED COPIES OF THIS PLAN SHEET.

Y&C TRANSPORTATION CONSULTANTS, INC.
3250 Ramos Circle
Sacramento, CA 95827

VTA
3331 N First St
Building B
San Jose, CA 95134

CALCULATED-DESIGNED BY
CHECKED BY
MENG YANG
DAN YAU
REVISED BY
DATE REVISED
CONSULTANT FUNCTIONAL SUPERVISOR
TIMOTHY J. LEE
STATE OF CALIFORNIA - DEPARTMENT OF TRANSPORTATION
Caltrans

LAST REVISION 00-00-00
DATE PLOTTED => $DATE
TIME PLOTTED => $TIME

BORDER LAST REVISED 7/2/2010
USERNAME => $USER
DGN FILE => $REQUEST
RELATIVE BORDER SCALE IS IN INCHES 0 1 2 3
UNIT 0712
PROJECT NUMBER & PHASE 0413000204

SCHEDULES: (FOR SHEET E-44)

CONDUCTOR AND CONDUIT SCHEDULE

CONDUCTOR SCHEDULE	No. OF CONDUCTORS — CONDUIT RUN NUMBER 1	2	3	4	5	6	7	8	9
No. 14 CONDUCTORS									
Ø1				3	3	3			
Ø2	3	3	3	3	3	3			
Ø3		3	3	3	6	6	3		
Ø4			3	3	6	6	3	3	
Ø5	3	3	3	3	6	6	3	3	3
Ø6					3	3	3	3	3
Ø2P			2	2	2	2			
Ø3P		2	2	2	4	4	2	2	
Ø4P				2	4	4	2		
Ø6P					2	2	2	2	2
APS Ø2P			2	2	2	2			
APS Ø3P		2	2	2	4	4	2	2	2
APS Ø4P				2	2	2			
APS Ø6P					2	2	2	2	
PEU					3				
SPARES	3	3	3	3	6	6	3	3	3
TOTAL No. 14	9	16	23	30	58	55	25	20	13
No. 10 CONDUCTORS									
IISNS	2	2	2	2	2		2	2	
No. 8 CONDUCTORS									
LIGHTING	2	2	2	2	2		2	2	
SIGNAL NEUTRAL	1	1	1	1	2	2	1	1	1
GROUND	1	1	1	1	1	1	1	1	1
TOTAL No. 8	4	4	4	4	5	3	4	4	2
DETECTOR CABLES (DLC)									
212U				1	1	1			
THERMAL VEHICLE DETECTION CABLE	2	2	2	2	5	5	2	2	
THERMAL PEDESTRIAN DETECTION CABLE	1	1	2	3	7	7	3	2	1
CCTV CABLE					1	1			
GPS EVUC					1	1			
CONDUIT SIZE (INCHES)	3	3	4	4	2-4"	2-4"	4	4	3
% FILL	15	17	12	14	16	16	13	11	6

POLE AND EQUIPMENT SCHEDULE

No.	STANDARD TYPE	SMA (FEET)	LMA (FEET)	VEHICLE SIGNAL MOUNTING MAST● ARM	POLE	PEDESTRIAN SIGNAL MOUNTING	APS Ø	APS ARROW	LED▼ LUMINAIRE (WATT)	REMARKS *
(A)	19-4-100	30	12	MAS / MAS	SV-1-T	SP-1-T	4P	←	65	INSTALL RED LIGHT ENFORCEMENT UNITS FOR Ø3 AND Ø6. IS R73-3(CA). 30 31 32 33 34 35 37
(B)	1-B (16')				SV-2-TA	SP-1-T	6P	→		37
(C)	19-4-100	25	12	MAS-4B	SV-1-T	SP-1-T	6P	←	65	IS R3-4. 34 37 170 179
(D)	1-B (16')				SV-2-TA	SP-1-T	3P	→		31 37
(E)	19-4-100	30	12	MAS / MAS	SV-1-T				65	INSTALL RED LIGHT ENFORCEMENT UNITS FOR Ø2 AND Ø4. IS R73-3(CA). 31 32 33 34 37 179
(F)	1-B				TV-1-T	SP-1-T	3P	→		31
(G)	1-B (16')				TV-1-T / SV-1-T	SP-1-T	2P	→		INSTALL R3-4 SIGN TO POLE. 31 37 170
(H)	1-B (16')				SV-3-TB		2P / 4P	→ / ←		31 37

*OTHER REQUIREMENTS ARE COVERED BY NOTES, LEGEND, SPECIAL PROVISIONS AND STANDARD SPECIFICATIONS. FOR TYPE OF STANDARD, VEHICLE AND PEDESTRIAN SIGNAL MOUNTING, SEE STANDARD PLANS.

● INSTALL PELCO ASTRO-BRAC MOUNTING OR APPROVED EQUAL.

▼ INSTALL PHILIPS LUMEC (MODEL No. RFM-[72W32LED4K-009]-G2-R3M-UNV-DMG-RCDY-SPC-API-GY3) OR APPROVED EQUAL.

LED INTERNALLY ILLUMINATED STREET NAME SIGN SCHEDULE

No.	FONT	PANEL SIZE	LETTER SIZE	PANEL FACING	MESSAGE
(A)	FHWA SERIES E	96"	8" U.C. 6" L.C.	BOTH	Innovation
(C)	FHWA SERIES E	96"	8" U.C. 6" L.C.	BOTH	Bordeaux
(E)	FHWA SERIES E	96"	8" U.C. 6" L.C.	BOTH	Innovation

FOR NOTES, ABBREVIATIONS, SYMBOLS AND LEGEND, SEE SHEETS E-1 TO E-4

PROPOSED

Dist	COUNTY	ROUTE	POST MILES TOTAL PROJECT	SHEET No.	TOTAL SHEETS
04	SCL	101,237	45.2/45.8, 2.7/3.3	426	736

REGISTERED CIVIL ENGINEER — DATE 6-13-18

PLANS APPROVAL DATE 6-20-18

REGISTERED PROFESSIONAL ENGINEER — KIN Y. CHAN No. 55391 Exp. 12/31/18 CIVIL — STATE OF CALIFORNIA

THE STATE OF CALIFORNIA OR ITS OFFICERS OR AGENTS SHALL NOT BE RESPONSIBLE FOR THE ACCURACY OR COMPLETENESS OF SCANNED COPIES OF THIS PLAN SHEET.

Y&C TRANSPORTATION CONSULTANTS, INC. 3250 Ramos Circle Sacramento, CA 95827

VTA 3331 N First St Building B San Jose, CA 95134

REVISED BY / DATE REVISED

MENG YANG / DAN YAU

CALCULATED-DESIGNED BY / CHECKED BY

CONSULTANT FUNCTIONAL SUPERVISOR: TIMOTHY J. LEE

STATE OF CALIFORNIA - DEPARTMENT OF TRANSPORTATION

Caltrans

SIGNAL AND LIGHTING (CITY STREET LOCATION 10)

E-45

LAST REVISION 00-00-00 — DATE PLOTTED => $DATE — TIME PLOTTED => $TIME

BORDER LAST REVISED 7/2/2010 — USERNAME => $USER — DGN FILE => $REQUEST — RELATIVE BORDER SCALE IS IN INCHES 0 1 2 3 — UNIT 0712 — PROJECT NUMBER & PHASE 0413000204

Dist	COUNTY	ROUTE	POST MILES TOTAL PROJECT	SHEET No.	TOTAL SHEETS
04	SCL	101,237	45.2/45.8, 2.7/3.3	427	736

6-13-18
REGISTERED CIVIL ENGINEER — DATE

KIN Y. CHAN
No. 55391
Exp. 12/31/18
CIVIL
REGISTERED PROFESSIONAL ENGINEER
STATE OF CALIFORNIA

6-20-18
PLANS APPROVAL DATE

THE STATE OF CALIFORNIA OR ITS OFFICERS OR AGENTS SHALL NOT BE RESPONSIBLE FOR THE ACCURACY OR COMPLETENESS OF SCANNED COPIES OF THIS PLAN SHEET.

Y&C TRANSPORTATION CONSULTANTS, INC. 3250 Ramos Circle Sacramento, CA 95827	VTA 3331 N First St Building B San Jose, CA 95134

NOTES: (FOR SHEETS E-49 TO E-165)

1. THE CONTRACTOR MUST MAINTAIN THE OPERATION OF THE EXISTING SIGNALS AT ALL TIMES DURING CONSTRUCTION.
2. THE CONTRACTOR MUST MAINTAIN PEDESTRIAN AND DRIVEWAY ACCESSES AS REQUIRED UNLESS OTHERWISE NOTED ON THE STAGE CONSTRUCTION PLANS.
3. TEMPORARY ELECTRICAL EQUIPMENT, WHEN NO LONGER REQUIRED FOR STAGE CONSTRUCTION, MUST BE REMOVED AND BECOME THE PROPERTY OF THE CONTRACTOR UNLESS OTHERWISE DIRECTED BY THE ENGINEER, EXCEPT LOOP DETECTORS AND CONDUITS WHICH SHALL BE ABANDONED.
4. TEMPORARY EQUIPMENT SHOWN ON THESE PLANS MUST BE INSTALLED PRIOR TO BEGINNING OF EACH STAGE/PHASE OF CONSTRUCTION AND MAINTAINED IN EFFECTIVE OPERATION THROUGHOUT THAT STAGE/PHASE OF CONSTRUCTION.
5. THE CONTRACTOR MUST BE RESPONSIBLE TO PROVIDE PROTECTION FOR ALL TEMPORARY EQUIPMENT.
6. THE CONTRACTOR MUST VERIFY PERMANENT ELECTRICAL EQUIPMENT LOCATIONS PRIOR TO INSTALLING TEMPORARY ELECTRICAL EQUIPMENT TO AVOID CONFLICT BETWEEN PERMANENT AND TEMPORARY EQUIPMENT.
7. TEMPORARY ELECTRICAL EQUIPMENT SHOWN ON THESE PLANS ARE ON APPROXIMATE LOCATION. EXACT LOCATION MAY NEED TO BE ADJUSTED TO SUIT THE FIELD CONDITION OR AS DIRECTED BY THE ENGINEER.
8. A GROUNDING ELECTRODE MUST BE INSTALLED IN THE PULL BOX ADJACENT TO WOOD POLES AND BOND TO RIGID METAL CONDUIT, UNLESS OTHERWISE NOTED.

EQUIPMENT LEGEND: (FOR SHEETS E-49 TO E-165)

EXISTING OVERHEAD TETHER WIRE

NEW OVERHEAD TETHER WIRE

oh — EXISTING OVERHEAD MESSENGER WIRE

OH — NEW OVERHEAD MESSENGER WIRE WITH CONDUCTORS AS INDICATED ON THE PLAN

EXISTING WOOD POLE WITH NEW LUMINAIRE AS INDICATED ON THE PLAN

NEW YELLOW FLASHING BEACON MOUNTING ON NEW WOOD POLE WITH A W3-8 SIGN

LEGEND: (FOR SHEETS E-49 TO E-165)

200 INSTALL TEMPORARY WOOD POLE WITH CONDUCTORS OR CABLES, CONDUIT RISER AND OTHER EQUIPMENT AS REQUIRED. SEE STANDARD PLANS RSP ES-18A TO RSP ES-19E FOR DETAILS.

201 PROTECT Exist CONDUIT/CONDUCTORS IN PLACE DURING CONSTRUCTION.

202 INSTALL TEMPORARY WOOD POLE WITH CONDUCTORS OR CABLES, CONDUIT RISER, 12' LMA UNLESS OTHERWISE NOTED, 165 W LED Lum AND OTHER EQUIPMENT AS REQUIRED. SEE STANDARD PLAN RSP ES-18A TO RSP ES-19E FOR DETAILS.

203 INSTALL OVERHEAD MESSENGER WIRE WITH CONDUCTORS AS INDICATED ON THE PLAN. SEE STANDARD PLAN RSP ES-18A TO RSP ES-19E FOR DETAILS.

204 Exist TYPE III-AF SERVICE EQUIPMENT ENCLOSURE.

205 Exist MODEL 170 CONTROLLER ASSEMBLY IN MODEL 334 CABINET.

206 Exist SERVICE CONDUIT AND CONDUCTORS.

207 Exist 1½"C, 2#8 (240 V Ltg), 2#8 (240 V SIGN Ltg).

208 Exist 1½"C, 2#8 (480 V Ltg).

209 Exist 1½"C, 4#8 (480 V Ltg).

210 Exist 1½"C, 8#8 (480 V Ltg).

211 Exist 1½"C, 8#8 (480 V Ltg), 3#14 (PEU).

212 Exist 1½"C, 2#8 (480 V Ltg). ADD 2#8 (480 V Ltg).

213 Exist 1½"C, 4#8 (480 V Ltg). ADD 2#8 (480 V Ltg).

214 TEMPORARY CONNECTION. SEE TYPICAL OVERHEAD DROP INSTALLATION DETAIL ON SHEET ED-7.

215 SEE SHEET ED-4 FOR LOOP LAYOUT DETAILS.

216 INSTALL TEMPORARY WOOD POLE WITH CONDUCTORS OR CABLES, CONDUIT RISER, SIGNAL EQUIPMENT AND OTHER EQUIPMENT AS REQUIRED. SEE STANDARD PLANS RSP ES-18A TO RSP ES-19E FOR DETAILS.

217 Exist 1½"C, 2#6 (120 V RM).

218 Exist 1½"C, 1 TC. RC 1 TC. ADD 1 TC.

219 Exist 1½"C, 2#8 (240 V Ltg), 2#8 (240 V SIGN Ltg).

220 Exist 1½"C, 2 TC. RC 1 TC. ADD 1 TC.

221 Exist 1½"C, 1 TC.

222 Exist 1½"C, 2#6 (120 V RM), 2#10 (METER ON), 2 DLC.

223 Exist 2"C, 1 HCC.

224 Exist 2-3"C, 9#14, 1#8, 2#6 (120 V RM), 2#10 (METER ON), 14 DLC, 1 HCC.

225 Exist 2"C, 6#14, 1#8, 2 DLC.

226 Exist 3"C, 9#14, 1#8, 12 DLC.

227 Exist 1½"C, 2#8 (120 V TDC), 2#10 (METER ON).

228 Exist 1½"C, 2#8 (120 V TDC), 2#10 (METER ON), 2 DLC.

229 Exist 1½"C, 4#6 (120 V RM), 2#10 (METER ON), 2 DLC.

230 Exist 1½"C, 4#6 (120 V RM), 2#8 (120 V TDC).

231 2"C, 2#6 (120 V RM), 2#10 (METER ON), 2 DLC.

232 PULL BACK 1 SIC FROM CONTROLLER CABINET AT N MATHILDA Ave/ROSS Dr (LOCATION 4, "M1" 54+92) TO THIS WOOD POLE AND CONNECT IT TO CONTROLLER CABINET AT N MATHILDA Ave/ROUTE 101 NB OFF-RAMP (LOCATION 3, "M1" 47+24).

233 Exist 2"C, 4#8 (EMS).

234 Exist 2"C, 6#14, 1#8, 11 DLC.

235 Exist 2"C, 9 DLC.

236 Exist 2"C, 3 SIC, 1 TC.

237 Exist 2#8, 1 THERMAL VEHICLE DETECTION CABLE.

238 Exist HAR CONTROLLER ASSEMBLY.

239 Exist 2-3"C, 2#6 (120 V HAR), 1 ANTENNA COAXIAL CABLE.

240 Exist 2"C, 2#6 (120 V HAR).

241 Exist 2-3"C, 2#6 (120 V CCTV), 1 HCC.

242 Exist 2"C, 2#6 (120 V RM), 2#6 (120 V CCTV), 2#6 (120 V HAR), 1 DLC.

243 Exist 1½"C, 2 TC.

244 Exist 2-3"C, 9#14, 1#8, 2#6 (120 V RM), 2#10 (METER ON), 16 DLC.

245 Exist 3"C, 9#14, 1#8, 2#6 (120 V RM), 14 DLC.

246 Exist 3"C, 6#14, 1#8, 2#6 (120 V RM), 11 DLC.

247 Exist 2"C, 2#6 (120 V CCTV), 2#6 (120 V HAR).

248 Exist 2"C, 2#6 (120 V RM), 9 DLC.

249 Exist 3"C, 9#14, 1#8, 13 DLC.

250 Exist 2#6 (120 V RM), 2#10 (METER ON), 1 TC, 2 DLC. RC 2 DLC. ADD 1 DLC.

ELECTRICAL NOTES AND LEGEND (TEMPORARY)

E-46

REVISED BY | DATE REVISED
MENG YANG | DAN YAU
CALCULATED-DESIGNED BY | CHECKED BY
CONSULTANT FUNCTIONAL SUPERVISOR: TIMOTHY J. LEE
STATE OF CALIFORNIA - DEPARTMENT OF TRANSPORTATION

LAST REVISION 00-00-00 | DATE PLOTTED => $DATE | TIME PLOTTED => $TIME

BORDER LAST REVISED 7/2/2010 | USERNAME => $USER | DGN FILE => $REQUEST | RELATIVE BORDER SCALE IS IN INCHES 0 1 2 3 | UNIT 0712 | PROJECT NUMBER & PHASE 0413000204

Dist	COUNTY	ROUTE	POST MILES TOTAL PROJECT	SHEET No.	TOTAL SHEETS
04	SCL	101,237	45.2/45.8, 2.7/3.3	428	736

6-13-18
REGISTERED CIVIL ENGINEER — DATE

KIN Y. CHAN No. 55391 Exp. 12/31/18 CIVIL — REGISTERED PROFESSIONAL ENGINEER — STATE OF CALIFORNIA

6-20-18
PLANS APPROVAL DATE

THE STATE OF CALIFORNIA OR ITS OFFICERS OR AGENTS SHALL NOT BE RESPONSIBLE FOR THE ACCURACY OR COMPLETENESS OF SCANNED COPIES OF THIS PLAN SHEET.

Y&C TRANSPORTATION CONSULTANTS, INC.
3250 Ramos Circle
Sacramento, CA 95827

VTA
3331 N First St
Building B
San Jose, CA 95134

LEGEND: (FOR SHEETS E-49 TO E-165)

251 Exist 2"C, 2#6 (120 V RM), 4#8 (EMS), 2#10 (METER ON), 2 DLC. RC 2 DLC. ADD 1 DLC.

252 Exist 2#8, 1 SIC, 1 THERMAL VEHICLE DETECTION CABLE.

253 Exist 2-3"C, 9#14, 1#8, 2#6 (120 V RM), 4#8 (EMS), 2#10 (METER ON), 15 DLC. RC 2 DLC. ADD 2 DLC.

254 Exist 1½"C, 2 TC. RC 2 TC. ADD 2 TC.

255 Exist 2#6 (120 V RM), 1 TC. RC 1 TC. ADD 1 TC.

256 Exist 2#6 (120 V RM), 2#10 (METER ON), 1 TC, 1 DLC. RC 1 TC. ADD 1 TC, 1 DLC.

257 Exist 3"C, 1 SIC, 1 SMFO CABLE (12-STRAND).

258 INSTALL CONDUIT 30" BELOW PAVEMENT.

259 AB Exist VEHICLE DETECTOR LOOPS IN THESE LANES.

260 PERMANENT WORK. THIS WORK IS PART OF BID ITEM "MODIFYING EXISTING ELECTRICAL SYSTEM". SEE SHEETS E-5 TO E-17 FOR DETAILS.

261 Exist 2"C, 2#6 (120 V RM), 9 DLC. RC 9 DLC. ADD 9 DLC.

262 Exist 2"C, 2#6 (120 V RM), 2#6 (120 V CCTV), 2#6 (120 V HAR), 1 DLC. RC 1 DLC. ADD 1 DLC.

263 2"C, 2#6 (120 V RM), 2#6 (120 V CCTV), 2#6 (120 V HAR), 1 DLC.

264 2"C, 2 TC.

265 2"C, 2#6 (120 V RM), 2#6 (120 V CCTV), 2#6 (120 V HAR).

266 Exist 2"C, 2#6 (120 V RM), 2#6 (120 V HAR), 2#6 (120 V CCTV), 2#10 (120 V TDC).

267 INSTALL APS TO WOOD POLE.

268 Exist 2"C, 2#6 (120 V RM), 2#6 (120 V CCTV), 2#6 (120 V HAR).

269 INSTALL 12' LMA UNLESS OTHERWISE NOTED, 165 W LED Lum AND OTHER EQUIPMENT AS REQUIRED ON Exist TEMPORARY WOOD POLE. SEE STANDARD PLAN RSP ES-18A TO RSP ES-19E FOR DETAILS.

270 ADD 2#8 (480 V Ltg).

271 Exist 1½"C, 2#8 (240 V Ltg), 2#8 (240 V SIGN Ltg), 3#14 (PEU).

272 Exist 1½"C, 2#8 (240 V Ltg), 2#8 (240 V SIGN Ltg). RC 4#8. ADD 4#8.

273 INSTALL TEMPORARY WOOD POLE WITH CONDUCTORS OR CABLES, CONDUIT RISER, 12' LMA UNLESS OTHERWISE NOTED, 165 W LED Lum, SIGNAL EQUIPMENT AND OTHER EQUIPMENT AS REQUIRED. SEE STANDARD PLAN RSP ES-18A TO RSP ES-19E FOR DETAILS.

274 PULL BACK 2 SIC FROM Exist CONTROLLER CABINET AT "M1" 55+20 TO THIS PULL BOX. REINSTALL 2 SIC IN NEW AND Exist CONDUITS AND OVERHEAD MESSENGER WIRE AS INDICATED.

275 Exist 2"C, 2 SIC. REINSTALL 2 SIC. SEE NOTE 274.

276 Exist MODEL 2070LDX CONTROLLER ASSEMBLY IN MODEL 332 CABINET.

277 Exist 2"C, 2#8 (240 V Ltg). RC 2#8. ADD 2#8.

278 INSTALL OVERHEAD TETHER WIRE. SEE STANDARD PLAN RSP ES-18A TO RSP ES-19E FOR DETAILS.

279 INSTALL VEHICLE SIGNAL HEAD TO OVERHEAD TETHER WIRE AS INDICATED ON THE PLAN. SEE STANDARD PLAN RSP ES-18A TO RSP ES-19E FOR DETAILS.

280 Exist 2"C, 1 SIC.

281 COVER Exist VEHICLE SIGNAL HEAD.

282 INSTALL SIGN TO OVERHEAD TETHER WIRE.

283 UNCOVER Exist VEHICLE SIGNAL HEAD.

284 Exist 2"C, 2 SIC. RC 1 SIC. ADD 1 SIC.

285 INSTALL VEHICLE SIGNAL HEAD TO WOOD POLE.

286 COVER Exist PEDESTRIAN SIGNAL HEAD.

287 COVER Exist PEDESTRIAN PUSH BUTTON ASSEMBLY.

288 PERMANENT WORK. THIS WORK IS PART OF BID ITEM "SIGNAL AND LIGHTING". SEE SHEETS E-23 TO E-45 FOR DETAILS.

289 FURNISH AND INSTALL MODEL 2070LDX CONTROLLER UNIT WITH MODEL 332L CONTROLLER CABINET AND FIBER OPTIC ETHERNET SWITCH AND NETWORK EQUIPMENT.

290 INSTALL THERMAL DETECTION CAMERA TO WOOD POLE.

291 UNCOVER Exist PEDESTRIAN SIGNAL HEAD.

292 UNCOVER PEDESTRIAN PUSH BUTTON ASSEMBLY.

293 INSTALL PEDESTRIAN SIGNAL HEAD TO WOOD POLE.

294 INSTALL PEDESTRIAN PUSH BUTTON ASSEMBLY TO WOOD POLE.

295 Exist 2"C, 2 SIC.

296 Exist STAND ALONE BBS CABINET.

297 ADJUST VEHICLE SIGNAL HEAD FOR STAGE LANE CONFIGURATION.

298 INSTALL TYPE III-AF SERVICE EQUIPMENT ENCLOSURE.

299 Exist 2-3"C, 9#14, 1#8, 2#6 (120 V RM), 16 DLC. RC 14 DLC. ADD 1 TC, 14 DLC.

300 Exist 3"C, 9#14, 1#8, 2#6 (120 V RM), 14 DLC. RC 12 DLC. ADD 1 TC, 12 DLC.

301 Exist 2"C, 2 SIC. RC 2 SIC. ADD 2 SIC.

302 AB CONDUIT IN STAGE 1 PHASE 3.

303 Exist 3"C, 2 SIC.

304 Exist 2"C, 3 SIC.

305 INSTALL THERMAL DETECTION CAMERA TO SMA.

306 COVERED VEHICLE SIGNAL HEAD TO REMAIN.

307 INSTALL 4-SECTION VEHICLE SIGNAL HEAD. SEE DETAIL A ON SHEET E-112.

308 6#14, 1#8, 2#6 (120 V RM), 1 TC, 11 DLC.

309 Exist 2"C, 3 SIC, 1 TC. RC 2 SIC.

310 3"C, 6#14, 1#8, 2#6 (120 V RM), 11 DLC.

311 INSTALL PULL BOX PER SERVICE UTILITY REQUIREMENTS.

312 Exist 1½"C, 2#10 (METER ON), 2 DLC. RC 2 DLC. ADD 2 DLC.

313 Exist CONDUIT. RC CONDUCTORS. ADD 1 SIC

314 PULL BACK 1 SIC FROM CONTROLLER CABINET AT N MATHILDA Ave/ROSS Dr (LOCATION 4, "M1" 54+92) TO THIS WOOD POLE AND CONNECT IT BACK THROUGH OVERHEAD MESSENGER WIRES AND CONDUITS AS INDICATED.

315 Exist 2-3"C, 9#14, 1#8, 2#6 (120 V RM), 2#10 (120 V FB), 16 DLC, 1 TC. RC 1 DLC. ADD 1 DLC.

316 COVER Ped Sig HEAD IN STAGE 2 PHASE 4 AND UNCOVER IT FOR STAGE 3.

317 COIL 200' OF SIC IN THIS PULL BOX FOR NEXT PHASE.

318 INSTALL NRT SIGN TO WOOD POLE.

319 Exist 2-3"C, 9#14, 1#8, 2#6 (120 V RM), 2#10 (METER ON), 16 DLC. RC 2 DLC. ADD 2 DLC.

320 CONNECT Exist VEHICLE SIGNAL HEAD TO NEW PHASE AS INDICATED ON THE PLAN.

321 PERMANENT WORK. THIS WORK IS PART OF BID ITEM "LIGHTING (CITY STREET)". SEE SHEETS E-18 TO E-22 FOR DETAILS.

322 Exist 2"C, 1 SIC, 1 TC.

323 Exist 3"C, 2#8 Ltg, 1 DLC, SIGNAL CONDUCTORS AND CABLE. RC 1 DLC, SIGNAL CONDUCTORS AND CABLES. ADD 1 DLC.

324 Exist 1½"C, PT.

325 Exist 3"C, 9#14, 1#8, 2#6 (120 V RM), 14 DLC, 1 TC.

326 Exist 6#14, 1#8, 2#6, 11 DLC, 1 TC.

327 Exist 2#10, 2 DLC. RC 1 DLC. ADD 1 DLC.

LEGEND (TEMPORARY)

E-47

REVISED BY | DATE REVISED
MENG YANG | DAN YAU
CALCULATED-DESIGNED BY | CHECKED BY
CONSULTANT FUNCTIONAL SUPERVISOR: TIMOTHY J. LEE
STATE OF CALIFORNIA - DEPARTMENT OF TRANSPORTATION
Gates

LAST REVISION 00-00-00 | DATE PLOTTED => $DATE | TIME PLOTTED => $TIME

BORDER LAST REVISED 7/2/2010 | USERNAME => $USER | DGN FILE => $REQUEST | RELATIVE BORDER SCALE IS IN INCHES 0 1 2 3 | UNIT 0712 | PROJECT NUMBER & PHASE 0413000204

Dist	COUNTY	ROUTE	POST MILES TOTAL PROJECT	SHEET No.	TOTAL SHEETS
04	SCL	101,237	45.2/45.8, 2.7/3.3	429	736

6-13-18
REGISTERED CIVIL ENGINEER — DATE

6-20-18
PLANS APPROVAL DATE

REGISTERED PROFESSIONAL ENGINEER
KIN Y. CHAN
No. 55391
Exp. 12/31/18
CIVIL
STATE OF CALIFORNIA

THE STATE OF CALIFORNIA OR ITS OFFICERS OR AGENTS SHALL NOT BE RESPONSIBLE FOR THE ACCURACY OR COMPLETENESS OF SCANNED COPIES OF THIS PLAN SHEET.

Y&C TRANSPORTATION CONSULTANTS, INC.
3250 Ramos Circle
Sacramento, CA 95827

VTA
3331 N First St
Building B
San Jose, CA 95134

LEGEND: (FOR SHEETS E-49 TO E-165)

328 Exist 3"C, 1 SMFO CABLE (144-STRAND)

329 Exist 3"C, 1 SIC, 2 SMFO CABLES (12-STRAND).

330 REPROGRAM DETECTION ZONE.

331 PROTECT Exist EQUIPMENT IN PLACE DURING STAGE CONSTRUCTION.

332 Exist 170E CONTROLLER ASSEMBLY IN TYPE P CABINET.

333 Exist 2"C, 1 SIC. ADD 1 DLC.

334 2#8, 1 THERMAL VEHICLE DETECTION CABLE.

335 COIL 25' OF EACH SIC (TOTAL 2) IN THIS PULL BOX.

336 Exist 2#8 (480 V Ltg).

337 INSTALL NRT SIGN TO Exist SIGNAL POLE.

338 Exist TRAFFIC SIGNAL CONTROLLER ASSEMBLY.

339 Exist TYPE III SERVICE EQUIPMENT ENCLOSURE.

340 Exist 2"C, 1 SIC. RC 1 SIC. ADD 1 SIC.

341 Exist 3"C, 2 SIC. RC 1 SIC. ADD 1 SIC.

342 Exist CONDUIT AND CONDUCTORS.

343 Exist 2"C, 3#8 (Ltg), 3#14 (PEU), 4#14 (IISNS).

344 Exist 1½"C, 3#14 (PEU).

345 Exist 1½"C, 4#8 AND 4#14 (Ltg & IISNS).

346 UNCOVER Exist SIGN.

347 Exist CONDUIT, 1 TC.

348 RC WOOD POLE IN STAGE 1 PHASE 3.

349 Exist 2'C, 3 SIC. RC 3 SIC. ADD 1 SIC.

350 COVER Exist SIGN.

351 REPLACE Exist Veh Sig HEAD WITH NEW Veh Sig HEAD AS INDICATED ON THE PLAN.

352 4 DLC, 1 SIC.

353 2#8, 4 DLC, 1 SIC.

354 Exist OVERHEAD MESSENGER WIRE. PROVIDE CONDUCTORS/CABLES AS INDICATED ON THE PLAN. SEE STANDARD PLAN RSP ES-18A TO RSP ES-19E FOR DETAILS.

355 INSTALL THERMAL DETECTION CAMERA TO LMA.

356 INSTALL 12' LMA UNLESS OTHERWISE NOTED, 165 W LED Lum, SIGNAL EQUIPMENT AND OTHER EQUIPMENT AS REQUIRED ON Exist TEMPORARY WOOD POLE. SEE STANDARD PLAN RSP ES-18A TO RSP ES-19E FOR DETAILS.

357 INSTALL 2070 CONTROLLER ASSEMBLY WITH MODEL 332 CABINET ON TEMPORARY WOOD PLATFORM. SEE DETAIL ON SHEET E-104.

358 PULL BACK 1 SIC FROM CONTROLLER CABINET AT N MATHILDA Ave/ALMANOR Ave (LOCATION 1, "M1" 30+11) TO THIS WOOD POLE AND CONNECT IT TO CONTROLLER CABINET AT N MATHILDA Ave/ROUTE 101 SB OFF-RAMP (LOCATION 2, "M1" 37+87).

359 Exist 1 SIC. ADD 2#8, 1 THERMAL VEHICLE DETECTION CABLE.

360 Exist 1 SIC. RC 1 SIC, ADD 1 SIC FROM CONTROLLER CABINET AT N MATHILDA Ave/ROUTE 101 SB OFF-RAMP (LOCATION 2, "M1" 37+87) TO CONTROLLER CABINET AT N MATHILDA Ave/ALMANOR Ave (LOCATION 1, "M1" 30+11).

361 Exist 1 SIC. RC 1 SIC. ADD 1 SIC

362 COORDINATE WITH PG&E FOR SERVICE CONNECTION.

363 CONTRACTOR SHALL USE CAUTION WHEN INSTALLING EQUIPMENT NEAR UTILITIES.

364 COIL 50' OF EACH SIC (TOTAL 2) TO TOP OF POLE.

365 INSTALL RELOCATED RED LIGHT ENFORCEMENT UNIT TO SIGNAL MOUNTING FOR Ø5 LEFT TURN TRAFFIC RED LIGHT ENFORCEMENT. SEE DETAIL A ON SHEET E-124.

366 Exist 2070 CONTROLLER ASSEMBLY WITH MODEL 332 CABINET.

367 Exist OVERHEAD TETHER WIRE.

LEGEND (TEMPORARY)

E-48

REVISED BY | DATE REVISED
MENG YANG | DAN YAU
CALCULATED-DESIGNED BY | CHECKED BY
CONSULTANT FUNCTIONAL SUPERVISOR: TIMOTHY J.LEE
STATE OF CALIFORNIA - DEPARTMENT OF TRANSPORTATION Caltrans

LAST REVISION 00-00-00 | DATE PLOTTED => $DATE | TIME PLOTTED => $TIME

BORDER LAST REVISED 7/2/2010 | USERNAME => $USER | DGN FILE => $REQUEST | RELATIVE BORDER SCALE IS IN INCHES 0 1 2 3 | UNIT 0712 | PROJECT NUMBER & PHASE 0413000204

NOTE:

FOR ACCURATE RIGHT OF WAY DATA, CONTACT
RIGHT OF WAY ENGINEERING AT THE DISTRICT OFFICE.

Dist	COUNTY	ROUTE	POST MILES TOTAL PROJECT	SHEET No.	TOTAL SHEETS
04	SCL	101,237	45.2/45.8, 2.7/3.3	430	736

6-13-18
REGISTERED CIVIL ENGINEER — DATE

KIN Y. CHAN
No. 55391
Exp. 12/31/18
CIVIL
REGISTERED PROFESSIONAL ENGINEER
STATE OF CALIFORNIA

6-20-18
PLANS APPROVAL DATE

THE STATE OF CALIFORNIA OR ITS OFFICERS OR AGENTS SHALL NOT BE RESPONSIBLE FOR THE ACCURACY OR COMPLETENESS OF SCANNED COPIES OF THIS PLAN SHEET.

Y&C TRANSPORTATION CONSULTANTS, INC.
3250 Ramos Circle
Sacramento, CA 95827

VTA
3331 N First St
Building B
San Jose, CA 95134

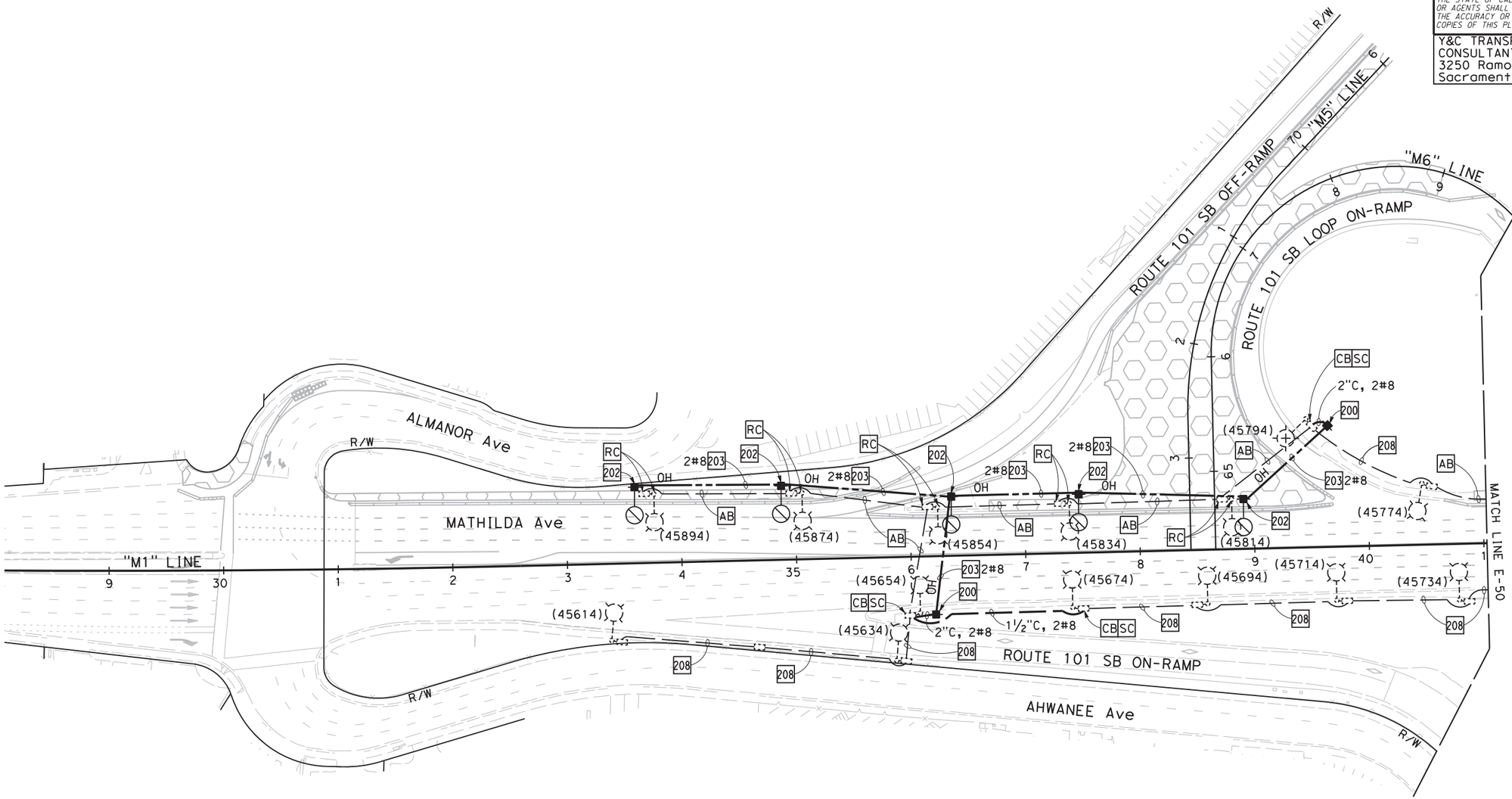

FOR NOTES AND LEGEND, SEE SHEETS E-46 TO E-48

APPROVED FOR ELECTRICAL WORK ONLY

TEMPORARY LIGHTING SYSTEM
(STAGE 1 PHASE 2)
SCALE: 1" = 50'

E-49

STATE OF CALIFORNIA - DEPARTMENT OF TRANSPORTATION
Caltrans
CONSULTANT FUNCTIONAL SUPERVISOR: TIMOTHY J. LEE
CALCULATED-DESIGNED BY: MENG YANG
CHECKED BY: DAN YAU
REVISED BY
DATE REVISED
LAST REVISION 00-00-00
DATE PLOTTED => $DATE
TIME PLOTTED => $TIME

BORDER LAST REVISED 7/2/2010
USERNAME => $USER
DGN FILE => $REQUEST
RELATIVE BORDER SCALE IS IN INCHES 0 1 2 3
UNIT 0712
PROJECT NUMBER & PHASE 0413000204

NOTE:

FOR ACCURATE RIGHT OF WAY DATA, CONTACT
RIGHT OF WAY ENGINEERING AT THE DISTRICT OFFICE.

Dist	COUNTY	ROUTE	POST MILES TOTAL PROJECT	SHEET No.	TOTAL SHEETS
04	SCL	101,237	45.2/45.8, 2.7/3.3	431	736

6-13-18
REGISTERED CIVIL ENGINEER — DATE

REGISTERED PROFESSIONAL ENGINEER
KIN Y. CHAN
No. 55391
Exp. 12/31/18
CIVIL
STATE OF CALIFORNIA

6-20-18
PLANS APPROVAL DATE

THE STATE OF CALIFORNIA OR ITS OFFICERS OR AGENTS SHALL NOT BE RESPONSIBLE FOR THE ACCURACY OR COMPLETENESS OF SCANNED COPIES OF THIS PLAN SHEET.

Y&C TRANSPORTATION CONSULTANTS, INC.
3250 Ramos Circle
Sacramento, CA 95827

VTA
3331 N First St
Building B
San Jose, CA 95134

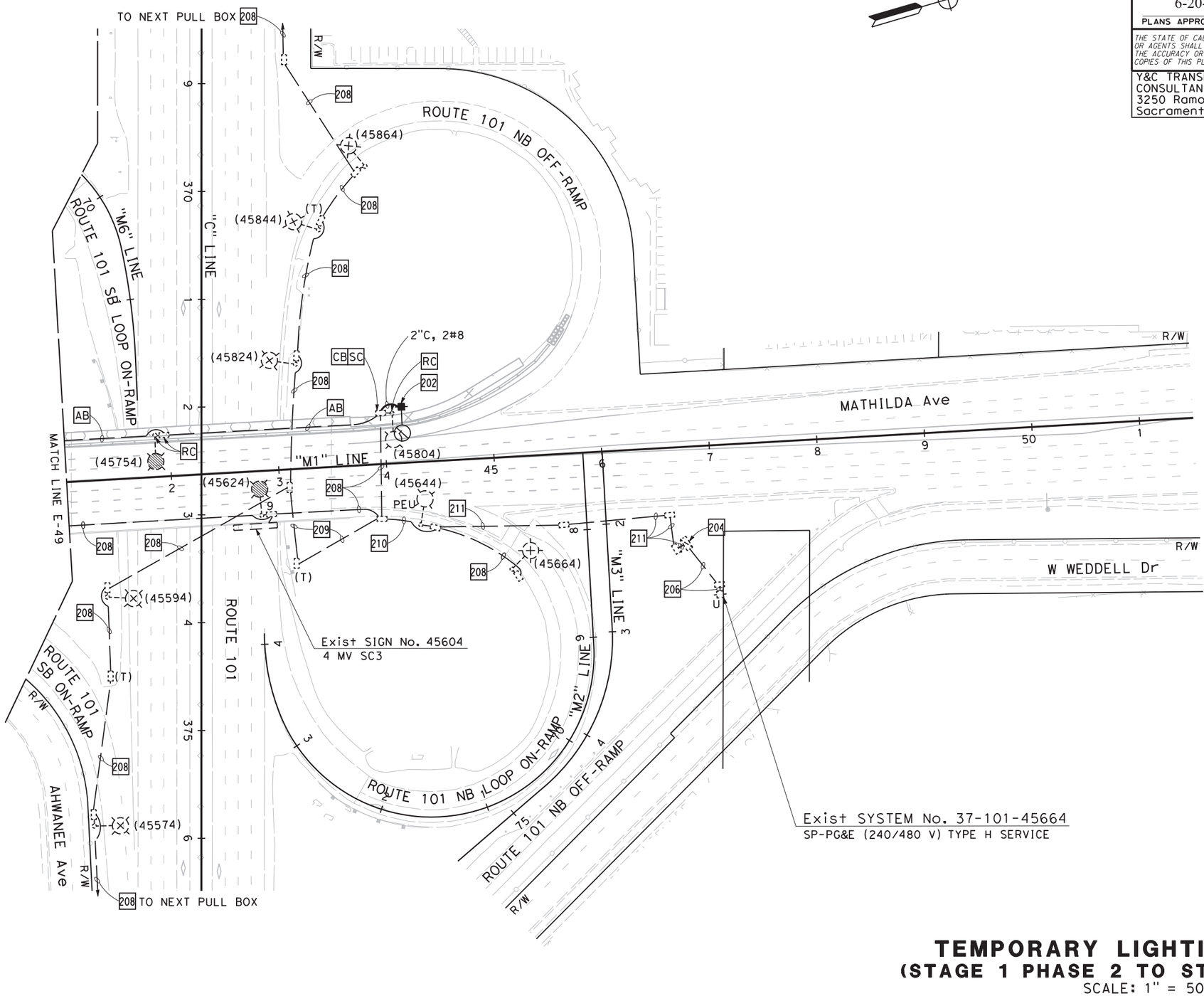

FOR NOTES AND LEGEND, SEE SHEETS E-46 TO E-48

TEMPORARY LIGHTING SYSTEM
(STAGE 1 PHASE 2 TO STAGE 1 PHASE 4)

SCALE: 1" = 50'

E-50

APPROVED FOR ELECTRICAL WORK ONLY

CALCULATED-DESIGNED BY	MENG YANG	
CHECKED BY	DAN YAU	
CONSULTANT FUNCTIONAL SUPERVISOR	TIMOTHY J. LEE	
REVISED BY	DATE REVISED	

STATE OF CALIFORNIA - DEPARTMENT OF TRANSPORTATION
Caltrans

LAST REVISION 00-00-00
DATE PLOTTED => $DATE
TIME PLOTTED => $TIME

BORDER LAST REVISED 7/2/2010
USERNAME => $USER
DGN FILE => $REQUEST
RELATIVE BORDER SCALE IS IN INCHES 0 1 2 3
UNIT 0712
PROJECT NUMBER & PHASE 0413000204

NOTE:

FOR ACCURATE RIGHT OF WAY DATA, CONTACT
RIGHT OF WAY ENGINEERING AT THE DISTRICT OFFICE.

Dist	COUNTY	ROUTE	POST MILES TOTAL PROJECT	SHEET No.	TOTAL SHEETS
04	SCL	101,237	45.2/45.8, 2.7/3.3	432	736

6-13-18
REGISTERED CIVIL ENGINEER DATE

REGISTERED PROFESSIONAL ENGINEER
KIN Y. CHAN
No. 55391
Exp. 12/31/18
CIVIL
STATE OF CALIFORNIA

6-20-18
PLANS APPROVAL DATE

THE STATE OF CALIFORNIA OR ITS OFFICERS OR AGENTS SHALL NOT BE RESPONSIBLE FOR THE ACCURACY OR COMPLETENESS OF SCANNED COPIES OF THIS PLAN SHEET.

Y&C TRANSPORTATION
CONSULTANTS, INC.
3250 Ramos Circle
Sacramento, CA 95827

VTA
3331 N First St
Building B
San Jose, CA 95134

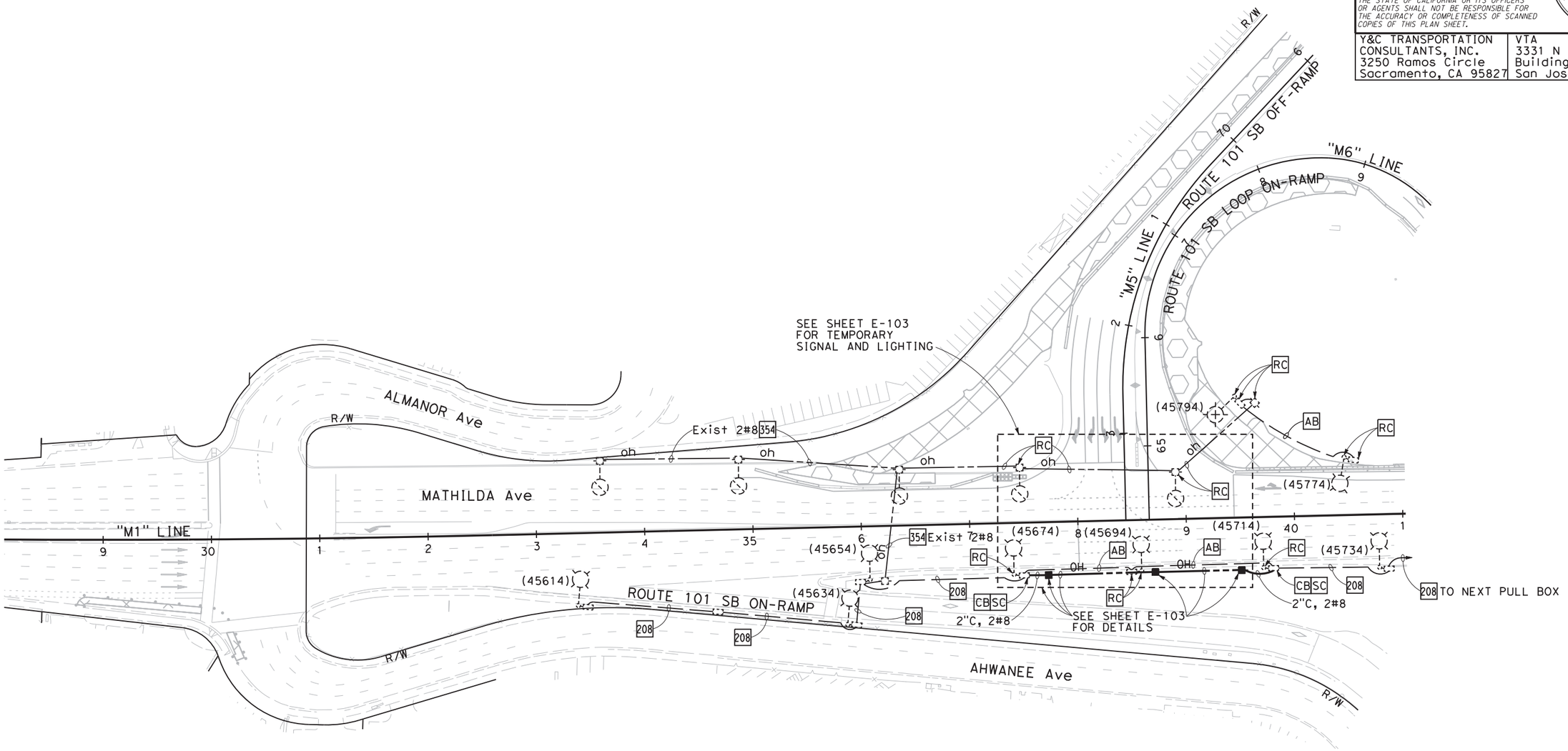

FOR NOTES AND LEGEND, SEE SHEETS E-46 TO E-48

APPROVED FOR ELECTRICAL WORK ONLY

TEMPORARY LIGHTING SYSTEM
(STAGE 1 PHASE 3 TO STAGE 2 PHASE 1)

SCALE: 1" = 50'

E-51

STATE OF CALIFORNIA - DEPARTMENT OF TRANSPORTATION
CONSULTANT FUNCTIONAL SUPERVISOR: TIMOTHY J.LEE
CALCULATED-DESIGNED BY: MENG YANG
CHECKED BY: DAN YAU
REVISED BY
DATE REVISED

LAST REVISION 00-00-00
DATE PLOTTED => $DATE
TIME PLOTTED => $TIME

BORDER LAST REVISED 7/2/2010
USERNAME => $USER
DGN FILE => $REQUEST
RELATIVE BORDER SCALE IS IN INCHES 0 1 2 3
UNIT 0712
PROJECT NUMBER & PHASE 0413000204

Dist	COUNTY	ROUTE	POST MILES TOTAL PROJECT	SHEET No.	TOTAL SHEETS
04	SCL	101,237	45.2/45.8, 2.7/3.3	433	736

6-13-18
REGISTERED CIVIL ENGINEER — DATE

KIN Y. CHAN
No. 55391
Exp. 12/31/18
CIVIL
REGISTERED PROFESSIONAL ENGINEER
STATE OF CALIFORNIA

6-20-18
PLANS APPROVAL DATE

THE STATE OF CALIFORNIA OR ITS OFFICERS OR AGENTS SHALL NOT BE RESPONSIBLE FOR THE ACCURACY OR COMPLETENESS OF SCANNED COPIES OF THIS PLAN SHEET.

Y&C TRANSPORTATION CONSULTANTS, INC.
3250 Ramos Circle
Sacramento, CA 95827

VTA
3331 N First St
Building B
San Jose, CA 95134

NOTE:
FOR ACCURATE RIGHT OF WAY DATA, CONTACT RIGHT OF WAY ENGINEERING AT THE DISTRICT OFFICE.

NOTE FOR REVIEWER:
LIGHTING ON MEDIAN SHOWS ON SR 237 EXPRESS LANE PROJECT

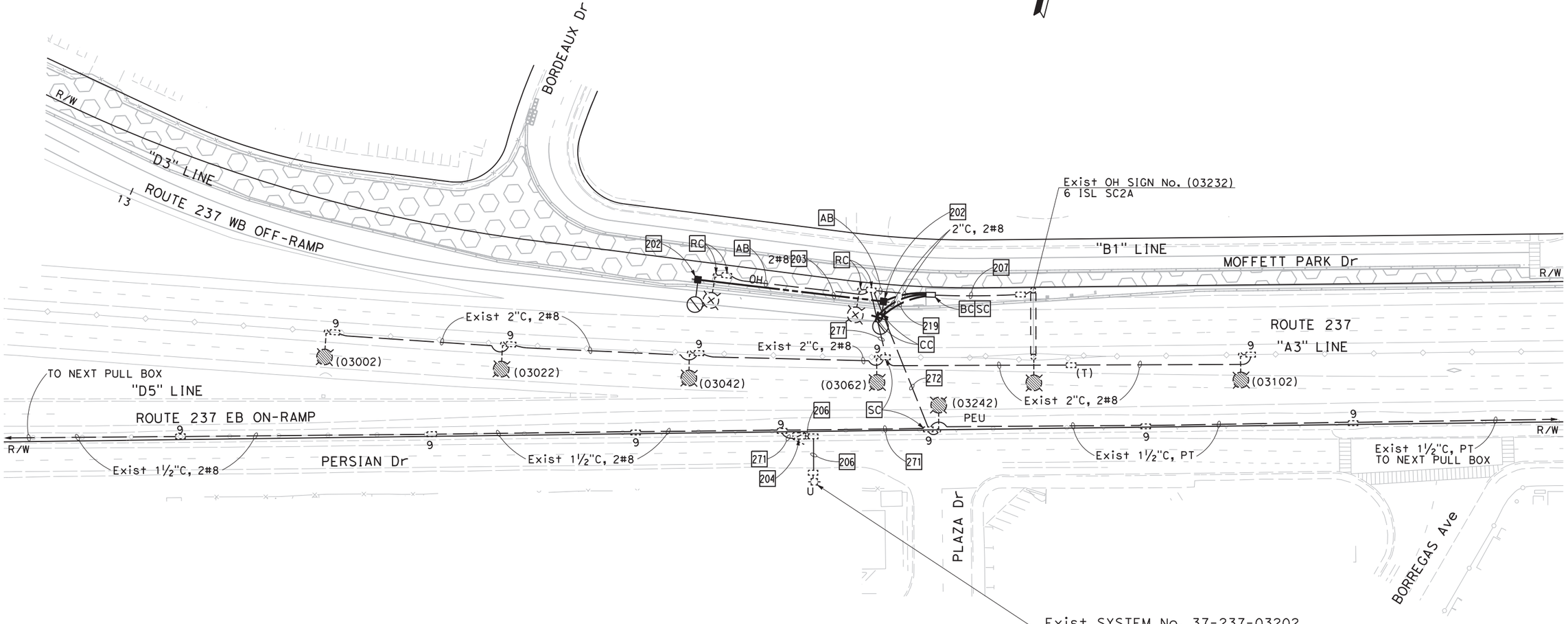

TEMPORARY LIGHTING SYSTEM
(STAGE 1 PHASE 3)
SCALE: 1" = 50'

E-52

FOR NOTES AND LEGEND, SEE SHEETS E-46 TO E-48

APPROVED FOR ELECTRICAL WORK ONLY

MENG YANG — CALCULATED-DESIGNED BY
DAN YAU — CHECKED BY
TIMOTHY J. LEE — CONSULTANT FUNCTIONAL SUPERVISOR
STATE OF CALIFORNIA - DEPARTMENT OF TRANSPORTATION — Caltrans®
REVISED BY — DATE REVISED
LAST REVISION — DATE PLOTTED => $DATE — TIME PLOTTED => $TIME — 00-00-00

BORDER LAST REVISED 7/2/2010
USERNAME => $USER
DGN FILE => $REQUEST
RELATIVE BORDER SCALE IS IN INCHES 0 1 2 3
UNIT 0712
PROJECT NUMBER & PHASE 0413000204

Dist	COUNTY	ROUTE	POST MILES TOTAL PROJECT	SHEET No.	TOTAL SHEETS
04	SCL	101,237	45.2/45.8, 2.7/3.3	434	736

REGISTERED CIVIL ENGINEER — DATE 6-13-18

PLANS APPROVAL DATE 6-20-18

REGISTERED PROFESSIONAL ENGINEER — KIN Y. CHAN No. 55391 Exp. 12/31/18 CIVIL — STATE OF CALIFORNIA

THE STATE OF CALIFORNIA OR ITS OFFICERS OR AGENTS SHALL NOT BE RESPONSIBLE FOR THE ACCURACY OR COMPLETENESS OF SCANNED COPIES OF THIS PLAN SHEET.

Y&C TRANSPORTATION CONSULTANTS, INC.
3250 Ramos Circle
Sacramento, CA 95827

VTA
3331 N First St
Building B
San Jose, CA 95134

NOTE:

FOR ACCURATE RIGHT OF WAY DATA, CONTACT RIGHT OF WAY ENGINEERING AT THE DISTRICT OFFICE.

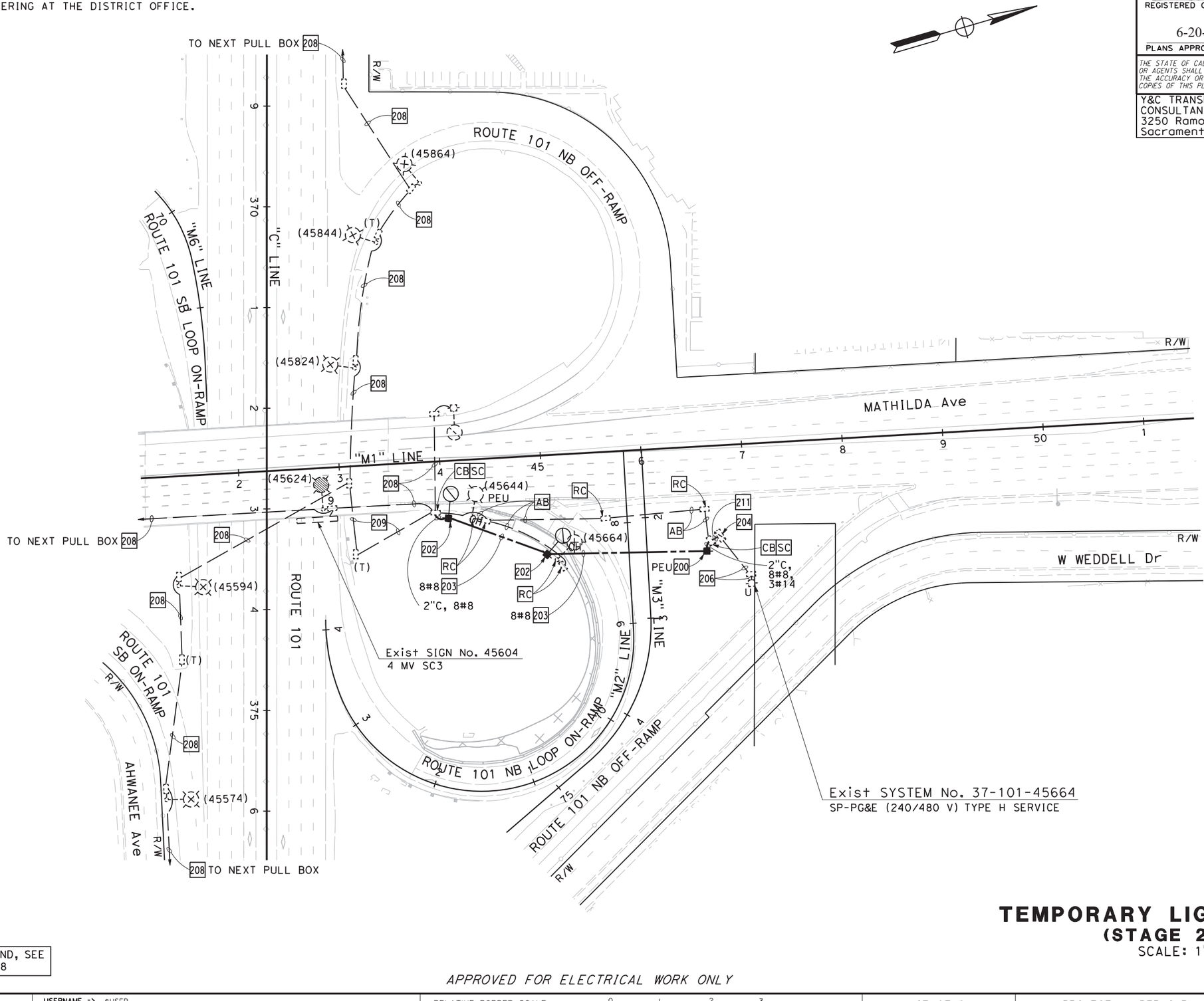

FOR NOTES AND LEGEND, SEE SHEETS E-46 TO E-48

TEMPORARY LIGHTING SYSTEM
(STAGE 2 PHASE 1)

SCALE: 1" = 50'

E-53

APPROVED FOR ELECTRICAL WORK ONLY

STATE OF CALIFORNIA - DEPARTMENT OF TRANSPORTATION — Caltrans

CONSULTANT FUNCTIONAL SUPERVISOR: TIMOTHY J. LEE

CALCULATED-DESIGNED BY: MENG YANG

CHECKED BY: DAN YAU

REVISED BY | DATE REVISED

LAST REVISION 00-00-00 — DATE PLOTTED => $DATE — TIME PLOTTED => $TIME

BORDER LAST REVISED 7/2/2010

USERNAME => $USER
DGN FILE => $REQUEST

RELATIVE BORDER SCALE IS IN INCHES 0 1 2 3

UNIT 0712

PROJECT NUMBER & PHASE 0413000204

NOTE:

FOR ACCURATE RIGHT OF WAY DATA, CONTACT
RIGHT OF WAY ENGINEERING AT THE DISTRICT OFFICE.

Dist	COUNTY	ROUTE	POST MILES TOTAL PROJECT	SHEET No.	TOTAL SHEETS
04	SCL	101,237	45.2/45.8, 2.7/3.3	435	736

6-13-18
REGISTERED CIVIL ENGINEER DATE

6-20-18
PLANS APPROVAL DATE

REGISTERED PROFESSIONAL ENGINEER
KIN Y. CHAN
No. 55391
Exp. 12/31/18
CIVIL
STATE OF CALIFORNIA

THE STATE OF CALIFORNIA OR ITS OFFICERS OR AGENTS SHALL NOT BE RESPONSIBLE FOR THE ACCURACY OR COMPLETENESS OF SCANNED COPIES OF THIS PLAN SHEET.

Y&C TRANSPORTATION CONSULTANTS, INC.
3250 Ramos Circle
Sacramento, CA 95827

VTA
3331 N First St
Building B
San Jose, CA 95134

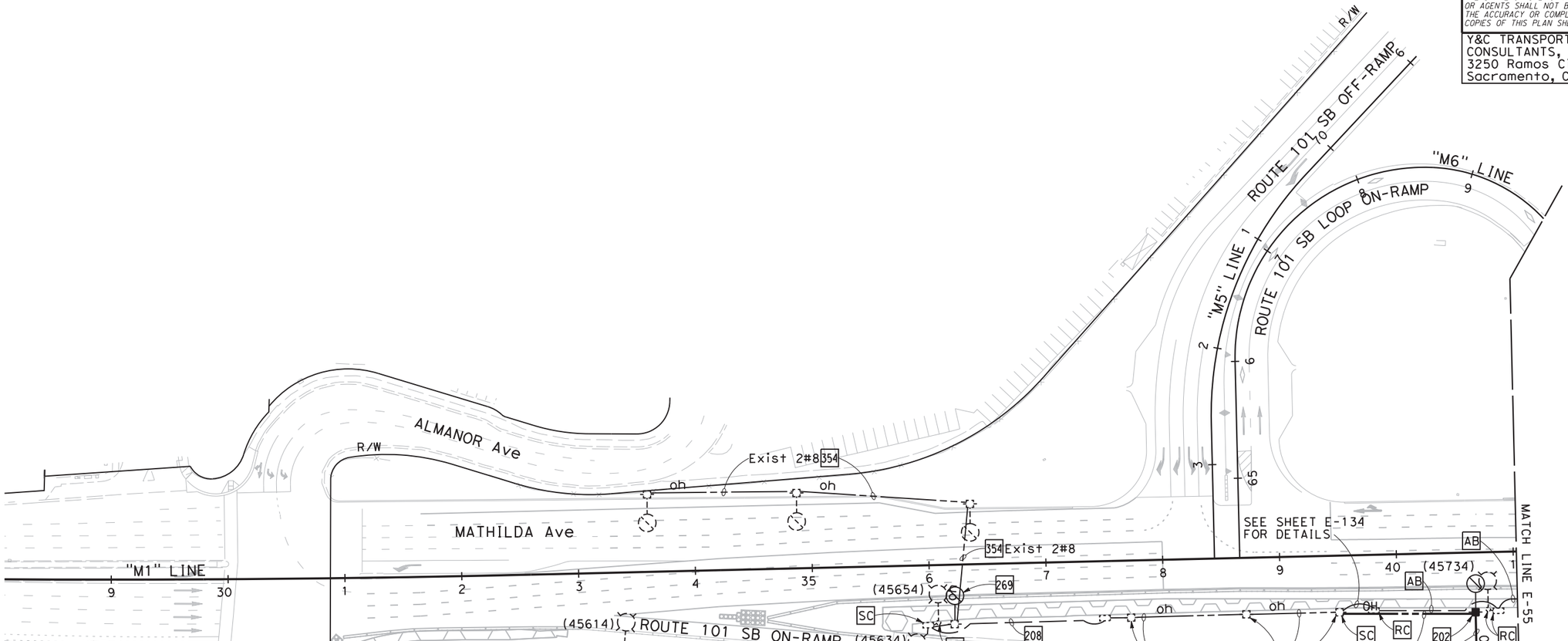

FOR NOTES AND LEGEND, SEE SHEETS E-46 TO E-48

APPROVED FOR ELECTRICAL WORK ONLY

TEMPORARY LIGHTING SYSTEM
(STAGE 2 PHASE 2)

SCALE: 1" = 50'

E-54

CALCULATED-DESIGNED BY: MENG YANG
CHECKED BY: DAN YAU
REVISED BY
DATE REVISED
CONSULTANT FUNCTIONAL SUPERVISOR: TIMOTHY J. LEE
STATE OF CALIFORNIA - DEPARTMENT OF TRANSPORTATION
Caltrans

LAST REVISION 00-00-00
DATE PLOTTED => $DATE
TIME PLOTTED => $TIME

BORDER LAST REVISED 7/2/2010
USERNAME => $USER
DGN FILE => $REQUEST
RELATIVE BORDER SCALE IS IN INCHES 0 1 2 3
UNIT 0712
PROJECT NUMBER & PHASE 0413000204

NOTE:

FOR ACCURATE RIGHT OF WAY DATA, CONTACT
RIGHT OF WAY ENGINEERING AT THE DISTRICT OFFICE.

Dist	COUNTY	ROUTE	POST MILES TOTAL PROJECT	SHEET No.	TOTAL SHEETS
04	SCL	101,237	45.2/45.8, 2.7/3.3	436	736

6-13-18
REGISTERED CIVIL ENGINEER — DATE

REGISTERED PROFESSIONAL ENGINEER
KIN Y. CHAN
No. 55391
Exp. 12/31/18
CIVIL
STATE OF CALIFORNIA

6-20-18
PLANS APPROVAL DATE

THE STATE OF CALIFORNIA OR ITS OFFICERS OR AGENTS SHALL NOT BE RESPONSIBLE FOR THE ACCURACY OR COMPLETENESS OF SCANNED COPIES OF THIS PLAN SHEET.

Y&C TRANSPORTATION CONSULTANTS, INC.
3250 Ramos Circle
Sacramento, CA 95827

VTA
3331 N First St
Building B
San Jose, CA 95134

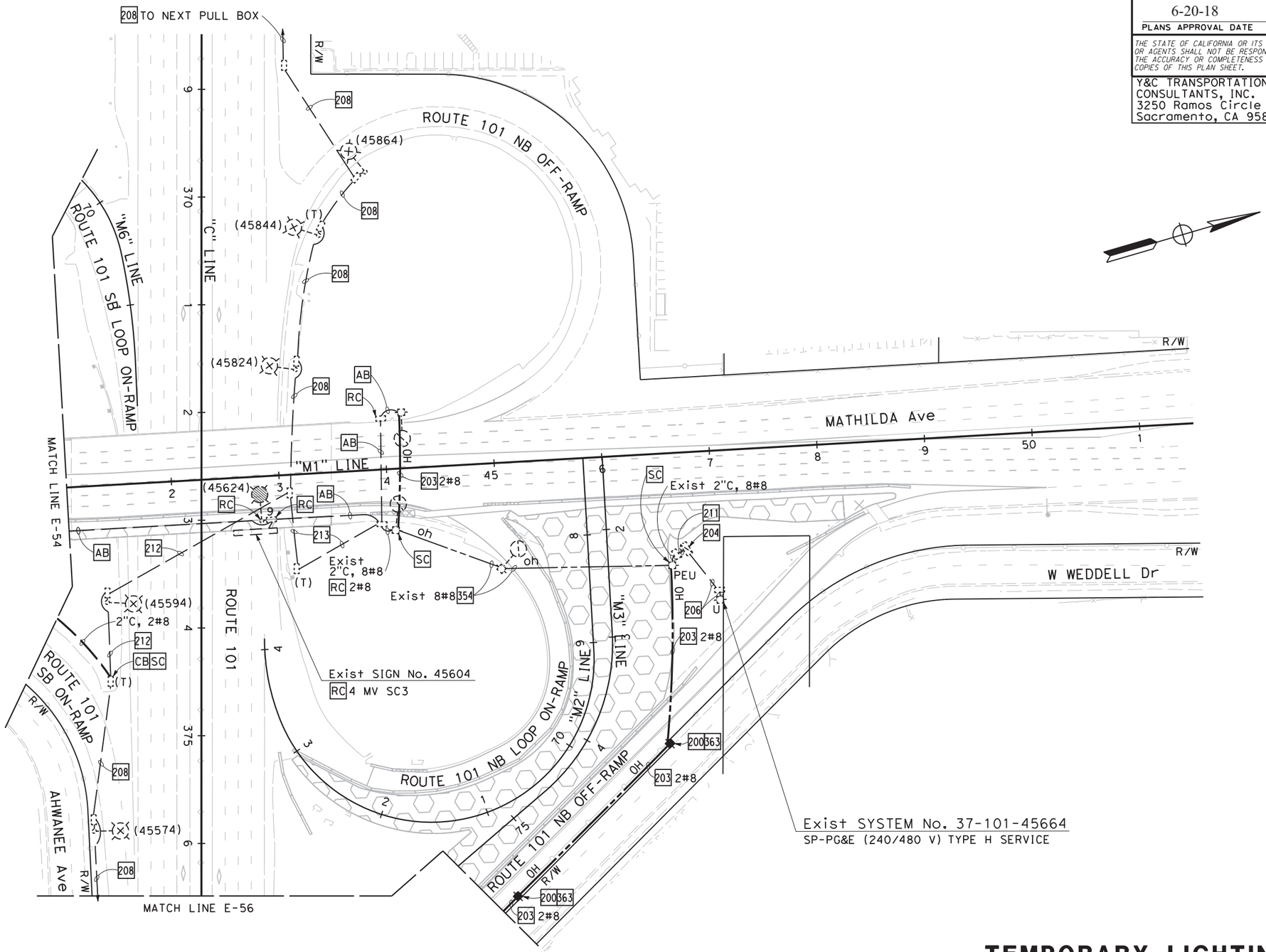

FOR NOTES AND LEGEND, SEE SHEETS E-46 TO E-48

TEMPORARY LIGHTING SYSTEM
(STAGE 2 PHASE 2)

SCALE: 1" = 50'

E-55

APPROVED FOR ELECTRICAL WORK ONLY

CALCULATED-DESIGNED BY: MENG YANG
CHECKED BY: DAN YAU
REVISED BY / DATE REVISED
CONSULTANT FUNCTIONAL SUPERVISOR: TIMOTHY J.LEE
STATE OF CALIFORNIA - DEPARTMENT OF TRANSPORTATION
Caltrans

LAST REVISION 00-00-00
DATE PLOTTED => $DATE
TIME PLOTTED => $TIME

BORDER LAST REVISED 7/2/2010
USERNAME => $USER
DGN FILE => $REQUEST
RELATIVE BORDER SCALE IS IN INCHES 0 1 2 3
UNIT 0712
PROJECT NUMBER & PHASE 0413000204

NOTE:

FOR ACCURATE RIGHT OF WAY DATA, CONTACT
RIGHT OF WAY ENGINEERING AT THE DISTRICT OFFICE.

Dist	COUNTY	ROUTE	POST MILES TOTAL PROJECT	SHEET No.	TOTAL SHEETS
04	SCL	101,237	45.2/45.8, 2.7/3.3	437	736

6-13-18
REGISTERED CIVIL ENGINEER — DATE

6-20-18
PLANS APPROVAL DATE

REGISTERED PROFESSIONAL ENGINEER
KIN Y. CHAN
No. 55391
Exp. 12/31/18
CIVIL
STATE OF CALIFORNIA

THE STATE OF CALIFORNIA OR ITS OFFICERS OR AGENTS SHALL NOT BE RESPONSIBLE FOR THE ACCURACY OR COMPLETENESS OF SCANNED COPIES OF THIS PLAN SHEET.

Y&C TRANSPORTATION CONSULTANTS, INC.
3250 Ramos Circle
Sacramento, CA 95827

VTA
3331 N First St
Building B
San Jose, CA 95134

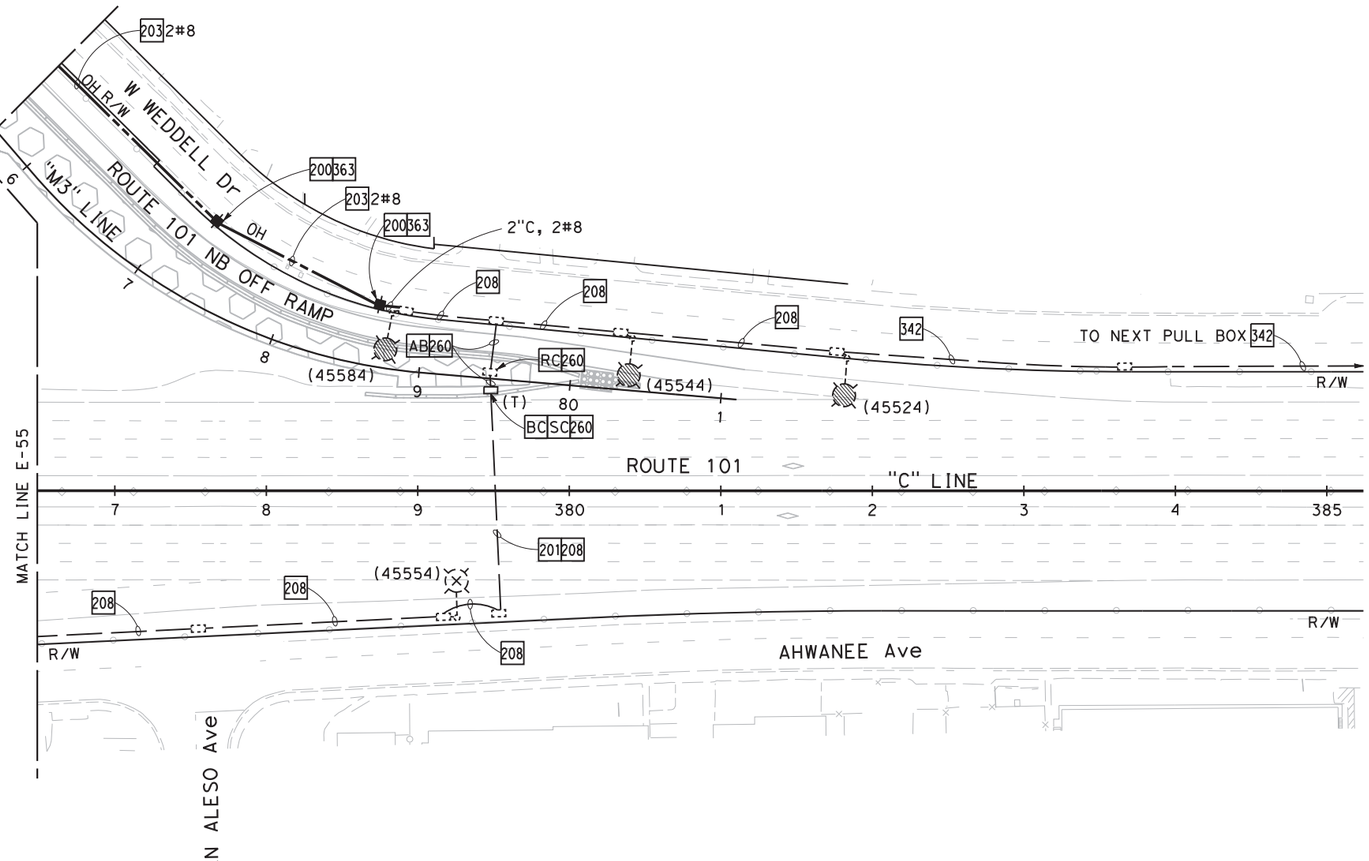

FOR NOTES AND LEGEND, SEE SHEETS E-46 TO E-48

APPROVED FOR ELECTRICAL WORK ONLY

TEMPORARY LIGHTING SYSTEM
(STAGE 2 PHASE 2)

SCALE: 1" = 50'

E-56

STATE OF CALIFORNIA - DEPARTMENT OF TRANSPORTATION
Caltrans

CONSULTANT FUNCTIONAL SUPERVISOR: TIMOTHY J. LEE
CALCULATED-DESIGNED BY: MENG YANG
CHECKED BY: DAN YAU
REVISED BY
DATE REVISED

LAST REVISION 00-00-00
DATE PLOTTED => $DATE
TIME PLOTTED => $TIME

BORDER LAST REVISED 7/2/2010
USERNAME => $USER
DGN FILE => $REQUEST
RELATIVE BORDER SCALE IS IN INCHES 0 1 2 3
UNIT 0712
PROJECT NUMBER & PHASE 0413000204

NOTE:

FOR ACCURATE RIGHT OF WAY DATA, CONTACT
RIGHT OF WAY ENGINEERING AT THE DISTRICT OFFICE.

Dist	COUNTY	ROUTE	POST MILES TOTAL PROJECT	SHEET No.	TOTAL SHEETS
04	SCL	101,237	45.2/45.8, 2.7/3.3	438	736

6-13-18
REGISTERED CIVIL ENGINEER DATE

6-20-18
PLANS APPROVAL DATE

REGISTERED PROFESSIONAL ENGINEER
KIN Y. CHAN
No. 55391
Exp. 12/31/18
CIVIL
STATE OF CALIFORNIA

THE STATE OF CALIFORNIA OR ITS OFFICERS OR AGENTS SHALL NOT BE RESPONSIBLE FOR THE ACCURACY OR COMPLETENESS OF SCANNED COPIES OF THIS PLAN SHEET.

Y&C TRANSPORTATION CONSULTANTS, INC.
3250 Ramos Circle
Sacramento, CA 95827

VTA
3331 N First St
Building B
San Jose, CA 95134

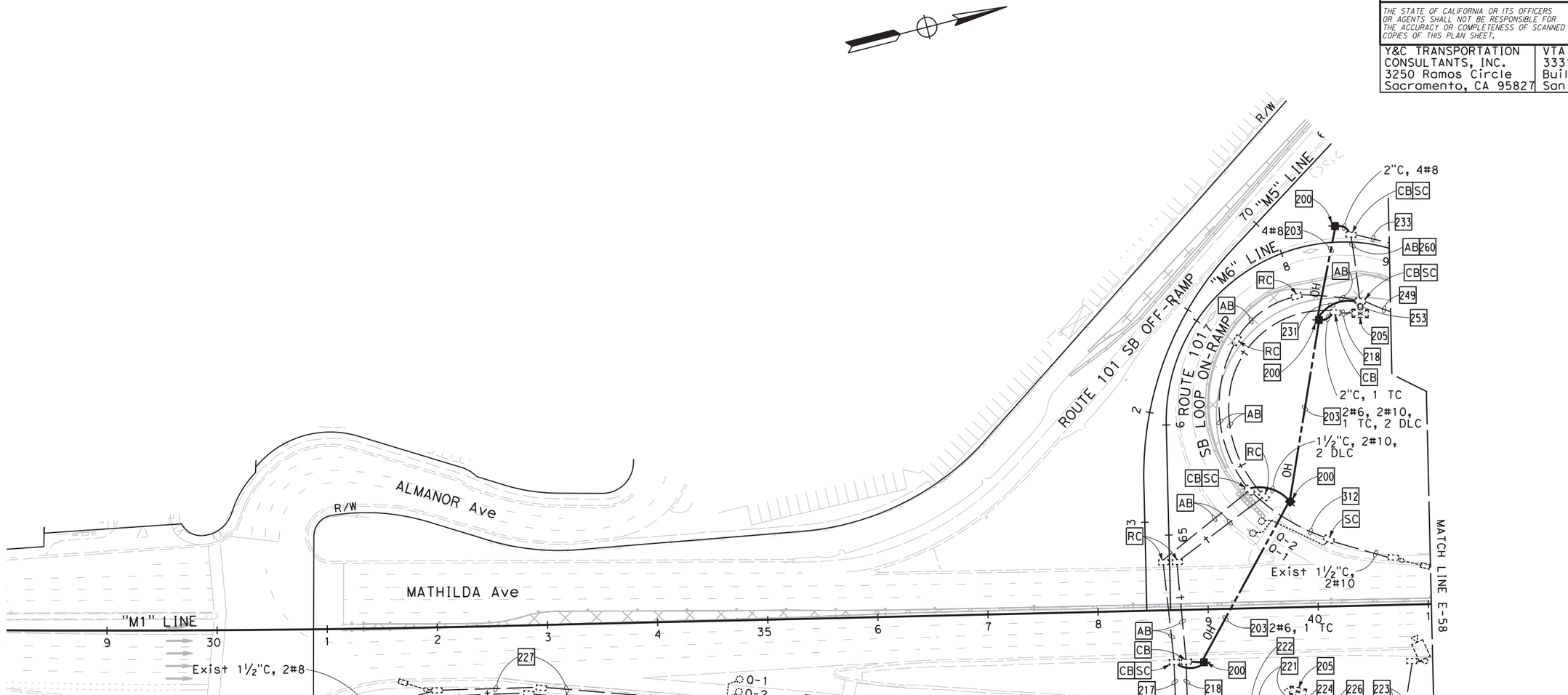

TEMPORARY RAMP METERING SYSTEM
(STAGE 1 PHASE 1 TO STAGE 1 PHASE 2)

SCALE: 1" = 50'

E-57

FOR NOTES AND LEGEND, SEE SHEETS E-46 TO E-48

APPROVED FOR ELECTRICAL WORK ONLY

REVISED BY	MENG YANG
DATE REVISED	
CALCULATED-DESIGNED BY	DAN YAU
CHECKED BY	
CONSULTANT FUNCTIONAL SUPERVISOR	TIMOTHY J. LEE
STATE OF CALIFORNIA - DEPARTMENT OF TRANSPORTATION	Caltrans

LAST REVISION 00-00-00 | DATE PLOTTED => $DATE | TIME PLOTTED => $TIME

BORDER LAST REVISED 7/2/2010 | USERNAME => $USER | DGN FILE => $REQUEST | RELATIVE BORDER SCALE IS IN INCHES 0 1 2 3 | UNIT 0712 | PROJECT NUMBER & PHASE 0413000204

NOTE:

FOR ACCURATE RIGHT OF WAY DATA, CONTACT
RIGHT OF WAY ENGINEERING AT THE DISTRICT OFFICE.

Dist	COUNTY	ROUTE	POST MILES TOTAL PROJECT	SHEET No.	TOTAL SHEETS
04	SCL	101,237	45.2/45.8, 2.7/3.3	439	736

6-13-18
REGISTERED CIVIL ENGINEER — DATE

REGISTERED PROFESSIONAL ENGINEER
KIN Y. CHAN
No. 55391
Exp. 12/31/18
CIVIL
STATE OF CALIFORNIA

6-20-18
PLANS APPROVAL DATE

THE STATE OF CALIFORNIA OR ITS OFFICERS OR AGENTS SHALL NOT BE RESPONSIBLE FOR THE ACCURACY OR COMPLETENESS OF SCANNED COPIES OF THIS PLAN SHEET.

Y&C TRANSPORTATION CONSULTANTS, INC.
3250 Ramos Circle
Sacramento, CA 95827

VTA
3331 N First St
Building B
San Jose, CA 95134

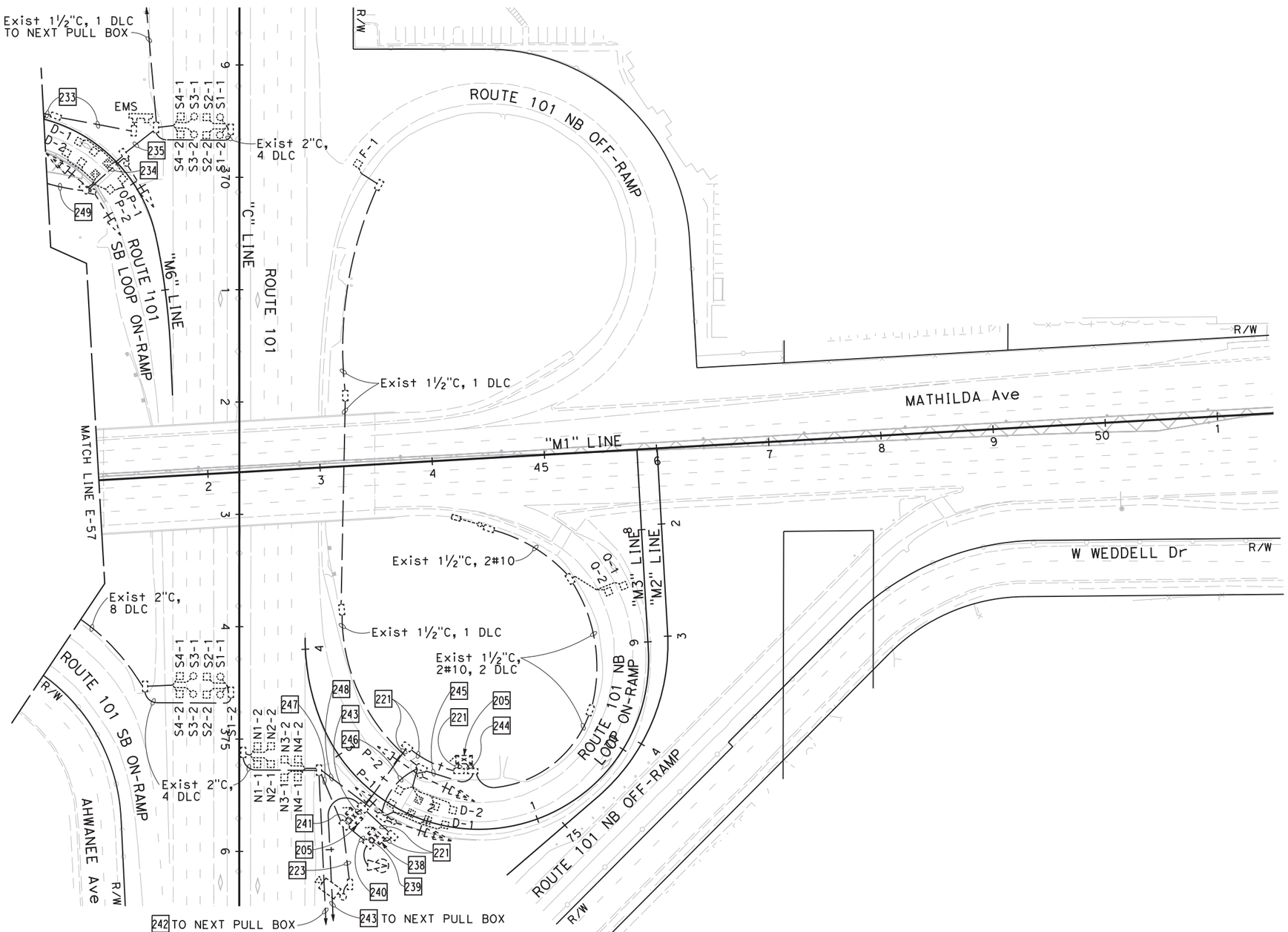

FOR NOTES AND LEGEND, SEE SHEETS E-46 TO E-48

TEMPORARY RAMP METERING SYSTEM
(STAGE 1 PHASE 1 TO STAGE 1 PHASE 4)

SCALE: 1" = 50'

E-58

APPROVED FOR ELECTRICAL WORK ONLY

STATE OF CALIFORNIA - DEPARTMENT OF TRANSPORTATION
Caltrans

CONSULTANT FUNCTIONAL SUPERVISOR: TIMOTHY J. LEE
CALCULATED-DESIGNED BY: MENG YANG
CHECKED BY: DAN YAU
REVISED BY
DATE REVISED

LAST REVISION 00-00-00
DATE PLOTTED => $DATE
TIME PLOTTED => $TIME

BORDER LAST REVISED 7/2/2010
USERNAME => $USER
DGN FILE => $REQUEST
RELATIVE BORDER SCALE IS IN INCHES 0 1 2 3
UNIT 0712
PROJECT NUMBER & PHASE 0413000204

NOTE:

FOR ACCURATE RIGHT OF WAY DATA, CONTACT
RIGHT OF WAY ENGINEERING AT THE DISTRICT OFFICE.

Dist	COUNTY	ROUTE	POST MILES TOTAL PROJECT	SHEET No.	TOTAL SHEETS
04	SCL	101,237	45.2/45.8, 2.7/3.3	440	736

6-13-18
REGISTERED CIVIL ENGINEER DATE

REGISTERED PROFESSIONAL ENGINEER
KIN Y. CHAN
No. 55391
Exp. 12/31/18
CIVIL
STATE OF CALIFORNIA

6-20-18
PLANS APPROVAL DATE

THE STATE OF CALIFORNIA OR ITS OFFICERS OR AGENTS SHALL NOT BE RESPONSIBLE FOR THE ACCURACY OR COMPLETENESS OF SCANNED COPIES OF THIS PLAN SHEET.

Y&C TRANSPORTATION CONSULTANTS, INC.
3250 Ramos Circle
Sacramento, CA 95827

VTA
3331 N First St
Building B
San Jose, CA 95134

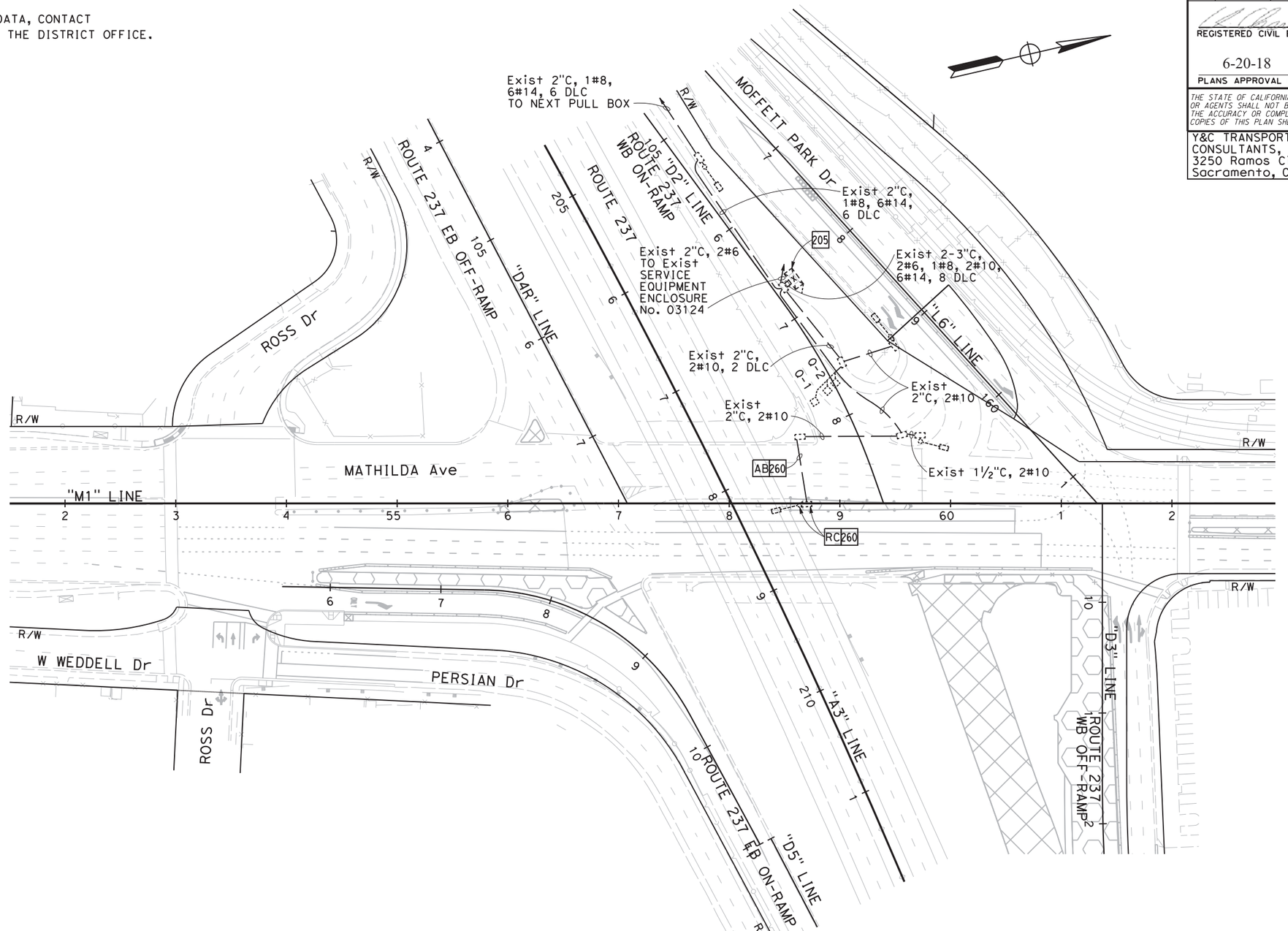

FOR NOTES AND LEGEND, SEE SHEETS E-46 TO E-48

TEMPORARY RAMP METERING SYSTEM
(STAGE 1 PHASE 2 TO STAGE 1 PHASE 4)

SCALE: 1" = 50'

E-59

APPROVED FOR ELECTRICAL WORK ONLY

MENG YANG	DAN YAU	REVISED BY / DATE REVISED
		CALCULATED-DESIGNED BY
		CHECKED BY
TIMOTHY J. LEE		CONSULTANT FUNCTIONAL SUPERVISOR
STATE OF CALIFORNIA - DEPARTMENT OF TRANSPORTATION		Caltrans

LAST REVISION 00-00-00 | DATE PLOTTED => $DATE | TIME PLOTTED => $TIME

BORDER LAST REVISED 7/2/2010 | USERNAME => $USER | DGN FILE => $REQUEST | RELATIVE BORDER SCALE IS IN INCHES 0 1 2 3 | UNIT 0712 | PROJECT NUMBER & PHASE 0413000204

NOTE:

FOR ACCURATE RIGHT OF WAY DATA, CONTACT
RIGHT OF WAY ENGINEERING AT THE DISTRICT OFFICE.

Dist	COUNTY	ROUTE	POST MILES TOTAL PROJECT	SHEET No.	TOTAL SHEETS
04	SCL	101,237	45.2/45.8, 2.7/3.3	441	736

6-13-18
REGISTERED CIVIL ENGINEER — DATE

REGISTERED PROFESSIONAL ENGINEER
KIN Y. CHAN
No. 55391
Exp. 12/31/18
CIVIL
STATE OF CALIFORNIA

6-20-18
PLANS APPROVAL DATE

THE STATE OF CALIFORNIA OR ITS OFFICERS OR AGENTS SHALL NOT BE RESPONSIBLE FOR THE ACCURACY OR COMPLETENESS OF SCANNED COPIES OF THIS PLAN SHEET.

Y&C TRANSPORTATION CONSULTANTS, INC.
3250 Ramos Circle
Sacramento, CA 95827

VTA
3331 N First St
Building B
San Jose, CA 95134

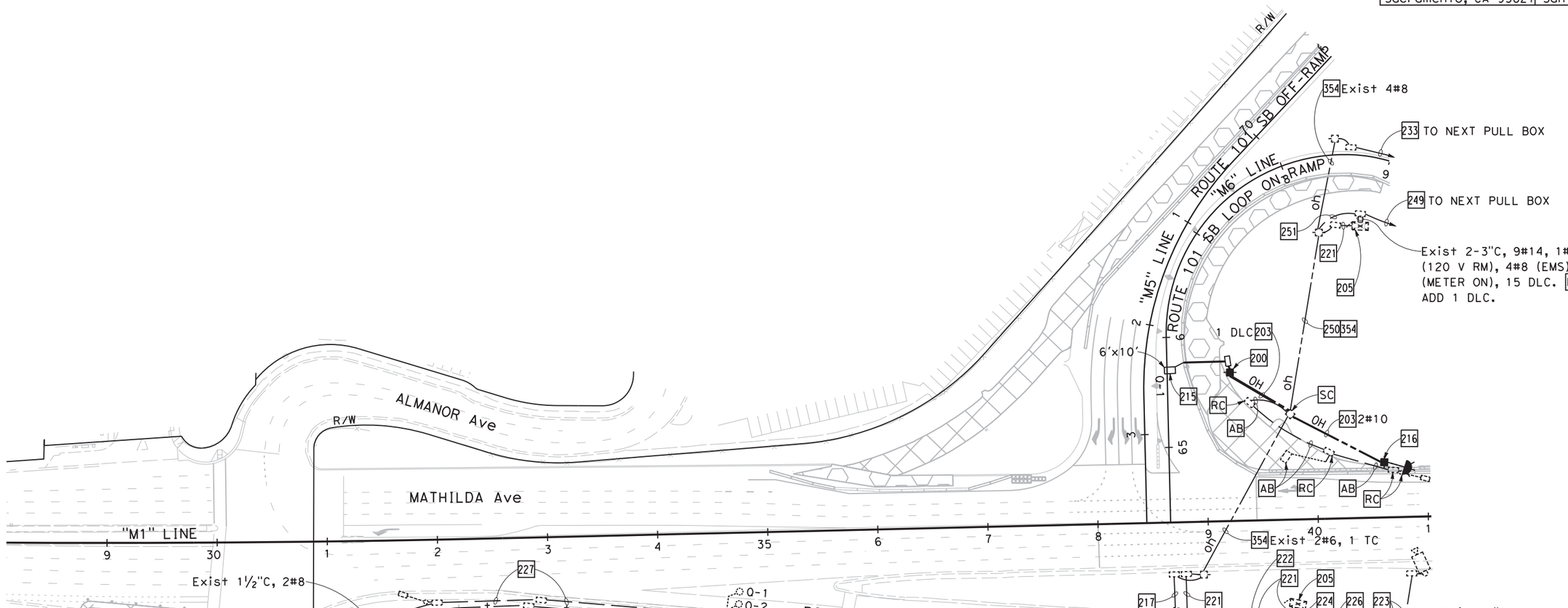

TEMPORARY RAMP METERING SYSTEM
(STAGE 1 PHASE 3)

SCALE: 1" = 50'

E-60

FOR NOTES AND LEGEND, SEE SHEETS E-46 TO E-48

APPROVED FOR ELECTRICAL WORK ONLY

CALCULATED-DESIGNED BY: MENG YANG
CHECKED BY: DAN YAU
REVISED BY / DATE REVISED
CONSULTANT FUNCTIONAL SUPERVISOR: TIMOTHY J. LEE
STATE OF CALIFORNIA - DEPARTMENT OF TRANSPORTATION
Caltrans

LAST REVISION 00-00-00
DATE PLOTTED => $DATE
TIME PLOTTED => $TIME

BORDER LAST REVISED 7/2/2010
USERNAME => $USER
DGN FILE => $REQUEST
RELATIVE BORDER SCALE IS IN INCHES 0 1 2 3
UNIT 0712
PROJECT NUMBER & PHASE 0413000204

NOTE:

FOR ACCURATE RIGHT OF WAY DATA, CONTACT
RIGHT OF WAY ENGINEERING AT THE DISTRICT OFFICE.

Dist	COUNTY	ROUTE	POST MILES TOTAL PROJECT	SHEET No.	TOTAL SHEETS
04	SCL	101,237	45.2/45.8, 2.7/3.3	442	736

6-13-18
REGISTERED CIVIL ENGINEER — DATE

REGISTERED PROFESSIONAL ENGINEER
KIN Y. CHAN
No. 55391
Exp. 12/31/18
CIVIL
STATE OF CALIFORNIA

6-20-18
PLANS APPROVAL DATE

THE STATE OF CALIFORNIA OR ITS OFFICERS OR AGENTS SHALL NOT BE RESPONSIBLE FOR THE ACCURACY OR COMPLETENESS OF SCANNED COPIES OF THIS PLAN SHEET.

Y&C TRANSPORTATION CONSULTANTS, INC.
3250 Ramos Circle
Sacramento, CA 95827

VTA
3331 N First St
Building B
San Jose, CA 95134

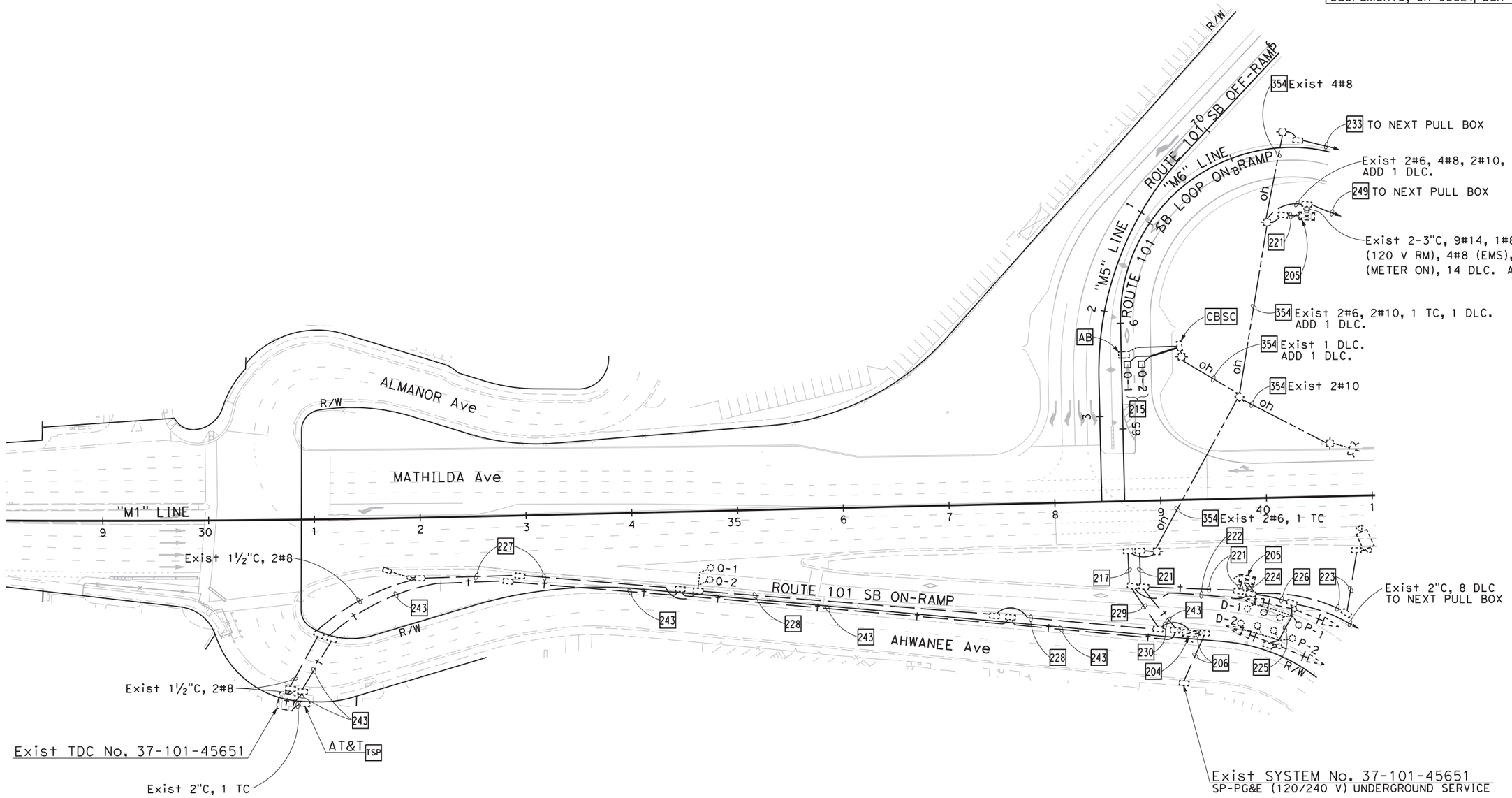

TEMPORARY RAMP METERING SYSTEM
(STAGE 1 PHASE 4)

SCALE: 1" = 50'

E-61

FOR NOTES AND LEGEND, SEE SHEETS E-46 TO E-48

APPROVED FOR ELECTRICAL WORK ONLY

CALCULATED- DESIGNED BY: MENG YANG
CHECKED BY: DAN YAU
REVISED BY / DATE REVISED
CONSULTANT FUNCTIONAL SUPERVISOR: TIMOTHY J. LEE
STATE OF CALIFORNIA - DEPARTMENT OF TRANSPORTATION
Caltrans

LAST REVISION 00-00-00
DATE PLOTTED => $DATE
TIME PLOTTED => $TIME

BORDER LAST REVISED 7/2/2010
USERNAME => $USER
DGN FILE => $REQUEST
RELATIVE BORDER SCALE IS IN INCHES 0 1 2 3
UNIT 0712
PROJECT NUMBER & PHASE 0413000204

NOTE:

FOR ACCURATE RIGHT OF WAY DATA, CONTACT
RIGHT OF WAY ENGINEERING AT THE DISTRICT OFFICE.

Dist	COUNTY	ROUTE	POST MILES TOTAL PROJECT	SHEET No.	TOTAL SHEETS
04	SCL	101,237	45.2/45.8, 2.7/3.3	443	736

6-13-18
REGISTERED CIVIL ENGINEER — DATE

REGISTERED PROFESSIONAL ENGINEER
KIN Y. CHAN
No. 55391
Exp. 12/31/18
CIVIL
STATE OF CALIFORNIA

6-20-18
PLANS APPROVAL DATE

THE STATE OF CALIFORNIA OR ITS OFFICERS OR AGENTS SHALL NOT BE RESPONSIBLE FOR THE ACCURACY OR COMPLETENESS OF SCANNED COPIES OF THIS PLAN SHEET.

Y&C TRANSPORTATION CONSULTANTS, INC.
3250 Ramos Circle
Sacramento, CA 95827

VTA
3331 N First St
Building B
San Jose, CA 95134

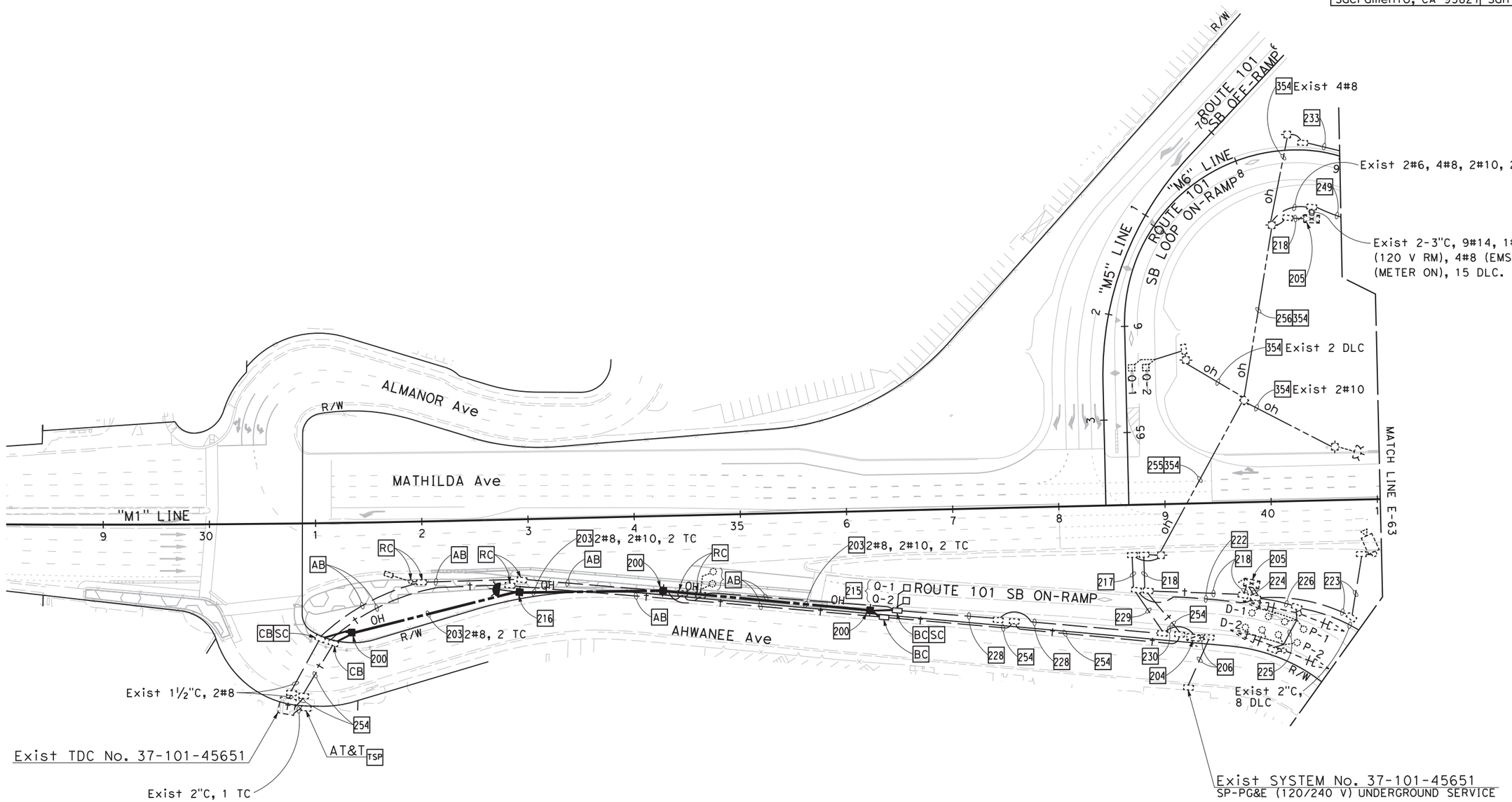

TEMPORARY RAMP METERING SYSTEM
(STAGE 2 PHASE 1 TO STAGE 2 PHASE 3)

SCALE: 1" = 50'

E-62

FOR NOTES AND LEGEND, SEE SHEETS E-46 TO E-48

APPROVED FOR ELECTRICAL WORK ONLY

CALCULATED-DESIGNED BY	MENG YANG
CHECKED BY	DAN YAU
CONSULTANT FUNCTIONAL SUPERVISOR	TIMOTHY J. LEE
STATE OF CALIFORNIA - DEPARTMENT OF TRANSPORTATION	Caltrans

REVISED BY	DATE REVISED

LAST REVISION 00-00-00 — DATE PLOTTED => $DATE — TIME PLOTTED => $TIME

BORDER LAST REVISED 7/2/2010 | USERNAME => $USER | DGN FILE => $REQUEST | RELATIVE BORDER SCALE IS IN INCHES 0 1 2 3 | UNIT 0712 | PROJECT NUMBER & PHASE 0413000204

Dist	COUNTY	ROUTE	POST MILES TOTAL PROJECT	SHEET No.	TOTAL SHEETS
04	SCL	101,237	45.2/45.8, 2.7/3.3	444	736

REGISTERED CIVIL ENGINEER 6-13-18 DATE

6-20-18
PLANS APPROVAL DATE

REGISTERED PROFESSIONAL ENGINEER KIN Y. CHAN No. 55391 Exp. 12/31/18 CIVIL STATE OF CALIFORNIA

THE STATE OF CALIFORNIA OR ITS OFFICERS OR AGENTS SHALL NOT BE RESPONSIBLE FOR THE ACCURACY OR COMPLETENESS OF SCANNED COPIES OF THIS PLAN SHEET.

Y&C TRANSPORTATION CONSULTANTS, INC.
3250 Ramos Circle
Sacramento, CA 95827

VTA
3331 N First St
Building B
San Jose, CA 95134

NOTE:
FOR ACCURATE RIGHT OF WAY DATA, CONTACT RIGHT OF WAY ENGINEERING AT THE DISTRICT OFFICE.

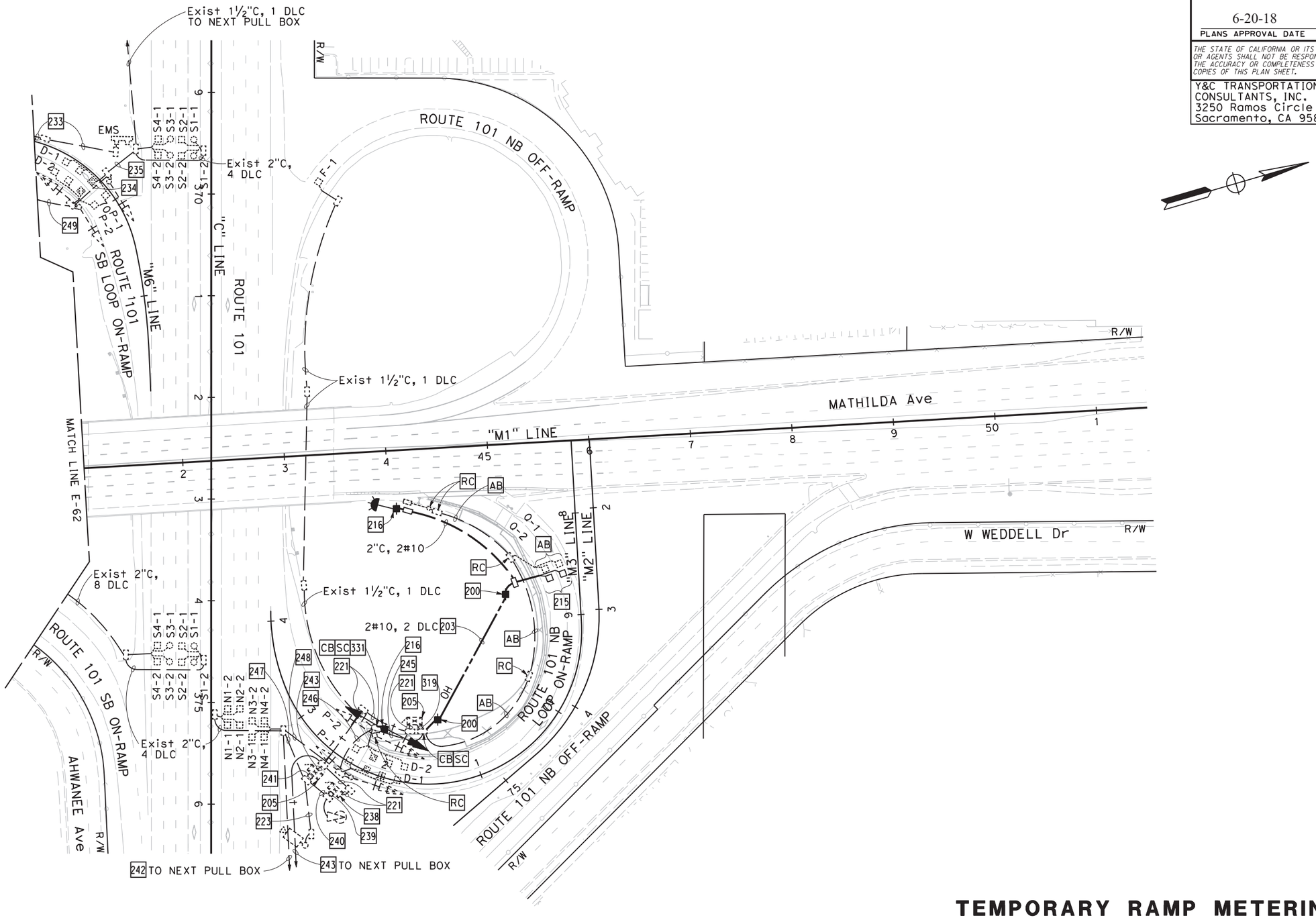

TEMPORARY RAMP METERING SYSTEM
(STAGE 2 PHASE 1)
SCALE: 1" = 50'

E-63

FOR NOTES AND LEGEND, SEE SHEETS E-46 TO E-48

APPROVED FOR ELECTRICAL WORK ONLY

STATE OF CALIFORNIA - DEPARTMENT OF TRANSPORTATION
Caltrans

CONSULTANT FUNCTIONAL SUPERVISOR: TIMOTHY J. LEE
CALCULATED-DESIGNED BY: MENG YANG
CHECKED BY: DAN YAU
REVISED BY
DATE REVISED

LAST REVISION 00-00-00
DATE PLOTTED => $DATE
TIME PLOTTED => $TIME

NOTE:

FOR ACCURATE RIGHT OF WAY DATA, CONTACT
RIGHT OF WAY ENGINEERING AT THE DISTRICT OFFICE.

Dist	COUNTY	ROUTE	POST MILES TOTAL PROJECT	SHEET No.	TOTAL SHEETS
04	SCL	101,237	45.2/45.8, 2.7/3.3	445	736

REGISTERED CIVIL ENGINEER — DATE: 6-13-18

PLANS APPROVAL DATE: 6-20-18

REGISTERED PROFESSIONAL ENGINEER — KIN Y. CHAN, No. 55391, Exp. 12/31/18, CIVIL, STATE OF CALIFORNIA

THE STATE OF CALIFORNIA OR ITS OFFICERS OR AGENTS SHALL NOT BE RESPONSIBLE FOR THE ACCURACY OR COMPLETENESS OF SCANNED COPIES OF THIS PLAN SHEET.

Y&C TRANSPORTATION CONSULTANTS, INC. 3250 Ramos Circle Sacramento, CA 95827	VTA 3331 N First St Building B San Jose, CA 95134

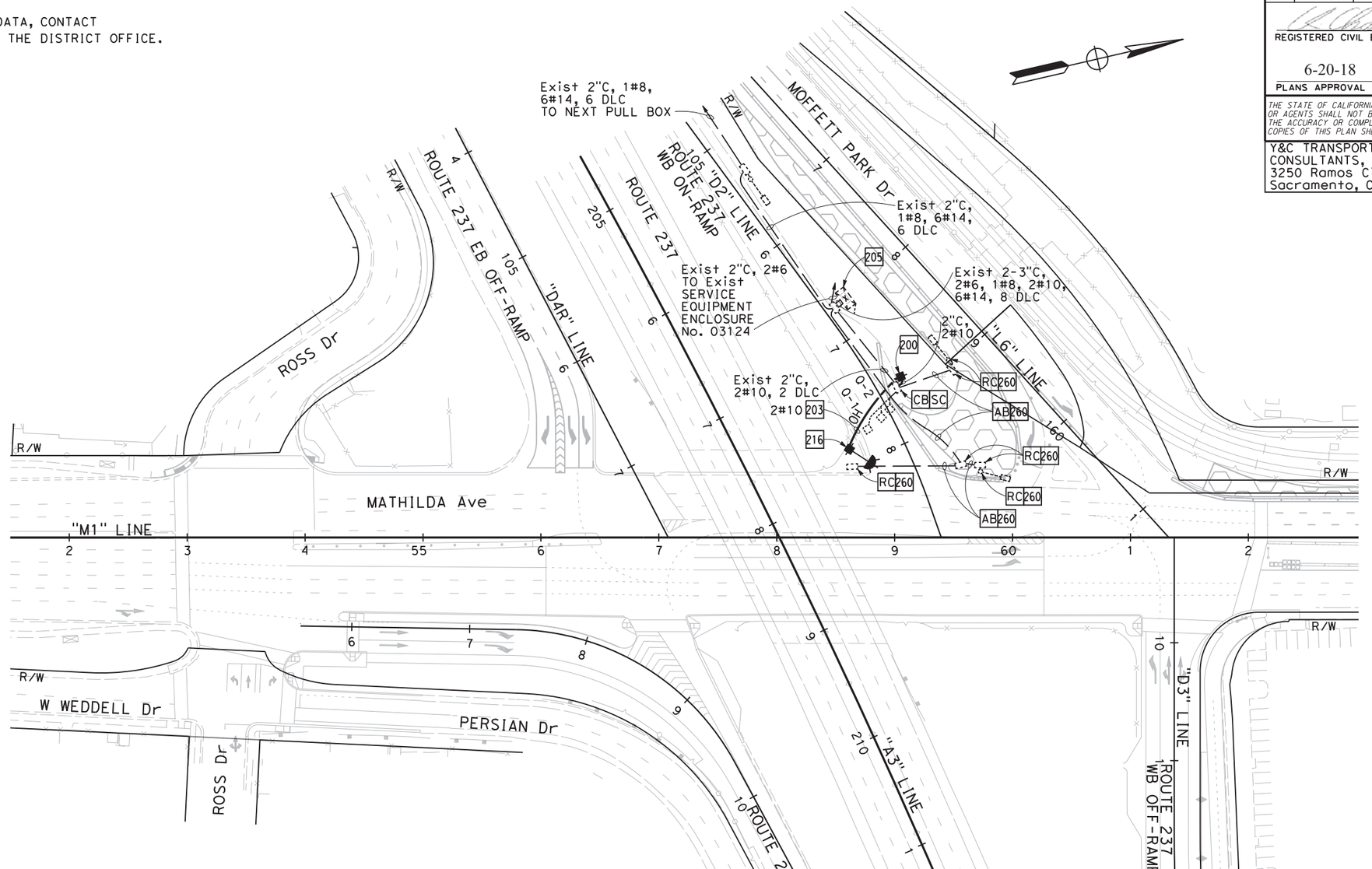

FOR NOTES AND LEGEND, SEE SHEETS E-46 TO E-48

TEMPORARY RAMP METERING SYSTEM
(STAGE 2 PHASE 1 TO STAGE 2 PHASE 2)

SCALE: 1" = 50'

E-64

APPROVED FOR ELECTRICAL WORK ONLY

STATE OF CALIFORNIA - DEPARTMENT OF TRANSPORTATION — Caltrans

CONSULTANT FUNCTIONAL SUPERVISOR: TIMOTHY J. LEE

CALCULATED-DESIGNED BY: MENG YANG

CHECKED BY: DAN YAU

REVISED BY / DATE REVISED

LAST REVISION: 00-00-00 | DATE PLOTTED => $DATE | TIME PLOTTED => $TIME

BORDER LAST REVISED 7/2/2010

USERNAME => $USER
DGN FILE => $REQUEST

RELATIVE BORDER SCALE IS IN INCHES 0 1 2 3

UNIT 0712

PROJECT NUMBER & PHASE 0413000204

Dist	COUNTY	ROUTE	POST MILES TOTAL PROJECT	SHEET No.	TOTAL SHEETS
04	SCL	101,237	45.2/45.8, 2.7/3.3	446	736

REGISTERED CIVIL ENGINEER — DATE 6-13-18

PLANS APPROVAL DATE 6-20-18

REGISTERED PROFESSIONAL ENGINEER — KIN Y. CHAN — No. 55391 — Exp. 12/31/18 — CIVIL — STATE OF CALIFORNIA

THE STATE OF CALIFORNIA OR ITS OFFICERS OR AGENTS SHALL NOT BE RESPONSIBLE FOR THE ACCURACY OR COMPLETENESS OF SCANNED COPIES OF THIS PLAN SHEET.

Y&C TRANSPORTATION CONSULTANTS, INC.
3250 Ramos Circle
Sacramento, CA 95827

VTA
3331 N First St
Building B
San Jose, CA 95134

NOTE:

FOR ACCURATE RIGHT OF WAY DATA, CONTACT RIGHT OF WAY ENGINEERING AT THE DISTRICT OFFICE.

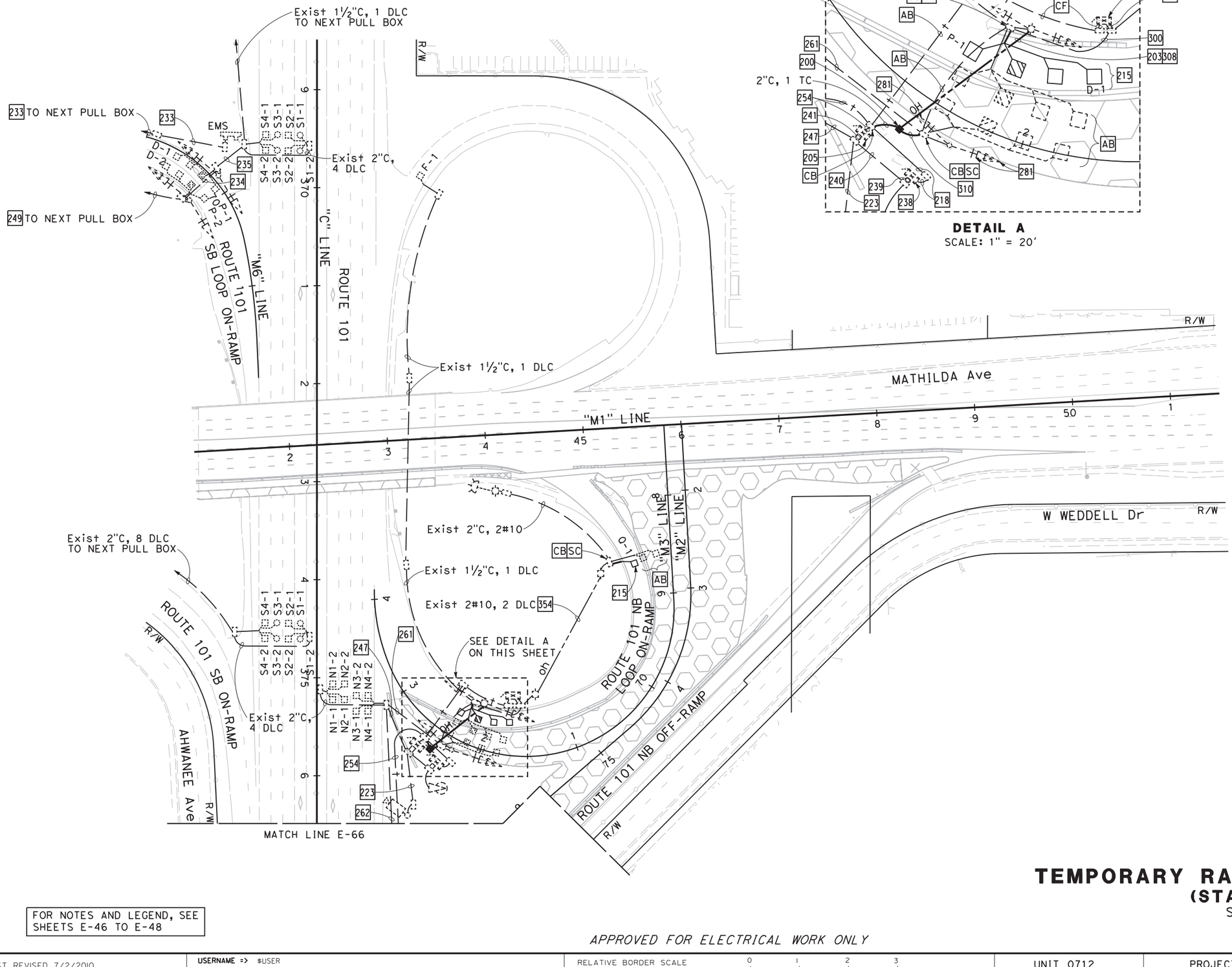

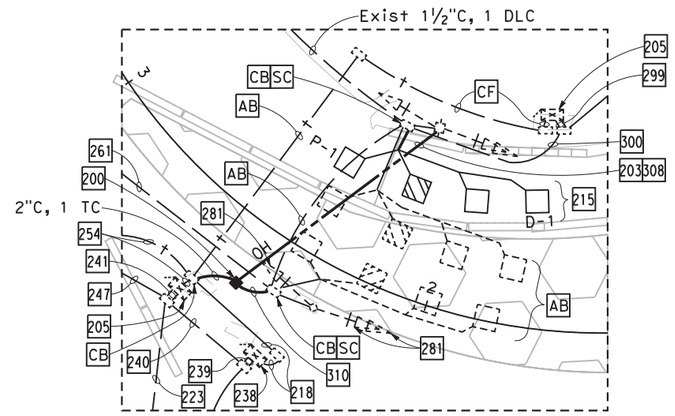

DETAIL A
SCALE: 1" = 20'

TEMPORARY RAMP METERING SYSTEM
(STAGE 2 PHASE 2)
SCALE: 1" = 50'

E-65

FOR NOTES AND LEGEND, SEE SHEETS E-46 TO E-48

APPROVED FOR ELECTRICAL WORK ONLY

STATE OF CALIFORNIA - DEPARTMENT OF TRANSPORTATION — Caltrans

CONSULTANT FUNCTIONAL SUPERVISOR: TIMOTHY J. LEE

CALCULATED-DESIGNED BY: MENG YANG
CHECKED BY: DAN YAU
REVISED BY / DATE REVISED:

LAST REVISION 00-00-00 — DATE PLOTTED => $DATE — TIME PLOTTED => $TIME

BORDER LAST REVISED 7/2/2010 | USERNAME => $USER | DGN FILE => $REQUEST | RELATIVE BORDER SCALE IS IN INCHES 0 1 2 3 | UNIT 0712 | PROJECT NUMBER & PHASE 0413000204

NOTE:

FOR ACCURATE RIGHT OF WAY DATA, CONTACT
RIGHT OF WAY ENGINEERING AT THE DISTRICT OFFICE.

Dist	COUNTY	ROUTE	POST MILES TOTAL PROJECT	SHEET No.	TOTAL SHEETS
04	SCL	101,237	45.2/45.8, 2.7/3.3	447	736

6-13-18
REGISTERED CIVIL ENGINEER DATE

KIN Y. CHAN
No. 55391
Exp. 12/31/18
CIVIL
REGISTERED PROFESSIONAL ENGINEER
STATE OF CALIFORNIA

6-20-18
PLANS APPROVAL DATE

THE STATE OF CALIFORNIA OR ITS OFFICERS OR AGENTS SHALL NOT BE RESPONSIBLE FOR THE ACCURACY OR COMPLETENESS OF SCANNED COPIES OF THIS PLAN SHEET.

Y&C TRANSPORTATION CONSULTANTS, INC.
3250 Ramos Circle
Sacramento, CA 95827

VTA
3331 N First St
Building B
San Jose, CA 95134

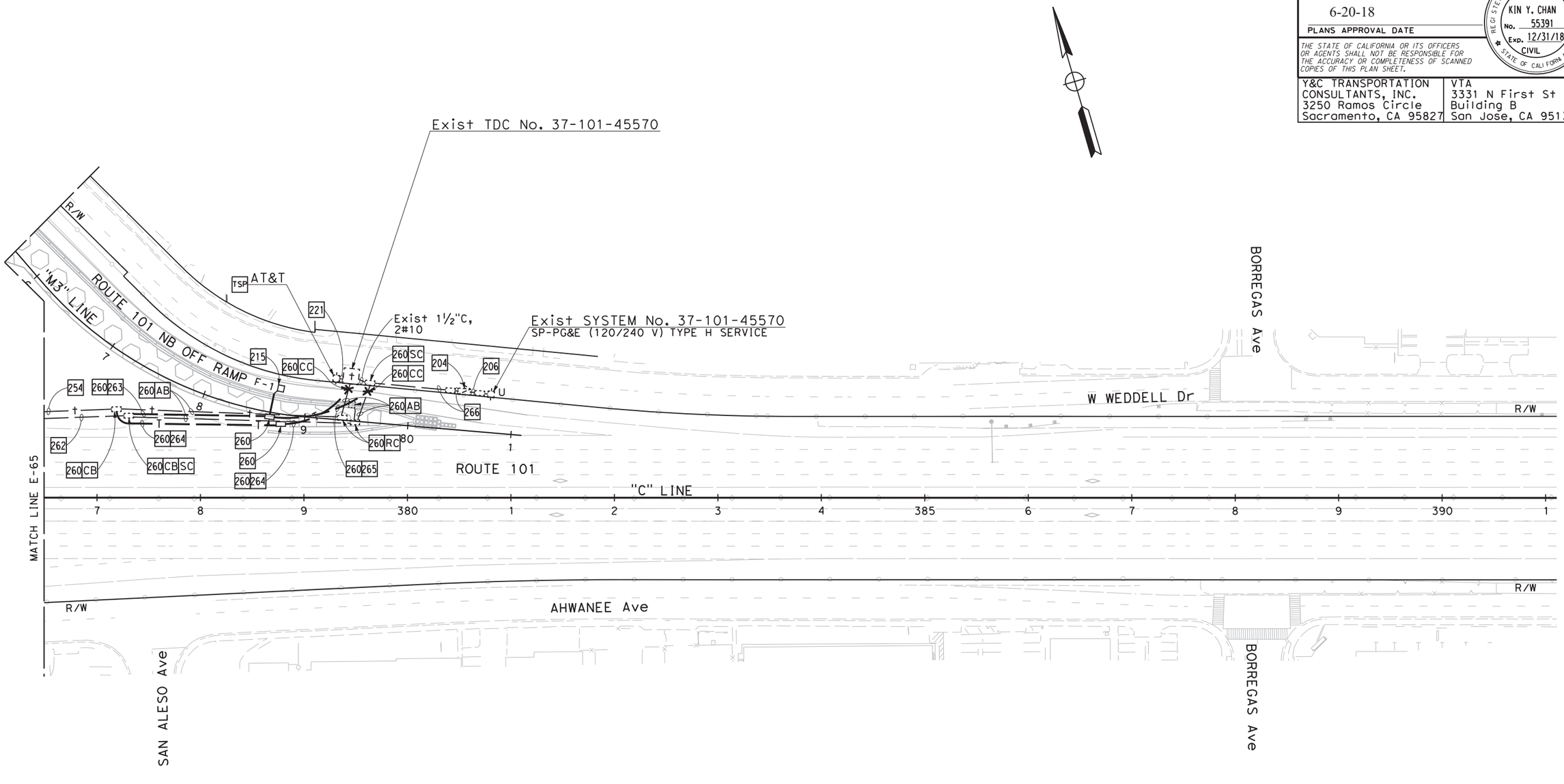

FOR NOTES AND LEGEND, SEE SHEETS E-46 TO E-48

APPROVED FOR ELECTRICAL WORK ONLY

TEMPORARY RAMP METERING SYSTEM
(STAGE 2 PHASE 2)

SCALE: 1" = 50'

E-66

REVISED BY: MENG YANG
DATE REVISED: DAN YAU
CALCULATED-DESIGNED BY:
CHECKED BY:
CONSULTANT FUNCTIONAL SUPERVISOR: TIMOTHY J.LEE
STATE OF CALIFORNIA - DEPARTMENT OF TRANSPORTATION
Caltrans

LAST REVISION 00-00-00
DATE PLOTTED => $DATE
TIME PLOTTED => $TIME

BORDER LAST REVISED 7/2/2010
USERNAME => $USER
DGN FILE => $REQUEST
RELATIVE BORDER SCALE IS IN INCHES 0 1 2 3
UNIT 0712
PROJECT NUMBER & PHASE 0413000204

Dist	COUNTY	ROUTE	POST MILES TOTAL PROJECT	SHEET No.	TOTAL SHEETS
04	SCL	101,237	45.2/45.8, 2.7/3.3	448	736

REGISTERED CIVIL ENGINEER 6-13-18 DATE

6-20-18
PLANS APPROVAL DATE

REGISTERED PROFESSIONAL ENGINEER KIN Y. CHAN No. 55391 Exp. 12/31/18 CIVIL STATE OF CALIFORNIA

THE STATE OF CALIFORNIA OR ITS OFFICERS OR AGENTS SHALL NOT BE RESPONSIBLE FOR THE ACCURACY OR COMPLETENESS OF SCANNED COPIES OF THIS PLAN SHEET.

Y&C TRANSPORTATION CONSULTANTS, INC.
3250 Ramos Circle
Sacramento, CA 95827

VTA
3331 N First St
Building B
San Jose, CA 95134

NOTE:
FOR ACCURATE RIGHT OF WAY DATA, CONTACT RIGHT OF WAY ENGINEERING AT THE DISTRICT OFFICE.

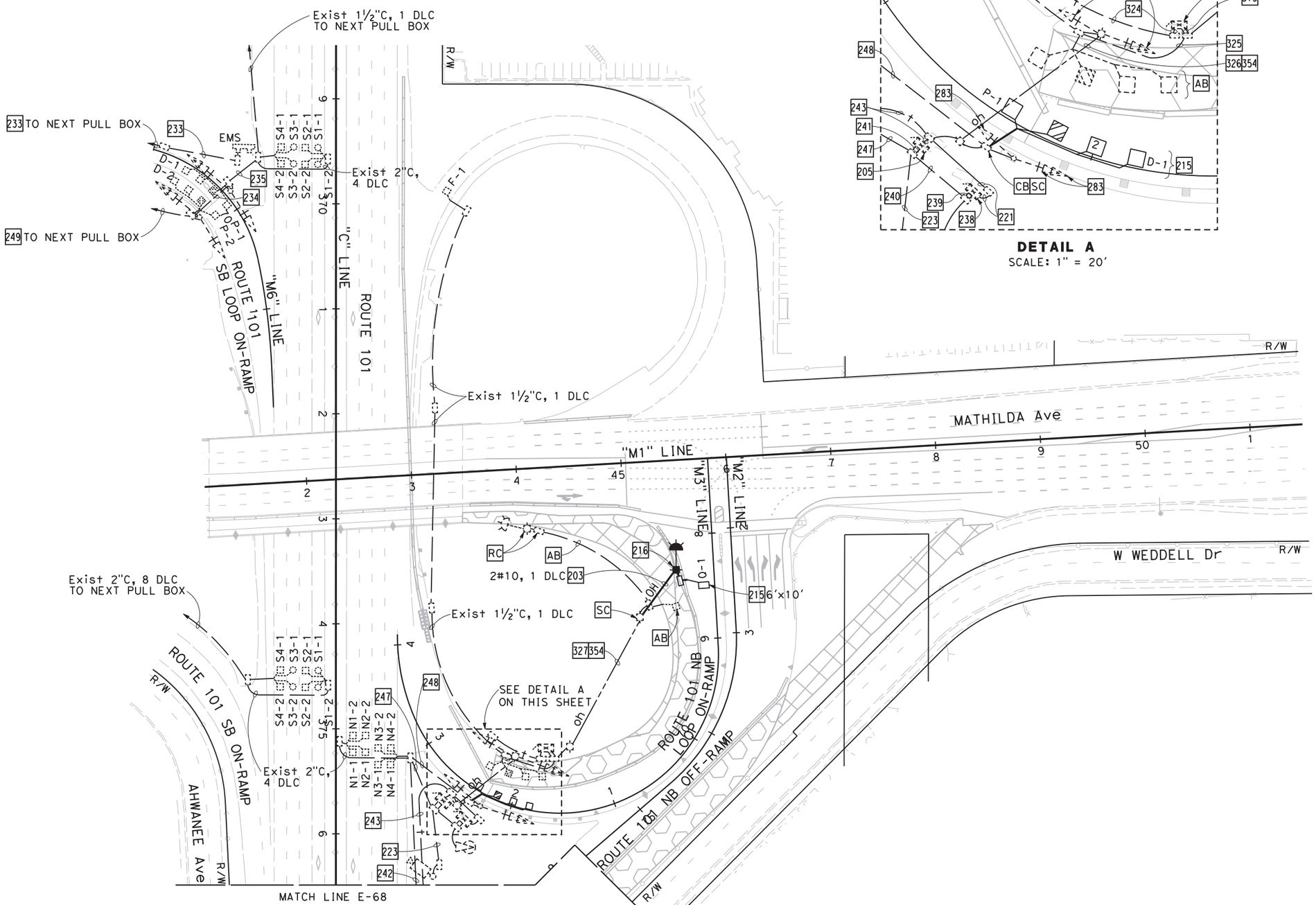

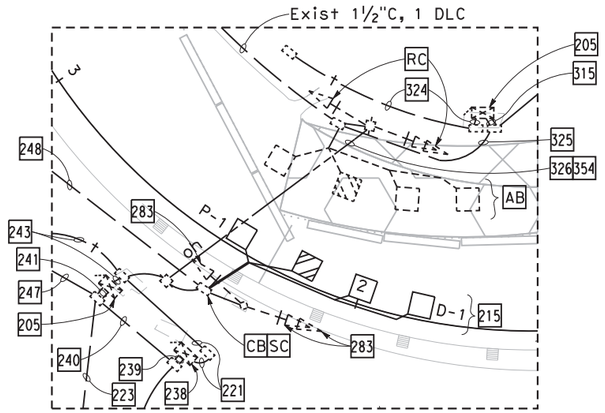

DETAIL A
SCALE: 1" = 20'

TEMPORARY RAMP METERING SYSTEM
(STAGE 2 PHASE 3)
SCALE: 1" = 50'

E-67

FOR NOTES AND LEGEND, SEE SHEETS E-46 TO E-48

APPROVED FOR ELECTRICAL WORK ONLY

STATE OF CALIFORNIA - DEPARTMENT OF TRANSPORTATION
Caltrans

CONSULTANT FUNCTIONAL SUPERVISOR: TIMOTHY J. LEE
CALCULATED-DESIGNED BY: MENG YANG
CHECKED BY: DAN YAU
REVISED BY
DATE REVISED

LAST REVISION 00-00-00
DATE PLOTTED => $DATE
TIME PLOTTED => $TIME

BORDER LAST REVISED 7/2/2010
USERNAME => $USER
DGN FILE => $REQUEST
RELATIVE BORDER SCALE IS IN INCHES 0 1 2 3
UNIT 0712
PROJECT NUMBER & PHASE 0413000204

NOTE:

FOR ACCURATE RIGHT OF WAY DATA, CONTACT
RIGHT OF WAY ENGINEERING AT THE DISTRICT OFFICE.

Dist	COUNTY	ROUTE	POST MILES TOTAL PROJECT	SHEET No.	TOTAL SHEETS
04	SCL	101,237	45.2/45.8, 2.7/3.3	449	736

REGISTERED CIVIL ENGINEER — DATE: 6-13-18

KIN Y. CHAN
No. 55391
Exp. 12/31/18
CIVIL
REGISTERED PROFESSIONAL ENGINEER
STATE OF CALIFORNIA

PLANS APPROVAL DATE: 6-20-18

THE STATE OF CALIFORNIA OR ITS OFFICERS OR AGENTS SHALL NOT BE RESPONSIBLE FOR THE ACCURACY OR COMPLETENESS OF SCANNED COPIES OF THIS PLAN SHEET.

Y&C TRANSPORTATION CONSULTANTS, INC.
3250 Ramos Circle
Sacramento, CA 95827

VTA
3331 N First St
Building B
San Jose, CA 95134

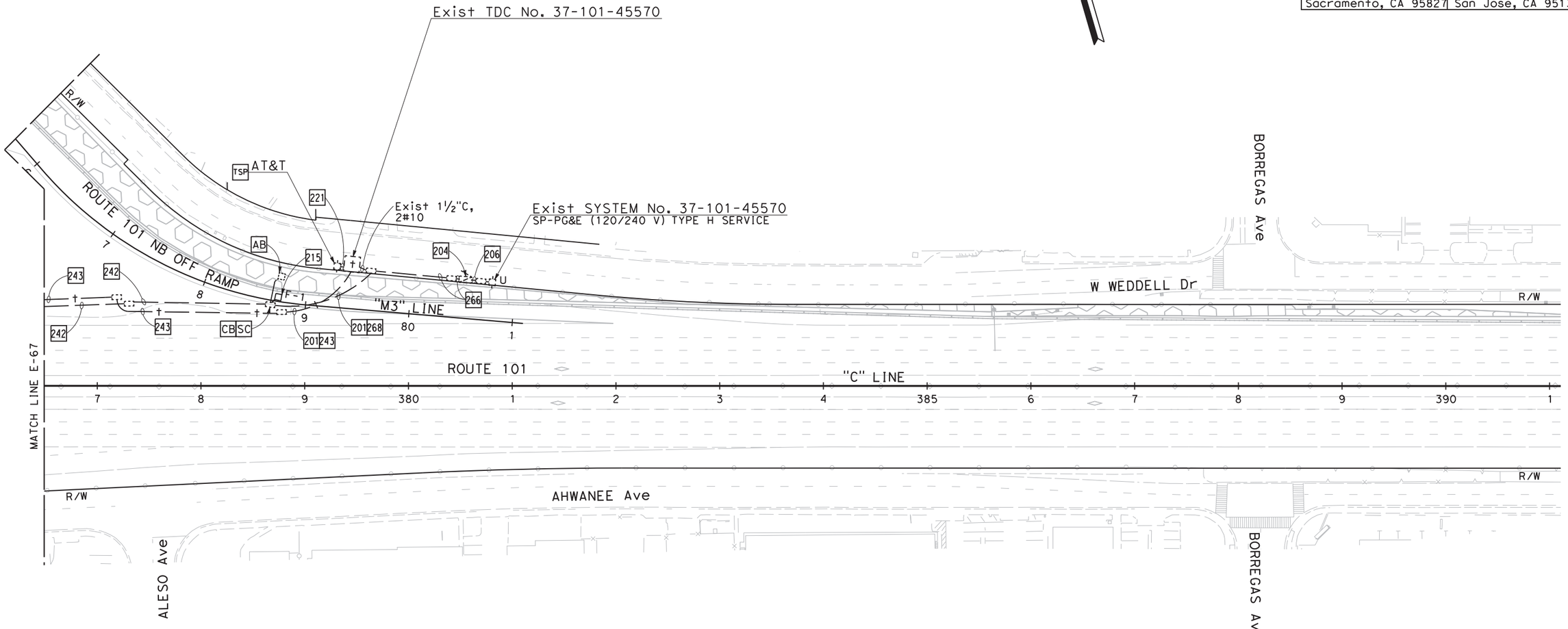

FOR NOTES AND LEGEND, SEE SHEETS E-46 TO E-48

APPROVED FOR ELECTRICAL WORK ONLY

TEMPORARY RAMP METERING SYSTEM
(STAGE 2 PHASE 3)

SCALE: 1" = 50'

E-68

REVISED BY	MENG YANG
DATE REVISED	DAN YAU
CALCULATED-DESIGNED BY	
CHECKED BY	
CONSULTANT FUNCTIONAL SUPERVISOR	TIMOTHY J. LEE

STATE OF CALIFORNIA - DEPARTMENT OF TRANSPORTATION
Caltrans

LAST REVISION 00-00-00
DATE PLOTTED => $DATE
TIME PLOTTED => $TIME

BORDER LAST REVISED 7/2/2010

USERNAME => $USER
DGN FILE => $REQUEST

RELATIVE BORDER SCALE IS IN INCHES 0 1 2 3

UNIT 0712

PROJECT NUMBER & PHASE 0413000204

Dist	COUNTY	ROUTE	POST MILES TOTAL PROJECT	SHEET No.	TOTAL SHEETS
04	SCL	101,237	45.2/45.8, 2.7/3.3	450	736

6-13-18
REGISTERED CIVIL ENGINEER DATE

6-20-18
PLANS APPROVAL DATE

REGISTERED PROFESSIONAL ENGINEER
KIN Y. CHAN
No. 55391
Exp. 12/31/18
CIVIL
STATE OF CALIFORNIA

THE STATE OF CALIFORNIA OR ITS OFFICERS OR AGENTS SHALL NOT BE RESPONSIBLE FOR THE ACCURACY OR COMPLETENESS OF SCANNED COPIES OF THIS PLAN SHEET.

Y&C TRANSPORTATION CONSULTANTS, INC.
3250 Ramos Circle
Sacramento, CA 95827

VTA
3331 N First St
Building B
San Jose, CA 95134

NOTE:
FOR ACCURATE RIGHT OF WAY DATA, CONTACT RIGHT OF WAY ENGINEERING AT THE DISTRICT OFFICE.

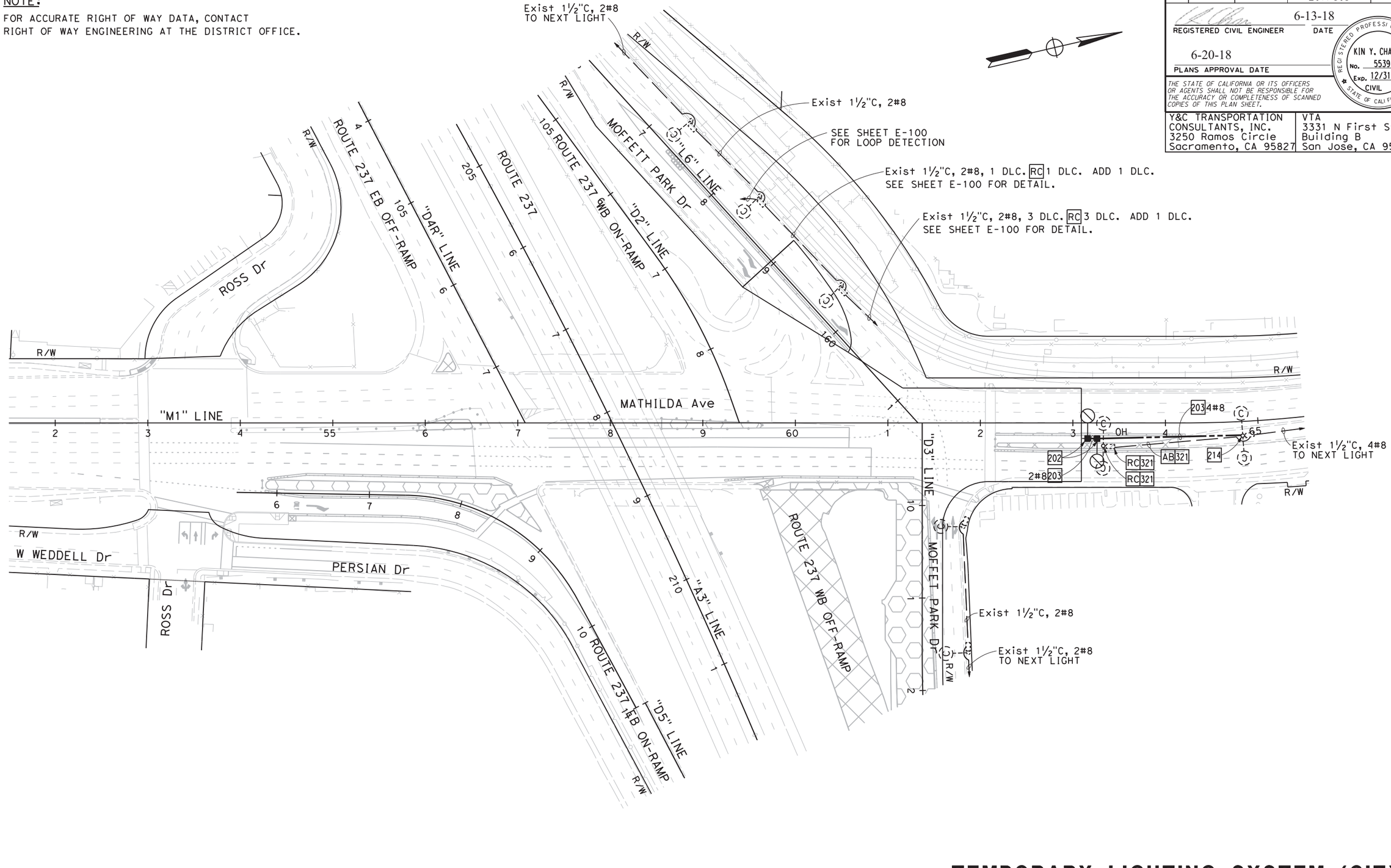

FOR NOTES AND LEGEND, SEE SHEETS E-46 TO E-48

APPROVED FOR ELECTRICAL WORK ONLY

TEMPORARY LIGHTING SYSTEM (CITY)
(STAGE 1 PHASE 2 TO STAGE 2 PHASE 1)

SCALE: 1" = 50'

E-69

MENG YANG — CALCULATED-DESIGNED BY
DAN YAU — CHECKED BY
TIMOTHY J. LEE — CONSULTANT FUNCTIONAL SUPERVISOR
REVISED BY — DATE REVISED

STATE OF CALIFORNIA - DEPARTMENT OF TRANSPORTATION
Caltrans

LAST REVISION 00-00-00
DATE PLOTTED => $DATE
TIME PLOTTED => $TIME

BORDER LAST REVISED 7/2/2010
USERNAME => $USER
DGN FILE => $REQUEST
RELATIVE BORDER SCALE IS IN INCHES 0 1 2 3
UNIT 0712
PROJECT NUMBER & PHASE 0413000204

NOTE:

FOR ACCURATE RIGHT OF WAY DATA, CONTACT
RIGHT OF WAY ENGINEERING AT THE DISTRICT OFFICE.

Dist	COUNTY	ROUTE	POST MILES TOTAL PROJECT	SHEET No.	TOTAL SHEETS
04	SCL	101,237	45.2/45.8, 2.7/3.3	451	736

6-13-18
REGISTERED CIVIL ENGINEER DATE

6-20-18
PLANS APPROVAL DATE

REGISTERED PROFESSIONAL ENGINEER
KIN Y. CHAN
No. 55391
Exp. 12/31/18
CIVIL
STATE OF CALIFORNIA

THE STATE OF CALIFORNIA OR ITS OFFICERS OR AGENTS SHALL NOT BE RESPONSIBLE FOR THE ACCURACY OR COMPLETENESS OF SCANNED COPIES OF THIS PLAN SHEET.

Y&C TRANSPORTATION CONSULTANTS, INC.
3250 Ramos Circle
Sacramento, CA 95827

VTA
3331 N First St
Building B
San Jose, CA 95134

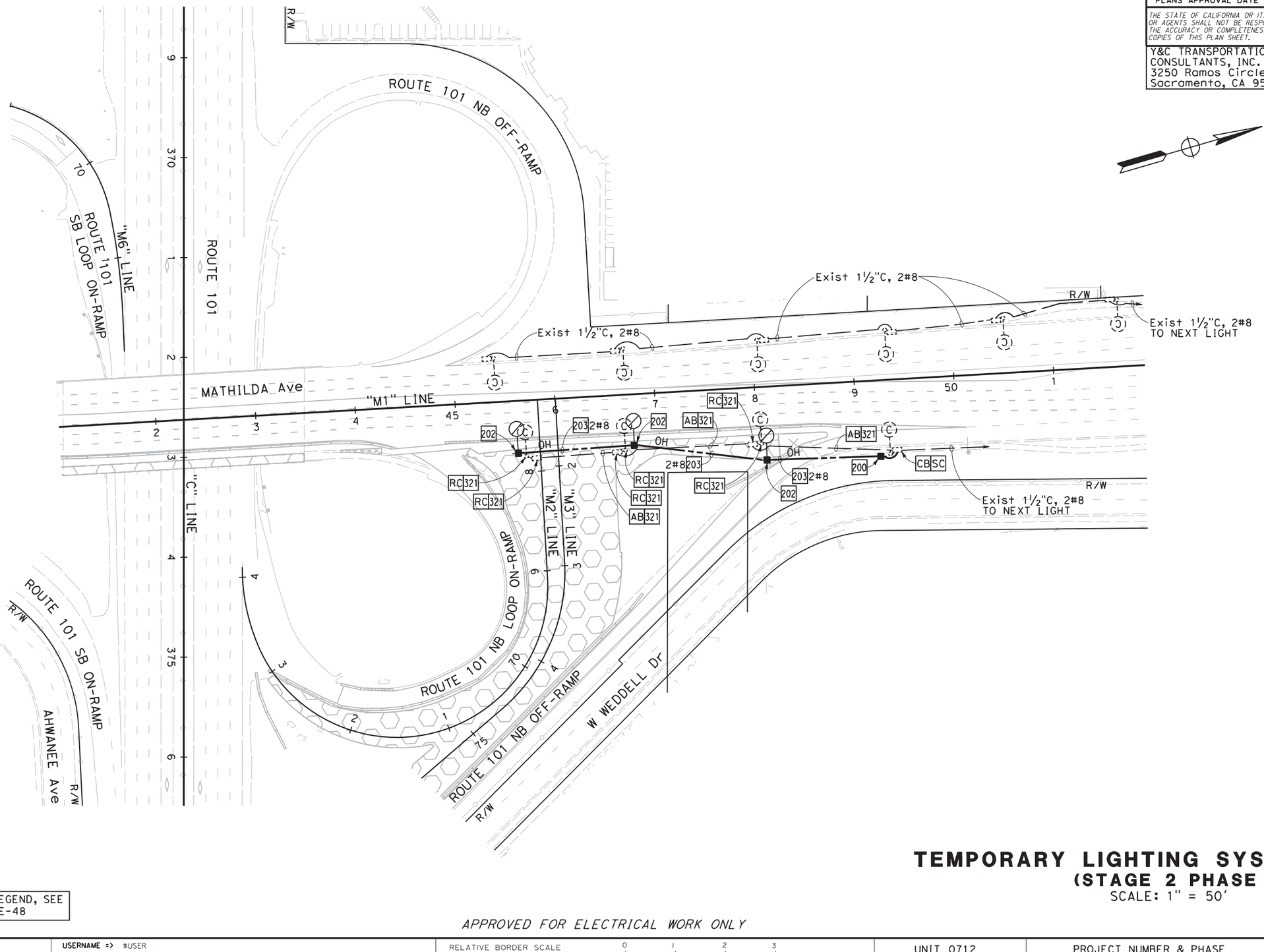

FOR NOTES AND LEGEND, SEE SHEETS E-46 TO E-48

TEMPORARY LIGHTING SYSTEM (CITY)
(STAGE 2 PHASE 2)

SCALE: 1" = 50'

E-70

APPROVED FOR ELECTRICAL WORK ONLY

MENG YANG	REVISED BY
DAN YAU	DATE REVISED
CALCULATED-DESIGNED BY	
CHECKED BY	
CONSULTANT FUNCTIONAL SUPERVISOR	
TIMOTHY J. LEE	
STATE OF CALIFORNIA - DEPARTMENT OF TRANSPORTATION	
Caltrans	

LAST REVISION 00-00-00 | DATE PLOTTED => $DATE | TIME PLOTTED => $TIME

BORDER LAST REVISED 7/2/2010 | USERNAME => $USER | DGN FILE => $REQUEST | RELATIVE BORDER SCALE IS IN INCHES 0 1 2 3 | UNIT 0712 | PROJECT NUMBER & PHASE 0413000204

Dist	COUNTY	ROUTE	POST MILES TOTAL PROJECT	SHEET No.	TOTAL SHEETS
04	SCL	101,237	45.2/45.8, 2.7/3.3	452	736

6-13-18
REGISTERED CIVIL ENGINEER DATE

6-20-18
PLANS APPROVAL DATE

REGISTERED PROFESSIONAL ENGINEER
KIN Y. CHAN
No. 55391
Exp. 12/31/18
CIVIL
STATE OF CALIFORNIA

THE STATE OF CALIFORNIA OR ITS OFFICERS OR AGENTS SHALL NOT BE RESPONSIBLE FOR THE ACCURACY OR COMPLETENESS OF SCANNED COPIES OF THIS PLAN SHEET.

Y&C TRANSPORTATION CONSULTANTS, INC.
3250 Ramos Circle
Sacramento, CA 95827

VTA
3331 N First St
Building B
San Jose, CA 95134

NOTE:
FOR ACCURATE RIGHT OF WAY DATA, CONTACT RIGHT OF WAY ENGINEERING AT THE DISTRICT OFFICE.

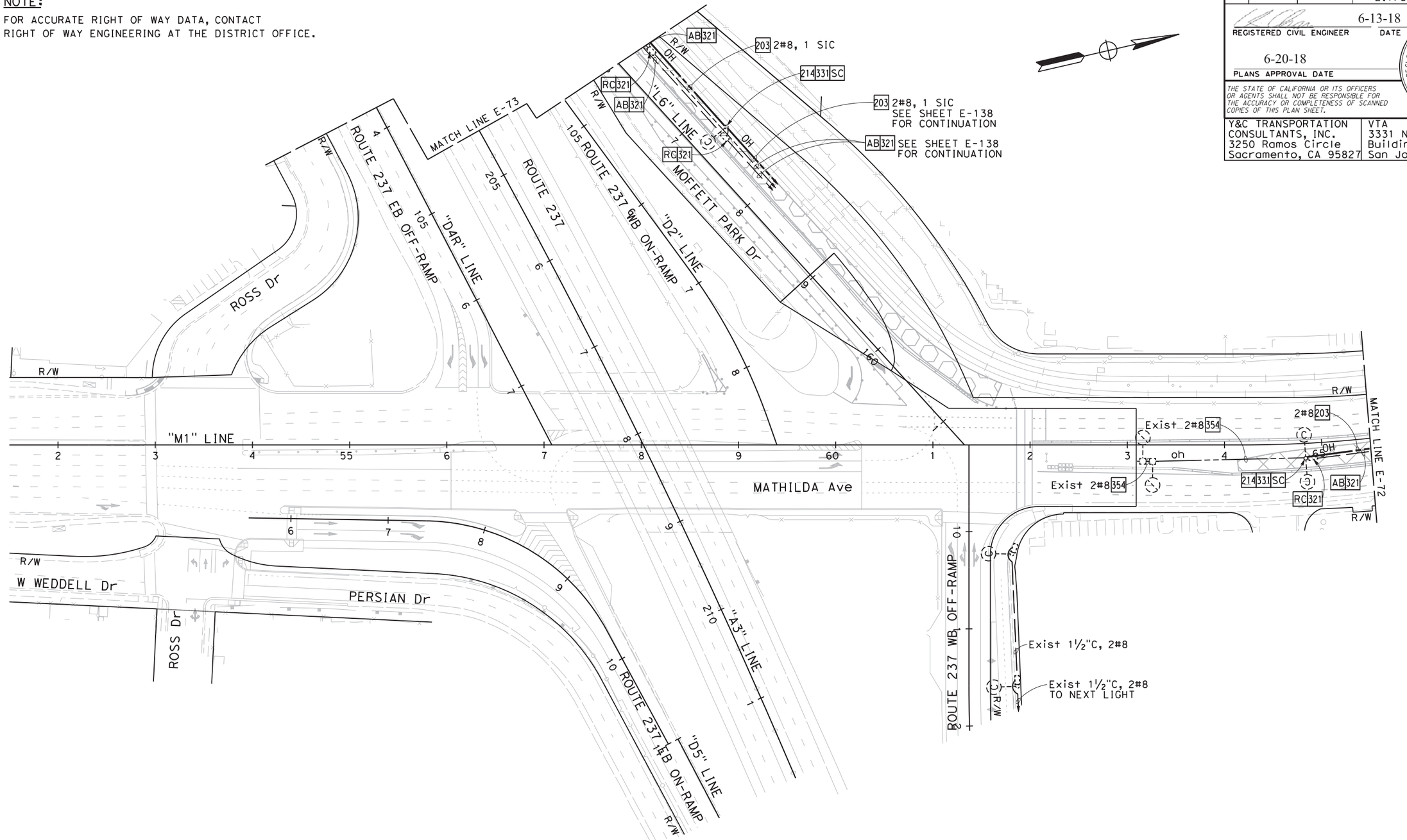

FOR NOTES AND LEGEND, SEE SHEETS E-46 TO E-48

APPROVED FOR ELECTRICAL WORK ONLY

TEMPORARY LIGHTING SYSTEM (CITY)
(STAGE 2 PHASE 2 TO STAGE 3 PHASE 2)

SCALE: 1" = 50'

E-71

REVISED BY	DATE REVISED

CALCULATED-DESIGNED BY: MENG YANG
CHECKED BY: DAN YAU
CONSULTANT FUNCTIONAL SUPERVISOR: TIMOTHY J. LEE
STATE OF CALIFORNIA - DEPARTMENT OF TRANSPORTATION
Caltrans

LAST REVISION 00-00-00
DATE PLOTTED => $DATE
TIME PLOTTED => $TIME

BORDER LAST REVISED 7/2/2010
USERNAME => $USER
DGN FILE => $REQUEST
RELATIVE BORDER SCALE IS IN INCHES 0 1 2 3
UNIT 0712
PROJECT NUMBER & PHASE 0413000204

NOTE:

FOR ACCURATE RIGHT OF WAY DATA, CONTACT
RIGHT OF WAY ENGINEERING AT THE DISTRICT OFFICE.

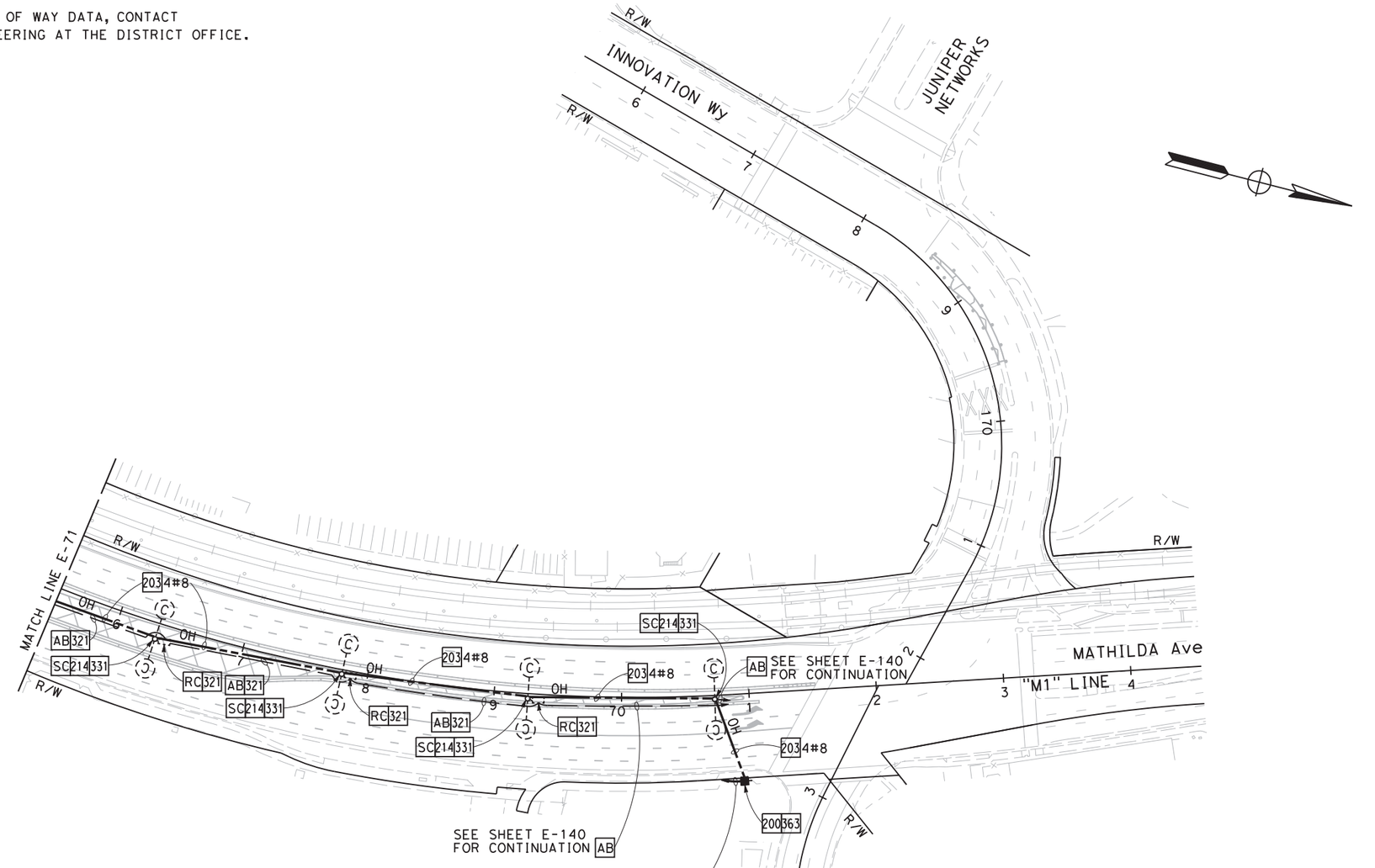

Dist	COUNTY	ROUTE	POST MILES TOTAL PROJECT	SHEET No.	TOTAL SHEETS
04	SCL	101,237	45.2/45.8, 2.7/3.3	453	736

6-13-18
REGISTERED CIVIL ENGINEER — DATE

6-20-18
PLANS APPROVAL DATE

REGISTERED PROFESSIONAL ENGINEER
KIN Y. CHAN
No. 55391
Exp. 12/31/18
CIVIL
STATE OF CALIFORNIA

THE STATE OF CALIFORNIA OR ITS OFFICERS OR AGENTS SHALL NOT BE RESPONSIBLE FOR THE ACCURACY OR COMPLETENESS OF SCANNED COPIES OF THIS PLAN SHEET.

Y&C TRANSPORTATION CONSULTANTS, INC.
3250 Ramos Circle
Sacramento, CA 95827

VTA
3331 N First St
Building B
San Jose, CA 95134

CALCULATED-DESIGNED BY: MENG YANG
CHECKED BY: DAN YAU
REVISED BY
DATE REVISED
CONSULTANT FUNCTIONAL SUPERVISOR: TIMOTHY J. LEE
STATE OF CALIFORNIA - DEPARTMENT OF TRANSPORTATION
Caltrans

FOR NOTES AND LEGEND, SEE SHEETS E-46 TO E-48

APPROVED FOR ELECTRICAL WORK ONLY

TEMPORARY LIGHTING SYSTEM (CITY)
(STAGE 2 PHASE 2 TO STAGE 3 PHASE 2)

SCALE: 1" = 50'

E-72

LAST REVISION 00-00-00
DATE PLOTTED => $DATE
TIME PLOTTED => $TIME

BORDER LAST REVISED 7/2/2010
USERNAME => $USER
DGN FILE => $REQUEST
RELATIVE BORDER SCALE IS IN INCHES 0 1 2 3
UNIT 0712
PROJECT NUMBER & PHASE 0413000204

Dist	COUNTY	ROUTE	POST MILES TOTAL PROJECT	SHEET No.	TOTAL SHEETS
04	SCL	101,237	45.2/45.8, 2.7/3.3	454	736

REGISTERED CIVIL ENGINEER 6-13-18 DATE

6-20-18
PLANS APPROVAL DATE

REGISTERED PROFESSIONAL ENGINEER KIN Y. CHAN No. 55391 Exp. 12/31/18 CIVIL STATE OF CALIFORNIA

THE STATE OF CALIFORNIA OR ITS OFFICERS OR AGENTS SHALL NOT BE RESPONSIBLE FOR THE ACCURACY OR COMPLETENESS OF SCANNED COPIES OF THIS PLAN SHEET.

Y&C TRANSPORTATION CONSULTANTS, INC.
3250 Ramos Circle
Sacramento, CA 95827

VTA
3331 N First St
Building B
San Jose, CA 95134

NOTE:
FOR ACCURATE RIGHT OF WAY DATA, CONTACT RIGHT OF WAY ENGINEERING AT THE DISTRICT OFFICE.

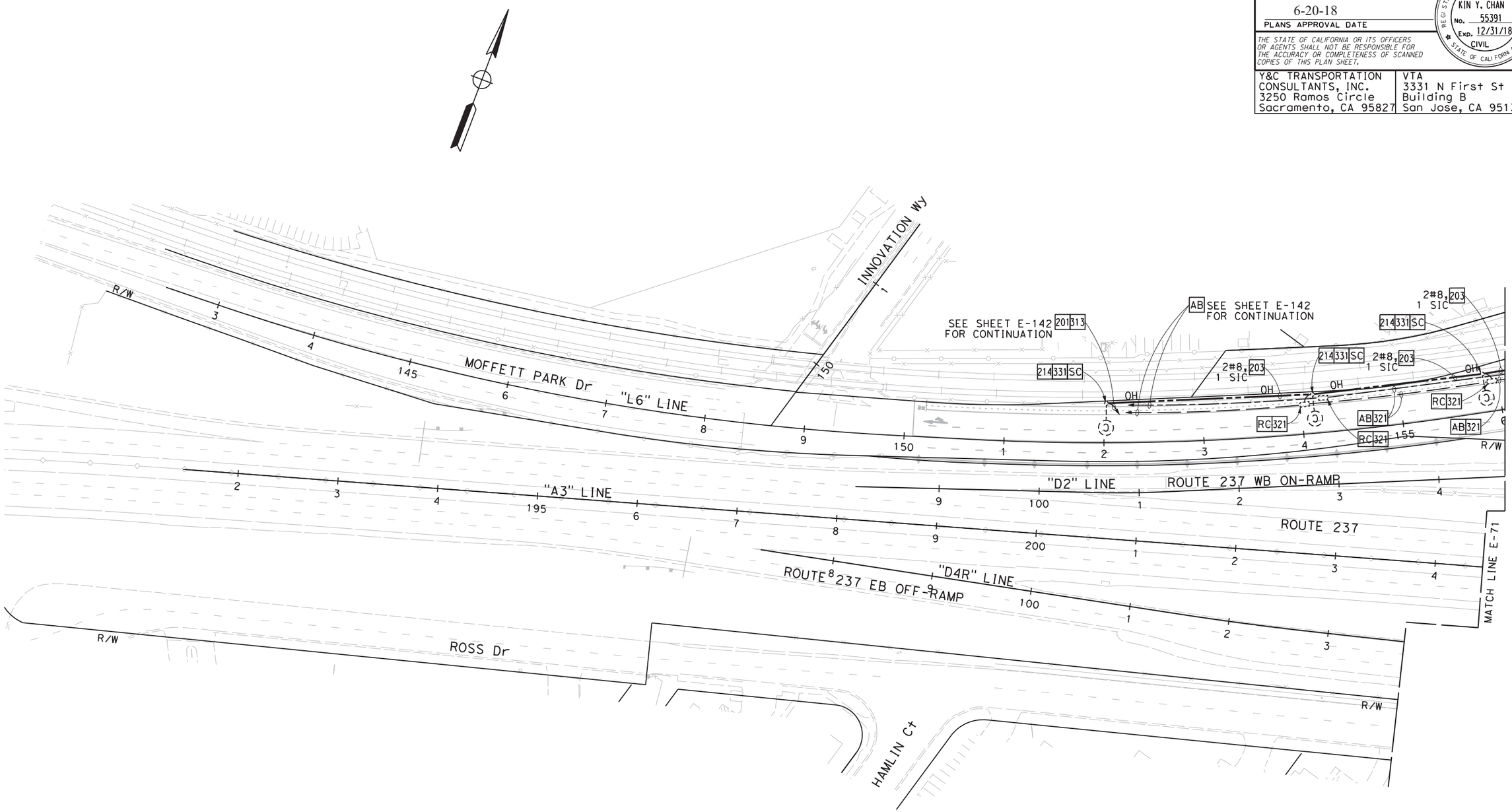

TEMPORARY LIGHTING SYSTEM (CITY)
(STAGE 2 PHASE 2)
SCALE: 1" = 50'

E-73

FOR NOTES AND LEGEND, SEE SHEETS E-46 TO E-48

APPROVED FOR ELECTRICAL WORK ONLY

STATE OF CALIFORNIA - DEPARTMENT OF TRANSPORTATION
Caltrans

CONSULTANT FUNCTIONAL SUPERVISOR: TIMOTHY J. LEE
CALCULATED-DESIGNED BY: MENG YANG
CHECKED BY: DAN YAU
REVISED BY
DATE REVISED

LAST REVISION 00-00-00
DATE PLOTTED => $DATE
TIME PLOTTED => $TIME

BORDER LAST REVISED 7/2/2010
USERNAME => $USER
DGN FILE => $REQUEST
RELATIVE BORDER SCALE IS IN INCHES 0 1 2 3
UNIT 0712
PROJECT NUMBER & PHASE 0413000204

NOTE:

FOR ACCURATE RIGHT OF WAY DATA, CONTACT
RIGHT OF WAY ENGINEERING AT THE DISTRICT OFFICE.

Dist	COUNTY	ROUTE	POST MILES TOTAL PROJECT	SHEET No.	TOTAL SHEETS
04	SCL	101,237	45.2/45.8, 2.7/3.3	455	736

6-13-18
REGISTERED CIVIL ENGINEER DATE

6-20-18
PLANS APPROVAL DATE

REGISTERED PROFESSIONAL ENGINEER
KIN Y. CHAN
No. 55391
Exp. 12/31/18
CIVIL
STATE OF CALIFORNIA

THE STATE OF CALIFORNIA OR ITS OFFICERS OR AGENTS SHALL NOT BE RESPONSIBLE FOR THE ACCURACY OR COMPLETENESS OF SCANNED COPIES OF THIS PLAN SHEET.

Y&C TRANSPORTATION CONSULTANTS, INC.
3250 Ramos Circle
Sacramento, CA 95827

VTA
3331 N First St
Building B
San Jose, CA 95134

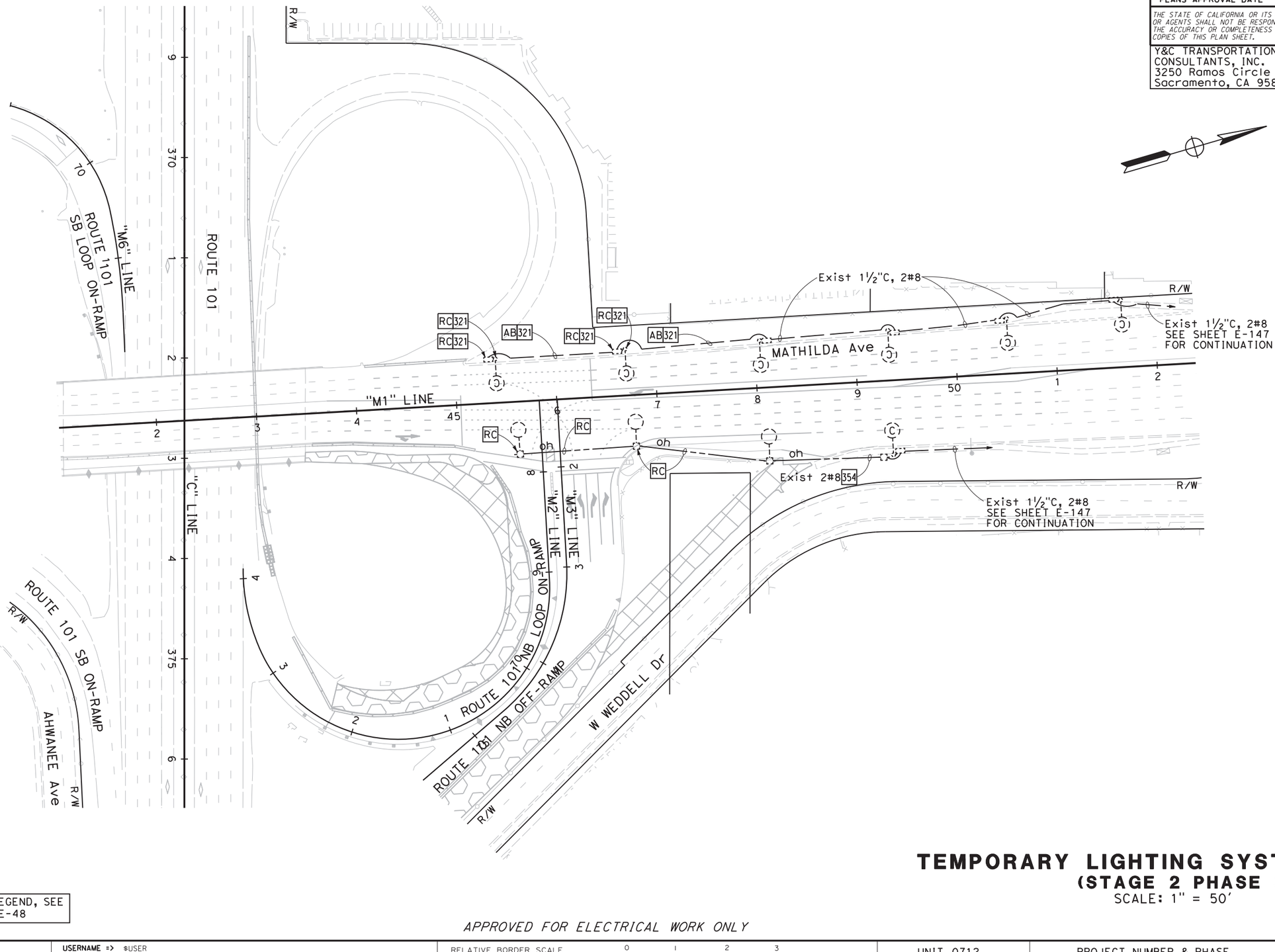

FOR NOTES AND LEGEND, SEE SHEETS E-46 TO E-48

TEMPORARY LIGHTING SYSTEM (CITY)
(STAGE 2 PHASE 3)

SCALE: 1" = 50'

E-74

APPROVED FOR ELECTRICAL WORK ONLY

STATE OF CALIFORNIA - DEPARTMENT OF TRANSPORTATION
Caltrans

CONSULTANT FUNCTIONAL SUPERVISOR: TIMOTHY J. LEE
CALCULATED-DESIGNED BY: MENG YANG
CHECKED BY: DAN YAU
REVISED BY / DATE REVISED

LAST REVISION 00-00-00
DATE PLOTTED => $DATE
TIME PLOTTED => $TIME

BORDER LAST REVISED 7/2/2010
USERNAME => $USER
DGN FILE => $REQUEST
RELATIVE BORDER SCALE IS IN INCHES 0 1 2 3
UNIT 0712
PROJECT NUMBER & PHASE 0413000204

NOTE:

FOR ACCURATE RIGHT OF WAY DATA, CONTACT
RIGHT OF WAY ENGINEERING AT THE DISTRICT OFFICE.

Dist	COUNTY	ROUTE	POST MILES TOTAL PROJECT	SHEET No.	TOTAL SHEETS
04	SCL	101,237	45.2/45.8, 2.7/3.3	456	736

6-13-18
REGISTERED CIVIL ENGINEER DATE

REGISTERED PROFESSIONAL ENGINEER
KIN Y. CHAN
No. 55391
Exp. 12/31/18
CIVIL
STATE OF CALIFORNIA

6-20-18
PLANS APPROVAL DATE

THE STATE OF CALIFORNIA OR ITS OFFICERS OR AGENTS SHALL NOT BE RESPONSIBLE FOR THE ACCURACY OR COMPLETENESS OF SCANNED COPIES OF THIS PLAN SHEET.

Y&C TRANSPORTATION CONSULTANTS, INC. 3250 Ramos Circle Sacramento, CA 95827	VTA 3331 N First St Building B San Jose, CA 95134

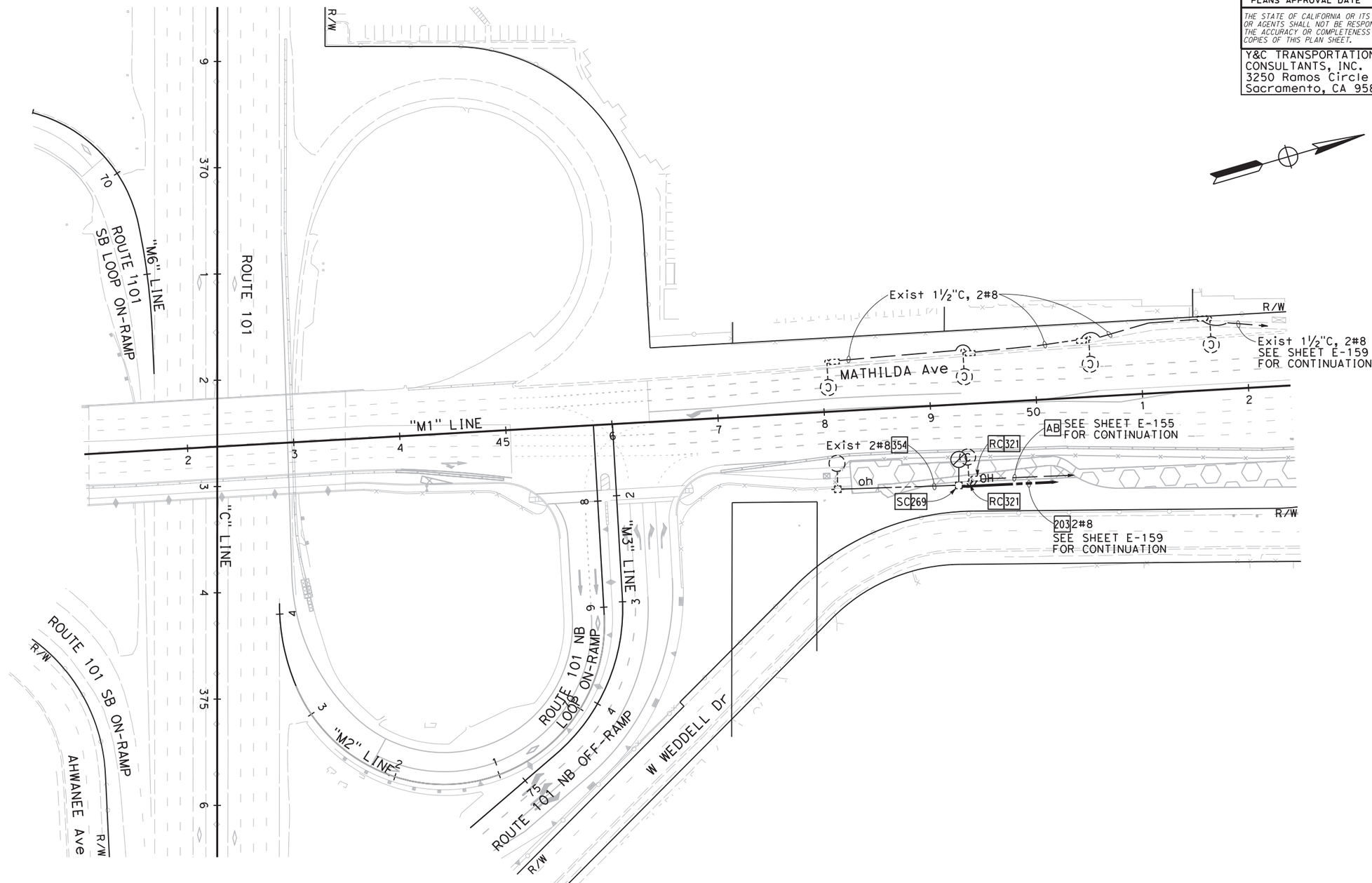

FOR NOTES AND LEGEND, SEE SHEETS E-46 TO E-48

TEMPORARY LIGHTING SYSTEM (CITY)
(STAGE 2 PHASE 4)
SCALE: 1" = 50'

E-75

APPROVED FOR ELECTRICAL WORK ONLY

CALCULATED-DESIGNED BY: MENG YANG
CHECKED BY: DAN YAU
REVISED BY / DATE REVISED
CONSULTANT FUNCTIONAL SUPERVISOR: TIMOTHY J. LEE
STATE OF CALIFORNIA - DEPARTMENT OF TRANSPORTATION
Caltrans

LAST REVISION 00-00-00
DATE PLOTTED => $DATE
TIME PLOTTED => $TIME

BORDER LAST REVISED 7/2/2010
USERNAME => $USER
DGN FILE => $REQUEST
RELATIVE BORDER SCALE IS IN INCHES 0 1 2 3
UNIT 0712
PROJECT NUMBER & PHASE 0413000204

NOTE:

FOR ACCURATE RIGHT OF WAY DATA, CONTACT
RIGHT OF WAY ENGINEERING AT THE DISTRICT OFFICE.

Dist	COUNTY	ROUTE	POST MILES TOTAL PROJECT	SHEET No.	TOTAL SHEETS
04	SCL	101,237	45.2/45.8, 2.7/3.3	457	736

6-13-18
REGISTERED CIVIL ENGINEER DATE

6-20-18
PLANS APPROVAL DATE

REGISTERED PROFESSIONAL ENGINEER
KIN Y. CHAN
No. 55391
Exp. 12/31/18
CIVIL
STATE OF CALIFORNIA

THE STATE OF CALIFORNIA OR ITS OFFICERS OR AGENTS SHALL NOT BE RESPONSIBLE FOR THE ACCURACY OR COMPLETENESS OF SCANNED COPIES OF THIS PLAN SHEET.

Y&C TRANSPORTATION CONSULTANTS, INC.
3250 Ramos Circle
Sacramento, CA 95827

VTA
3331 N First St
Building B
San Jose, CA 95134

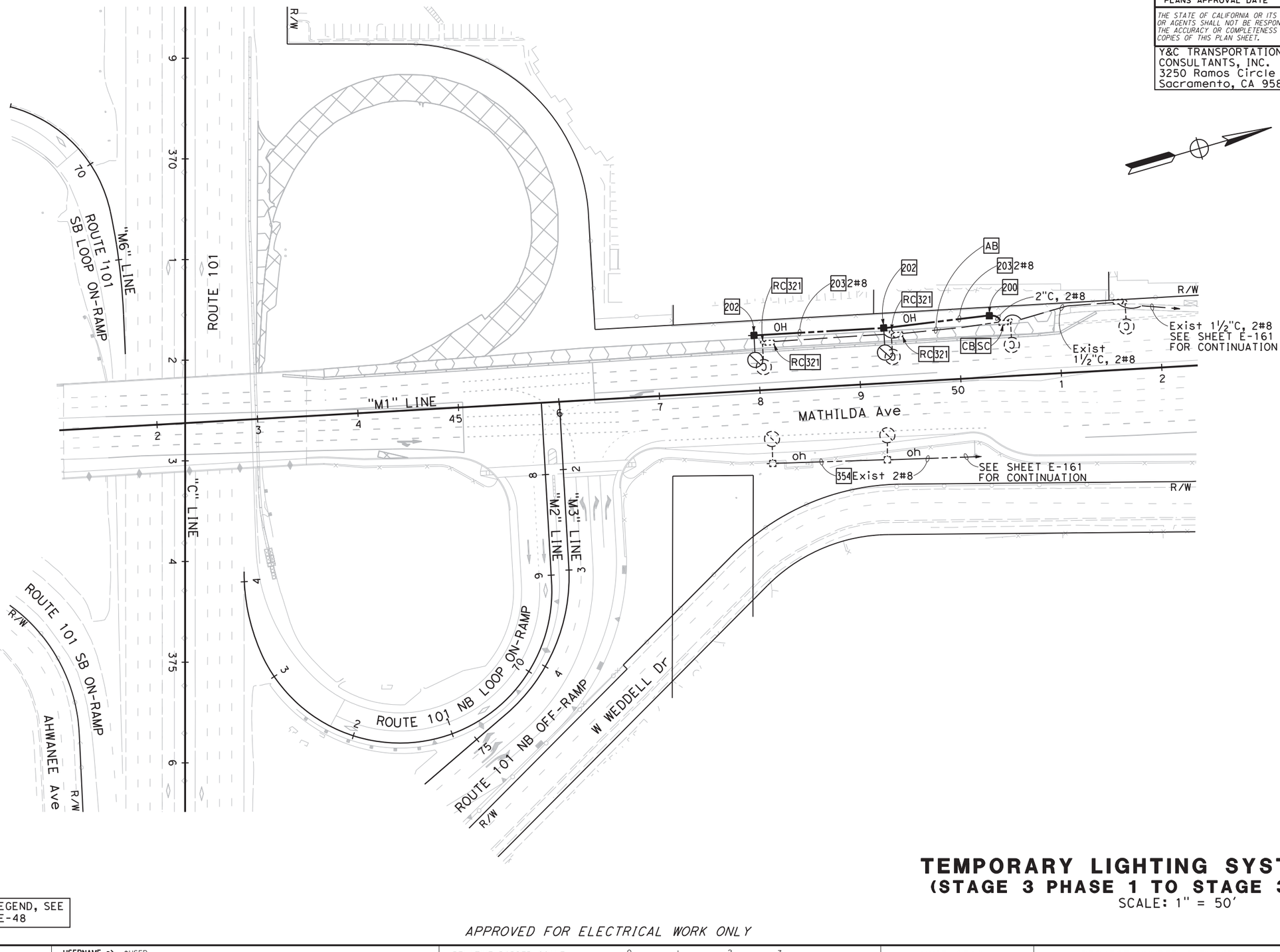

FOR NOTES AND LEGEND, SEE SHEETS E-46 TO E-48

TEMPORARY LIGHTING SYSTEM (CITY)
(STAGE 3 PHASE 1 TO STAGE 3 PHASE 2)

SCALE: 1" = 50'

E-76

APPROVED FOR ELECTRICAL WORK ONLY

STATE OF CALIFORNIA - DEPARTMENT OF TRANSPORTATION
Caltrans®

CONSULTANT FUNCTIONAL SUPERVISOR: TIMOTHY J. LEE
CALCULATED-DESIGNED BY: MENG YANG
CHECKED BY: DAN YAU
REVISED BY
DATE REVISED

LAST REVISION 00-00-00
DATE PLOTTED => $DATE
TIME PLOTTED => $TIME

BORDER LAST REVISED 7/2/2010
USERNAME => $USER
DGN FILE => $REQUEST
RELATIVE BORDER SCALE IS IN INCHES 0 1 2 3
UNIT 0712
PROJECT NUMBER & PHASE 0413000204

NOTE:

FOR ACCURATE RIGHT OF WAY DATA, CONTACT
RIGHT OF WAY ENGINEERING AT THE DISTRICT OFFICE.

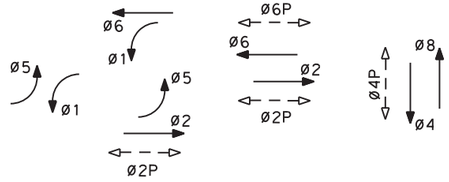

EXISTING PHASE DIAGRAM
STEADY DEMAND SEQUENCE
GPS EVUD

Dist	COUNTY	ROUTE	POST MILES TOTAL PROJECT	SHEET No.	TOTAL SHEETS
04	SCL	101,237	45.2/45.8, 2.7/3.3	458	736

6-13-18
REGISTERED CIVIL ENGINEER — DATE

KIN Y. CHAN
No. 55391
Exp. 12/31/18
CIVIL
REGISTERED PROFESSIONAL ENGINEER
STATE OF CALIFORNIA

6-20-18
PLANS APPROVAL DATE

THE STATE OF CALIFORNIA OR ITS OFFICERS OR AGENTS SHALL NOT BE RESPONSIBLE FOR THE ACCURACY OR COMPLETENESS OF SCANNED COPIES OF THIS PLAN SHEET.

Y&C TRANSPORTATION CONSULTANTS, INC.
3250 Ramos Circle
Sacramento, CA 95827

VTA
3331 N First St
Building B
San Jose, CA 95134

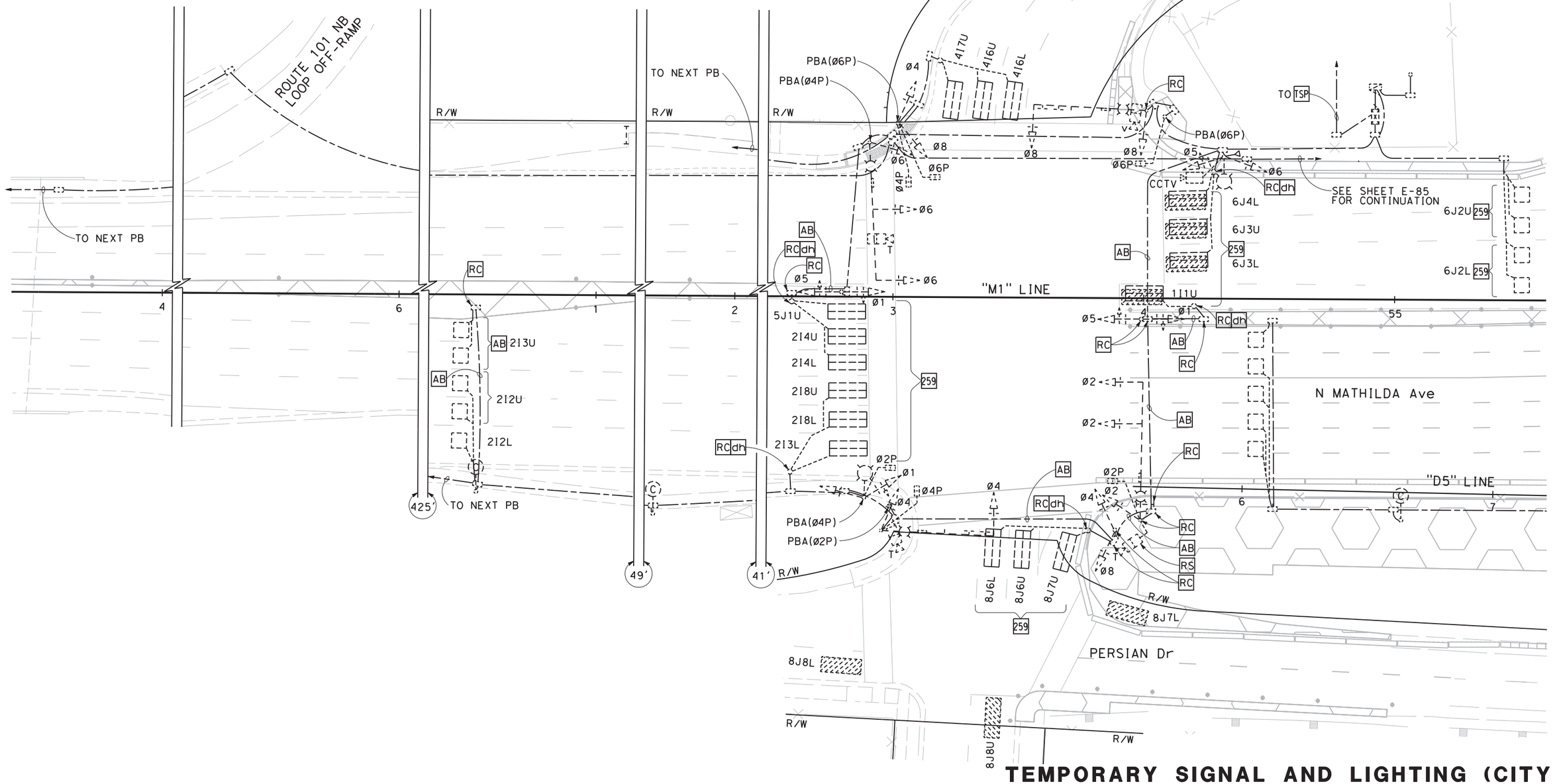

FOR NOTES AND LEGEND, SEE SHEETS E-46 TO E-48

CITY STREET LOCATION 4 (EXISTING)

APPROVED FOR ELECTRICAL WORK ONLY

TEMPORARY SIGNAL AND LIGHTING (CITY)

(STAGE 1 PHASE 1)

SCALE: 1" = 20'

E-77

REVISED BY | DATE REVISED
MENG YANG | DAN YAU
CALCULATED-DESIGNED BY | CHECKED BY
CONSULTANT FUNCTIONAL SUPERVISOR
TIMOTHY J. LEE

STATE OF CALIFORNIA - DEPARTMENT OF TRANSPORTATION
Caltrans

DATE PLOTTED => $DATE
TIME PLOTTED => $TIME
LAST REVISION 00-00-00

BORDER LAST REVISED 7/2/2010 | USERNAME => $USER | DGN FILE => $REQUEST | RELATIVE BORDER SCALE IS IN INCHES 0 1 2 3 | UNIT 0712 | PROJECT NUMBER & PHASE 0413000204

NOTES:

1. FOR ACCURATE RIGHT OF WAY DATA, CONTACT RIGHT OF WAY ENGINEERING AT THE DISTRICT OFFICE.
2. FOR SCHEDULE, SEE SHEET E-79.

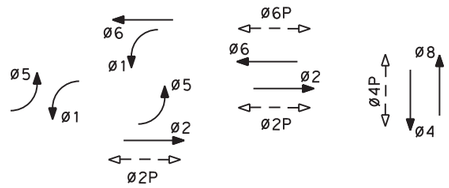

Dist	COUNTY	ROUTE	POST MILES TOTAL PROJECT	SHEET No.	TOTAL SHEETS
04	SCL	101,237	45.2/45.8, 2.7/3.3	459	736

6-13-18
REGISTERED CIVIL ENGINEER — DATE

KIN Y. CHAN
No. 55391
Exp. 12/31/18
CIVIL
REGISTERED PROFESSIONAL ENGINEER
STATE OF CALIFORNIA

6-20-18
PLANS APPROVAL DATE

THE STATE OF CALIFORNIA OR ITS OFFICERS OR AGENTS SHALL NOT BE RESPONSIBLE FOR THE ACCURACY OR COMPLETENESS OF SCANNED COPIES OF THIS PLAN SHEET.

Y&C TRANSPORTATION CONSULTANTS, INC. 3250 Ramos Circle Sacramento, CA 95827	VTA 3331 N First St Building B San Jose, CA 95134

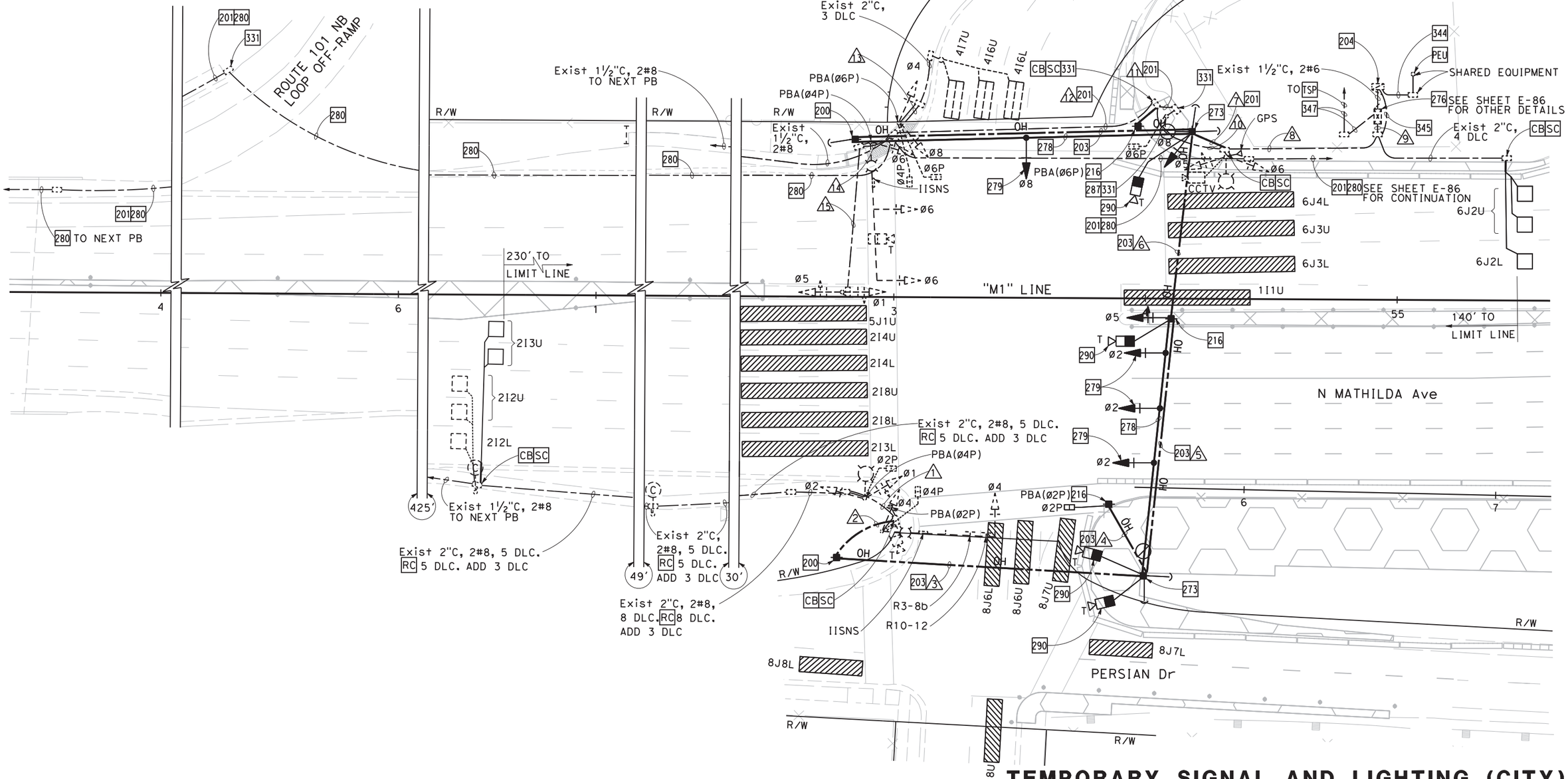

TEMPORARY SIGNAL AND LIGHTING (CITY)

(STAGE 1 PHASE 1)

SCALE: 1" = 20'

CITY STREET LOCATION 4 (PROPOSED)

APPROVED FOR ELECTRICAL WORK ONLY

FOR NOTES AND LEGEND, SEE SHEETS E-46 TO E-48

E-78

STATE OF CALIFORNIA - DEPARTMENT OF TRANSPORTATION
CONSULTANT FUNCTIONAL SUPERVISOR: TIMOTHY J. LEE
CALCULATED-DESIGNED BY: MENG YANG
CHECKED BY: DAN YAU
REVISED BY | DATE REVISED

DATE PLOTTED => $DATE
TIME PLOTTED => $TIME
LAST REVISION 00-00-00

BORDER LAST REVISED 7/2/2010
USERNAME => $USER
DGN FILE => $REQUEST
RELATIVE BORDER SCALE IS IN INCHES 0 1 2 3
UNIT 0712
PROJECT NUMBER & PHASE 0413000204

Dist	COUNTY	ROUTE	POST MILES TOTAL PROJECT	SHEET No.	TOTAL SHEETS
04	SCL	101,237	45.2/45.8, 2.7/3.3	460	736

6-13-18
REGISTERED CIVIL ENGINEER — DATE

REGISTERED PROFESSIONAL ENGINEER
KIN Y. CHAN
No. 55391
Exp. 12/31/18
CIVIL
STATE OF CALIFORNIA

6-20-18
PLANS APPROVAL DATE

THE STATE OF CALIFORNIA OR ITS OFFICERS OR AGENTS SHALL NOT BE RESPONSIBLE FOR THE ACCURACY OR COMPLETENESS OF SCANNED COPIES OF THIS PLAN SHEET.

Y&C TRANSPORTATION CONSULTANTS, INC.
3250 Ramos Circle
Sacramento, CA 95827

VTA
3331 N First St
Building B
San Jose, CA 95134

SCHEDULE: (FOR SHEET E-78)

CONDUCTOR AND CONDUIT SCHEDULE

CONDUCTOR SCHEDULE	No. OF CONDUCTORS — CONDUIT RUN NUMBER														
	1	2	3	4	5	6	7	8	9	10	11	12	13	14	15
No. 14 CONDUCTORS															
Ø1	3	3	3		3	3	3	6	6	3		3		3	3
Ø2	3	3	3		3	3	3	3	3						
Ø4		3	3		3	3	3	6	6	3		3	3		
Ø5						3	3	6	6	3		3		3	3
Ø6								3	3	3		3		3	
Ø8							3	6	6	3		3	3		
Ø2P	2	2	2	2	2	2	2	2	2						
Ø4P		2	2		2	2	2	4	4	2		2	2		
Ø6P								2	2	2	2	2	2		
PBA Ø2P		1	1	1	1	1	1	1	1						
PBA Ø4P	1	1	1		1	1	1	2	2	1		1		1	
PBA Ø6P								2	2	1	1	1	1		
PBA COMMON	1	1	1	1	1	1	1	2	2	1	1	1	1	1	
SPARES	3	3	3		3	3	3	6	6	3	3	3	3	3	3
TOTAL No. 14	13	19	19	4	19	22	25	51	51	25	7	25	15	14	9
No. 8 CONDUCTORS															
LIGHTING & IISNS	2	2	2		2	2	2	4		2		2		2	
SIGNAL NEUTRAL	1	1	1		1	1	1	2	2	1	1	1	1	1	1
TOTAL No. 8	3	3	3		3	3	3	6	2	3	1	3	1	3	1
DETECTOR CABLES (DLC)															
1I1U								1⁻	1⁻						
2I2U	1⁻/1⁺	1	1		1	1	1	2⁻/2⁺	2⁻/2⁺						
2I2L	1⁻/1⁺	1	1		1	1	1	1⁻/1⁺	1⁻/1⁺						
2I3U	1⁻/1⁺	1	1		1	1	1	2⁻/2⁺	2⁻/2⁺						
2I3L	1⁻							1⁻	1⁻						
2I4U								1⁻	1⁻	1⁻		1⁻		1⁻	1⁻
2I4L								1⁻	1⁻	1⁻		1⁻		1⁻	1⁻
2I8U	1⁻							1⁻	1⁻						
2I8L	1⁻							1⁻	1⁻						
4I6U								1	1	1		1	1		
4I6L								1	1	1		1	1		
4I7U								1	1	1		1	1		
5J1U								1⁻	1⁻	1⁻		1⁻		1⁻	1⁻
6J2U									1						
6J2L									1						
6J3U								1⁻	1⁻						
6J3L								1⁻	1⁻						
6J4L								1⁻	1⁻						
TOTAL DETECTOR CABLES	3	3	3		3	3	3	6	8	3		3	3		
THERMAL VEHICLE DETECTION CABLE		1	1		3	4	5	1⁻/5*	1⁻/5*	1		1	1	1	
CCTV CABLE									1						
GPS EVUC								1	1						
CONDUIT SIZE (INCHES)	3	OH	OH	OH	OH	OH	4	2-3"	2-3"	3	3	3	3	2	2
NEW/EXISTING CONDUIT	E	N	N	N	N	N	N	E	E	E	E	E	E	E	E
% FILL	9						18	25	25	22	3	16	8	22	7

- REMOVE Exist CONDUCTOR(S)/CABLE(S).
+ ADD NEW CONDUCTOR(S)/CABLE(S).
* REMOVE Exist CONDUCTOR(S)/CABLE(S). ADD NEW CONDUCTOR(S)/CABLE(S).

FOR NOTES AND LEGEND, SEE SHEETS E-46 TO E-48

CITY STREET LOCATION 4 (PROPOSED)

TEMPORARY SIGNAL AND LIGHTING (CITY)
(STAGE 1 PHASE 1)

E-79

REVISED BY | DATE REVISED
MENG YANG | DAN YAU
CALCULATED-DESIGNED BY | CHECKED BY
CONSULTANT FUNCTIONAL SUPERVISOR: TIMOTHY J. LEE
STATE OF CALIFORNIA - DEPARTMENT OF TRANSPORTATION
Caltrans

LAST REVISION: 00-00-00 | DATE PLOTTED => $DATE | TIME PLOTTED => $TIME

BORDER LAST REVISED 7/2/2010 | USERNAME => $USER | DGN FILE => $REQUEST | RELATIVE BORDER SCALE IS IN INCHES 0 1 2 3 | UNIT 0712 | PROJECT NUMBER & PHASE 0413000204

NOTE:

FOR ACCURATE RIGHT OF WAY DATA, CONTACT
RIGHT OF WAY ENGINEERING AT THE DISTRICT OFFICE.

Dist	COUNTY	ROUTE	POST MILES TOTAL PROJECT	SHEET No.	TOTAL SHEETS
04	SCL	101,237	45.2/45.8, 2.7/3.3	461	736

6-13-18
REGISTERED CIVIL ENGINEER — DATE

KIN Y. CHAN
No. 55391
Exp. 12/31/18
CIVIL
REGISTERED PROFESSIONAL ENGINEER
STATE OF CALIFORNIA

6-20-18
PLANS APPROVAL DATE

THE STATE OF CALIFORNIA OR ITS OFFICERS OR AGENTS SHALL NOT BE RESPONSIBLE FOR THE ACCURACY OR COMPLETENESS OF SCANNED COPIES OF THIS PLAN SHEET.

Y&C TRANSPORTATION CONSULTANTS, INC.
3250 Ramos Circle
Sacramento, CA 95827

VTA
3331 N First St
Building B
San Jose, CA 95134

EXISTING PHASE DIAGRAM

STEADY DEMAND SEQUENCE

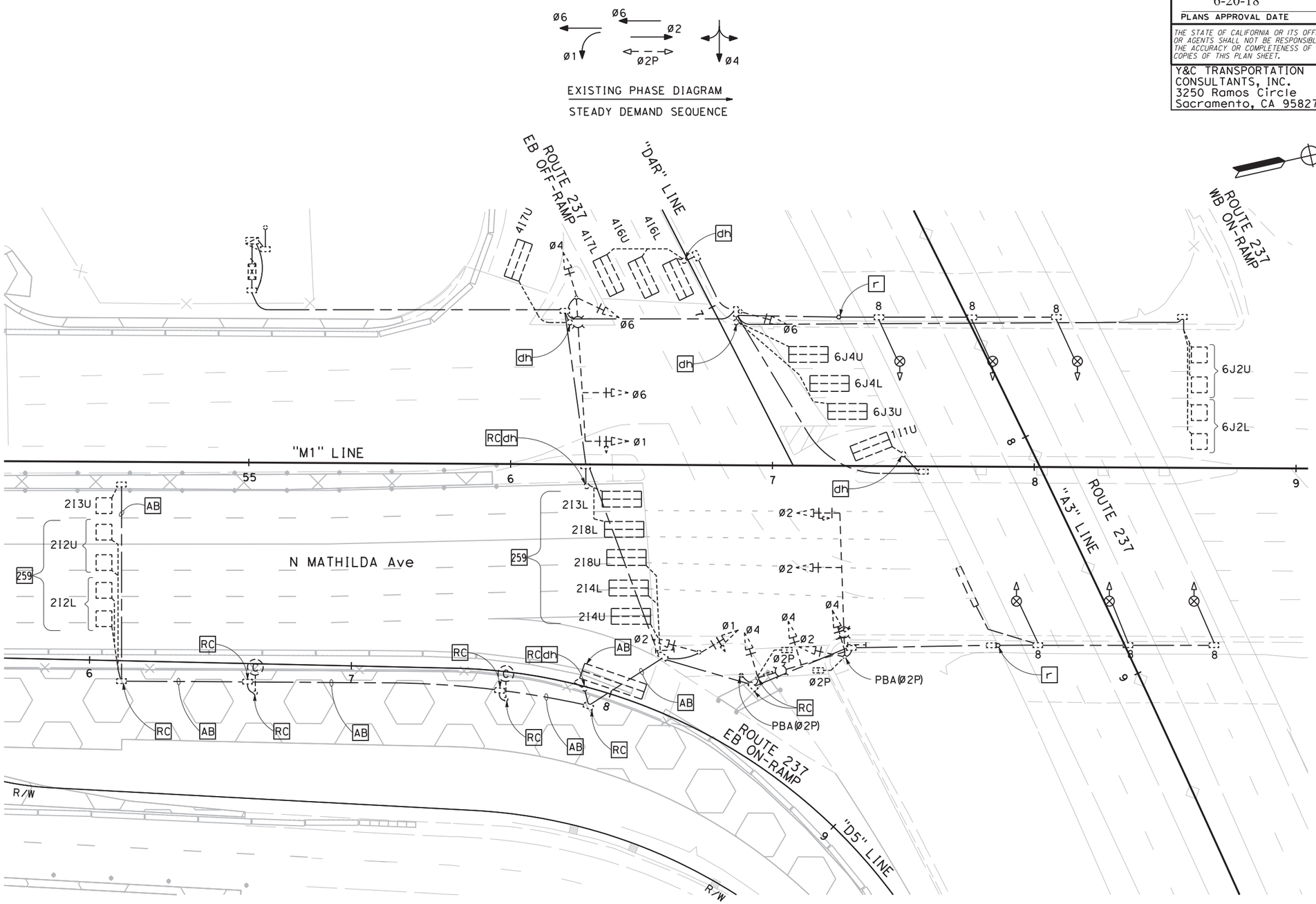

FOR NOTES AND LEGEND, SEE SHEETS E-46 TO E-48

CITY STREET LOCATION 5 (EXISTING)

APPROVED FOR ELECTRICAL WORK ONLY

TEMPORARY SIGNAL AND LIGHTING (CITY)

(STAGE 1 PHASE 1)

SCALE: 1" = 20'

E-80

REVISED BY	DATE REVISED
MENG YANG	
DAN YAU	

CALCULATED-DESIGNED BY

CHECKED BY

CONSULTANT FUNCTIONAL SUPERVISOR: TIMOTHY J. LEE

STATE OF CALIFORNIA - DEPARTMENT OF TRANSPORTATION

Caltrans

LAST REVISION 00-00-00

DATE PLOTTED => $DATE

TIME PLOTTED => $TIME

BORDER LAST REVISED 7/2/2010

USERNAME => $USER

DGN FILE => $REQUEST

RELATIVE BORDER SCALE IS IN INCHES 0 1 2 3

UNIT 0712

PROJECT NUMBER & PHASE 0413000204

NOTES:

1. FOR ACCURATE RIGHT OF WAY DATA, CONTACT RIGHT OF WAY ENGINEERING AT THE DISTRICT OFFICE.
2. FOR SCHEDULES, SEE SHEET E-82.

Dist	COUNTY	ROUTE	POST MILES TOTAL PROJECT	SHEET No.	TOTAL SHEETS
04	SCL	101,237	45.2/45.8, 2.7/3.3	462	736

6-13-18
REGISTERED CIVIL ENGINEER — DATE

REGISTERED PROFESSIONAL ENGINEER
KIN Y. CHAN
No. 55391
Exp. 12/31/18
CIVIL
STATE OF CALIFORNIA

6-20-18
PLANS APPROVAL DATE

THE STATE OF CALIFORNIA OR ITS OFFICERS OR AGENTS SHALL NOT BE RESPONSIBLE FOR THE ACCURACY OR COMPLETENESS OF SCANNED COPIES OF THIS PLAN SHEET.

Y&C TRANSPORTATION CONSULTANTS, INC.
3250 Ramos Circle
Sacramento, CA 95827

VTA
3331 N First St
Building B
San Jose, CA 95134

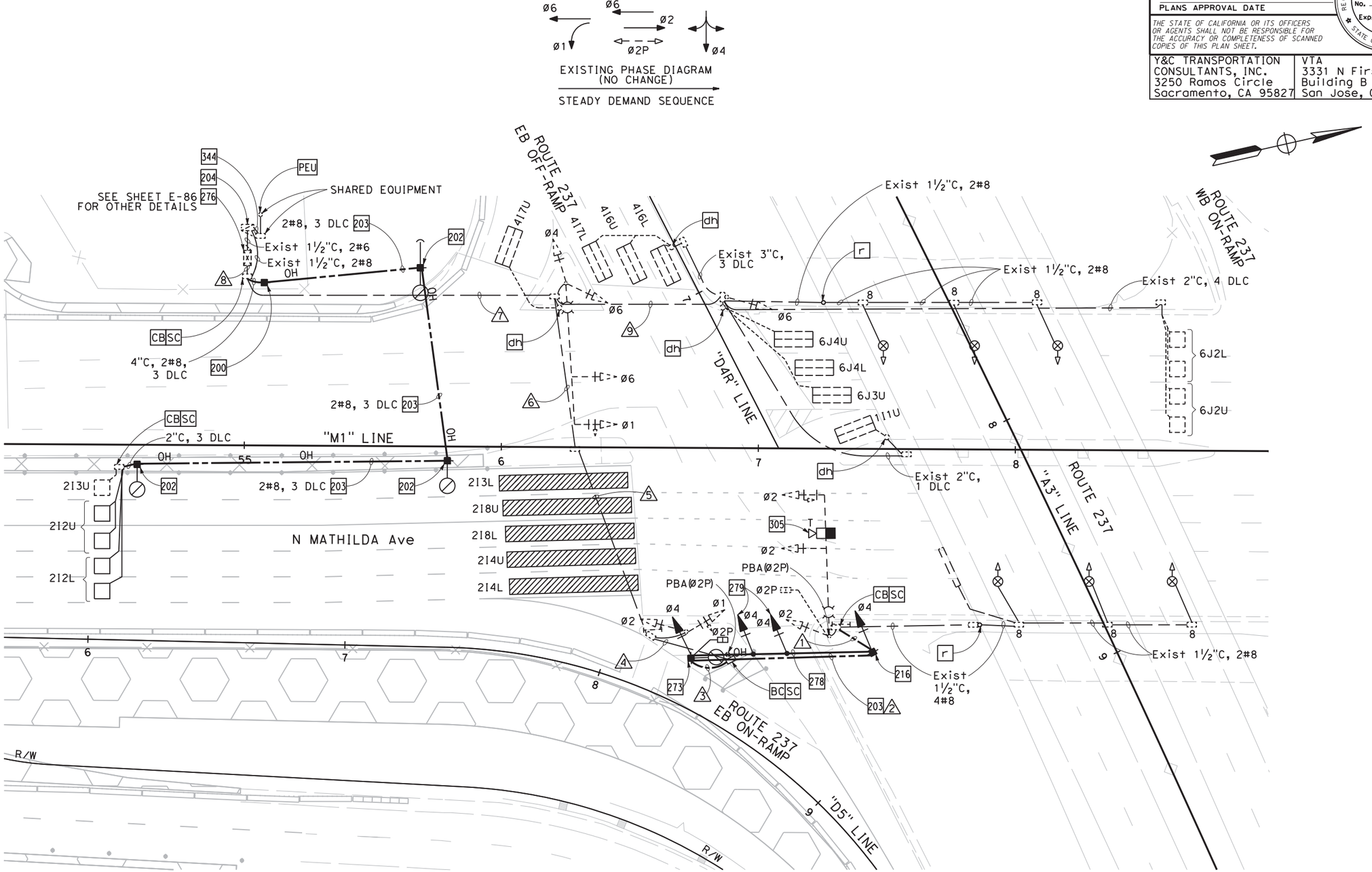

FOR NOTES AND LEGEND, SEE SHEETS E-46 TO E-48

CITY STREET LOCATION 5 (PROPOSED)

APPROVED FOR ELECTRICAL WORK ONLY

TEMPORARY SIGNAL AND LIGHTING (CITY)

(STAGE 1 PHASE 1)

SCALE: 1" = 20'

E-81

REVISED BY	DATE REVISED
MENG YANG	DAN YAU

CALCULATED-DESIGNED BY
CHECKED BY

CONSULTANT FUNCTIONAL SUPERVISOR: TIMOTHY J.LEE

STATE OF CALIFORNIA - DEPARTMENT OF TRANSPORTATION

Caltrans

LAST REVISION 00-00-00
DATE PLOTTED => $DATE
TIME PLOTTED => $TIME

BORDER LAST REVISED 7/2/2010
USERNAME => $USER
DGN FILE => $REQUEST
RELATIVE BORDER SCALE IS IN INCHES 0 1 2 3
UNIT 0712
PROJECT NUMBER & PHASE 0413000204

SCHEDULES: (FOR SHEET E-81)

CONDUCTOR AND CONDUIT SCHEDULE

CONDUCTOR SCHEDULE	No. OF CONDUCTORS IN CONDUIT RUN NUMBER 1	2	3	4	5	6	7	8	9
No. 14 CONDUCTORS									
Ø1					3	3	3	3	
Ø2	3	3	3	3	3	3	3	3	
Ø4		3	3	3	3	3	3	3	
Ø6							3	3	3
Ø2P	2	2	2	2	2	2	2	2	
PBA Ø2P	1	1	1	1	1	1	1	1	
PBA COMMON	1	1	1	1	1	1	1	1	
SPARES	3	3	3	3	3	3	6	6	3
TOTAL No. 14	10	13	13	13	16	16	22	22	6
No. 8 CONDUCTORS									
LIGHTING	2	2	2	2	2	2	2	2	2
SIGN ILLUMINATION	2	2	2	2	2	2	2		2
SIGNAL NEUTRAL	1	1	1	1	1	1	1	1	1
TOTAL No. 8	5	5	5	5	5	5	5	3	5
DETECTOR CABLES (DLC)									
1I1U							1	1	1
2I2U					2⁻	2⁻	2⁻	2⁻ 1+	
2I2L					2⁻	2⁻	2⁻	2⁻ 1+	
2I3U					1⁻	1⁻	1⁻	1⁻ 1+	
2I3L						1⁻	1⁻	1⁻	
2I4U					1⁻	1⁻	1⁻	1⁻	
2I4L					1⁻	1⁻	1⁻	1⁻	
2I8U					1⁻	1⁻	1⁻	1⁻	
2I8L						1⁻	1⁻	1⁻	
4I6U							1	1	1
4I6L							1	1	1
4I7U							1	1	
4I7L							1	1	1
6J2U							2	2	2
6J2L							2	2	2
6J3U							1	1	1
6J3L									
6J4U							1	1	1
6J4L							1	1	1
TOTAL DETECTOR CABLES						3	12	15	11
THERMAL VEHICLE DETECTION CABLE	1	1	1	1+	1+	1+	1+	1+	1+
CONDUIT SIZE (INCHES)	3	OH	3	2	3½	3½	2-3"	2-3"	3
NEW/EXISTING CONDUIT	N	N	N	E	E	E	E	E	E
% FILL	11		11	25	9	9	15	17	19

- REMOVE Exist CONDUCTOR(S)/CABLE(S).
+ ADD NEW CONDUCTOR(S)/CABLE(S).

FOR NOTES AND LEGEND, SEE SHEETS E-46 TO E-48

Dist	COUNTY	ROUTE	POST MILES TOTAL PROJECT	SHEET No.	TOTAL SHEETS
04	SCL	101,237	45.2/45.8, 2.7/3.3	463	736

6-13-18
REGISTERED CIVIL ENGINEER — DATE

REGISTERED PROFESSIONAL ENGINEER
KIN Y. CHAN
No. 55391
Exp. 12/31/18
CIVIL
STATE OF CALIFORNIA

6-20-18
PLANS APPROVAL DATE

THE STATE OF CALIFORNIA OR ITS OFFICERS OR AGENTS SHALL NOT BE RESPONSIBLE FOR THE ACCURACY OR COMPLETENESS OF SCANNED COPIES OF THIS PLAN SHEET.

Y&C TRANSPORTATION CONSULTANTS, INC.
3250 Ramos Circle
Sacramento, CA 95827

VTA
3331 N First St
Building B
San Jose, CA 95134

REVISED BY | DATE REVISED
MENG YANG | DAN YAU
CALCULATED-DESIGNED BY | CHECKED BY
CONSULTANT FUNCTIONAL SUPERVISOR: TIMOTHY J. LEE
STATE OF CALIFORNIA - DEPARTMENT OF TRANSPORTATION — Caltrans

TEMPORARY SIGNAL AND LIGHTING (CITY)
(STAGE 1 PHASE 1)

CITY STREET LOCATION 5 (PROPOSED)
APPROVED FOR ELECTRICAL WORK ONLY

E-82

LAST REVISION 00-00-00 | DATE PLOTTED => $DATE | TIME PLOTTED => $TIME

NOTES:

1. FOR ACCURATE RIGHT OF WAY DATA, CONTACT RIGHT OF WAY ENGINEERING AT THE DISTRICT OFFICE.
2. FOR SCHEDULES, SEE SHEET E-84.

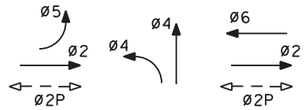

EXISTING PHASE DIAGRAM
(NO CHANGE)

STEADY DEMAND SEQUENCE

Dist	COUNTY	ROUTE	POST MILES TOTAL PROJECT	SHEET No.	TOTAL SHEETS
04	SCL	101,237	45.2/45.8, 2.7/3.3	464	736

6-13-18
REGISTERED CIVIL ENGINEER — DATE

6-20-18
PLANS APPROVAL DATE

REGISTERED PROFESSIONAL ENGINEER
KIN Y. CHAN
No. 55391
Exp. 12/31/18
CIVIL
STATE OF CALIFORNIA

THE STATE OF CALIFORNIA OR ITS OFFICERS OR AGENTS SHALL NOT BE RESPONSIBLE FOR THE ACCURACY OR COMPLETENESS OF SCANNED COPIES OF THIS PLAN SHEET.

Y&C TRANSPORTATION CONSULTANTS, INC. 3250 Ramos Circle Sacramento, CA 95827	VTA 3331 N First St Building B San Jose, CA 95134

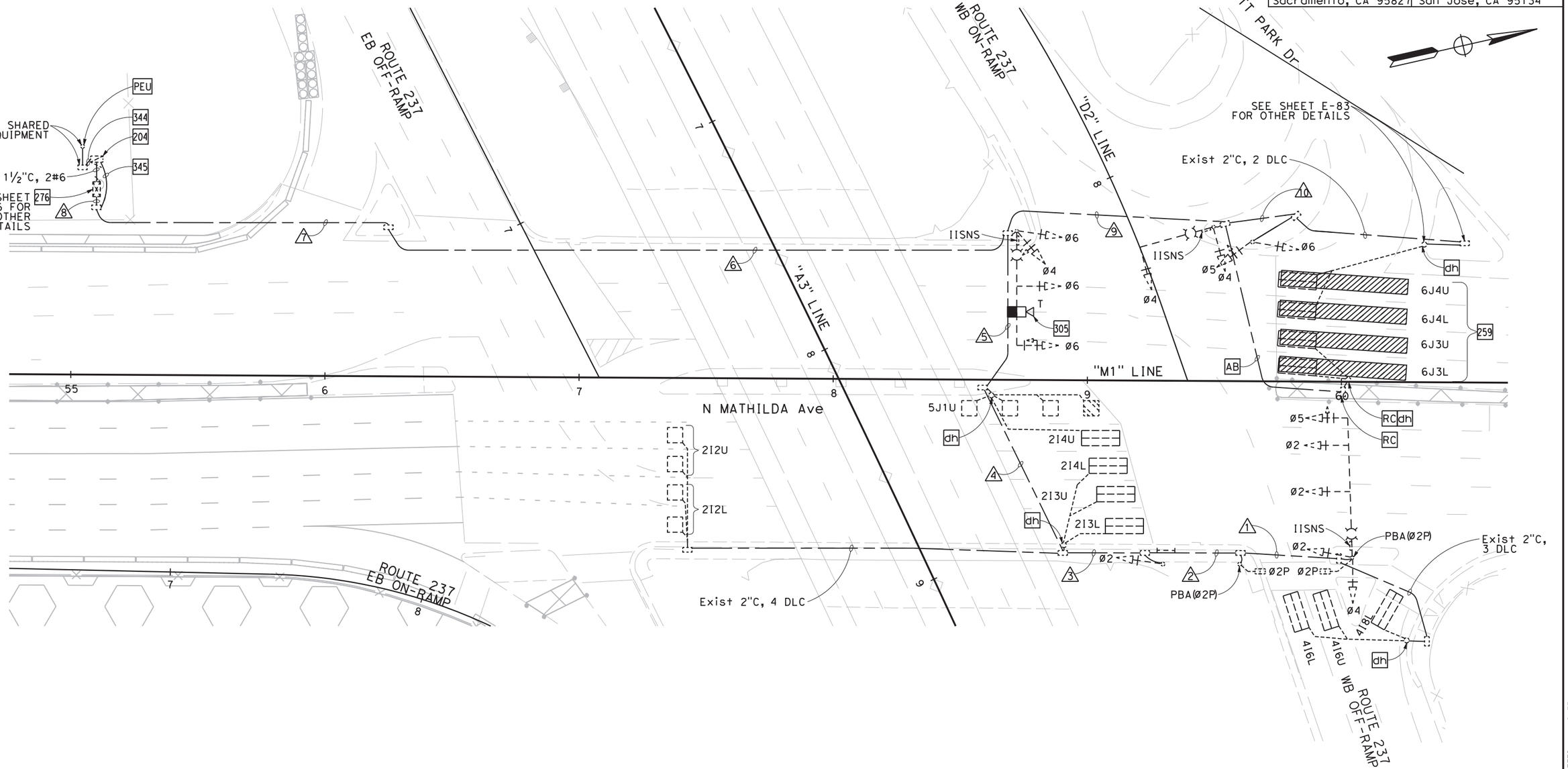

FOR NOTES AND LEGEND, SEE SHEETS E-46 TO E-48

CITY STREET LOCATION 6 (PROPOSED)

APPROVED FOR ELECTRICAL WORK ONLY

TEMPORARY SIGNAL AND LIGHTING (CITY)
(STAGE 1 PHASE 1)

SCALE: 1" = 20'

E-83

MENG YANG — CALCULATED-DESIGNED BY
DAN YAU — CHECKED BY
CONSULTANT FUNCTIONAL SUPERVISOR: TIMOTHY J. LEE
STATE OF CALIFORNIA - DEPARTMENT OF TRANSPORTATION
Caltrans

REVISED BY | DATE REVISED

LAST REVISION 00-00-00 | DATE PLOTTED => $DATE | TIME PLOTTED => $TIME

BORDER LAST REVISED 7/2/2010 | USERNAME => $USER | DGN FILE => $REQUEST | RELATIVE BORDER SCALE IS IN INCHES 0 1 2 3 | UNIT 0712 | PROJECT NUMBER & PHASE 0413000204

SCHEDULES: (FOR SHEET E-83)

CONDUCTOR AND CONDUIT SCHEDULE

CONDUCTOR SCHEDULE	No. OF CONDUCTORS CONDUIT RUN NUMBER 1	2	3	4	5	6	7	8	9	10
No. 14 CONDUCTORS										
Ø2	3	3	3	3	3	3	3			
Ø4	3	3	3	3	3	6	6	6	3	3
Ø5	3	3	3	3	3	6	6	6	3	
Ø6						3	3	3	3	3
Ø2P	2	2	2	2	2	2	2	2		
PBA Ø2P	1	1	1	1	1	1	1	1		
PBA COMMON	1	1	1	1	1	1	1	1		
SPARES	3	3	3	3	3	6	6	6	3	3
TOTAL No. 14	16	16	16	16	16	28	28	28	12	9
No. 8 CONDUCTORS										
LIGHTING	2	2	2	2	2	2	2		2	
IISNS	2	2	2	2	2	2	2		2	
SIGNAL NEUTRAL	1	1	1	1	1	2	2	2	1	1
TOTAL No. 8	5	5	5	5	5	6	6	2	5	1
DETECTOR CABLES (DLC)										
2I2U				2	2	2	2	2		
2I2L				2	2	2	2	2		
2I3U				1	1	1	1	1		
2I3L				1	1	1	1	1		
2I4U					1	1	1	1		
2I4L				1	1	1	1	1		
4I6U	1	1	1	1	1	1	1	1		
4I6L	1	1	1	1	1	1	1	1		
4I8L	1	1	1	1	1	1	1	1		
5J1U					1	1	1	1		
6J3U						1-	1-	1-	1-	
6J3L						1-	1-	1-	1-	
6J4U						1-	1-	1-	1-	1-
6J4L						1-	1-	1-	1-	1-
TOTAL DETECTOR CABLES	3	3	3	10	12	12	12	12		
THERMAL VEHICLE DETECTION CABLE						1+	1+	1+		
CONDUIT SIZE (INCHES)	2	2½	2½	3	3	2-3"	2-3"	2-3"	2	2
NEW/EXISTING CONDUIT	E	E	E	E	E	E	E	E	E	E
% FILL	21	18	18	18	20	14	14	14	21	7

- REMOVE Exist CONDUCTOR(S)/CABLE(S).
+ ADD NEW CONDUCTOR(S)/CABLE(S).

FOR NOTES AND LEGEND, SEE SHEETS E-46 TO E-48

Dist	COUNTY	ROUTE	POST MILES TOTAL PROJECT	SHEET No.	TOTAL SHEETS
04	SCL	101,237	45.2/45.8, 2.7/3.3	465	736

6-13-18
REGISTERED CIVIL ENGINEER DATE

6-20-18
PLANS APPROVAL DATE

REGISTERED PROFESSIONAL ENGINEER
KIN Y. CHAN
No. 55391
Exp. 12/31/18
CIVIL
STATE OF CALIFORNIA

THE STATE OF CALIFORNIA OR ITS OFFICERS OR AGENTS SHALL NOT BE RESPONSIBLE FOR THE ACCURACY OR COMPLETENESS OF SCANNED COPIES OF THIS PLAN SHEET.

Y&C TRANSPORTATION CONSULTANTS, INC.
3250 Ramos Circle
Sacramento, CA 95827

VTA
3331 N First St
Building B
San Jose, CA 95134

REVISED BY | DATE REVISED
MENG YANG | DAN YAU
CALCULATED-DESIGNED BY | CHECKED BY
CONSULTANT FUNCTIONAL SUPERVISOR: TIMOTHY J. LEE

STATE OF CALIFORNIA - DEPARTMENT OF TRANSPORTATION
Caltrans

CITY STREET LOCATION 6 (PROPOSED)

APPROVED FOR ELECTRICAL WORK ONLY

TEMPORARY SIGNAL AND LIGHTING (CITY)
(STAGE 1 PHASE 1)

E-84

LAST REVISION 00-00-00 | DATE PLOTTED => $DATE | TIME PLOTTED => $TIME

NOTE:

FOR ACCURATE RIGHT OF WAY DATA, CONTACT RIGHT OF WAY ENGINEERING AT THE DISTRICT OFFICE.

Dist	COUNTY	ROUTE	POST MILES TOTAL PROJECT	SHEET No.	TOTAL SHEETS
04	SCL	101,237	45.2/45.8, 2.7/3.3	466	736

REGISTERED CIVIL ENGINEER 6-13-18 DATE

6-20-18 PLANS APPROVAL DATE

REGISTERED PROFESSIONAL ENGINEER KIN Y. CHAN No. 55391 Exp. 12/31/18 CIVIL STATE OF CALIFORNIA

THE STATE OF CALIFORNIA OR ITS OFFICERS OR AGENTS SHALL NOT BE RESPONSIBLE FOR THE ACCURACY OR COMPLETENESS OF SCANNED COPIES OF THIS PLAN SHEET.

Y&C TRANSPORTATION CONSULTANTS, INC.
3250 Ramos Circle
Sacramento, CA 95827

VTA
3331 N First St
Building B
San Jose, CA 95134

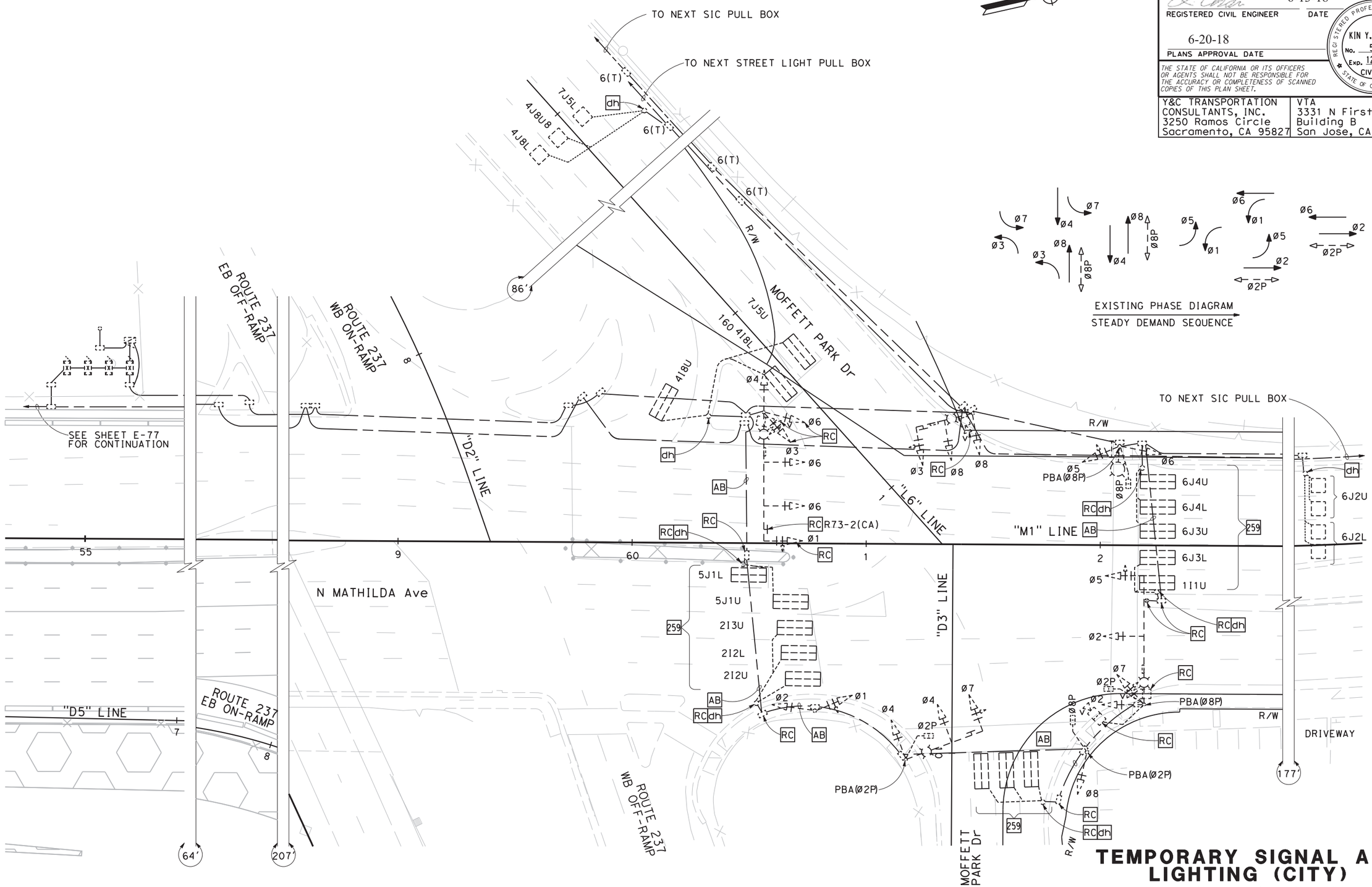

TEMPORARY SIGNAL AND LIGHTING (CITY)
(STAGE 1 PHASE 1)

SCALE: 1" = 20'

E-85

FOR NOTES AND LEGEND, SEE SHEETS E-46 TO E-48

CITY STREET LOCATION 7 (EXISTING)

APPROVED FOR ELECTRICAL WORK ONLY

STATE OF CALIFORNIA - DEPARTMENT OF TRANSPORTATION

Caltrans

CONSULTANT FUNCTIONAL SUPERVISOR: TIMOTHY J. LEE

CALCULATED-DESIGNED BY: MENG YANG

CHECKED BY: DAN YAU

REVISED BY

DATE REVISED

LAST REVISION 00-00-00

DATE PLOTTED => $DATE

TIME PLOTTED => $TIME

NOTES:

1. FOR ACCURATE RIGHT OF WAY DATA, CONTACT RIGHT OF WAY ENGINEERING AT THE DISTRICT OFFICE.
2. FOR SCHEDULES, SEE SHEET E-87.

Dist	COUNTY	ROUTE	POST MILES TOTAL PROJECT	SHEET No.	TOTAL SHEETS
04	SCL	101,237	45.2/45.8, 2.7/3.3	467	736

6-13-18
REGISTERED CIVIL ENGINEER — DATE

KIN Y. CHAN
No. 55391
Exp. 12/31/18
CIVIL
REGISTERED PROFESSIONAL ENGINEER
STATE OF CALIFORNIA

6-20-18
PLANS APPROVAL DATE

THE STATE OF CALIFORNIA OR ITS OFFICERS OR AGENTS SHALL NOT BE RESPONSIBLE FOR THE ACCURACY OR COMPLETENESS OF SCANNED COPIES OF THIS PLAN SHEET.

Y&C TRANSPORTATION CONSULTANTS, INC. 3250 Ramos Circle Sacramento, CA 95827	VTA 3331 N First St Building B San Jose, CA 95134

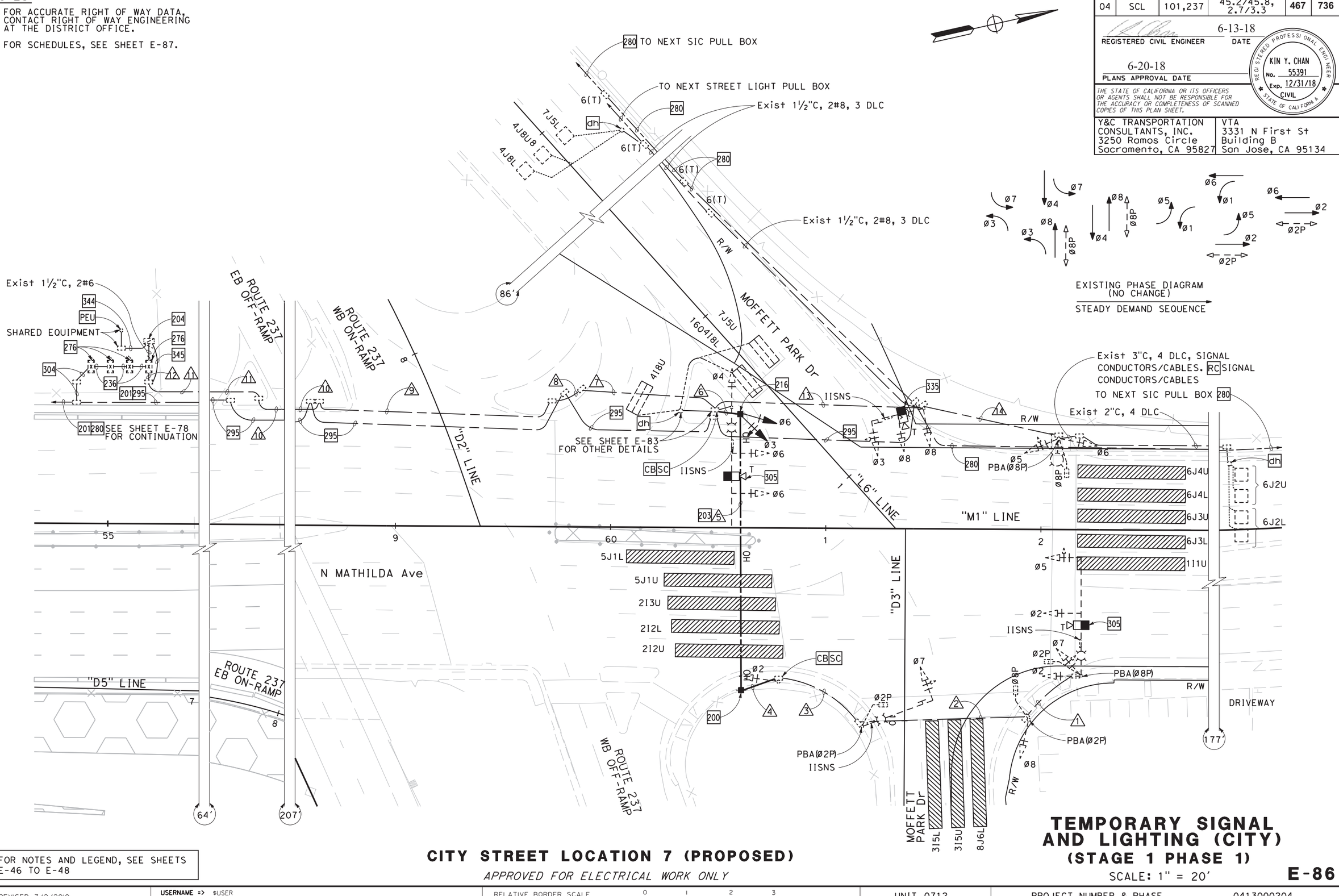

FOR NOTES AND LEGEND, SEE SHEETS E-46 TO E-48

CITY STREET LOCATION 7 (PROPOSED)

APPROVED FOR ELECTRICAL WORK ONLY

TEMPORARY SIGNAL AND LIGHTING (CITY)

(STAGE 1 PHASE 1)

SCALE: 1" = 20'

E-86

MENG YANG — DESIGNED BY
DAN YAU — CALCULATED BY
CHECKED BY
REVISED BY — DATE REVISED
CONSULTANT FUNCTIONAL SUPERVISOR: TIMOTHY J. LEE
STATE OF CALIFORNIA - DEPARTMENT OF TRANSPORTATION — Caltrans

LAST REVISION: 00-00-00 — DATE PLOTTED => $DATE — TIME PLOTTED => $TIME

BORDER LAST REVISED 7/2/2010 | USERNAME => $USER | DGN FILE => $REQUEST | RELATIVE BORDER SCALE IS IN INCHES 0 1 2 3 | UNIT 0712 | PROJECT NUMBER & PHASE 0413000204

SCHEDULES: (FOR SHEET E-86)

CONDUCTOR AND CONDUIT SCHEDULE

CONDUCTOR SCHEDULE	No. OF CONDUCTORS CONDUIT RUN NUMBER													
	/1	/2	/3	/4	/5	/6	/7	/8	/9	/10	/11	/12	/13	/14
No. 14 CONDUCTORS														
Ø1							3	3	3	3	3	3		
Ø2	3	3	3	3	3	3	3	3	3	3	3	3		
Ø3						3	3	3	3	3	3	3	3	
Ø4	3	3	3				3	3	3	3	3	3		
Ø5	3	3	3	3	3	3	6	6	6	6	6	6	3	3
Ø6						3	3	3	3	3	3	3	3	3
Ø7	3	3	3	3	3	3	3	3	3	3	3	3		
Ø8	3	3	3	3	3	3	6	6	6	6	6	6	3	
Ø2P	2	2	2	2	2	2	2	2	2	2	2	2		
Ø8P		2	2	2	2	2	4	4	4	4	4	4	2	2
PBA Ø2P		1	1	1	1	1	1	1	1	1	1	1		
PBA Ø8P	1	1	1	1	1	1	2	2	2	2	2	2	1	1
PBA COMMON	1	1	1	1	1	1	2	2	2	2	2	2	1	1
SPARES	3	3	3	3	3	3	6	6	6	6	6	6	3	3
TOTAL No. 14	19	22	22	22	22	22	41	41	41	41	41	41	19	13
No. 8 CONDUCTORS														
IISNS	2	2	2	2	2	2	2	2	2	2	2	2	2	
LIGHTING	2	2	2	2	2	2	2	2	2	2	2	2	2	2
SIGNAL NEUTRAL	1	1	1	1	1	1	2	2	2	2	2	2	1	1
TOTAL No. 8	5	5	5	5	5	5	6	6	6	6	6	6	5	3
DETECTOR CABLES (DLC)														
1I1U							1⁻	1⁻	1⁻	1⁻	1⁻	1⁻	1⁻	1⁻
2I2U							1⁻	1⁻	1⁻	1⁻	1⁻	1⁻		
2I2L							1⁻	1⁻	1⁻	1⁻	1⁻	1⁻		
2I3U							1⁻	1⁻	1⁻	1⁻	1⁻	1⁻		
3I5U	1⁻	1⁻	1⁻	1⁻	1⁻	1⁻	1⁻	1⁻	1⁻	1⁻	1⁻	1⁻		
3I5L	1⁻	1⁻	1⁻	1⁻	1⁻	1⁻	1⁻	1⁻	1⁻	1⁻	1⁻	1⁻		
4J8U							1	1	1	1	1	1	1	
4J8L							1	1	1	1	1	1	1	
4I8U							1	1	1	1	1	1		
4I8L							1	1	1	1	1	1		
5J1U							1⁻	1⁻	1⁻	1⁻	1⁻	1⁻		
5J1L							1⁻	1⁻	1⁻	1⁻	1⁻	1⁻		
6J2U							2	2	2	2	2	2	2	2
6J2L							2	2	2	2	2	2	2	2
6J3U							1⁻	1⁻	1⁻	1⁻	1⁻	1⁻	1⁻	1⁻
6J3L							1⁻	1⁻	1⁻	1⁻	1⁻	1⁻	1⁻	1⁻
6J4U							1⁻	1⁻	1⁻	1⁻	1⁻	1⁻	1⁻	1⁻
6J4L							1⁻	1⁻	1⁻	1⁻	1⁻	1⁻	1⁻	1⁻
7J5U							1	1	1	1	1	1		
7J5L							1	1	1	1	1	1	1	
8J6L		1⁻	1⁻	1⁻	1⁻	1⁻	1⁻	1⁻	1⁻	1⁻	1⁻	1⁻		
TOTAL DETECTOR CABLES							10	10	10	10	10	10	7	4
THERMAL VEHICLE DETECTION CABLE (RG6)	1⁺	1⁺	1⁺	1	1	1	3⁺	3⁺	3⁺	3⁺	3⁺	3⁺	1⁺	
CONDUIT SIZE (INCHES)	2	2½	2½	3	OH	3	2-3"	2-3"	2-3"	2-3"	2-3"	2-3"	3	3
NEW/EXISTING CONDUIT	E	E	E	N	N	N	E	E	E	E	E	E	E	E
% FILL	29	21	21	14		14	18	19	19	19	19	19	18	10

- REMOVE Exist CONDUCTOR(S)/CABLE(S).
+ ADD NEW CONDUCTOR(S)/CABLE(S).

FOR NOTES AND LEGEND, SEE SHEETS E-46 TO E-48

Dist	COUNTY	ROUTE	POST MILES TOTAL PROJECT	SHEET No.	TOTAL SHEETS
04	SCL	101,237	45.2/45.8, 2.7/3.3	468	736

6-13-18
REGISTERED CIVIL ENGINEER — DATE

REGISTERED PROFESSIONAL ENGINEER
KIN Y. CHAN
No. 55391
Exp. 12/31/18
CIVIL
STATE OF CALIFORNIA

6-20-18
PLANS APPROVAL DATE

THE STATE OF CALIFORNIA OR ITS OFFICERS OR AGENTS SHALL NOT BE RESPONSIBLE FOR THE ACCURACY OR COMPLETENESS OF SCANNED COPIES OF THIS PLAN SHEET.

Y&C TRANSPORTATION CONSULTANTS, INC.
3250 Ramos Circle
Sacramento, CA 95827

VTA
3331 N First St
Building B
San Jose, CA 95134

REVISED BY: MENG YANG
DATE REVISED: DAN YAU
CALCULATED-DESIGNED BY:
CHECKED BY:
CONSULTANT FUNCTIONAL SUPERVISOR: TIMOTHY J. LEE
STATE OF CALIFORNIA - DEPARTMENT OF TRANSPORTATION

TEMPORARY SIGNAL AND LIGHTING (CITY)
(STAGE 1 PHASE 1)

CITY STREET LOCATION 7 (PROPOSED)

APPROVED FOR ELECTRICAL WORK ONLY

E-87

LAST REVISION 00-00-00 | DATE PLOTTED => $DATE | TIME PLOTTED => $TIME

BORDER LAST REVISED 7/2/2010 | USERNAME => $USER | DGN FILE => $REQUEST | RELATIVE BORDER SCALE IS IN INCHES 0 1 2 3 | UNIT 0712 | PROJECT NUMBER & PHASE 0413000204

NOTE:

FOR ACCURATE RIGHT OF WAY DATA, CONTACT
RIGHT OF WAY ENGINEERING AT THE DISTRICT OFFICE.

Dist	COUNTY	ROUTE	POST MILES TOTAL PROJECT	SHEET No.	TOTAL SHEETS
04	SCL	101,237	45.2/45.8, 2.7/3.3	469	736

6-13-18
REGISTERED CIVIL ENGINEER DATE

REGISTERED PROFESSIONAL ENGINEER
KIN Y. CHAN
No. 55391
Exp. 12/31/18
CIVIL
STATE OF CALIFORNIA

6-20-18
PLANS APPROVAL DATE

THE STATE OF CALIFORNIA OR ITS OFFICERS OR AGENTS SHALL NOT BE RESPONSIBLE FOR THE ACCURACY OR COMPLETENESS OF SCANNED COPIES OF THIS PLAN SHEET.

Y&C TRANSPORTATION CONSULTANTS, INC.
3250 Ramos Circle
Sacramento, CA 95827

VTA
3331 N First St
Building B
San Jose, CA 95134

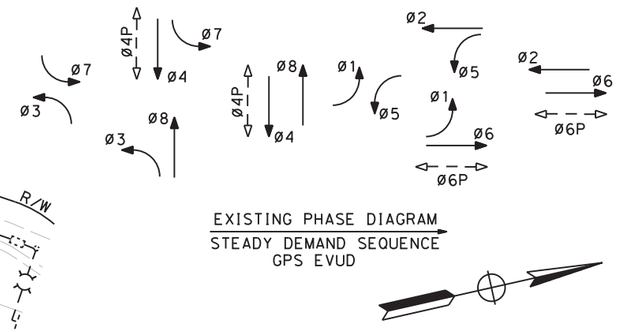

EXISTING PHASE DIAGRAM
STEADY DEMAND SEQUENCE
GPS EVUD

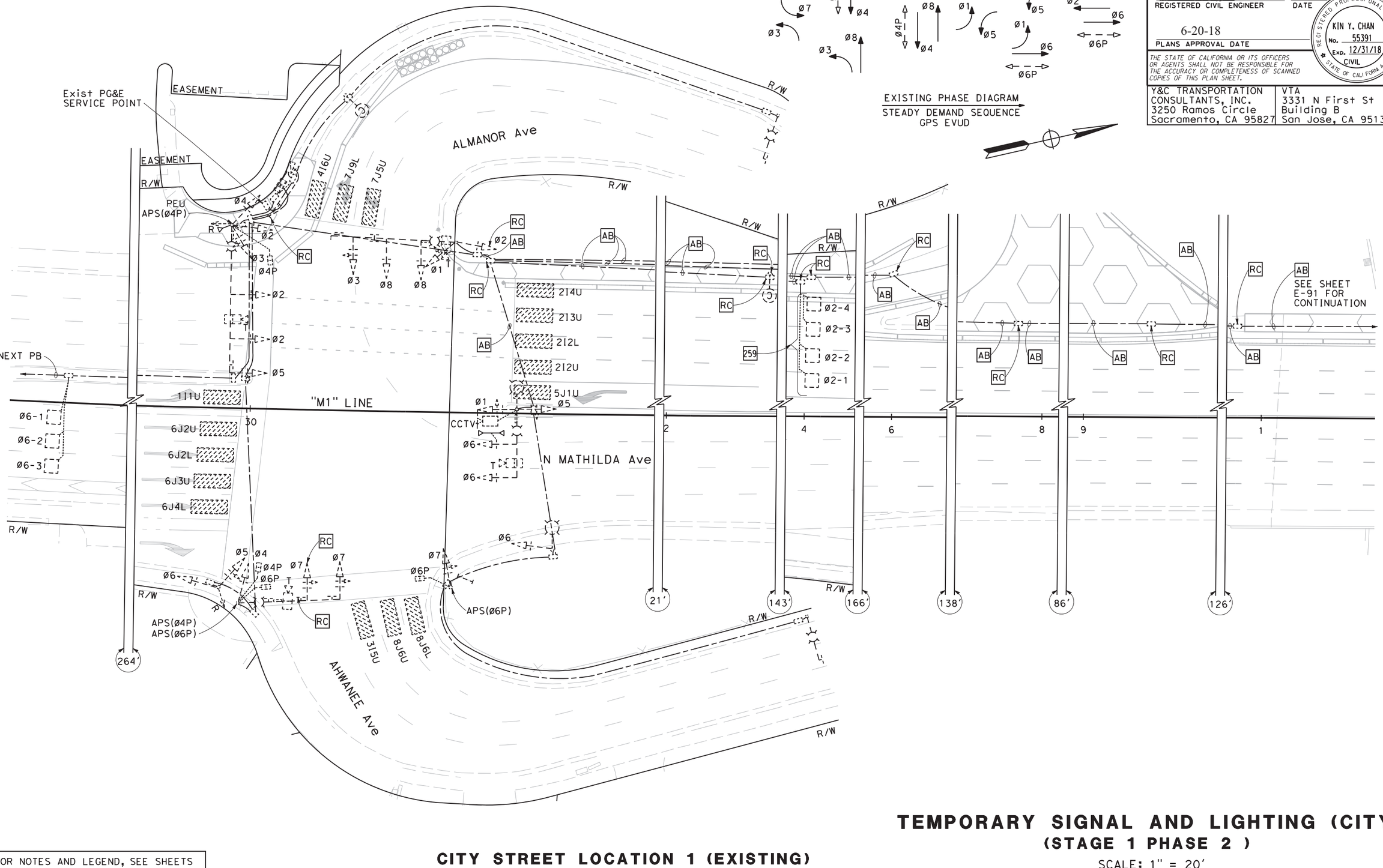

FOR NOTES AND LEGEND, SEE SHEETS E-46 TO E-48

CITY STREET LOCATION 1 (EXISTING)

APPROVED FOR ELECTRICAL WORK ONLY

TEMPORARY SIGNAL AND LIGHTING (CITY)

(STAGE 1 PHASE 2)

SCALE: 1" = 20'

E-88

STATE OF CALIFORNIA - DEPARTMENT OF TRANSPORTATION
Caltrans

CONSULTANT FUNCTIONAL SUPERVISOR: TIMOTHY J. LEE
CALCULATED-DESIGNED BY: MENG YANG
CHECKED BY: DAN YAU
REVISED BY / DATE REVISED

LAST REVISION 00-00-00
DATE PLOTTED => $DATE
TIME PLOTTED => $TIME

BORDER LAST REVISED 7/2/2010
USERNAME => $USER
DGN FILE => $REQUEST
RELATIVE BORDER SCALE IS IN INCHES 0 1 2 3
UNIT 0712
PROJECT NUMBER & PHASE 0413000204

NOTES:

1. FOR ACCURATE RIGHT OF WAY DATA, CONTACT RIGHT OF WAY ENGINEERING AT THE DISTRICT OFFICE.
2. FOR SCHEDULE, SEE SHEET E-90.
3. FOR SIC ARRANGEMENT IN STAGE 1 PHASE 3, REFER TO STAGE 1 PHASE 3 OF LOCATION 2 ON SHEET E-103.

Dist	COUNTY	ROUTE	POST MILES TOTAL PROJECT	SHEET No.	TOTAL SHEETS
04	SCL	101,237	45.2/45.8, 2.7/3.3	470	736

6-13-18
REGISTERED CIVIL ENGINEER — DATE

6-20-18
PLANS APPROVAL DATE

REGISTERED PROFESSIONAL ENGINEER — KIN Y. CHAN — No. 55391 — Exp. 12/31/18 — CIVIL — STATE OF CALIFORNIA

THE STATE OF CALIFORNIA OR ITS OFFICERS OR AGENTS SHALL NOT BE RESPONSIBLE FOR THE ACCURACY OR COMPLETENESS OF SCANNED COPIES OF THIS PLAN SHEET.

Y&C TRANSPORTATION CONSULTANTS, INC.
3250 Ramos Circle
Sacramento, CA 95827

VTA
3331 N First St
Building B
San Jose, CA 95134

EXISTING PHASE DIAGRAM
(NO CHANGE)

STEADY DEMAND SEQUENCE
GPS EVUD

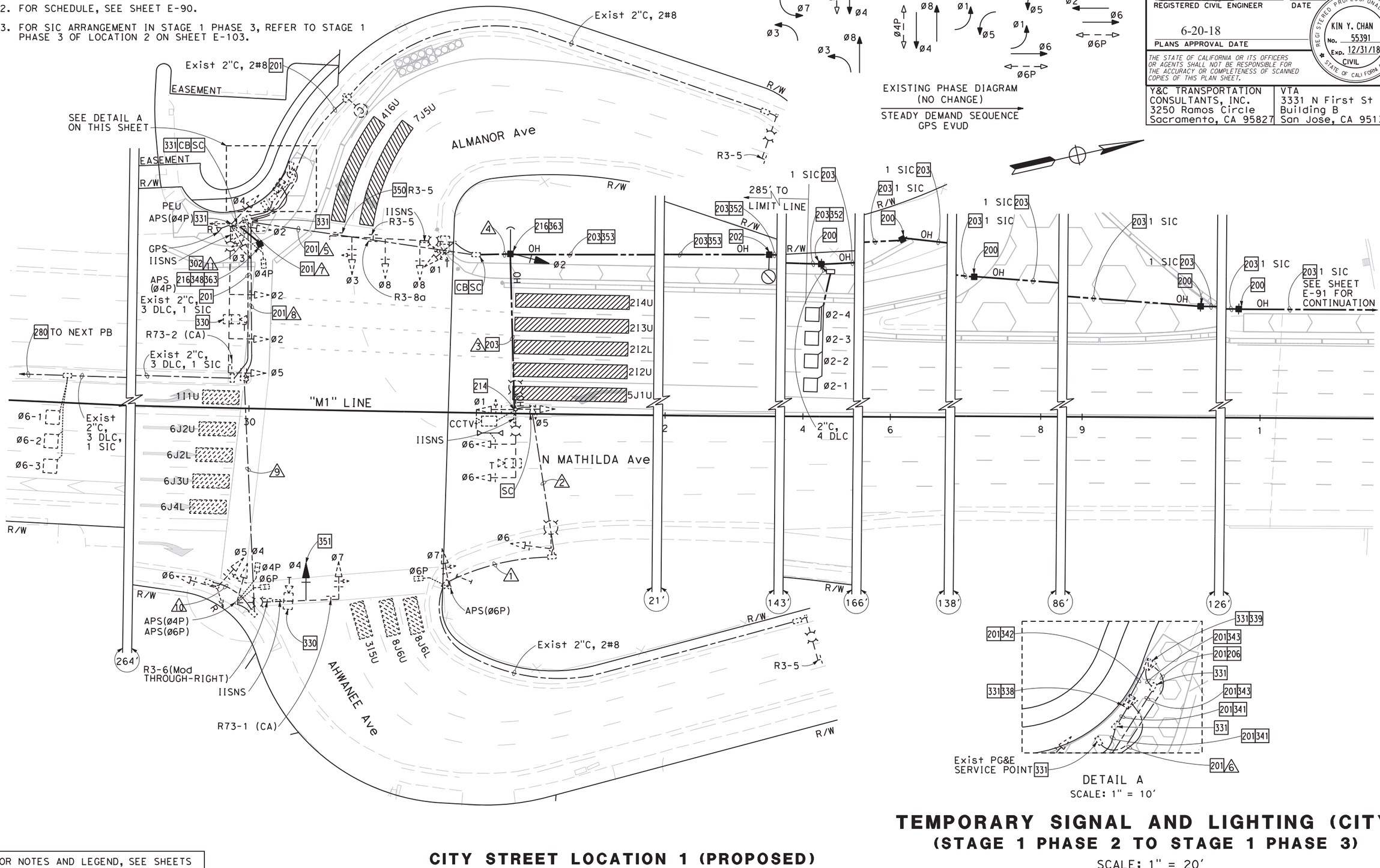

DETAIL A
SCALE: 1" = 10'

FOR NOTES AND LEGEND, SEE SHEETS E-46 TO E-48

CITY STREET LOCATION 1 (PROPOSED)

APPROVED FOR ELECTRICAL WORK ONLY

TEMPORARY SIGNAL AND LIGHTING (CITY)
(STAGE 1 PHASE 2 TO STAGE 1 PHASE 3)

SCALE: 1" = 20'

E-89

STATE OF CALIFORNIA - DEPARTMENT OF TRANSPORTATION
CONSULTANT FUNCTIONAL SUPERVISOR: TIMOTHY J. LEE
CALCULATED-DESIGNED BY: MENG YANG
CHECKED BY: DAN YAU
REVISED BY
DATE REVISED
LAST REVISION 00-00-00
DATE PLOTTED => $DATE
TIME PLOTTED => $TIME

BORDER LAST REVISED 7/2/2010
USERNAME => $USER
DGN FILE => $REQUEST
RELATIVE BORDER SCALE IS IN INCHES 0 1 2 3
UNIT 0712
PROJECT NUMBER & PHASE 0413000204

Dist	COUNTY	ROUTE	POST MILES TOTAL PROJECT	SHEET No.	TOTAL SHEETS
04	SCL	101,237	45.2/45.8, 2.7/3.3	471	736

6-13-18
REGISTERED CIVIL ENGINEER DATE

REGISTERED PROFESSIONAL ENGINEER
KIN Y. CHAN
No. 55391
Exp. 12/31/18
CIVIL
STATE OF CALIFORNIA

6-20-18
PLANS APPROVAL DATE

THE STATE OF CALIFORNIA OR ITS OFFICERS OR AGENTS SHALL NOT BE RESPONSIBLE FOR THE ACCURACY OR COMPLETENESS OF SCANNED COPIES OF THIS PLAN SHEET.

Y&C TRANSPORTATION CONSULTANTS, INC. 3250 Ramos Circle Sacramento, CA 95827	VTA 3331 N First St Building B San Jose, CA 95134

SCHEDULE: (FOR SHEET E-89)

CONDUCTOR AND CONDUIT SCHEDULE

CONDUCTOR SCHEDULE	No. OF CONDUCTORS in CONDUIT RUN NUMBER 1	2	3	4	5	6	7	8	9	10	11
No. 14 CONDUCTORS											
Ø1			3	3	3	3					
Ø2				3	3	6	3				
Ø3					3	6	3				
Ø4						3	3	3	3		
Ø5			3	3	3	6	3	3	3	3	
Ø6		3	3	3	3	6		3	3	3	
Ø7	3	3	3	3	3	6		3	3		
Ø8					3	3					
Ø4P						2	2	2	2		
Ø6P	2	2	2	2	2	4		2	2		
IISNS			2	2	2		2	2	2		
PEU							3				
SPARES	3	3	3	3	3	6	3	3	3	3	
TOTAL No. 14	8	11	19	22	28	51	22	21	21	9	
No. 12 CONDUCTORS											
APS Ø4P						2	2	2	2		2
APS Ø6P	2	2	2	2	2	4		2	2		
TOTAL No. 12	2	2	2	2	2	6	2	4	4		2
No. 8 CONDUCTORS											
LIGHTING		2	2	2	2		2	2	2		
SIGNAL NEUTRAL	1	1	1	1	1	1	1	1	1	1	
TOTAL No. 8	1	3	3	3	3	1	3	3	3	1	
DETECTOR CABLES (DLC)											
Ø2				4	4*	4*					
Ø6						3					
TOTAL DETECTOR CABLES				4	4	7					
THERMAL VEHICLE DETECTION CABLE			1	1	1* 3*	1* 3*	1	1	1		
CCTV CABLE			1	1	1*	1*					
GPS EVUC						1	1				
SIC				1	1*						
CONDUIT SIZE (INCHES)	2	2	OH	3	2-2"	2-3"	2	2	2	2	2
NEW/EXISTING CONDUIT	E	E	N	N	E	E	E	E	E	E	N
% FILL	12	14		21	35	25	32	29	29	7	

* REMOVE Exist CONDUCTOR(S)/CABLE(S). ADD NEW CONDUCTOR(S)/CABLE(S).

FOR NOTES AND LEGEND, SEE SHEETS E-46 TO E-48

CITY STREET LOCATION 1 (PROPOSED)

TEMPORARY SIGNAL AND LIGHTING (CITY)
(STAGE 1 PHASE 2 TO STAGE 1 PHASE 3)

E-90

REVISED BY | DATE REVISED
MENG YANG | DAN YAU
CALCULATED-DESIGNED BY | CHECKED BY
CONSULTANT FUNCTIONAL SUPERVISOR: TIMOTHY J. LEE
STATE OF CALIFORNIA - DEPARTMENT OF TRANSPORTATION
Caltrans

LAST REVISION 00-00-00 | DATE PLOTTED => $DATE | TIME PLOTTED => $TIME

BORDER LAST REVISED 7/2/2010 | USERNAME => $USER | DGN FILE => $REQUEST | RELATIVE BORDER SCALE IS IN INCHES 0 1 2 3 | UNIT 0712 | PROJECT NUMBER & PHASE 0413000204

NOTES:

1. FOR ACCURATE RIGHT OF WAY DATA, CONTACT RIGHT OF WAY ENGINEERING AT THE DISTRICT OFFICE.
2. FOR SCHEDULE, SEE SHEET E-92.

EXISTING PHASE DIAGRAM
(NO CHANGE)
STEADY DEMAND SEQUENCE
GPS EVUD

Dist	COUNTY	ROUTE	POST MILES TOTAL PROJECT	SHEET No.	TOTAL SHEETS
04	SCL	101,237	45.2/45.8, 2.7/3.3	472	736

6-13-18
REGISTERED CIVIL ENGINEER DATE

REGISTERED PROFESSIONAL ENGINEER
KIN Y. CHAN
No. 55391
Exp. 12/31/18
CIVIL
STATE OF CALIFORNIA

6-20-18
PLANS APPROVAL DATE

THE STATE OF CALIFORNIA OR ITS OFFICERS OR AGENTS SHALL NOT BE RESPONSIBLE FOR THE ACCURACY OR COMPLETENESS OF SCANNED COPIES OF THIS PLAN SHEET.

Y&C TRANSPORTATION CONSULTANTS, INC. 3250 Ramos Circle Sacramento, CA 95827	VTA 3331 N First St Building B San Jose, CA 95134

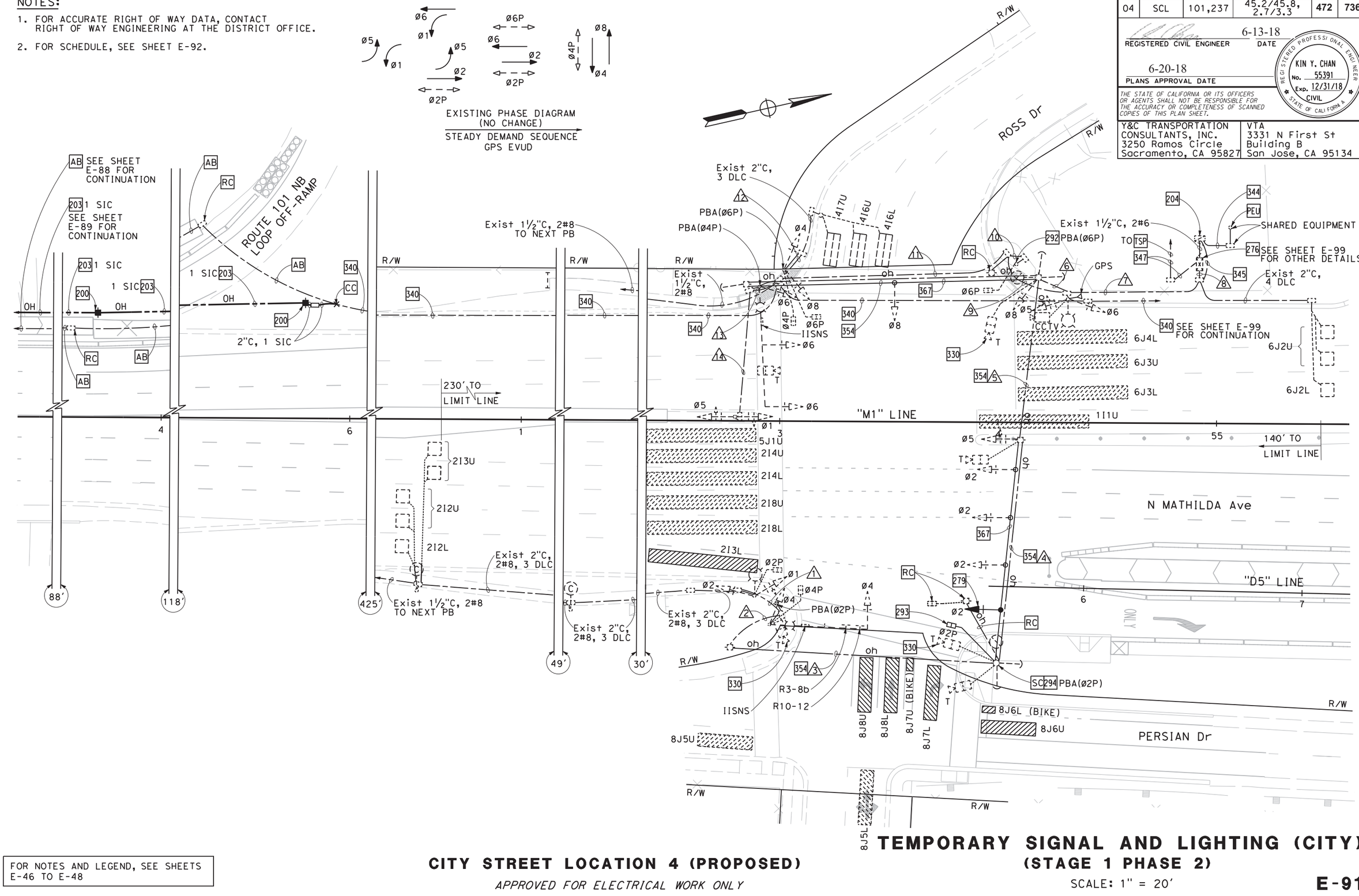

FOR NOTES AND LEGEND, SEE SHEETS E-46 TO E-48

CITY STREET LOCATION 4 (PROPOSED)

APPROVED FOR ELECTRICAL WORK ONLY

TEMPORARY SIGNAL AND LIGHTING (CITY)

(STAGE 1 PHASE 2)

SCALE: 1" = 20'

E-91

STATE OF CALIFORNIA - DEPARTMENT OF TRANSPORTATION
Caltrans

CONSULTANT FUNCTIONAL SUPERVISOR: TIMOTHY J. LEE
CALCULATED-DESIGNED BY: MENG YANG
CHECKED BY: DAN YAU
REVISED BY
DATE REVISED

LAST REVISION 00-00-00
DATE PLOTTED => $DATE
TIME PLOTTED => $TIME

BORDER LAST REVISED 7/2/2010
USERNAME => $USER
DGN FILE => $REQUEST
RELATIVE BORDER SCALE IS IN INCHES 0 1 2 3
UNIT 0712
PROJECT NUMBER & PHASE 0413000204

SCHEDULE: (FOR SHEET E-91)

CONDUCTOR AND CONDUIT SCHEDULE

CONDUCTOR SCHEDULE	No. OF CONDUCTORS CONDUIT RUN NUMBER													
	1	2	3	4	5	6	7	8	9	10	11	12	13	14
No. 14 CONDUCTORS														
Ø1	3	3	3	3	3	3	6	6	3		3		3	3
Ø2	3	3	3	3	3	3	3	3						
Ø4		3	3	3	3	3	6	6	3		3	3		
Ø5					3	3	6	6	3		3		3	3
Ø6							3	3	3		3		3	
Ø8						3	6	6	3		3	3		
Ø2P	2	2	2	2	2	2	2	2						
Ø4P		2	2	2	2	2	4	4	2		2	2		
Ø6P							2	2	2	2	2	2		
PBA Ø2P		1	1	1	1	1	1	1						
PBA Ø4P	1	1	1	1	1	1	2	2	1		1		1	
PBA Ø6P							2	2	1	1	1	1		
PBA COMMON	1	1	1	1	1	1	2	2	1	1	1	1	1	
SPARES	3	3	3	3	3	3	6	6	3	3	3	3	3	3
TOTAL No. 14	13	19	19	19	22	25	51	51	25	7	25	15	14	9
No. 8 CONDUCTORS														
LIGHTING & IISNS	2	2	2	2	2	2	4		2		2		2	
SIGNAL NEUTRAL	1	1	1	1	1	1	2	2	1	1	1	1	1	1
TOTAL No. 8	3	3	3	3	3	3	6	2	3	1	3	1	3	1
DETECTOR CABLES (DLC)														
212U	1	1	1	1	1	1	1	1						
212L	1	1	1	1	1	1	1	1						
213U	1	1	1	1	1	1	1	1						
416U							1	1	1		1	1		
416L							1	1	1		1	1		
417U							1	1	1		1	1		
6J2U								1						
6J2L								1						
TOTAL DETECTOR CABLES	3	3	3	3	3	3	6	8	3		3	3		
THERMAL VEHICLE DETECTION CABLE		1	1	3	4	5	6	6	1		1	1	1	
CCTV CABLE								1						
GPS EVUC							1	1						
CONDUIT SIZE (INCHES)	3	OH	OH	OH	OH	4	2-3"	2-3"	3	3	3	3	2	2
NEW/EXISTING CONDUIT	E	E	E	E	E	E	E	E	E	E	E	E	E	E
% FILL	9					18	25	25	22	3	16	8	22	7

FOR NOTES AND LEGEND, SEE SHEETS E-46 TO E-48

CITY STREET LOCATION 4 (PROPOSED)

Dist	COUNTY	ROUTE	POST MILES TOTAL PROJECT	SHEET No.	TOTAL SHEETS
04	SCL	101,237	45.2/45.8, 2.7/3.3	473	736

6-13-18
REGISTERED CIVIL ENGINEER — DATE

REGISTERED PROFESSIONAL ENGINEER
KIN Y. CHAN
No. 55391
Exp. 12/31/18
CIVIL
STATE OF CALIFORNIA

6-20-18
PLANS APPROVAL DATE

THE STATE OF CALIFORNIA OR ITS OFFICERS OR AGENTS SHALL NOT BE RESPONSIBLE FOR THE ACCURACY OR COMPLETENESS OF SCANNED COPIES OF THIS PLAN SHEET.

Y&C TRANSPORTATION CONSULTANTS, INC.
3250 Ramos Circle
Sacramento, CA 95827

VTA
3331 N First St
Building B
San Jose, CA 95134

REVISED BY | DATE REVISED
MENG YANG | DAN YAU
CALCULATED-DESIGNED BY | CHECKED BY
CONSULTANT FUNCTIONAL SUPERVISOR: TIMOTHY J. LEE
STATE OF CALIFORNIA - DEPARTMENT OF TRANSPORTATION

TEMPORARY SIGNAL AND LIGHTING (CITY)
(STAGE 1 PHASE 2)

E-92

LAST REVISION 00-00-00 | DATE PLOTTED => $DATE | TIME PLOTTED => $TIME

BORDER LAST REVISED 7/2/2010 | USERNAME => $USER | DGN FILE => $REQUEST | RELATIVE BORDER SCALE IS IN INCHES 0 1 2 3 | UNIT 0712 | PROJECT NUMBER & PHASE 0413000204

NOTES:

FOR ACCURATE RIGHT OF WAY DATA, CONTACT RIGHT OF WAY ENGINEERING AT THE DISTRICT OFFICE.

Dist	COUNTY	ROUTE	POST MILES TOTAL PROJECT	SHEET No.	TOTAL SHEETS
04	SCL	101,237	45.2/45.8, 2.7/3.3	474	736

6-13-18
REGISTERED CIVIL ENGINEER — DATE

6-20-18
PLANS APPROVAL DATE

REGISTERED PROFESSIONAL ENGINEER
KIN Y. CHAN
No. 55391
Exp. 12/31/18
CIVIL
STATE OF CALIFORNIA

THE STATE OF CALIFORNIA OR ITS OFFICERS OR AGENTS SHALL NOT BE RESPONSIBLE FOR THE ACCURACY OR COMPLETENESS OF SCANNED COPIES OF THIS PLAN SHEET.

Y&C TRANSPORTATION CONSULTANTS, INC.
3250 Ramos Circle
Sacramento, CA 95827

VTA
3331 N First St
Building B
San Jose, CA 95134

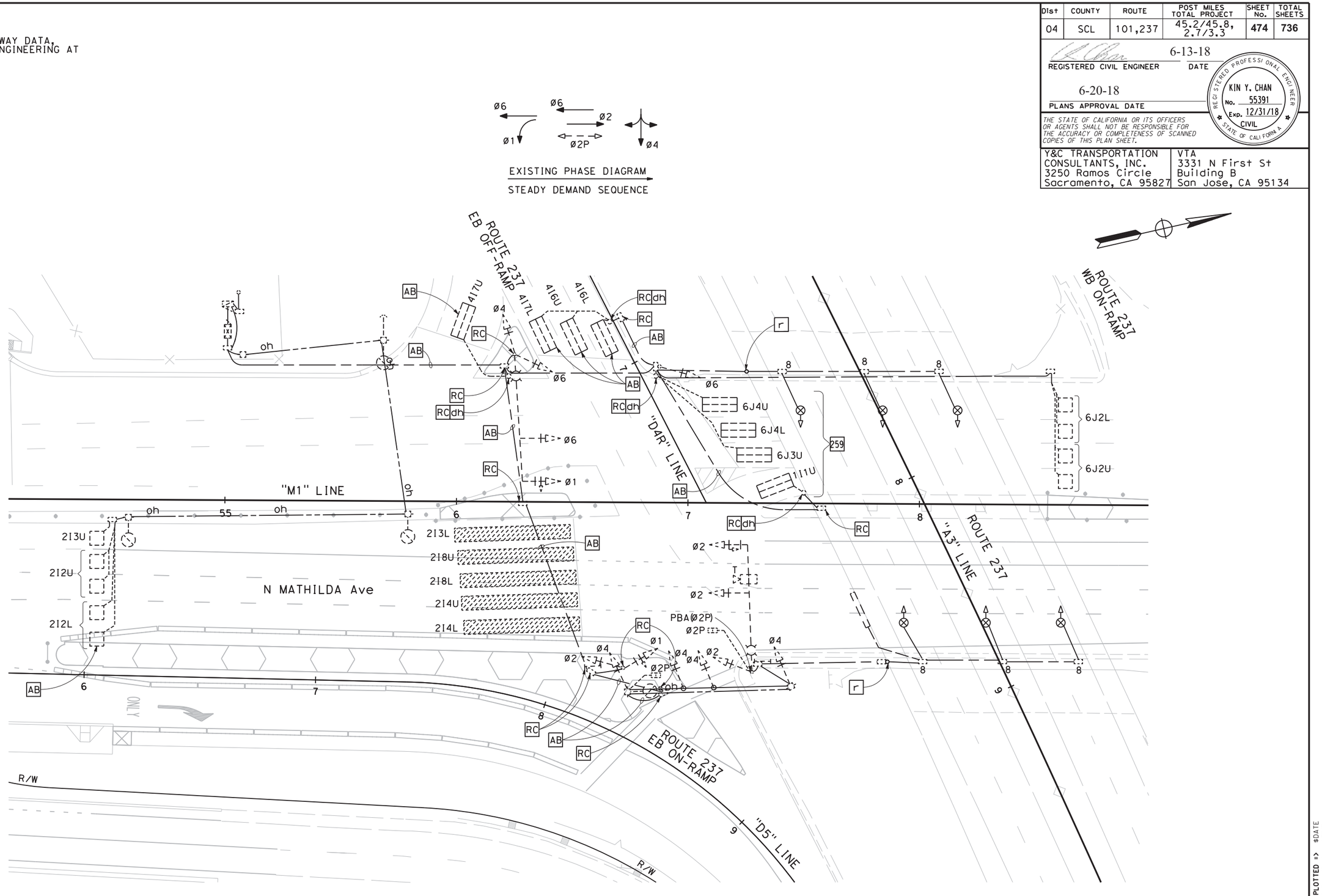

FOR NOTES AND LEGEND, SEE SHEETS E-46 TO E-48

CITY STREET LOCATION 5 (EXISTING)

APPROVED FOR ELECTRICAL WORK ONLY

TEMPORARY SIGNAL AND LIGHTING (CITY)

(STAGE 1 PHASE 2)

SCALE: 1" = 20'

E-93

CALCULATED-DESIGNED BY	MENG YANG	REVISED BY
CHECKED BY	DAN YAU	DATE REVISED

CONSULTANT FUNCTIONAL SUPERVISOR: TIMOTHY J. LEE

STATE OF CALIFORNIA - DEPARTMENT OF TRANSPORTATION — Caltrans

LAST REVISION 00-00-00 | DATE PLOTTED => $DATE | TIME PLOTTED => $TIME

BORDER LAST REVISED 7/2/2010 | USERNAME => $USER | DGN FILE => $REQUEST | RELATIVE BORDER SCALE IS IN INCHES 0 1 2 3 | UNIT 0712 | PROJECT NUMBER & PHASE 0413000204

NOTES:

1. FOR ACCURATE RIGHT OF WAY DATA, CONTACT RIGHT OF WAY ENGINEERING AT THE DISTRICT OFFICE.
2. FOR SCHEDULES, SEE SHEET E-95.

Dist	COUNTY	ROUTE	POST MILES TOTAL PROJECT	SHEET No.	TOTAL SHEETS
04	SCL	101,237	45.2/45.8, 2.7/3.3	475	736

6-13-18
REGISTERED CIVIL ENGINEER — DATE

KIN Y. CHAN
No. 55391
Exp. 12/31/18
CIVIL
REGISTERED PROFESSIONAL ENGINEER
STATE OF CALIFORNIA

6-20-18
PLANS APPROVAL DATE

THE STATE OF CALIFORNIA OR ITS OFFICERS OR AGENTS SHALL NOT BE RESPONSIBLE FOR THE ACCURACY OR COMPLETENESS OF SCANNED COPIES OF THIS PLAN SHEET.

Y&C TRANSPORTATION CONSULTANTS, INC.
3250 Ramos Circle
Sacramento, CA 95827

VTA
3331 N First St
Building B
San Jose, CA 95134

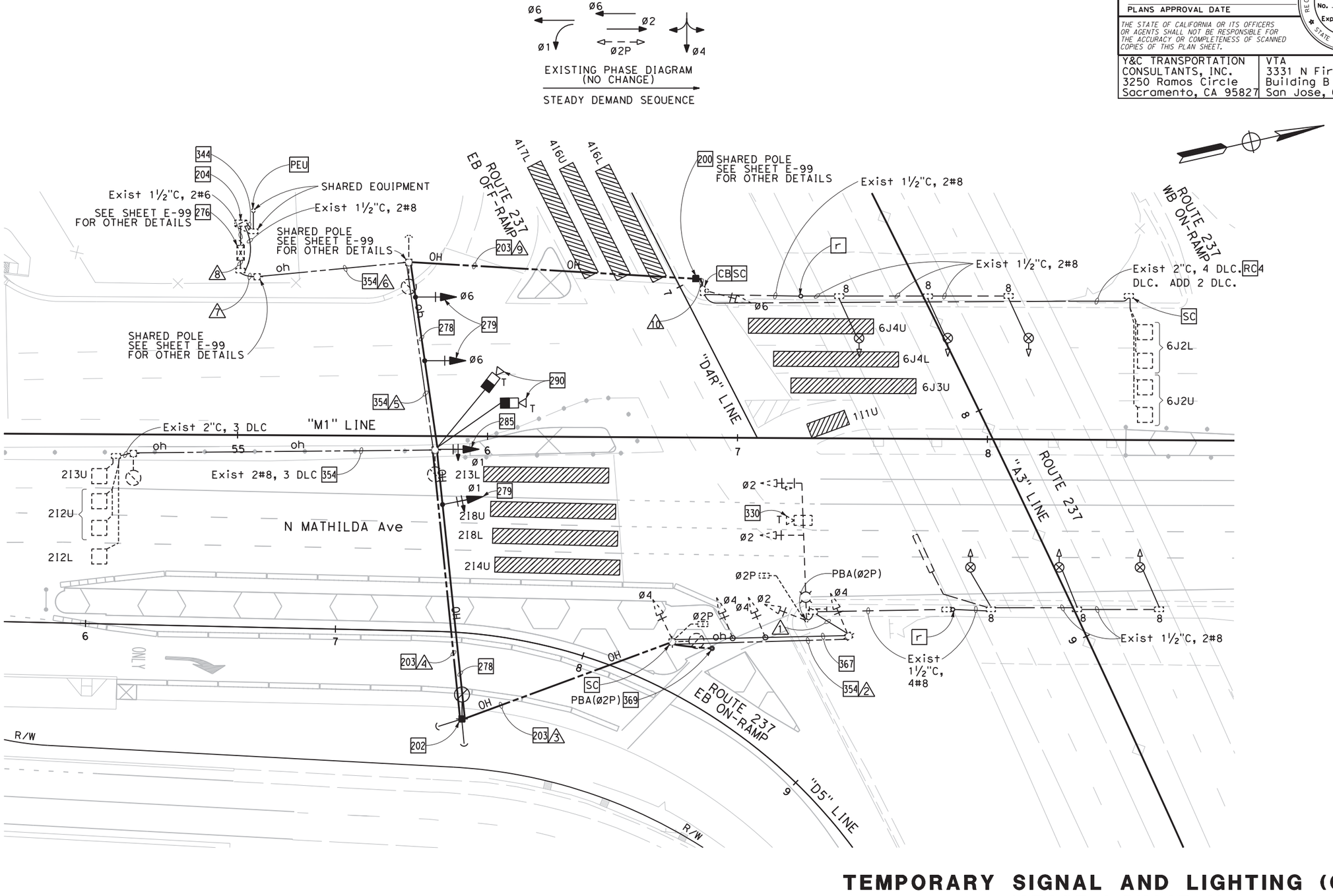

FOR NOTES AND LEGEND, SEE SHEETS E-46 TO E-48

CITY STREET LOCATION 5 (PROPOSED)

APPROVED FOR ELECTRICAL WORK ONLY

TEMPORARY SIGNAL AND LIGHTING (CITY)

(STAGE 1 PHASE 2)

SCALE: 1" = 20'

E-94

STATE OF CALIFORNIA - DEPARTMENT OF TRANSPORTATION
CONSULTANT FUNCTIONAL SUPERVISOR: TIMOTHY J. LEE
CALCULATED-DESIGNED BY: MENG YANG
CHECKED BY: DAN YAU
REVISED BY
DATE REVISED

LAST REVISION 00-00-00
DATE PLOTTED => $DATE
TIME PLOTTED => $TIME

BORDER LAST REVISED 7/2/2010
USERNAME => $USER
DGN FILE => $REQUEST
RELATIVE BORDER SCALE IS IN INCHES 0 1 2 3
UNIT 0712
PROJECT NUMBER & PHASE 0413000204

SCHEDULES: (FOR SHEET E-94)

CONDUCTOR AND CONDUIT SCHEDULE

CONDUCTOR SCHEDULE	No. OF CONDUCTORS CONDUIT RUN NUMBER 1	2	3	4	5	6	7	8	9	10
No. 14 CONDUCTORS										
Ø1				3	3	3+	3+	3		
Ø2	3	3	3	3	3	3+	3+	3		
Ø4		3	3	3	3	3+	3+	3		
Ø6						3+	3+	3	3	3
Ø2P	2-	2-						2-		
PBA Ø2P	1-	1-						1-		
PBA COMMON	1-	1-						1-		
SPARES	3	3	3	3	3	6+	6+	6	3	3
TOTAL No. 14	6	9	9	12	12	18	18	18	6	6
No. 8 CONDUCTORS										
LIGHTING	2	2	2	2	2	2	2	2	2	2
SIGN ILLUMINATION	2	2	2	2	2	2+	2+	2		
SIGNAL NEUTRAL	1	1	1	1	1	1+	1+	1	1	1
TOTAL No. 8	5	5	5	5	5	5	5	5	3	3
DETECTOR CABLES (DLC)										
1I1U										
2I2U						1-/1+	1-/1+	1-/1+	1-/1+	
2I2L						1-/1+	1-/1+	1-/1+	1-/1+	
2I3U						1-/1+	1-/1+	1-/1+	1-/1+	
2I3L										
2I4U										
2I4L										
2I8U										
2I8L										
4I6U										
4I6L										
4I7U										
4I7L										
6J2U						2-/1+	2-/1+	2-/1+	1	1
6J2L						2-/1+	2-/1+	2-/1+	1	1
6J3U										
6J3L										
6J4U										
6J4L										
TOTAL DETECTOR CABLES					3	5	5	5	2	2
THERMAL VEHICLE DETECTION CABLE	1-/1+	1-/1+	1	1	3	1-/3+	1-/3+	1-/3+		
CONDUIT SIZE (INCHES)	3	OH	OH	OH	OH	OH	4	2-1/2	OH	3
NEW/EXISTING CONDUIT	E	E	N	N	N	E	E	E	N	N
% FILL	9						14	15		6

- REMOVE Exist CONDUCTOR(S)/CABLE(S).
+ ADD NEW CONDUCTOR(S)/CABLE(S).

FOR NOTES AND LEGEND, SEE SHEETS E-46 TO E-48

Dist	COUNTY	ROUTE	POST MILES TOTAL PROJECT	SHEET No.	TOTAL SHEETS
04	SCL	101,237	45.2/45.8, 2.7/3.3	476	736

6-13-18
REGISTERED CIVIL ENGINEER — DATE

KIN Y. CHAN
No. 55391
Exp. 12/31/18
CIVIL
REGISTERED PROFESSIONAL ENGINEER
STATE OF CALIFORNIA

6-20-18
PLANS APPROVAL DATE

THE STATE OF CALIFORNIA OR ITS OFFICERS OR AGENTS SHALL NOT BE RESPONSIBLE FOR THE ACCURACY OR COMPLETENESS OF SCANNED COPIES OF THIS PLAN SHEET.

Y&C TRANSPORTATION CONSULTANTS, INC.
3250 Ramos Circle
Sacramento, CA 95827

VTA
3331 N First St
Building B
San Jose, CA 95134

REVISED BY | DATE REVISED
MENG YANG | DAN YAU
CALCULATED-DESIGNED BY | CHECKED BY
CONSULTANT FUNCTIONAL SUPERVISOR: TIMOTHY J. LEE

STATE OF CALIFORNIA - DEPARTMENT OF TRANSPORTATION
Caltrans

TEMPORARY SIGNAL AND LIGHTING (CITY)
(STAGE 1 PHASE 2)

CITY STREET LOCATION 5 (PROPOSED)
APPROVED FOR ELECTRICAL WORK ONLY

E-95

LAST REVISION 00-00-00 | DATE PLOTTED => $DATE | TIME PLOTTED => $TIME

BORDER LAST REVISED 7/2/2010 | USERNAME => $USER | DGN FILE => $REQUEST | RELATIVE BORDER SCALE IS IN INCHES 0 1 2 3 | UNIT 0712 | PROJECT NUMBER & PHASE 0413000204

Dist	COUNTY	ROUTE	POST MILES TOTAL PROJECT	SHEET No.	TOTAL SHEETS
04	SCL	101,237	45.2/45.8, 2.7/3.3	477	736

6-13-18
REGISTERED CIVIL ENGINEER — DATE

6-20-18
PLANS APPROVAL DATE

REGISTERED PROFESSIONAL ENGINEER
KIN Y. CHAN
No. 55391
Exp. 12/31/18
CIVIL
STATE OF CALIFORNIA

THE STATE OF CALIFORNIA OR ITS OFFICERS OR AGENTS SHALL NOT BE RESPONSIBLE FOR THE ACCURACY OR COMPLETENESS OF SCANNED COPIES OF THIS PLAN SHEET.

Y&C TRANSPORTATION CONSULTANTS, INC.
3250 Ramos Circle
Sacramento, CA 95827

VTA
3331 N First St
Building B
San Jose, CA 95134

NOTE:

FOR ACCURATE RIGHT OF WAY DATA, CONTACT RIGHT OF WAY ENGINEERING AT THE DISTRICT OFFICE.

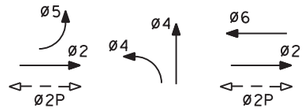

EXISTING PHASE DIAGRAM
STEADY DEMAND SEQUENCE

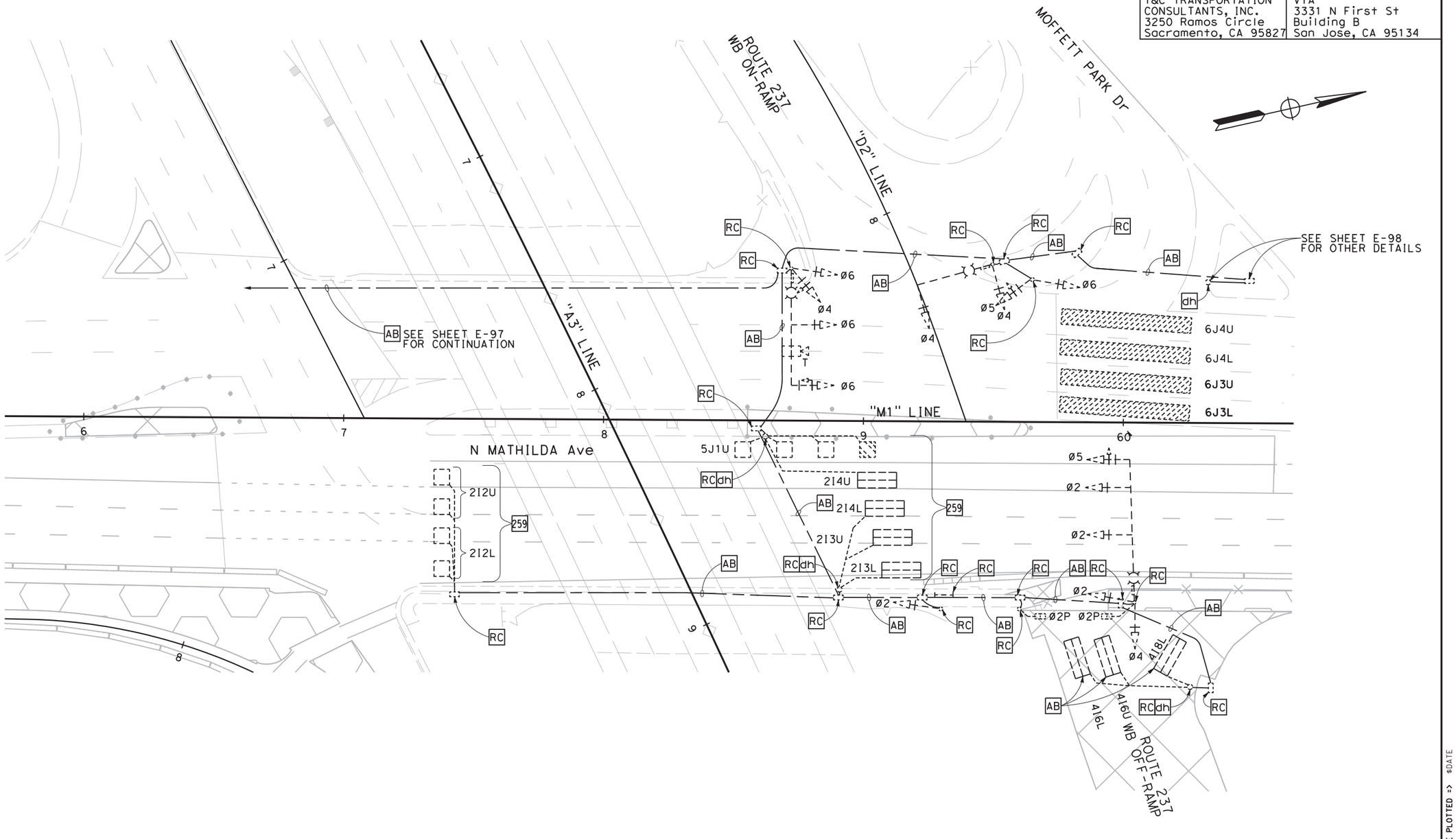

FOR NOTES AND LEGEND, SEE SHEETS E-46 TO E-48

CITY STREET LOCATION 6 (EXISTING)

APPROVED FOR ELECTRICAL WORK ONLY

TEMPORARY SIGNAL AND LIGHTING (CITY)

(STAGE 1 PHASE 2)

SCALE: 1" = 20'

E-96

STATE OF CALIFORNIA - DEPARTMENT OF TRANSPORTATION
Caltrans

CONSULTANT FUNCTIONAL SUPERVISOR: TIMOTHY J. LEE
CALCULATED-DESIGNED BY: MENG YANG
CHECKED BY: DAN YAU
REVISED BY
DATE REVISED

LAST REVISION 00-00-00
DATE PLOTTED => $DATE
TIME PLOTTED => $TIME

BORDER LAST REVISED 7/2/2010
USERNAME => $USER
DGN FILE => $REQUEST
RELATIVE BORDER SCALE IS IN INCHES 0 1 2 3
UNIT 0712
PROJECT NUMBER & PHASE 0413000204

NOTE:

FOR ACCURATE RIGHT OF WAY DATA, CONTACT RIGHT OF WAY ENGINEERING AT THE DISTRICT OFFICE.

Dist	COUNTY	ROUTE	POST MILES TOTAL PROJECT	SHEET No.	TOTAL SHEETS
04	SCL	101,237	45.2/45.8, 2.7/3.3	478	736

REGISTERED CIVIL ENGINEER — DATE: 6-13-18

PLANS APPROVAL DATE: 6-20-18

REGISTERED PROFESSIONAL ENGINEER — KIN Y. CHAN — No. 55391 — Exp. 12/31/18 — CIVIL — STATE OF CALIFORNIA

THE STATE OF CALIFORNIA OR ITS OFFICERS OR AGENTS SHALL NOT BE RESPONSIBLE FOR THE ACCURACY OR COMPLETENESS OF SCANNED COPIES OF THIS PLAN SHEET.

Y&C TRANSPORTATION CONSULTANTS, INC.
3250 Ramos Circle
Sacramento, CA 95827

VTA
3331 N First St
Building B
San Jose, CA 95134

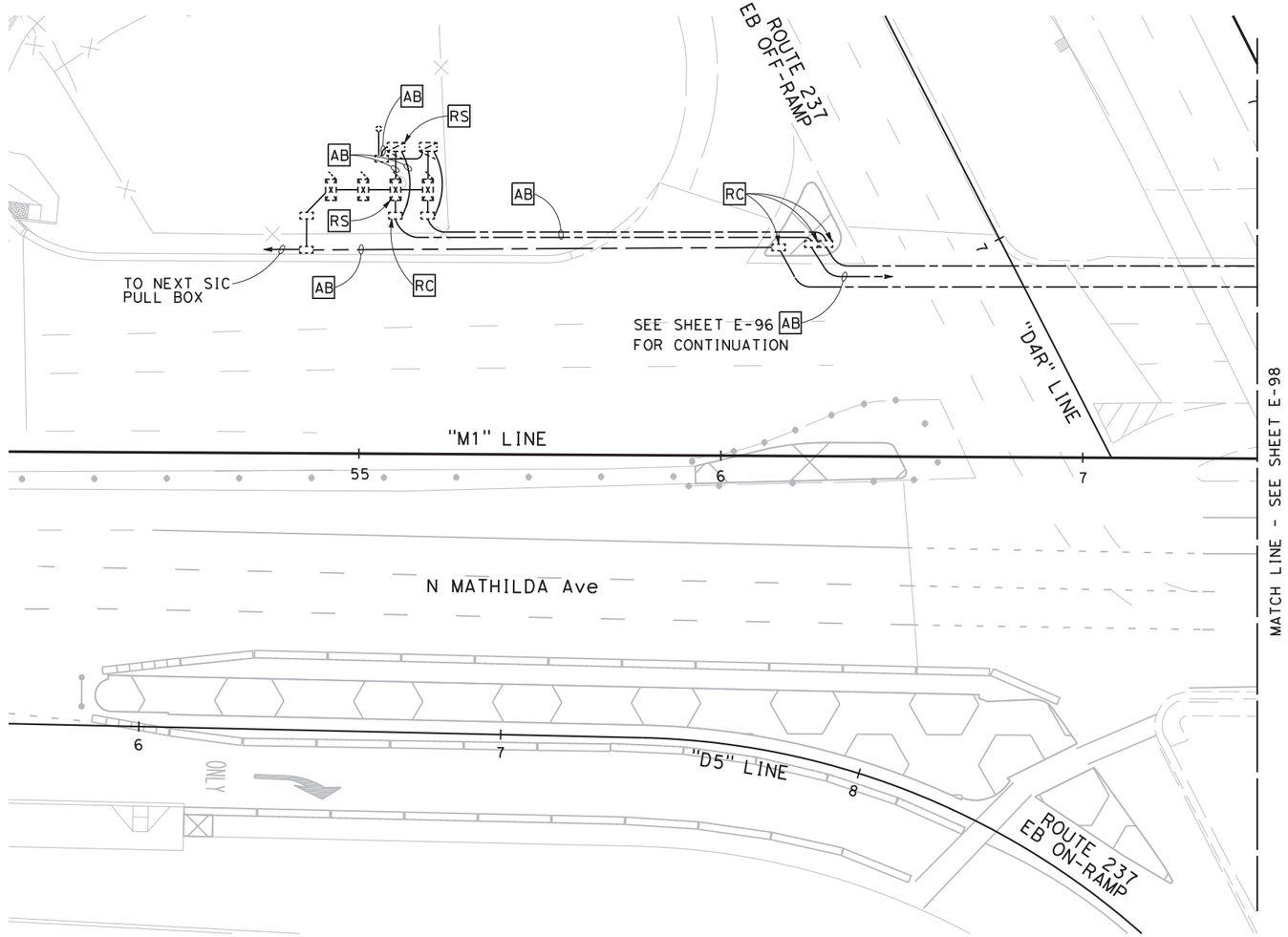

FOR NOTES AND LEGEND, SEE SHEETS E-46 TO E-48

CITY STREET LOCATION 7 (EXISTING)

APPROVED FOR ELECTRICAL WORK ONLY

TEMPORARY SIGNAL AND LIGHTING (CITY)
(STAGE 1 PHASE 2)

SCALE: 1" = 20'

E-97

MENG YANG	REVISED BY
DAN YAU	DATE REVISED
CALCULATED-DESIGNED BY	
CHECKED BY	
CONSULTANT FUNCTIONAL SUPERVISOR	
TIMOTHY J.LEE	
STATE OF CALIFORNIA - DEPARTMENT OF TRANSPORTATION	
Caltrans	

LAST REVISION 00-00-00 — DATE PLOTTED => $DATE — TIME PLOTTED => $TIME

BORDER LAST REVISED 7/2/2010 — USERNAME => $USER — DGN FILE => $REQUEST — RELATIVE BORDER SCALE IS IN INCHES 0 1 2 3 — UNIT 0712 — PROJECT NUMBER & PHASE 0413000204

NOTE:

FOR ACCURATE RIGHT OF WAY DATA, CONTACT RIGHT OF WAY ENGINEERING AT THE DISTRICT OFFICE.

Dist	COUNTY	ROUTE	POST MILES TOTAL PROJECT	SHEET No.	TOTAL SHEETS
04	SCL	101,237	45.2/45.8, 2.7/3.3	479	736

6-13-18
REGISTERED CIVIL ENGINEER DATE

6-20-18
PLANS APPROVAL DATE

REGISTERED PROFESSIONAL ENGINEER
KIN Y. CHAN
No. 55391
Exp. 12/31/18
CIVIL
STATE OF CALIFORNIA

THE STATE OF CALIFORNIA OR ITS OFFICERS OR AGENTS SHALL NOT BE RESPONSIBLE FOR THE ACCURACY OR COMPLETENESS OF SCANNED COPIES OF THIS PLAN SHEET.

Y&C TRANSPORTATION CONSULTANTS, INC.
3250 Ramos Circle
Sacramento, CA 95827

VTA
3331 N First St
Building B
San Jose, CA 95134

TO NEXT SIC PULL BOX

6(T) 7J5L dh 4J8U8 4J8L AB 6(T) 6(T) 6(T) 86' R/W MOFFETT PARK Dr 7J5U 160418L

AB 418U dh SEE SHEET E-96 FOR OTHER DETAILS

N MATHILDA Ave

"D2" LINE "L6" LINE "M1" LINE "D3" LINE "A3" LINE

MATCH LINE - SEE SHEET E-97

5J1L 5J1U 213U 212L 212U

RC AB RC

PBA(Ø8P) PBA(Ø2P) R/W DRIVEWAY 177'

6J4U 6J4L 6J3U 6J3L 111U 6J2U 6J2L

MOFFETT PARK Dr 315L 315U 8J6L

EXISTING PHASE DIAGRAM

STEADY DEMAND SEQUENCE

FOR NOTES AND LEGEND, SEE SHEETS E-46 TO E-48

CITY STREET LOCATION 7 (EXISTING)

APPROVED FOR ELECTRICAL WORK ONLY

TEMPORARY SIGNAL AND LIGHTING (CITY)

(STAGE 1 PHASE 2)

SCALE: 1" = 20'

E-98

STATE OF CALIFORNIA - DEPARTMENT OF TRANSPORTATION
CONSULTANT FUNCTIONAL SUPERVISOR: TIMOTHY J. LEE
CALCULATED-DESIGNED BY: MENG YANG
CHECKED BY: DAN YAU
REVISED BY
DATE REVISED
LAST REVISION 00-00-00
DATE PLOTTED => $DATE
TIME PLOTTED => $TIME

BORDER LAST REVISED 7/2/2010
USERNAME => $USER
DGN FILE => $REQUEST
RELATIVE BORDER SCALE IS IN INCHES 0 1 2 3
UNIT 0712
PROJECT NUMBER & PHASE 0413000204

NOTES:

1. FOR ACCURATE RIGHT OF WAY DATA, CONTACT RIGHT OF WAY ENGINEERING AT THE DISTRICT OFFICE.
2. FOR SCHEDULES, SEE SHEET E-101.

Dist	COUNTY	ROUTE	POST MILES TOTAL PROJECT	SHEET No.	TOTAL SHEETS
04	SCL	101,237	45.2/45.8, 2.7/3.3	480	736

6-13-18
REGISTERED CIVIL ENGINEER — DATE

6-20-18
PLANS APPROVAL DATE

REGISTERED PROFESSIONAL ENGINEER
KIN Y. CHAN
No. 55391
Exp. 12/31/18
CIVIL
STATE OF CALIFORNIA

THE STATE OF CALIFORNIA OR ITS OFFICERS OR AGENTS SHALL NOT BE RESPONSIBLE FOR THE ACCURACY OR COMPLETENESS OF SCANNED COPIES OF THIS PLAN SHEET.

Y&C TRANSPORTATION CONSULTANTS, INC.
3250 Ramos Circle
Sacramento, CA 95827

VTA
3331 N First St
Building B
San Jose, CA 95134

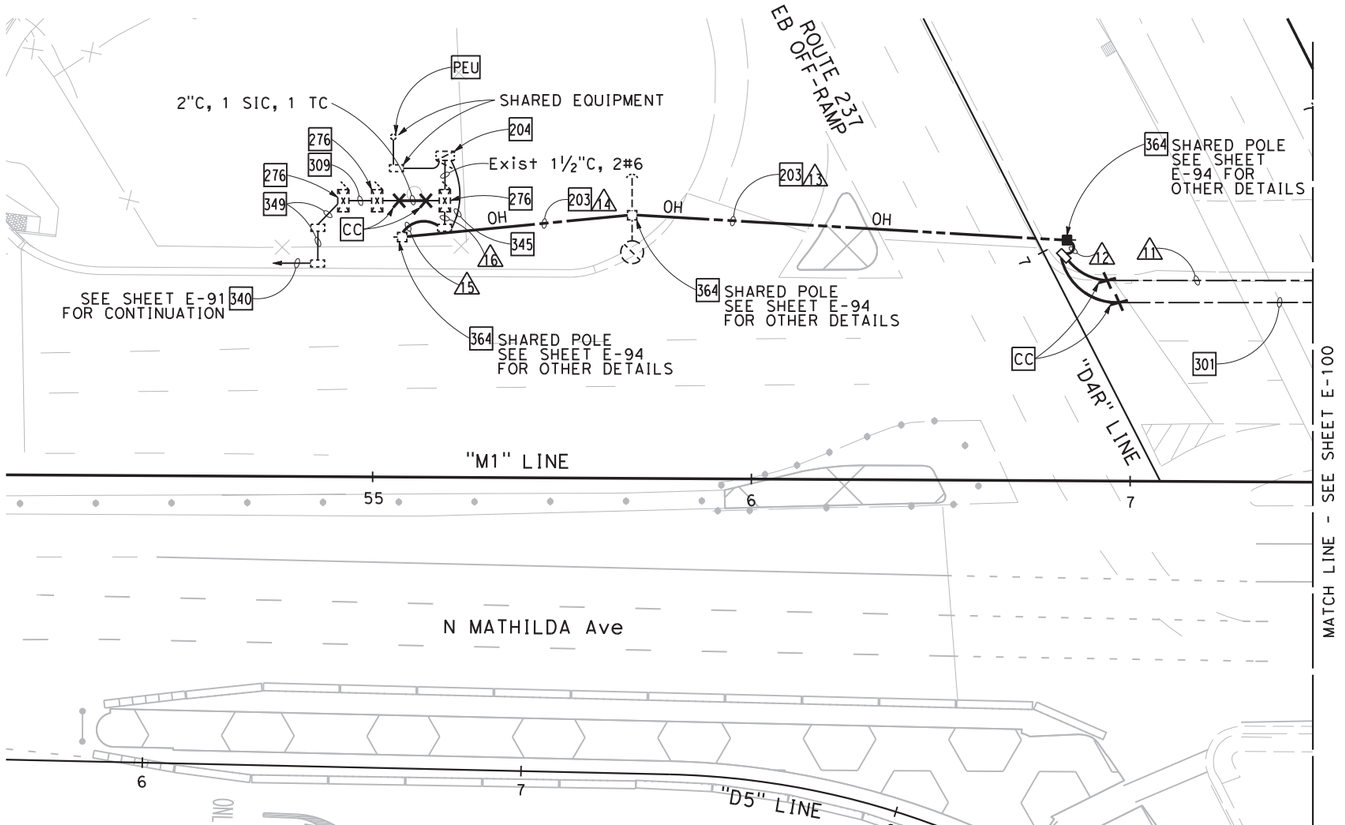

FOR NOTES AND LEGEND, SEE SHEETS E-46 TO E-48

CITY STREET LOCATION 7 (PROPOSED)

APPROVED FOR ELECTRICAL WORK ONLY

TEMPORARY SIGNAL AND LIGHTING (CITY)
(STAGE 1 PHASE 2)

SCALE: 1" = 20'

E-99

STATE OF CALIFORNIA - DEPARTMENT OF TRANSPORTATION
CONSULTANT FUNCTIONAL SUPERVISOR: TIMOTHY J. LEE
CALCULATED-DESIGNED BY: MENG YANG
CHECKED BY: DAN YAU
REVISED BY
DATE REVISED

LAST REVISION: 00-00-00
DATE PLOTTED => $DATE
TIME PLOTTED => $TIME

BORDER LAST REVISED 7/2/2010
USERNAME => $USER
DGN FILE => $REQUEST
RELATIVE BORDER SCALE IS IN INCHES 0 1 2 3
UNIT 0712
PROJECT NUMBER & PHASE 0413000204

NOTES:

1. FOR ACCURATE RIGHT OF WAY DATA, CONTACT RIGHT OF WAY ENGINEERING AT THE DISTRICT OFFICE.
2. FOR SCHEDULES, SEE SHEET E-101.

Dist	COUNTY	ROUTE	POST MILES TOTAL PROJECT	SHEET No.	TOTAL SHEETS
04	SCL	101,237	45.2/45.8, 2.7/3.3	481	736

REGISTERED CIVIL ENGINEER 6-13-18 DATE

6-20-18 PLANS APPROVAL DATE

REGISTERED PROFESSIONAL ENGINEER KIN Y. CHAN No. 55391 Exp. 12/31/18 CIVIL STATE OF CALIFORNIA

THE STATE OF CALIFORNIA OR ITS OFFICERS OR AGENTS SHALL NOT BE RESPONSIBLE FOR THE ACCURACY OR COMPLETENESS OF SCANNED COPIES OF THIS PLAN SHEET.

Y&C TRANSPORTATION CONSULTANTS, INC.
3250 Ramos Circle
Sacramento, CA 95827

VTA
3331 N First St
Building B
San Jose, CA 95134

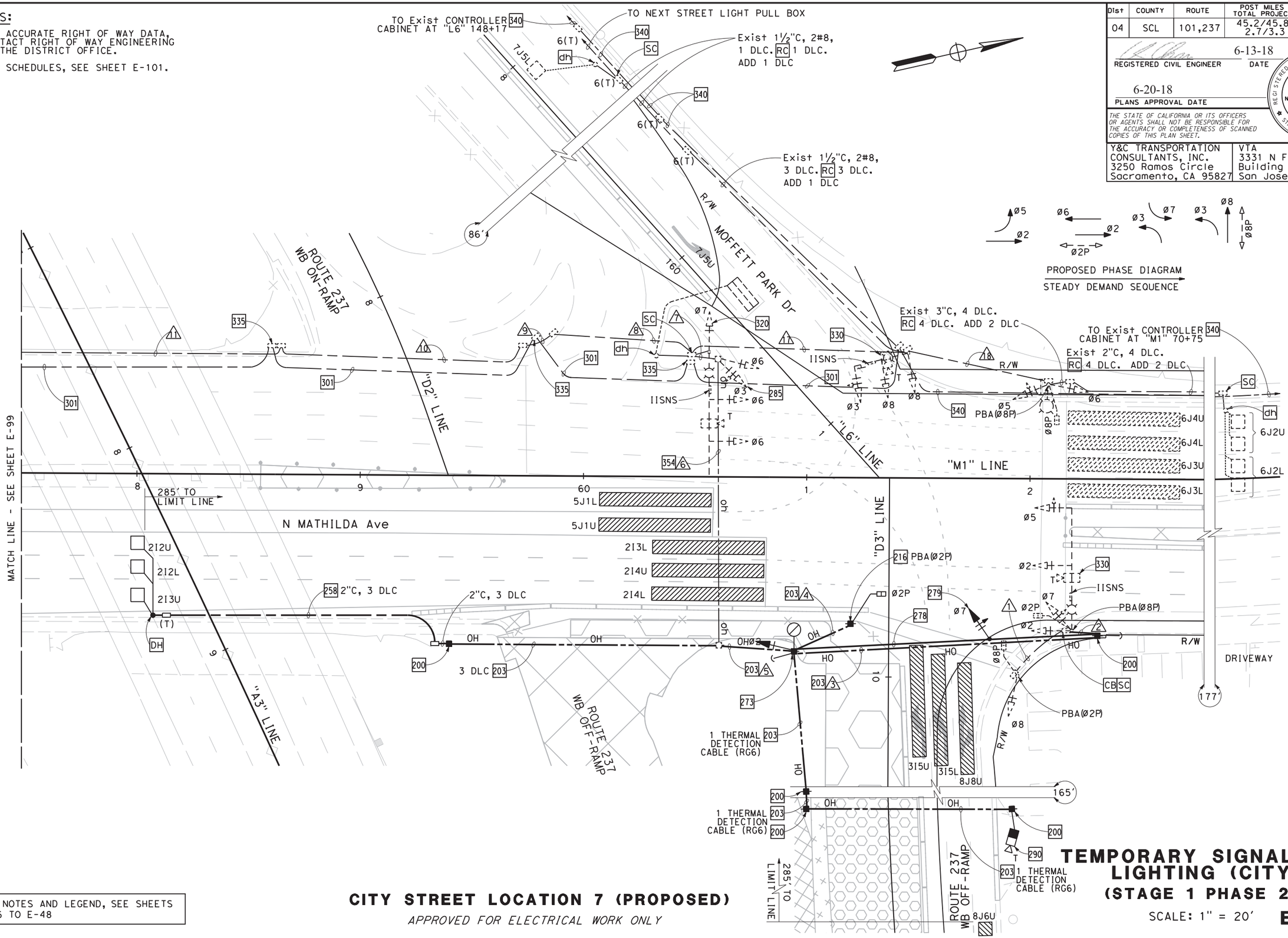

FOR NOTES AND LEGEND, SEE SHEETS E-46 TO E-48

CITY STREET LOCATION 7 (PROPOSED)

APPROVED FOR ELECTRICAL WORK ONLY

TEMPORARY SIGNAL AND LIGHTING (CITY)

(STAGE 1 PHASE 2)

SCALE: 1" = 20'

E-100

STATE OF CALIFORNIA - DEPARTMENT OF TRANSPORTATION

Caltrans

CONSULTANT FUNCTIONAL SUPERVISOR: TIMOTHY J. LEE

CALCULATED-DESIGNED BY: MENG YANG

CHECKED BY: DAN YAU

REVISED BY

DATE REVISED

LAST REVISION 00-00-00

DATE PLOTTED => $DATE

TIME PLOTTED => $TIME

BORDER LAST REVISED 7/2/2010

USERNAME => $USER
DGN FILE => $REQUEST

RELATIVE BORDER SCALE IS IN INCHES 0 1 2 3

UNIT 0712

PROJECT NUMBER & PHASE 0413000204

SCHEDULE: (FOR SHEETS E-99 AND E-100)

CONDUCTOR AND CONDUIT SCHEDULE

CONDUCTOR SCHEDULE	No. OF CONDUCTORS CONDUIT RUN NUMBER /1	/2	/3	/4	/5	/6	/7	/8	/9	/10	/11	/12	/13	/14	/15	/16	/17	/18
No. 14 CONDUCTORS																		
Ø2	3⁻	3	3		3	3	3	3	3	3	3	3	3	3	3			
Ø3							3	3	3	3	3	3	3	3	3	3	3	
Ø5	3⁻	3	3		3	3	3	6	6	6	6	6	6	6	6	6	3	3
Ø6							3	3	3	3	3	3	3	3	3	3	3	3
Ø7	3⁻	3	3		3	3	3	3	3	3	3	3	3	3	3			
Ø8	3⁺	3	3		3	3	3	6	6	6	6	6	6	6	6	3		
Ø2P	2⁺	2	2	2	2	2	2	2	2	2	2	2	2	2	2			
Ø8P		2	2		2	2	2	4	4	4	4	4	4	4	4	2	2	
PBA Ø2P	1⁺	1	1	1	1	1	1	1	1	1	1	1	1	1	1			
PBA Ø8P	1⁻	1	1		1	1	1	2	2	2	2	2	2	2	2	1	1	
PBA COMMON	1	1	1	1	1	1	1	2	2	2	2	2	2	2	2	1	1	
SPARES	3	3	3	3	3	3	3	6	6	6	6	6	6	6	6	3	3	
TOTAL No. 14	9	22	22	7	22	22	22	41	41	41	41	41	41	41	41	19	13	
No. 8 CONDUCTORS																		
IISNS	2⁻	2	2		2	2	2	2	2	2	2	2	2	2	2	2		
LIGHTING	2⁻	2	2		2	2	2	2	2	2	2	2	2	2	2	2	2	
SIGNAL NEUTRAL	1⁻	1	1		1	1	1	2	2	2	2	2	2	2	2	1	1	
TOTAL No. 8		5	5		5	5	5	6	6	6	6	6	6	6	6	5	3	
DETECTOR CABLES (DLC)																		
2I2U						1⁺	1⁺	1⁺	1⁺	1⁺	1⁺	1	1	1	1	1⁺		
2I2L						1⁺	1⁺	1⁺	1⁺	1⁺	1⁺	1	1	1	1	1⁺		
2I3U						1⁺	1⁺	1⁺	1⁺	1⁺	1⁺	1	1	1	1	1⁺		
4I8U								1⁻	1⁻	1⁻	1⁻					1⁻		
4I8L								1⁻	1⁻	1⁻	1⁻					1⁻		
4J8U								1⁻	1⁻	1⁻	1⁻					1⁻	1⁻	
4J8L								1⁻	1⁻	1⁻	1⁻					1⁻	1⁻	
6J2U								2⁻ 1⁺	2⁻ 1⁺	2⁻ 1⁺	2⁻ 1⁺	2	2	2	2	2⁻ 1⁺	2⁻ 1⁺	2⁻ 1⁺
6J2L								2⁻ 1⁺	2⁻ 1⁺	2⁻ 1⁺	2⁻ 1⁺	2	2	2	2	2⁻ 1⁺	2⁻ 1⁺	2⁻ 1⁺
7J5U								1⁻ 1⁺	1⁻ 1⁺	1⁻ 1⁺	1⁻ 1⁺	1	1	1	1	1⁻ 1⁺		
7J5L								1⁻ 1⁺	1⁻ 1⁺	1⁻ 1⁺	1⁻ 1⁺	1	1	1	1	1⁻ 1⁺	1⁻ 1⁺	
TOTAL DETECTOR CABLES						3	3	7	7	7	7	7	7	7	7	7	3	2
THERMAL VEHICLE DETECTION CABLE (RG6)	1⁻	1	1		2	1⁻ 2⁺	1⁻ 2⁺	3⁻ 4⁺	3⁻ 4⁺	3⁻ 4⁺	3⁻ 4⁺	4	4	4	4	3⁻ 4⁺	1⁻ 1⁺	
SIC												2	2	2	2	2⁺		
CONDUIT SIZE (INCHES)	2	3	OH	OH	OH	OH	3	2-3"	2-3"	2-3"	2-3"	4	OH	OH	4	2-3"	3	3
NEW/EXISTING CONDUIT	E	N	N	N	N	E	E	E	E	E	E	N	N	N	N	E	E	E
% FILL	14	14					21	20	20	20	20	25			25	22	15	8

- REMOVE Exist CONDUCTOR(S)/CABLE(S).
+ ADD NEW CONDUCTOR(S)/CABLE(S).

FOR NOTES AND LEGEND, SEE SHEETS E-46 TO E-48

Dist	COUNTY	ROUTE	POST MILES TOTAL PROJECT	SHEET No.	TOTAL SHEETS
04	SCL	101,237	45.2/45.8, 2.7/3.3	482	736

6-13-18
REGISTERED CIVIL ENGINEER — DATE

REGISTERED PROFESSIONAL ENGINEER
KIN Y. CHAN
No. 55391
Exp. 12/31/18
CIVIL
STATE OF CALIFORNIA

6-20-18
PLANS APPROVAL DATE

THE STATE OF CALIFORNIA OR ITS OFFICERS OR AGENTS SHALL NOT BE RESPONSIBLE FOR THE ACCURACY OR COMPLETENESS OF SCANNED COPIES OF THIS PLAN SHEET.

Y&C TRANSPORTATION CONSULTANTS, INC.
3250 Ramos Circle
Sacramento, CA 95827

VTA
3331 N First St
Building B
San Jose, CA 95134

REVISED BY | DATE REVISED
MENG YANG | DAN YAU
CALCULATED-DESIGNED BY | CHECKED BY
CONSULTANT FUNCTIONAL SUPERVISOR: TIMOTHY J. LEE
STATE OF CALIFORNIA - DEPARTMENT OF TRANSPORTATION

TEMPORARY SIGNAL AND LIGHTING (CITY)
(STAGE 1 PHASE 2)

CITY STREET LOCATION 7 (PROPOSED)

APPROVED FOR ELECTRICAL WORK ONLY

E-101

LAST REVISION 00-00-00 | DATE PLOTTED => $DATE | TIME PLOTTED => $TIME

BORDER LAST REVISED 7/2/2010 | USERNAME => $USER | DGN FILE => $REQUEST | RELATIVE BORDER SCALE IS IN INCHES 0 1 2 3 | UNIT 0712 | PROJECT NUMBER & PHASE 0413000204

NOTE:

FOR ACCURATE RIGHT OF WAY DATA, CONTACT
RIGHT OF WAY ENGINEERING AT THE DISTRICT OFFICE.

Dist	COUNTY	ROUTE	POST MILES TOTAL PROJECT	SHEET No.	TOTAL SHEETS
04	SCL	101,237	45.2/45.8, 2.7/3.3	483	736

6-13-18
REGISTERED CIVIL ENGINEER DATE

KIN Y. CHAN
No. 55391
Exp. 12/31/18
CIVIL
REGISTERED PROFESSIONAL ENGINEER
STATE OF CALIFORNIA

6-20-18
PLANS APPROVAL DATE

THE STATE OF CALIFORNIA OR ITS OFFICERS OR AGENTS SHALL NOT BE RESPONSIBLE FOR THE ACCURACY OR COMPLETENESS OF SCANNED COPIES OF THIS PLAN SHEET.

Y&C TRANSPORTATION CONSULTANTS, INC.
3250 Ramos Circle
Sacramento, CA 95827

VTA
3331 N First St
Building B
San Jose, CA 95134

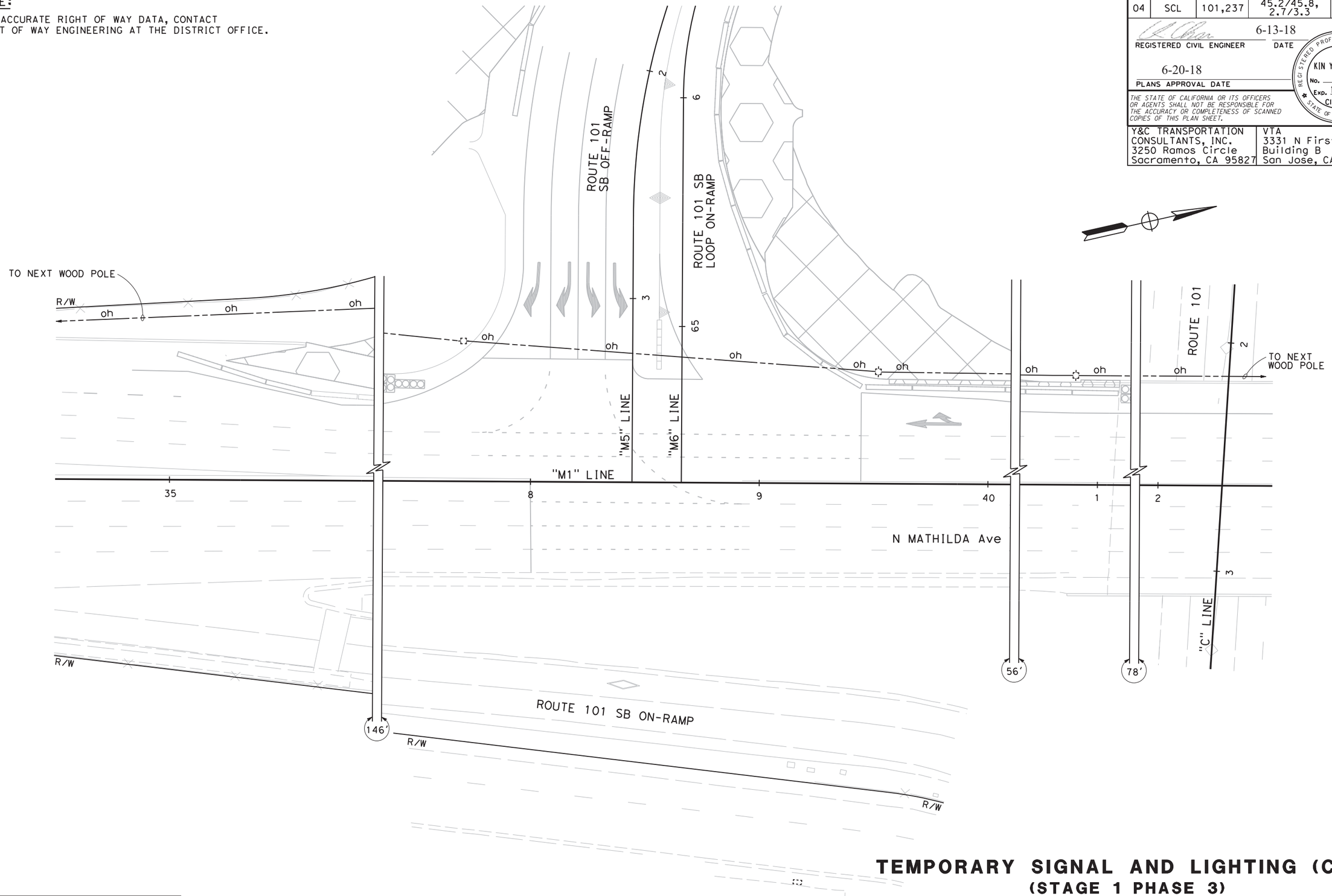

FOR NOTES AND LEGEND, SEE SHEETS E-46 TO E-48

CITY STREET LOCATION 2 (EXISTING)

APPROVED FOR ELECTRICAL WORK ONLY

TEMPORARY SIGNAL AND LIGHTING (CITY)

(STAGE 1 PHASE 3)

SCALE: 1" = 20'

E-102

STATE OF CALIFORNIA - DEPARTMENT OF TRANSPORTATION
CONSULTANT FUNCTIONAL SUPERVISOR: TIMOTHY J. LEE
CALCULATED-DESIGNED BY: MENG YANG
CHECKED BY: DAN YAU
REVISED BY / DATE REVISED

LAST REVISION 00-00-00
DATE PLOTTED => $DATE
TIME PLOTTED => $TIME

BORDER LAST REVISED 7/2/2010
USERNAME => $USER
DGN FILE => $REQUEST
RELATIVE BORDER SCALE IS IN INCHES 0 1 2 3
UNIT 0712
PROJECT NUMBER & PHASE 0413000204

NOTES:

1. FOR ACCURATE RIGHT OF WAY DATA, CONTACT RIGHT OF WAY ENGINEERING AT THE DISTRICT OFFICE.
2. FOR SCHEDULE, SEE SHEET E-104.

Dist	COUNTY	ROUTE	POST MILES TOTAL PROJECT	SHEET No.	TOTAL SHEETS
04	SCL	101,237	45.2/45.8, 2.7/3.3	484	736

6-13-18
REGISTERED CIVIL ENGINEER — DATE

KIN Y. CHAN
No. 55391
Exp. 12/31/18
CIVIL
REGISTERED PROFESSIONAL ENGINEER
STATE OF CALIFORNIA

6-20-18
PLANS APPROVAL DATE

THE STATE OF CALIFORNIA OR ITS OFFICERS OR AGENTS SHALL NOT BE RESPONSIBLE FOR THE ACCURACY OR COMPLETENESS OF SCANNED COPIES OF THIS PLAN SHEET.

Y&C TRANSPORTATION CONSULTANTS, INC.
3250 Ramos Circle
Sacramento, CA 95827

VTA
3331 N First St
Building B
San Jose, CA 95134

PROPOSED PHASE DIAGRAM
STEADY DEMAND SEQUENCE
GPS EVUD

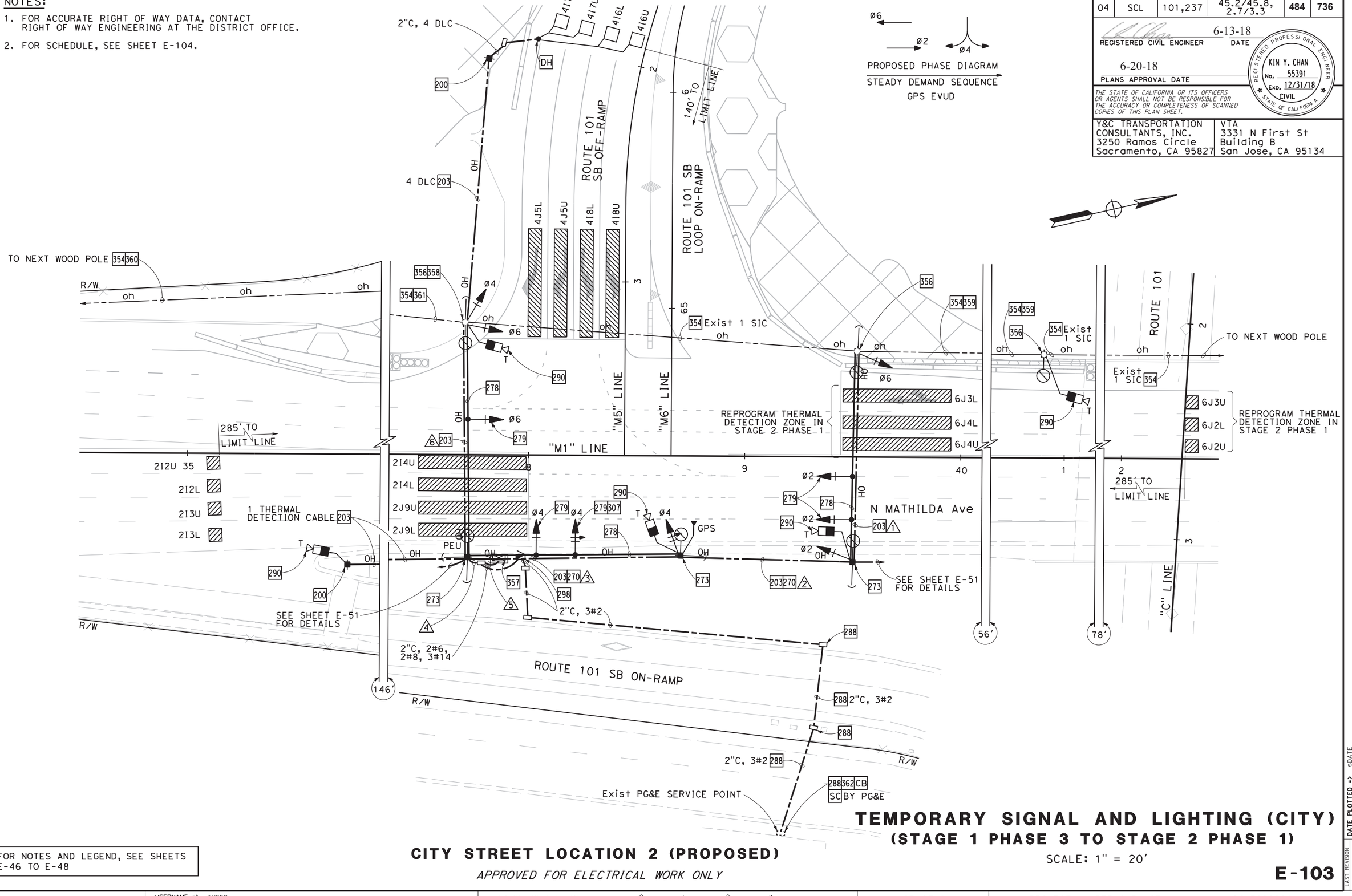

FOR NOTES AND LEGEND, SEE SHEETS E-46 TO E-48

CITY STREET LOCATION 2 (PROPOSED)

APPROVED FOR ELECTRICAL WORK ONLY

TEMPORARY SIGNAL AND LIGHTING (CITY)
(STAGE 1 PHASE 3 TO STAGE 2 PHASE 1)

SCALE: 1" = 20'

E-103

REVISED BY	DATE REVISED

MENG YANG — CALCULATED-DESIGNED BY
DAN YAU — CHECKED BY
TIMOTHY J. LEE — CONSULTANT FUNCTIONAL SUPERVISOR

STATE OF CALIFORNIA - DEPARTMENT OF TRANSPORTATION
Caltrans

DATE PLOTTED => $DATE
TIME PLOTTED => $TIME
LAST REVISION 00-00-00

BORDER LAST REVISED 7/2/2010
USERNAME => $USER
DGN FILE => $REQUEST
RELATIVE BORDER SCALE IS IN INCHES 0 1 2 3
UNIT 0712
PROJECT NUMBER & PHASE 0413000204

Dist	COUNTY	ROUTE	POST MILES TOTAL PROJECT	SHEET No.	TOTAL SHEETS
04	SCL	101,237	45.2/45.8, 2.7/3.3	485	736

6-13-18
REGISTERED CIVIL ENGINEER DATE

6-20-18
PLANS APPROVAL DATE

REGISTERED PROFESSIONAL ENGINEER
KIN Y. CHAN
No. 55391
Exp. 12/31/18
CIVIL
STATE OF CALIFORNIA

THE STATE OF CALIFORNIA OR ITS OFFICERS OR AGENTS SHALL NOT BE RESPONSIBLE FOR THE ACCURACY OR COMPLETENESS OF SCANNED COPIES OF THIS PLAN SHEET.

Y&C TRANSPORTATION CONSULTANTS, INC.
3250 Ramos Circle
Sacramento, CA 95827

VTA
3331 N First St
Building B
San Jose, CA 95134

SCHEDULE: (FOR SHEET E-103)

CONDUCTOR AND CONDUIT SCHEDULE						
CONDUCTOR SCHEDULE	No. OF CONDUCTORS					
	CONDUIT RUN NUMBER					
	1	2	3	4	5	6
No. 14 CONDUCTORS						
Ø2	3	3	3	3	3	
Ø4			3	6	6	3
Ø6	3	3	3	6	6	3
PEU				3		
SPARES	3	3	3	3	3	3
TOTAL No. 14	9	9	12	21	18	9
No. 8 CONDUCTORS						
LIGHTING	2	2	2	2		2
SIGNAL NEUTRAL	1	1	1	1	1	1
TOTAL No. 8	3	3	3	3	1	3
No. 6 CONDUCTORS						
CONTROLLER					2	
DETECTOR CABLES (DLC)						
4I6U				1	1	1
4I6L				1	1	1
4I7U				1	1	1
4I7L				1	1	1
TOTAL DETECTOR CABLES				4	4	4
THERMAL VEHICLE DETECTION CABLE	1	2	3	5	5	1
GPS EVUC			1	1	1	
SIC				1#	1#	1#
CONDUIT SIZE (INCHES)	OH	OH	OH	2-3"	2-3"	OH
NEW/EXISTING CONDUIT	N	N	N	N	N	N
% FILL				20	20	

ADD 1 Exist SIC PER NOTE 358.

NOTE:
THE CONTRACTOR MUST VERIFY ALL CONTROLLING FIELD DIMENSIONS BEFORE ORDERING OR FABRICATING ANY MATERIAL.

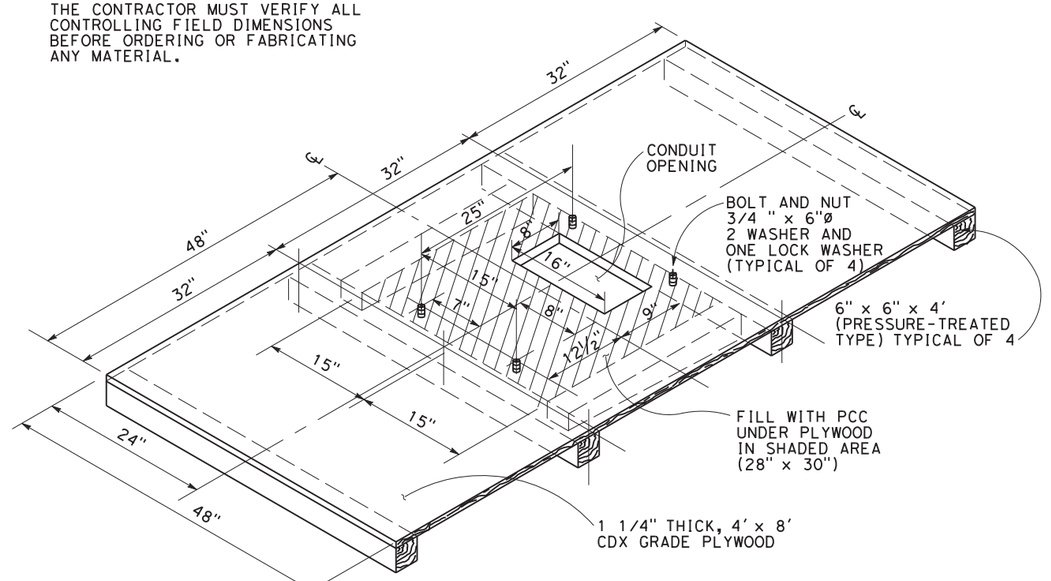

TEMPORARY WOOD FOUNDATION FOR TYPE 332 CABINET
NO SCALE

FOR NOTES AND LEGEND, SEE SHEETS E-46 TO E-48

CITY STREET LOCATION 2 (PROPOSED)

TEMPORARY SIGNAL AND LIGHTING (CITY)
(STAGE 1 PHASE 3 TO STAGE 2 PHASE 1)

E-104

REVISED BY | DATE REVISED
MENG YANG | DAN YAU
CALCULATED-DESIGNED BY | CHECKED BY
CONSULTANT FUNCTIONAL SUPERVISOR: TIMOTHY J. LEE
STATE OF CALIFORNIA - DEPARTMENT OF TRANSPORTATION

DATE PLOTTED => $DATE
TIME PLOTTED => $TIME
LAST REVISION 00-00-00

BORDER LAST REVISED 7/2/2010 | USERNAME => $USER | DGN FILE => $REQUEST | RELATIVE BORDER SCALE IS IN INCHES 0 1 2 3 | UNIT 0712 | PROJECT NUMBER & PHASE 0413000204

NOTES:

1. FOR ACCURATE RIGHT OF WAY DATA, CONTACT RIGHT OF WAY ENGINEERING AT THE DISTRICT OFFICE.
2. FOR SCHEDULE, SEE SHEET E-106.

EXISTING PHASE DIAGRAM
STEADY DEMAND SEQUENCE
GPS EVUD

PROPOSED PHASE DIAGRAM
STEADY DEMAND SEQUENCE
GPS EVUD
NRT SHALL BE PROGRAMMED TO ø9P

Dist	COUNTY	ROUTE	POST MILES TOTAL PROJECT	SHEET No.	TOTAL SHEETS
04	SCL	101,237	45.2/45.8, 2.7/3.3	486	736

6-13-18
REGISTERED CIVIL ENGINEER — DATE

6-20-18
PLANS APPROVAL DATE

REGISTERED PROFESSIONAL ENGINEER
KIN Y. CHAN
No. 55391
Exp. 12/31/18
CIVIL
STATE OF CALIFORNIA

THE STATE OF CALIFORNIA OR ITS OFFICERS OR AGENTS SHALL NOT BE RESPONSIBLE FOR THE ACCURACY OR COMPLETENESS OF SCANNED COPIES OF THIS PLAN SHEET.

Y&C TRANSPORTATION CONSULTANTS, INC.
3250 Ramos Circle
Sacramento, CA 95827

VTA
3331 N First St
Building B
San Jose, CA 95134

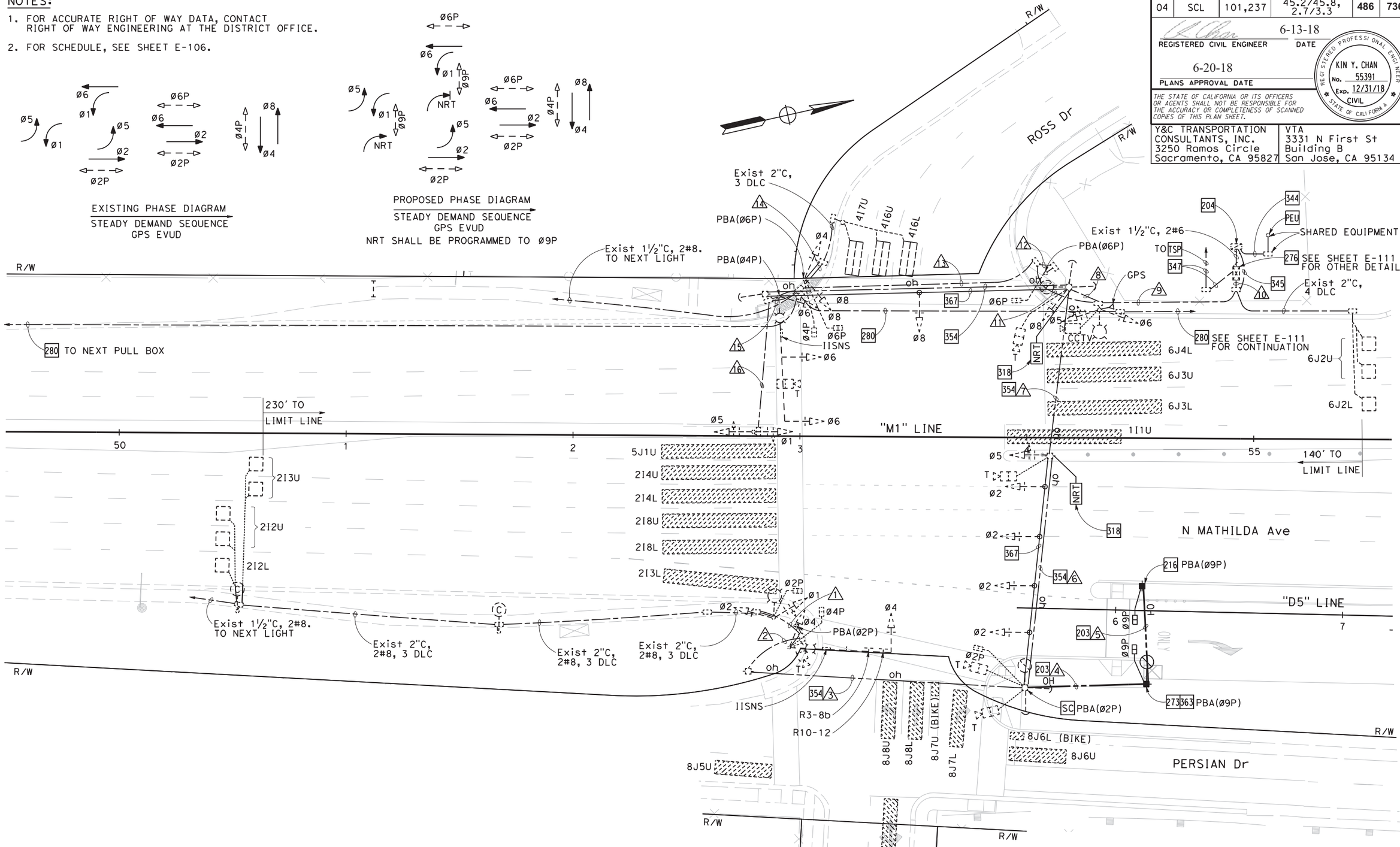

FOR NOTES AND LEGEND, SEE SHEETS E-46 TO E-48

CITY STREET LOCATION 4 (PROPOSED)

APPROVED FOR ELECTRICAL WORK ONLY

TEMPORARY SIGNAL AND LIGHTING (CITY)
(STAGE 1 PHASE 3 TO STAGE 2 PHASE 2)

SCALE: 1" = 20'

E-105

REVISED BY | DATE REVISED
MENG YANG | DAN YAU
CALCULATED-DESIGNED BY | CHECKED BY
CONSULTANT FUNCTIONAL SUPERVISOR: TIMOTHY J. LEE
STATE OF CALIFORNIA - DEPARTMENT OF TRANSPORTATION
Caltrans

LAST REVISION 00-00-00 | DATE PLOTTED => $DATE | TIME PLOTTED => $TIME

BORDER LAST REVISED 7/2/2010 | USERNAME => $USER | DGN FILE => $REQUEST | RELATIVE BORDER SCALE IS IN INCHES 0 1 2 3 | UNIT 0712 | PROJECT NUMBER & PHASE 0413000204

SCHEDULE: (FOR SHEET E-105)

CONDUCTOR AND CONDUIT SCHEDULE

CONDUCTOR SCHEDULE	No. OF CONDUCTORS CONDUIT RUN NUMBER															
	/1	/2	/3	/4	/5	/6	/7	/8	/9	/10	/11	/12	/13	/14	/15	/16
No. 14 CONDUCTORS																
Ø1	3	3	3			3	3	3	6	6	3		3		3	3
Ø2	3	3	3			3	3	3	3	3						
Ø4		3	3			3	3	3	6	6	3		3	3		
Ø5							3	3	6	6	3		3		3	3
Ø6									3	3	3		3		3	
Ø8								3	6	6	3		3	3		
Ø2P	2	2	2			2	2	2	2	2						
Ø4P		2	2			2	2	2	4	4	2		2	2		
Ø6P									2	2	2	2	2	2		
Ø9P				2	2	2+	2+	2+	2+	2+						
PBA Ø2P		1	1			1	1	1	1	1						
PBA Ø4P	1	1	1			1	1	1	2	2	1		1		1	
PBA Ø6P									2	2	1	1	1	1		
PBA Ø9P				1	1	1+	1+	1+	1+	1+						
PBA COMMON	1	1	1	1	1	1	1	1	2	2	1	1	1	1	1	
SPARES	3	3	3	3	3	3	3	3	6	6	3	3	3	3	3	3
TOTAL No. 14	13	19	19	7	7	22	25	28	54	54	25	7	25	15	14	9
No. 10 CONDUCTORS																
NRT SIGN							2+	2+	2+	2+						
TOTAL No. 10							2	2	2	2						
No. 8 CONDUCTORS																
LIGHTING & IISNS	2	2	2	2	2	2	2	2	4		2		2		2	
SIGNAL NEUTRAL	1	1	1	1	1	1	1	1	2	2	1	1	1	1	1	1
TOTAL No. 8	3	3	3	3	3	3	3	3	6	2	3	1	3	1	3	1
DETECTOR CABLES (DLC)																
2I2U	1	1	1			1	1	1	1	1						
2I2L	1	1	1			1	1	1	1	1						
2I3U	1	1	1			1	1	1	1	1						
4I6U									1	1	1		1	1		
4I6L									1	1	1		1	1		
4I7U									1	1	1		1	1		
6J2U										1						
6J2L										1						
TOTAL DETECTOR CABLES	3	3	3			3	3	3	6	8	3		3	3		
THERMAL VEHICLE DETECTION CABLE		1	1			3	4	5	6	6	1		1	1	1	
CCTV CABLE										1						
GPS EVUC									1	1						
CONDUIT SIZE (INCHES)	3	OH	OH	OH	OH	OH	OH	4	2-3"	2-3"	3	3	3	3	2	2
NEW/EXISTING CONDUIT	E	E	E	N	N	E	E	E	E	E	E	E	E	E	E	E
% FILL	9						19	26	26	22	3	16	8	22	7	

+ ADD NEW CONDUCTOR(S)/CABLE(S).

FOR NOTES AND LEGEND, SEE SHEETS E-46 TO E-48

CITY STREET LOCATION 4 (PROPOSED)

TEMPORARY SIGNAL AND LIGHTING (CITY)
(STAGE 1 PHASE 3 TO STAGE 2 PHASE 2)

E-106

Dist	COUNTY	ROUTE	POST MILES TOTAL PROJECT	SHEET No.	TOTAL SHEETS
04	SCL	101,237	45.2/45.8, 2.7/3.3	487	736

6-13-18
REGISTERED CIVIL ENGINEER — DATE

REGISTERED PROFESSIONAL ENGINEER
KIN Y. CHAN
No. 55391
Exp. 12/31/18
CIVIL
STATE OF CALIFORNIA

6-20-18
PLANS APPROVAL DATE

THE STATE OF CALIFORNIA OR ITS OFFICERS OR AGENTS SHALL NOT BE RESPONSIBLE FOR THE ACCURACY OR COMPLETENESS OF SCANNED COPIES OF THIS PLAN SHEET.

Y&C TRANSPORTATION CONSULTANTS, INC.
3250 Ramos Circle
Sacramento, CA 95827

VTA
3331 N First St
Building B
San Jose, CA 95134

REVISED BY | DATE REVISED
MENG YANG | DAN YAU
CALCULATED-DESIGNED BY | CHECKED BY
CONSULTANT FUNCTIONAL SUPERVISOR: TIMOTHY J. LEE
STATE OF CALIFORNIA - DEPARTMENT OF TRANSPORTATION

LAST REVISION 00-00-00 | DATE PLOTTED => $DATE | TIME PLOTTED => $TIME

NOTES:
FOR ACCURATE RIGHT OF WAY DATA, CONTACT RIGHT OF WAY ENGINEERING AT THE DISTRICT OFFICE.

Dist	COUNTY	ROUTE	POST MILES TOTAL PROJECT	SHEET No.	TOTAL SHEETS
04	SCL	101,237	45.2/45.8, 2.7/3.3	488	736

REGISTERED CIVIL ENGINEER 6-13-18 DATE

6-20-18
PLANS APPROVAL DATE

REGISTERED PROFESSIONAL ENGINEER KIN Y. CHAN No. 55391 Exp. 12/31/18 CIVIL STATE OF CALIFORNIA

THE STATE OF CALIFORNIA OR ITS OFFICERS OR AGENTS SHALL NOT BE RESPONSIBLE FOR THE ACCURACY OR COMPLETENESS OF SCANNED COPIES OF THIS PLAN SHEET.

Y&C TRANSPORTATION CONSULTANTS, INC.
3250 Ramos Circle
Sacramento, CA 95827

VTA
3331 N First St
Building B
San Jose, CA 95134

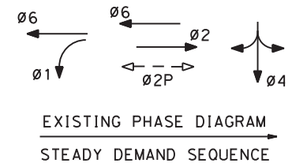

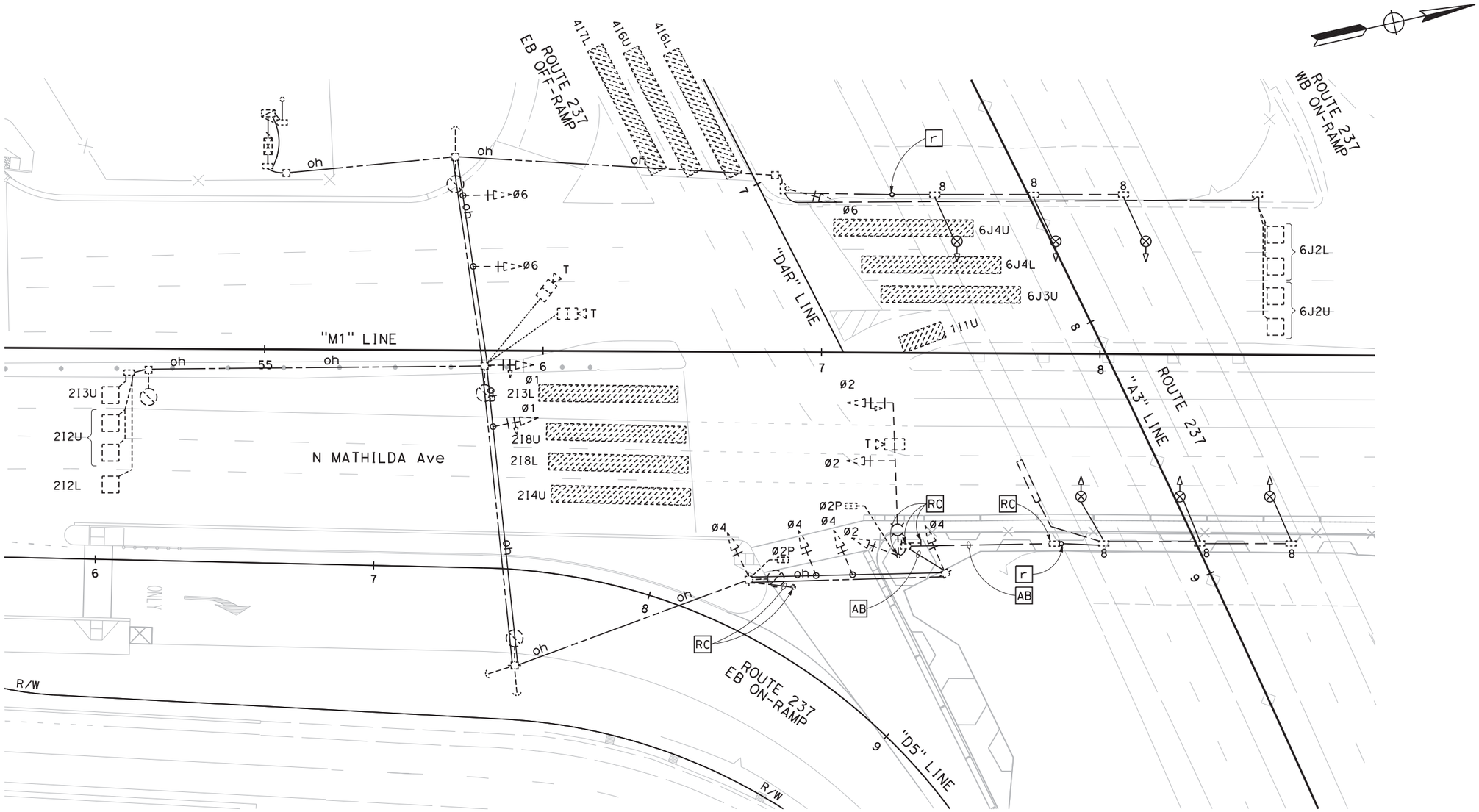

TEMPORARY SIGNAL AND LIGHTING (CITY)
(STAGE 1 PHASE 3)
SCALE: 1" = 20'

CITY STREET LOCATION 5 (EXISTING)
APPROVED FOR ELECTRICAL WORK ONLY

FOR NOTES AND LEGEND, SEE SHEETS E-46 TO E-48

E-107

STATE OF CALIFORNIA - DEPARTMENT OF TRANSPORTATION
Caltrans

CONSULTANT FUNCTIONAL SUPERVISOR: TIMOTHY J. LEE
CALCULATED-DESIGNED BY: MENG YANG
CHECKED BY: DAN YAU
REVISED BY
DATE REVISED

LAST REVISION 00-00-00
DATE PLOTTED => $DATE
TIME PLOTTED => $TIME

BORDER LAST REVISED 7/2/2010
USERNAME => $USER
DGN FILE => $REQUEST
RELATIVE BORDER SCALE IS IN INCHES 0 1 2 3
UNIT 0712
PROJECT NUMBER & PHASE 0413000204

Dist	COUNTY	ROUTE	POST MILES TOTAL PROJECT	SHEET No.	TOTAL SHEETS
04	SCL	101,237	45.2/45.8, 2.7/3.3	489	736

REGISTERED CIVIL ENGINEER 6-13-18 DATE

6-20-18
PLANS APPROVAL DATE

REGISTERED PROFESSIONAL ENGINEER KIN Y. CHAN No. 55391 Exp. 12/31/18 CIVIL STATE OF CALIFORNIA

THE STATE OF CALIFORNIA OR ITS OFFICERS OR AGENTS SHALL NOT BE RESPONSIBLE FOR THE ACCURACY OR COMPLETENESS OF SCANNED COPIES OF THIS PLAN SHEET.

Y&C TRANSPORTATION CONSULTANTS, INC.
3250 Ramos Circle
Sacramento, CA 95827

VTA
3331 N First St
Building B
San Jose, CA 95134

NOTES:

1. FOR ACCURATE RIGHT OF WAY DATA, CONTACT RIGHT OF WAY ENGINEERING AT THE DISTRICT OFFICE.
2. FOR SCHEDULES, SEE SHEET E-109.

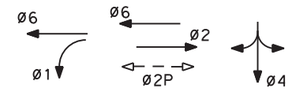

EXISTING PHASE DIAGRAM
(NO CHANGE)

STEADY DEMAND SEQUENCE

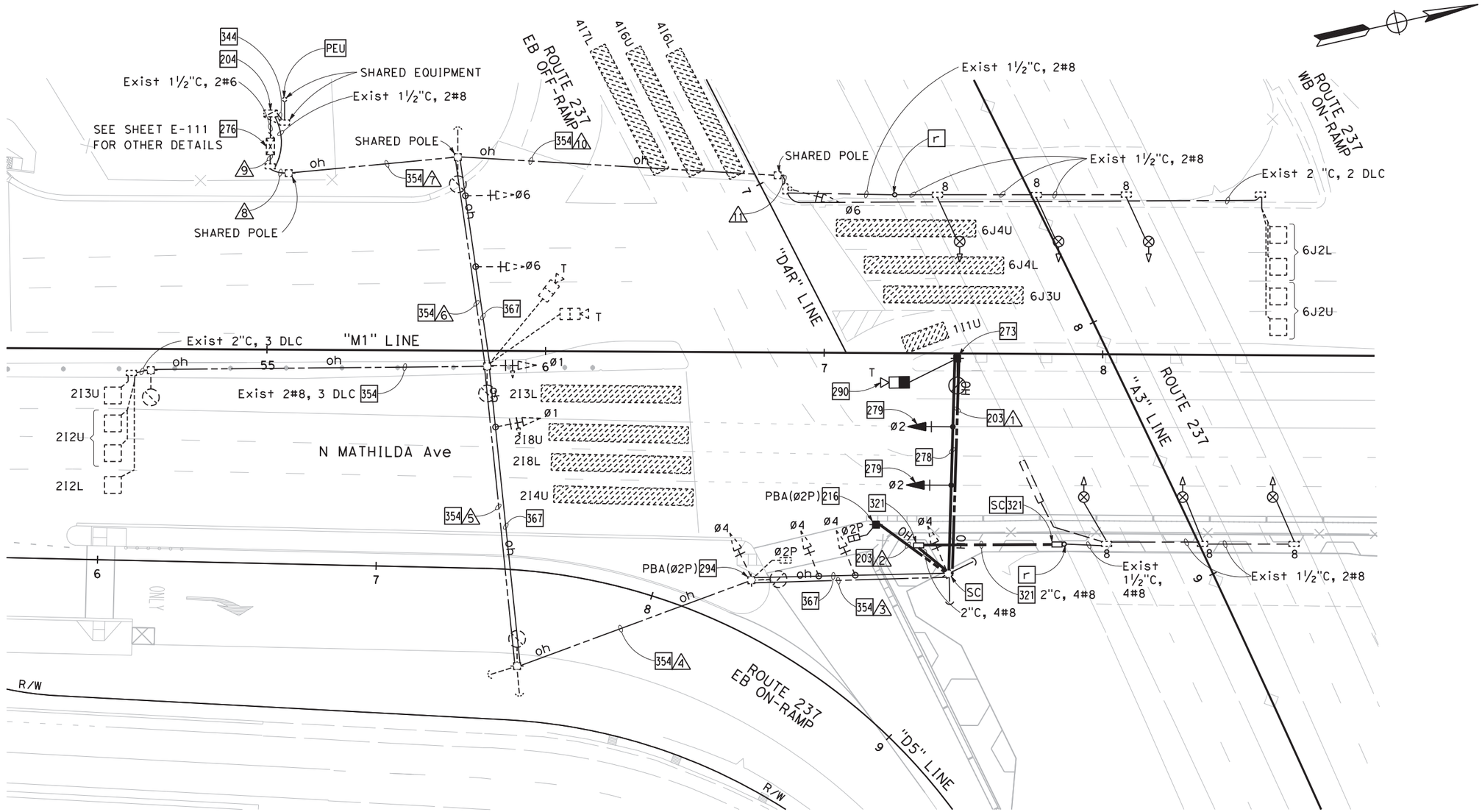

TEMPORARY SIGNAL AND LIGHTING (CITY)
(STAGE 1 PHASE 3)

SCALE: 1" = 20'

CITY STREET LOCATION 5 (PROPOSED)

APPROVED FOR ELECTRICAL WORK ONLY

FOR NOTES AND LEGEND, SEE SHEETS E-46 TO E-48

E-108

STATE OF CALIFORNIA - DEPARTMENT OF TRANSPORTATION
Caltrans

CONSULTANT FUNCTIONAL SUPERVISOR: TIMOTHY J. LEE
CALCULATED-DESIGNED BY: MENG YANG
CHECKED BY: DAN YAU
REVISED BY
DATE REVISED

LAST REVISION 00-00-00
DATE PLOTTED => $DATE
TIME PLOTTED => $TIME

Dist	COUNTY	ROUTE	POST MILES TOTAL PROJECT	SHEET No.	TOTAL SHEETS
04	SCL	101,237	45.2/45.8, 2.7/3.3	490	736

6-13-18
REGISTERED CIVIL ENGINEER — DATE

REGISTERED PROFESSIONAL ENGINEER
KIN Y. CHAN
No. 55391
Exp. 12/31/18
CIVIL
STATE OF CALIFORNIA

6-20-18
PLANS APPROVAL DATE

THE STATE OF CALIFORNIA OR ITS OFFICERS OR AGENTS SHALL NOT BE RESPONSIBLE FOR THE ACCURACY OR COMPLETENESS OF SCANNED COPIES OF THIS PLAN SHEET.

Y&C TRANSPORTATION CONSULTANTS, INC.
3250 Ramos Circle
Sacramento, CA 95827

VTA
3331 N First St
Building B
San Jose, CA 95134

SCHEDULES: (FOR SHEET E-108)

CONDUCTOR AND CONDUIT SCHEDULE

CONDUCTOR SCHEDULE	No. OF CONDUCTORS CONDUIT RUN NUMBER 1	2	3	4	5	6	7	8	9	10	11
No. 14 CONDUCTORS											
Ø1					3	3	3	3	3		
Ø2	3		3	3	3	3	3	3	3		
Ø4			3	3	3	3	3	3	3		
Ø6						3	3	3	3	3	3
Ø2P		2+	2+	2+	2+	2+	2+	2+	2+		
PBA Ø2P		1+	1+	1+	1+	1+	1+	1+	1+		
PBA COMMON		1+	1+	1+	1+	1+	1+	1+	1+		
SPARES	3	3	3	3	3	3	6	6	6	3	3
TOTAL No. 14	6	7	13	13	16	19	22	22	22	6	6
No. 8 CONDUCTORS											
LIGHTING	2	2	2	2	2	2	2	2	2	2	2
SIGN ILLUMINATION	2	2	2	2	2	2	2	2	2		
SIGNAL NEUTRAL	1	1	1	1	1	1	1	1	1	1	1
TOTAL No. 8	5	5	5	5	5	5	5	5	5	3	3
DETECTOR CABLES (DLC)											
1I1U											
2I2U						1	1	1	1		
2I2L						1	1	1	1		
2I3U						1	1	1	1		
2I3L											
2I4U											
2I4L											
2I8U											
2I8L											
4I6U											
4I6L											
4I7U											
4I7L											
6J2U							1	1	1	1	1
6J2L							1	1	1	1	1
6J3U											
6J3L											
6J4U											
6J4L											
TOTAL DETECTOR CABLES						3	5	5	5	2	2
THERMAL VEHICLE DETECTION CABLE	1	1	1- 1+	1- 1+	1- 1+	3	3	3	3		
CONDUIT SIZE (INCHES)	OH	OH	OH	OH	OH	OH	OH	4	2-3"	OH	3
NEW/EXISTING CONDUIT	N	N	E	E	E	E	E	E	E	E	E
% FILL								15	16		6

- REMOVE Exist CONDUCTOR(S)/CABLE(S).
+ ADD NEW CONDUCTOR(S)/CABLE(S).

FOR NOTES AND LEGEND, SEE SHEETS E-46 TO E-48

TEMPORARY SIGNAL AND LIGHTING (CITY)
(STAGE 1 PHASE 3)

CITY STREET LOCATION 5 (PROPOSED)
APPROVED FOR ELECTRICAL WORK ONLY

E-109

REVISED BY | DATE REVISED
MENG YANG | DAN YAU
CALCULATED-DESIGNED BY | CHECKED BY
CONSULTANT FUNCTIONAL SUPERVISOR: TIMOTHY J. LEE
STATE OF CALIFORNIA - DEPARTMENT OF TRANSPORTATION

LAST REVISION 00-00-00 | DATE PLOTTED => $DATE | TIME PLOTTED => $TIME

BORDER LAST REVISED 7/2/2010 | USERNAME => $USER | DGN FILE => $REQUEST | RELATIVE BORDER SCALE IS IN INCHES 0 1 2 3 | UNIT 0712 | PROJECT NUMBER & PHASE 0413000204

NOTE:

FOR ACCURATE RIGHT OF WAY DATA, CONTACT RIGHT OF WAY ENGINEERING AT THE DISTRICT OFFICE.

Dist	COUNTY	ROUTE	POST MILES TOTAL PROJECT	SHEET No.	TOTAL SHEETS
04	SCL	101,237	45.2/45.8, 2.7/3.3	491	736

REGISTERED CIVIL ENGINEER 6-13-18 DATE

6-20-18 PLANS APPROVAL DATE

REGISTERED PROFESSIONAL ENGINEER KIN Y. CHAN No. 55391 Exp. 12/31/18 CIVIL STATE OF CALIFORNIA

THE STATE OF CALIFORNIA OR ITS OFFICERS OR AGENTS SHALL NOT BE RESPONSIBLE FOR THE ACCURACY OR COMPLETENESS OF SCANNED COPIES OF THIS PLAN SHEET.

Y&C TRANSPORTATION CONSULTANTS, INC.
3250 Ramos Circle
Sacramento, CA 95827

VTA
3331 N First St
Building B
San Jose, CA 95134

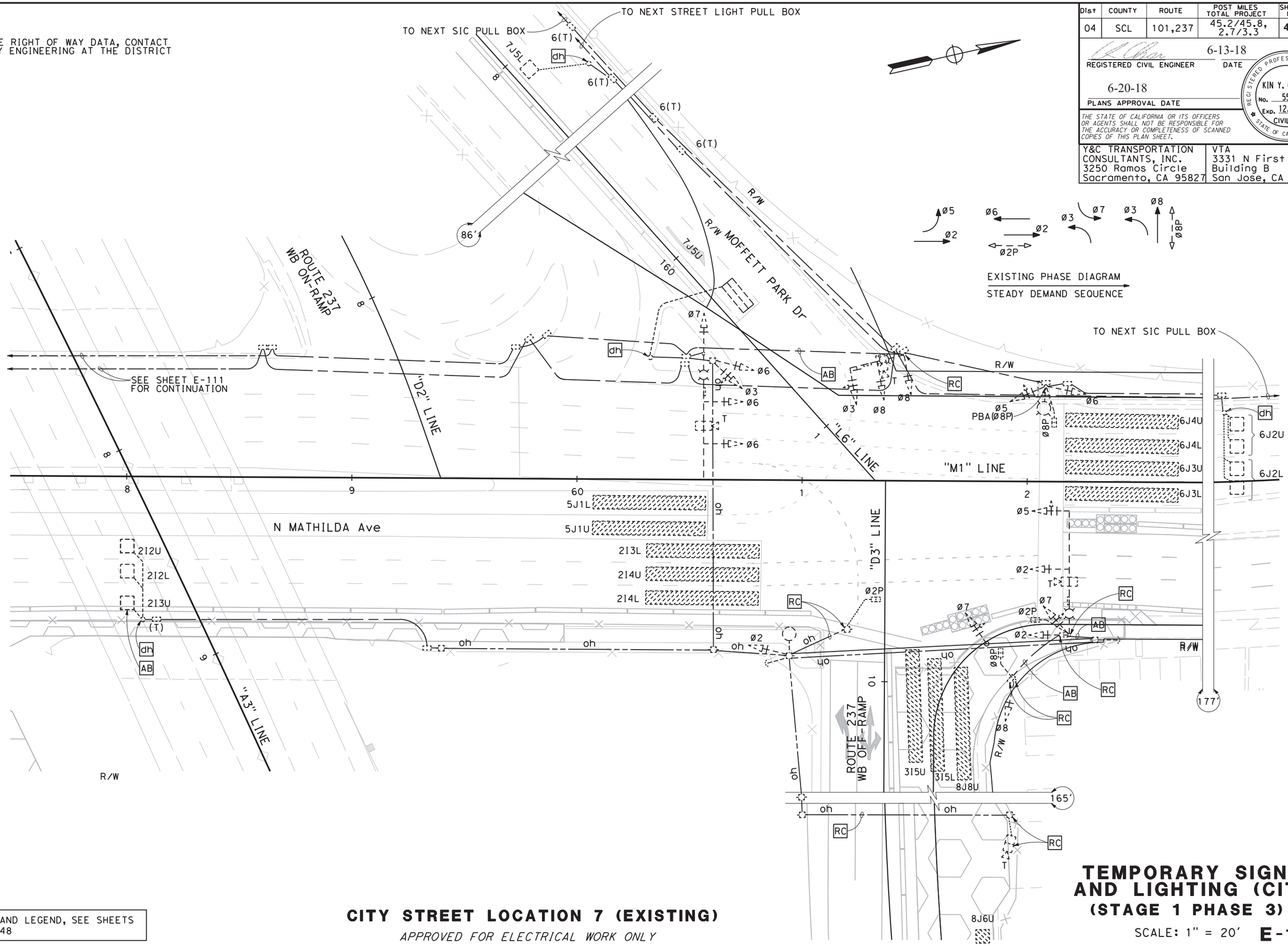

FOR NOTES AND LEGEND, SEE SHEETS E-46 TO E-48

CITY STREET LOCATION 7 (EXISTING)

APPROVED FOR ELECTRICAL WORK ONLY

TEMPORARY SIGNAL AND LIGHTING (CITY)

(STAGE 1 PHASE 3)

SCALE: 1" = 20'

E-110

STATE OF CALIFORNIA - DEPARTMENT OF TRANSPORTATION

Caltrans

CONSULTANT FUNCTIONAL SUPERVISOR: TIMOTHY J. LEE

CALCULATED-DESIGNED BY: MENG YANG

CHECKED BY: DAN YAU

REVISED BY

DATE REVISED

LAST REVISION 00-00-00

DATE PLOTTED => $DATE

TIME PLOTTED => $TIME

BORDER LAST REVISED 7/2/2010

USERNAME => $USER

DGN FILE => $REQUEST

RELATIVE BORDER SCALE IS IN INCHES 0 1 2 3

UNIT 0712

PROJECT NUMBER & PHASE 0413000204

NOTES:

1. FOR ACCURATE RIGHT OF WAY DATA, CONTACT RIGHT OF WAY ENGINEERING AT THE DISTRICT OFFICE.
2. FOR SCHEDULES, SEE SHEET E-113.

Dist	COUNTY	ROUTE	POST MILES TOTAL PROJECT	SHEET No.	TOTAL SHEETS
04	SCL	101,237	45.2/45.8, 2.7/3.3	492	736

6-13-18
REGISTERED CIVIL ENGINEER — DATE

REGISTERED PROFESSIONAL ENGINEER
KIN Y. CHAN
No. 55391
Exp. 12/31/18
CIVIL
STATE OF CALIFORNIA

6-20-18
PLANS APPROVAL DATE

THE STATE OF CALIFORNIA OR ITS OFFICERS OR AGENTS SHALL NOT BE RESPONSIBLE FOR THE ACCURACY OR COMPLETENESS OF SCANNED COPIES OF THIS PLAN SHEET.

Y&C TRANSPORTATION CONSULTANTS, INC.
3250 Ramos Circle
Sacramento, CA 95827

VTA
3331 N First St
Building B
San Jose, CA 95134

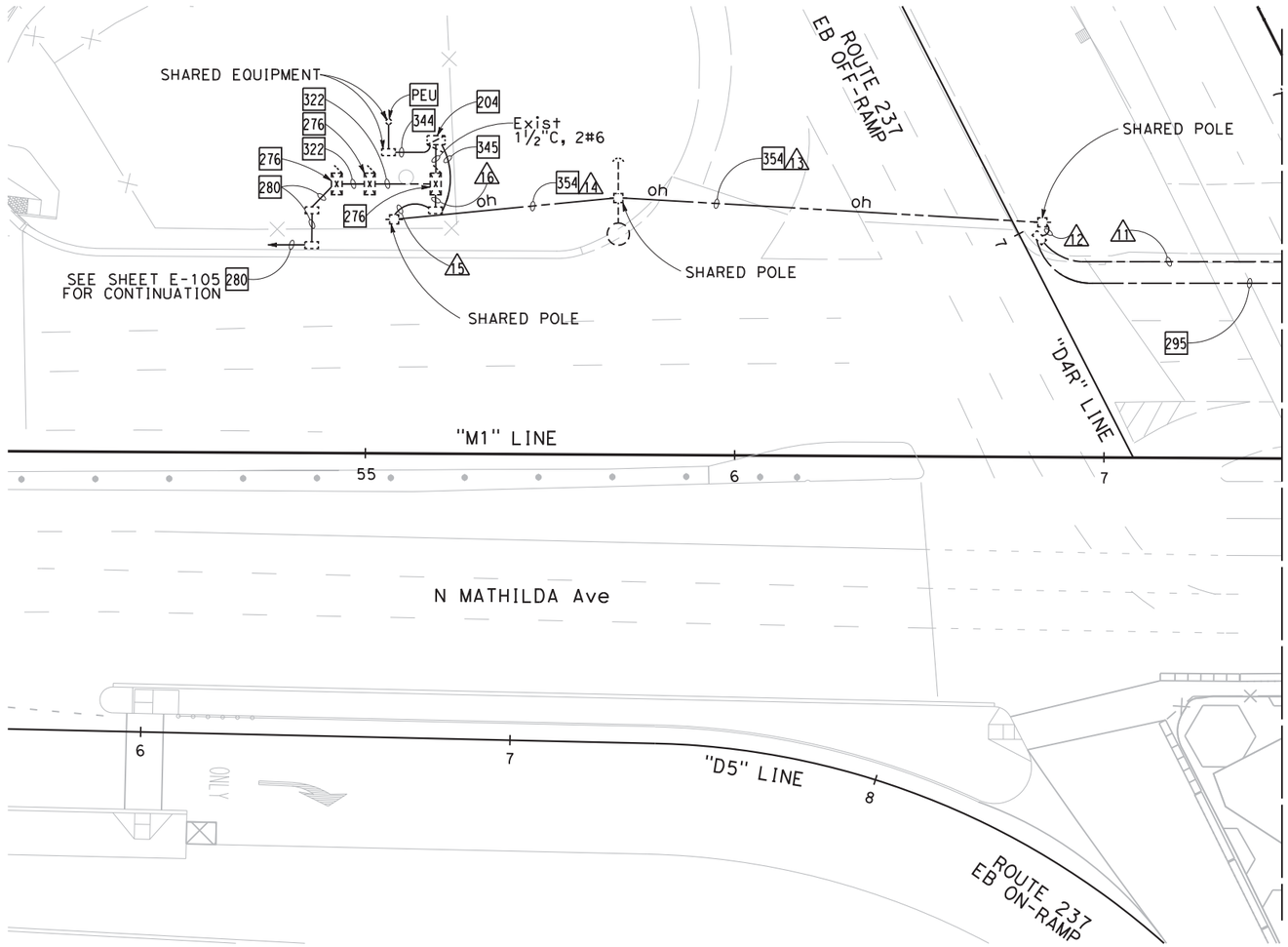

FOR NOTES AND LEGEND, SEE SHEETS E-46 TO E-48

CITY STREET LOCATION 7 (PROPOSED)

APPROVED FOR ELECTRICAL WORK ONLY

TEMPORARY SIGNAL AND LIGHTING (CITY)
(STAGE 1 PHASE 3)

SCALE: 1" = 20'

E-111

STATE OF CALIFORNIA - DEPARTMENT OF TRANSPORTATION
Caltrans

CONSULTANT FUNCTIONAL SUPERVISOR: TIMOTHY J. LEE
CALCULATED-DESIGNED BY: MENG YANG
CHECKED BY: DAN YAU
REVISED BY | DATE REVISED

LAST REVISION: 00-00-00
DATE PLOTTED => $DATE
TIME PLOTTED => $TIME

BORDER LAST REVISED 7/2/2010
USERNAME => $USER
DGN FILE => $REQUEST
RELATIVE BORDER SCALE IS IN INCHES 0 1 2 3
UNIT 0712
PROJECT NUMBER & PHASE 0413000204

Dist	COUNTY	ROUTE	POST MILES TOTAL PROJECT	SHEET No.	TOTAL SHEETS
04	SCL	101,237	45.2/45.8, 2.7/3.3	493	736

6-13-18
REGISTERED CIVIL ENGINEER DATE

6-20-18
PLANS APPROVAL DATE

REGISTERED PROFESSIONAL ENGINEER
KIN Y. CHAN
No. 55391
Exp. 12/31/18
CIVIL
STATE OF CALIFORNIA

THE STATE OF CALIFORNIA OR ITS OFFICERS OR AGENTS SHALL NOT BE RESPONSIBLE FOR THE ACCURACY OR COMPLETENESS OF SCANNED COPIES OF THIS PLAN SHEET.

Y&C TRANSPORTATION CONSULTANTS, INC.
3250 Ramos Circle
Sacramento, CA 95827

VTA
3331 N First St
Building B
San Jose, CA 95134

NOTES:

1. FOR ACCURATE RIGHT OF WAY DATA, CONTACT RIGHT OF WAY ENGINEERING AT THE DISTRICT OFFICE.
2. FOR SCHEDULES, SEE SHEET E-113.

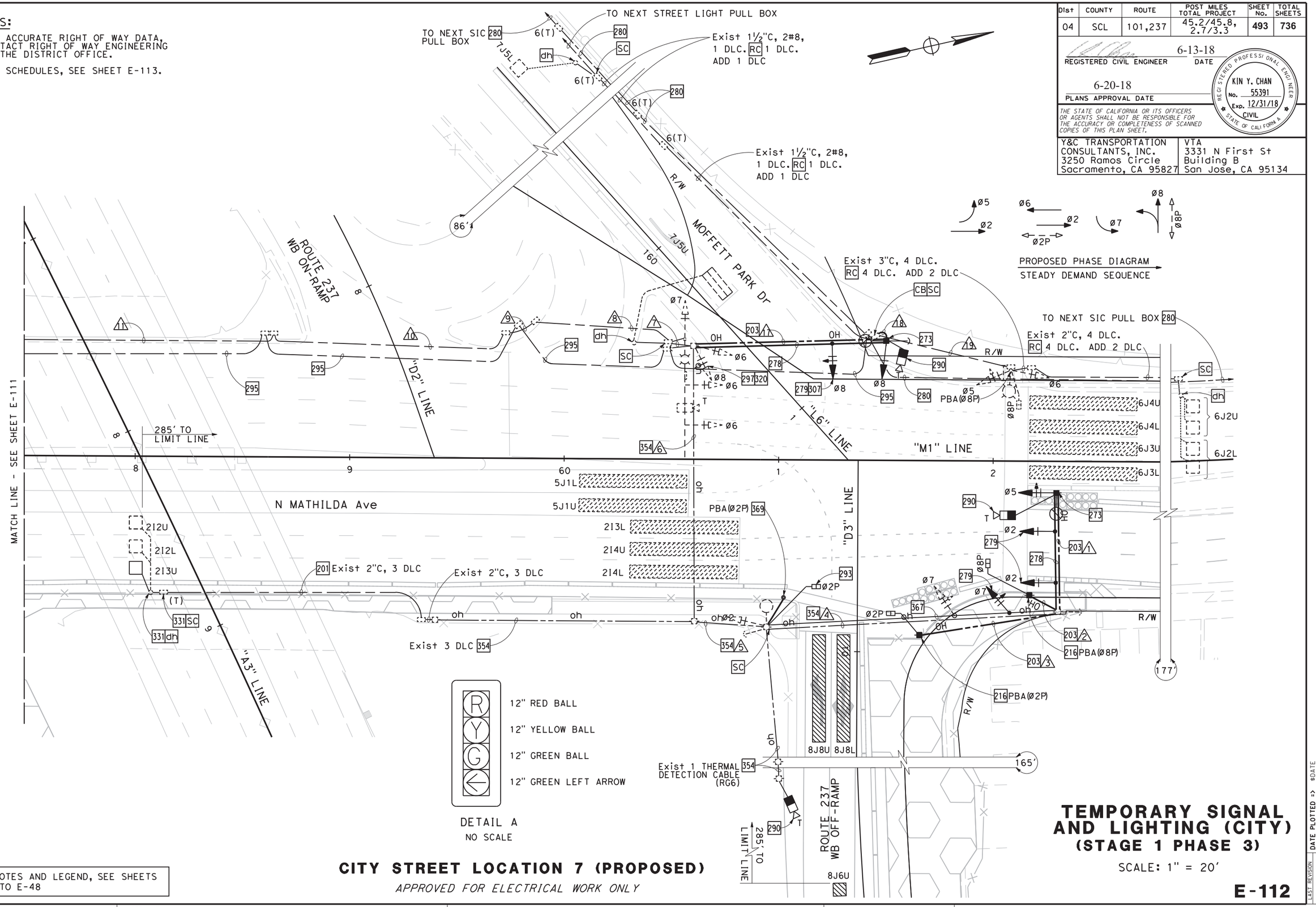

CITY STREET LOCATION 7 (PROPOSED)

APPROVED FOR ELECTRICAL WORK ONLY

FOR NOTES AND LEGEND, SEE SHEETS E-46 TO E-48

TEMPORARY SIGNAL AND LIGHTING (CITY)
(STAGE 1 PHASE 3)

SCALE: 1" = 20'

E-112

STATE OF CALIFORNIA - DEPARTMENT OF TRANSPORTATION
CONSULTANT FUNCTIONAL SUPERVISOR: TIMOTHY J. LEE
CALCULATED-DESIGNED BY: MENG YANG
CHECKED BY: DAN YAU
REVISED BY
DATE REVISED
LAST REVISION 00-00-00
DATE PLOTTED => $DATE
TIME PLOTTED => $TIME

BORDER LAST REVISED 7/2/2010
USERNAME => $USER
DGN FILE => $REQUEST
RELATIVE BORDER SCALE IS IN INCHES 0 1 2 3
UNIT 0712
PROJECT NUMBER & PHASE 0413000204

Dist	COUNTY	ROUTE	POST MILES TOTAL PROJECT	SHEET No.	TOTAL SHEETS
04	SCL	101,237	45.2/45.8, 2.7/3.3	494	736

6-13-18
REGISTERED CIVIL ENGINEER DATE

REGISTERED PROFESSIONAL ENGINEER
KIN Y. CHAN
No. 55391
Exp. 12/31/18
CIVIL
STATE OF CALIFORNIA

6-20-18
PLANS APPROVAL DATE

THE STATE OF CALIFORNIA OR ITS OFFICERS OR AGENTS SHALL NOT BE RESPONSIBLE FOR THE ACCURACY OR COMPLETENESS OF SCANNED COPIES OF THIS PLAN SHEET.

Y&C TRANSPORTATION CONSULTANTS, INC. 3250 Ramos Circle Sacramento, CA 95827	VTA 3331 N First St Building B San Jose, CA 95134

SCHEDULES: (FOR SHEET E-111 AND E-112)

CONDUCTOR AND CONDUIT SCHEDULE

CONDUCTOR SCHEDULE	No. OF CONDUCTORS IN CONDUIT RUN NUMBER																		
	/1	/2	/3	/4	/5	/6	/7	/8	/9	/10	/11	/12	/13	/14	/15	/16	/17	/18	/19
No. 14 CONDUCTORS																			
Ø2	3			3	3	3	3	3	3	3	3	3	3	3	3	3			
Ø3								3-	3-	3-	3-	3-	3-	3-	3-	3-			
Ø5	3			3	3	3	3+ 3	6	6	6	6	6	6	6	6	6	3	3	3
Ø6							3+	3	3	3	3	3	3	3	3	3	3	3	3
Ø7				3	3	3	3	3	3	3	3	3	3	3	3	3			
Ø8				3-	3-	3-	3	3- 3	3-	3-	3-	3-	3-	3-	3-	3-	3		
Ø2P			2	2	2	2	2	2	2	2	2	2	2	2	2	2			
Ø8P		2		2	2	2	2+ 2	4	4	4	4	4	4	4	4	4	2	2	2
PBA Ø2P			1	1	1	1	1	1	1	1	1	1	1	1	1	1			
PBA Ø8P		1		1	1	1	1+ 1	2	2	2	2	2	2	2	2	2	1	1	1
PBA COMMON		1	1	1	1	1	1+ 1	2	2	2	2	2	2	2	2	2	1	1	1
SPARES	3	3	3	3	3	3	3+ 3	6	6	6	6	6	6	6	6	6	3	3	3
TOTAL No. 14	9	7	7	19	19	19	35	35	35	35	35	35	35	35	35	35	16	13	13
No. 8 CONDUCTORS																			
IISNS				2-	2-	2-	2-	2	2	2	2	2	2	2	2	2			
LIGHTING	2			2	2	2	2	2	2	2	2	2	2	2	2	2	2	2	2
SIGNAL NEUTRAL	1			1	1	1	1	2	2	2	2	2	2	2	2	2	1	1	1
TOTAL No. 8	3			3	3	3	3	6	6	6	6	6	6	6	6	6	3	3	3
DETECTOR CABLES (DLC)																			
2I2U						1	1	1	1	1	1	1	1	1	1	1			
2I2L						1	1	1	1	1	1	1	1	1	1	1			
2I3U						1	1	1	1	1	1	1	1	1	1	1			
6J2U							1+	1*	1*	1*	1*	1*	1*	1*	1*	1*	1	1	1*
6J2L							1+	1*	1*	1*	1*	1*	1*	1*	1*	1*	1	1	1*
7J5U								1	1	1	1	1	1	1	1	1			
7J5L							1+	1*	1*	1*	1*	1*	1*	1*	1*	1*	1	1	
TOTAL DETECTOR CABLES						3	3	7	7	7	7	7	7	7	7	7	3	2	2
THERMAL VEHICLE DETECTION CABLE (RG6)	1			1*	1*	1*	1*	2*	2*	2*	2*	2*	2*	2*	2*	2*	1		
SIC												2	2	2	2	2			
CONDUIT SIZE (INCHES)	OH	OH	OH	OH	OH	OH	3	2-3"	2-3"	2-3"	2-3"	4	OH	OH	4	2-3"	OH	3	3
NEW/EXISTING CONDUIT	N	N	N	E	E	E	E	E	E	E	E	E	E	E	E	E	N	N	E
% FILL							26	19	19	19	19	24			24	19		8	8

- REMOVE Exist CONDUCTOR(S)/CABLE(S).
+ ADD NEW CONDUCTOR(S)/CABLE(S).
* REMOVE Exist CONDUCTOR(S)/CABLE(S). ADD NEW CONDUCTOR(S)/CABLE(S).

FOR NOTES AND LEGEND, SEE SHEETS E-46 TO E-48

TEMPORARY SIGNAL AND LIGHTING (CITY)
(STAGE 1 PHASE 3)

CITY STREET LOCATION 7 (PROPOSED)

APPROVED FOR ELECTRICAL WORK ONLY

E-113

REVISED BY / DATE REVISED: MENG YANG / DAN YAU
CALCULATED-DESIGNED BY / CHECKED BY
CONSULTANT FUNCTIONAL SUPERVISOR: TIMOTHY J. LEE
STATE OF CALIFORNIA - DEPARTMENT OF TRANSPORTATION

LAST REVISION 00-00-00 | DATE PLOTTED => $DATE | TIME PLOTTED => $TIME

BORDER LAST REVISED 7/2/2010 | USERNAME => $USER | DGN FILE => $REQUEST | RELATIVE BORDER SCALE IS IN INCHES 0 1 2 3 | UNIT 0712 | PROJECT NUMBER & PHASE 0413000204

NOTES:

1. FOR ACCURATE RIGHT OF WAY DATA, CONTACT RIGHT OF WAY ENGINEERING AT THE DISTRICT OFFICE.
2. FOR SCHEDULE, SEE SHEET E-115.

Dist	COUNTY	ROUTE	POST MILES TOTAL PROJECT	SHEET No.	TOTAL SHEETS
04	SCL	101,237	45.2/45.8, 2.7/3.3	495	736

6-13-18
REGISTERED CIVIL ENGINEER — DATE

KIN Y. CHAN No. 55391 Exp. 12/31/18 CIVIL — REGISTERED PROFESSIONAL ENGINEER — STATE OF CALIFORNIA

6-20-18
PLANS APPROVAL DATE

THE STATE OF CALIFORNIA OR ITS OFFICERS OR AGENTS SHALL NOT BE RESPONSIBLE FOR THE ACCURACY OR COMPLETENESS OF SCANNED COPIES OF THIS PLAN SHEET.

Y&C TRANSPORTATION CONSULTANTS, INC.
3250 Ramos Circle
Sacramento, CA 95827

VTA
3331 N First St
Building B
San Jose, CA 95134

EXISTING PHASE DIAGRAM (NO CHANGE)
STEADY DEMAND SEQUENCE
GPS EVUD

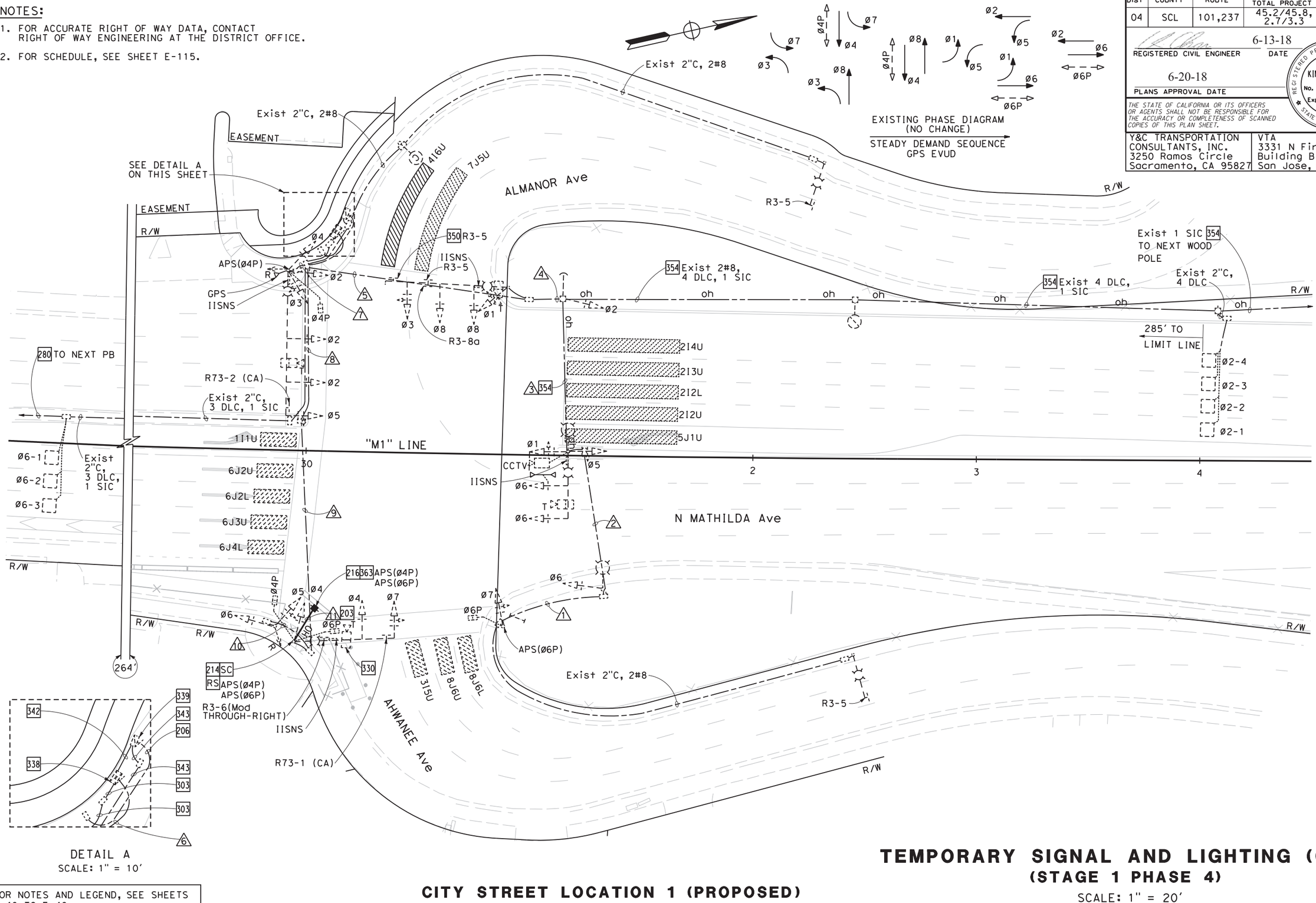

DETAIL A
SCALE: 1" = 10'

FOR NOTES AND LEGEND, SEE SHEETS E-46 TO E-48

CITY STREET LOCATION 1 (PROPOSED)

APPROVED FOR ELECTRICAL WORK ONLY

TEMPORARY SIGNAL AND LIGHTING (CITY)
(STAGE 1 PHASE 4)

SCALE: 1" = 20'

E-114

MENG YANG — DESIGNED BY
DAN YAU — CALCULATED BY
TIMOTHY J. LEE — CONSULTANT FUNCTIONAL SUPERVISOR
CHECKED BY
REVISED BY
DATE REVISED

STATE OF CALIFORNIA - DEPARTMENT OF TRANSPORTATION
Caltrans

LAST REVISION 00-00-00
DATE PLOTTED => $DATE
TIME PLOTTED => $TIME

BORDER LAST REVISED 7/2/2010
USERNAME => $USER
DGN FILE => $REQUEST
RELATIVE BORDER SCALE IS IN INCHES 0 1 2 3
UNIT 0712
PROJECT NUMBER & PHASE 0413000204

SCHEDULE: (FOR SHEET E-114)

CONDUCTOR AND CONDUIT SCHEDULE

CONDUCTOR SCHEDULE	No. OF CONDUCTORS IN CONDUIT RUN NUMBER										
	1	2	3	4	5	6	7	8	9	10	11
No. 14 CONDUCTORS											
Ø1			3	3	3	3					
Ø2				3	3	6	3				
Ø3					3	6	3				
Ø4						3	3	3	3		
Ø5			3	3	3	6	3	3	3	3	
Ø6		3	3	3	3	6		3	3	3	
Ø7	3	3	3	3	3	6		3	3		
Ø8					3	3					
Ø4P						2	2	2	2		
Ø6P	2	2	2	2	2	4		2	2		
IISNS			2	2	2		2	2	2		
PEU							3				
SPARES	3	3	3	3	3	6	3	3	3	3	
TOTAL No. 14	8	11	19	22	28	51	22	21	21	9	
No. 12 CONDUCTORS											
APS Ø4P						2	2	2	2		2
APS Ø6P	2	2	2	2	2	4		2	2		2
TOTAL No. 12	2	2	2	2	2	6	2	4	4		4
No. 8 CONDUCTORS											
LIGHTING		2	2	2	2		2	2	2		
SIGNAL NEUTRAL	1	1	1	1	1	1	1	1	1	1	
TOTAL No. 8	1	3	3	3	3	1	3	3	3	1	
DETECTOR CABLES (DLC)											
Ø2				4	4	4					
Ø6						3					
TOTAL DETECTOR CABLES				4	4	7					
THERMAL VEHICLE DETECTION CABLE			1	1	2	4	1	1	1		
CCTV CABLE			1	1	1	1					
GPS EVUC						1	1				
SIC				1	1						
CONDUIT SIZE (INCHES)	2	2	OH	3	2-2"	2-3"	2	2	2	2	OH
NEW/EXISTING CONDUIT	E	E	E	N	E	E	E	E	E	E	N
% FILL	12	14		21	35	25	32	29	29	7	

FOR NOTES AND LEGEND, SEE SHEETS E-46 TO E-48

CITY STREET LOCATION 1 (PROPOSED)

TEMPORARY SIGNAL AND LIGHTING (CITY)
(STAGE 1 PHASE 4)

E-115

Dist	COUNTY	ROUTE	POST MILES TOTAL PROJECT	SHEET No.	TOTAL SHEETS
04	SCL	101,237	45.2/45.8, 2.7/3.3	496	736

6-13-18
REGISTERED CIVIL ENGINEER — DATE

6-20-18
PLANS APPROVAL DATE

REGISTERED PROFESSIONAL ENGINEER
KIN Y. CHAN
No. 55391
Exp. 12/31/18
CIVIL
STATE OF CALIFORNIA

THE STATE OF CALIFORNIA OR ITS OFFICERS OR AGENTS SHALL NOT BE RESPONSIBLE FOR THE ACCURACY OR COMPLETENESS OF SCANNED COPIES OF THIS PLAN SHEET.

Y&C TRANSPORTATION CONSULTANTS, INC.
3250 Ramos Circle
Sacramento, CA 95827

VTA
3331 N First St
Building B
San Jose, CA 95134

REVISED BY | DATE REVISED
MENG YANG | DAN YAU
CALCULATED-DESIGNED BY | CHECKED BY
CONSULTANT FUNCTIONAL SUPERVISOR: TIMOTHY J. LEE
STATE OF CALIFORNIA - DEPARTMENT OF TRANSPORTATION — Caltrans

LAST REVISION 00-00-00 | DATE PLOTTED => $DATE | TIME PLOTTED => $TIME

BORDER LAST REVISED 7/2/2010 | USERNAME => $USER | DGN FILE => $REQUEST | RELATIVE BORDER SCALE IS IN INCHES 0 1 2 3 | UNIT 0712 | PROJECT NUMBER & PHASE 0413000204

NOTES:

FOR ACCURATE RIGHT OF WAY DATA, CONTACT RIGHT OF WAY ENGINEERING AT THE DISTRICT OFFICE.

Dist	COUNTY	ROUTE	POST MILES TOTAL PROJECT	SHEET No.	TOTAL SHEETS
04	SCL	101,237	45.2/45.8, 2.7/3.3	497	736

6-13-18
REGISTERED CIVIL ENGINEER — DATE

KIN Y. CHAN No. 55391 Exp. 12/31/18 CIVIL — REGISTERED PROFESSIONAL ENGINEER — STATE OF CALIFORNIA

6-20-18
PLANS APPROVAL DATE

THE STATE OF CALIFORNIA OR ITS OFFICERS OR AGENTS SHALL NOT BE RESPONSIBLE FOR THE ACCURACY OR COMPLETENESS OF SCANNED COPIES OF THIS PLAN SHEET.

Y&C TRANSPORTATION CONSULTANTS, INC.
3250 Ramos Circle
Sacramento, CA 95827

VTA
3331 N First St
Building B
San Jose, CA 95134

Ø6 Ø6 Ø2 Ø1 Ø2P Ø4

EXISTING PHASE DIAGRAM

STEADY DEMAND SEQUENCE

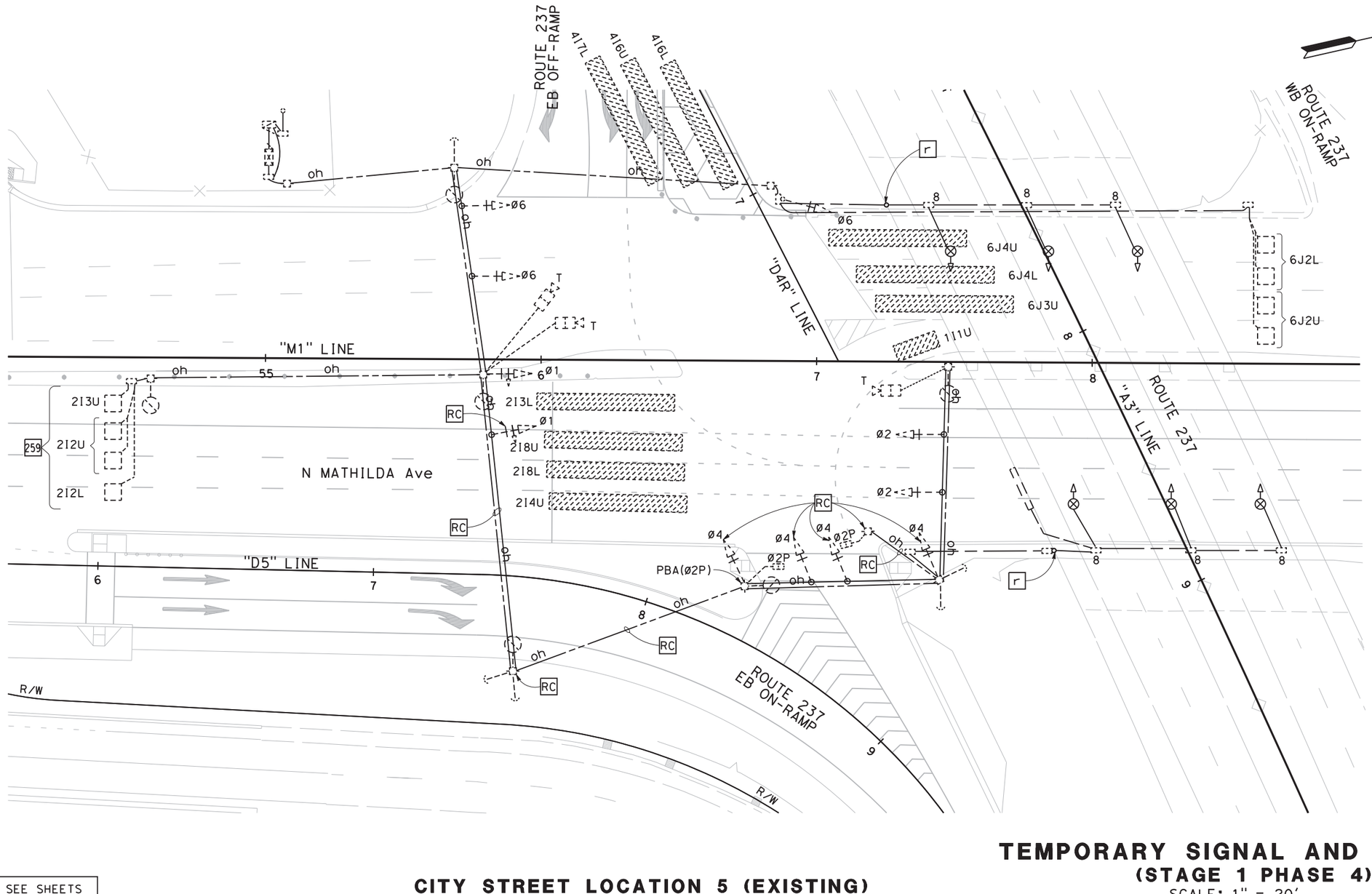

FOR NOTES AND LEGEND, SEE SHEETS E-46 TO E-48

CITY STREET LOCATION 5 (EXISTING)

APPROVED FOR ELECTRICAL WORK ONLY

TEMPORARY SIGNAL AND LIGHTING (STAGE 1 PHASE 4)

SCALE: 1" = 20'

E-116

STATE OF CALIFORNIA - DEPARTMENT OF TRANSPORTATION — Caltrans®

CONSULTANT FUNCTIONAL SUPERVISOR: TIMOTHY J. LEE

CALCULATED-DESIGNED BY: MENG YANG

CHECKED BY: DAN YAU

REVISED BY | DATE REVISED

LAST REVISION: 00-00-00 — DATE PLOTTED => $DATE — TIME PLOTTED => $TIME

BORDER LAST REVISED 7/2/2010 — USERNAME => $USER — DGN FILE => $REQUEST — RELATIVE BORDER SCALE IS IN INCHES 0 1 2 3 — UNIT 0712 — PROJECT NUMBER & PHASE 0413000204

NOTES:

1. FOR ACCURATE RIGHT OF WAY DATA, CONTACT RIGHT OF WAY ENGINEERING AT THE DISTRICT OFFICE.
2. FOR SCHEDULES, SEE SHEET E-118.

Dist	COUNTY	ROUTE	POST MILES TOTAL PROJECT	SHEET No.	TOTAL SHEETS
04	SCL	101,237	45.2/45.8, 2.7/3.3	498	736

6-13-18
REGISTERED CIVIL ENGINEER DATE

KIN Y. CHAN
No. 55391
Exp. 12/31/18
CIVIL
REGISTERED PROFESSIONAL ENGINEER
STATE OF CALIFORNIA

6-20-18
PLANS APPROVAL DATE

THE STATE OF CALIFORNIA OR ITS OFFICERS OR AGENTS SHALL NOT BE RESPONSIBLE FOR THE ACCURACY OR COMPLETENESS OF SCANNED COPIES OF THIS PLAN SHEET.

Y&C TRANSPORTATION CONSULTANTS, INC.
3250 Ramos Circle
Sacramento, CA 95827

VTA
3331 N First St
Building B
San Jose, CA 95134

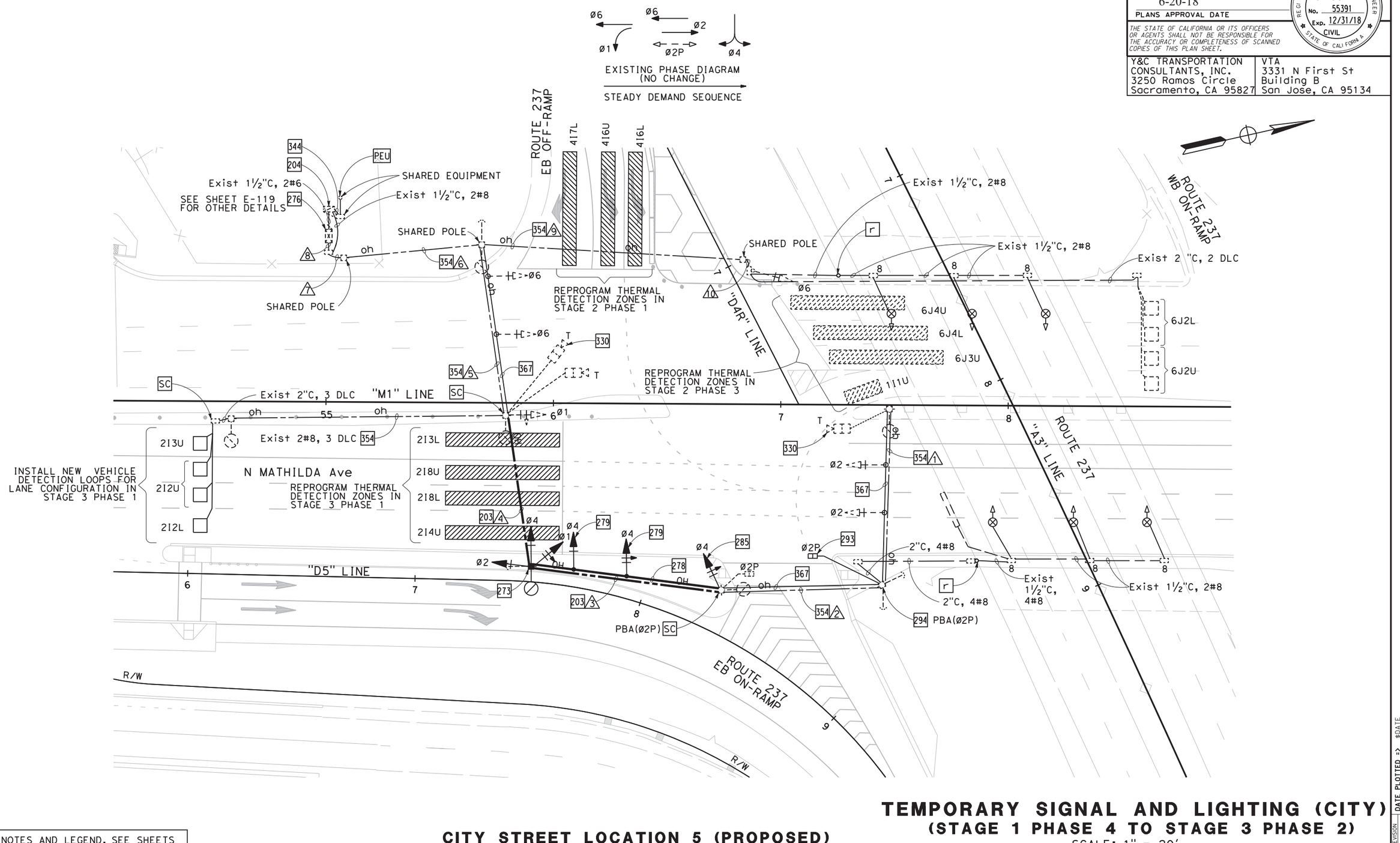

FOR NOTES AND LEGEND, SEE SHEETS E-46 TO E-48

CITY STREET LOCATION 5 (PROPOSED)

APPROVED FOR ELECTRICAL WORK ONLY

TEMPORARY SIGNAL AND LIGHTING (CITY)

(STAGE 1 PHASE 4 TO STAGE 3 PHASE 2)

SCALE: 1" = 20'

E-117

STATE OF CALIFORNIA - DEPARTMENT OF TRANSPORTATION
Caltrans
CONSULTANT FUNCTIONAL SUPERVISOR: TIMOTHY J. LEE
CALCULATED-DESIGNED BY: MENG YANG
CHECKED BY: DAN YAU
REVISED BY
DATE REVISED
LAST REVISION $DATE $TIME
DATE PLOTTED => 00-00-00
TIME PLOTTED =>

BORDER LAST REVISED 7/2/2010
USERNAME => $USER
DGN FILE => $REQUEST
RELATIVE BORDER SCALE IS IN INCHES 0 1 2 3
UNIT 0712
PROJECT NUMBER & PHASE 0413000204

SCHEDULES: (FOR SHEET E-117)

CONDUCTOR AND CONDUIT SCHEDULE

CONDUCTOR SCHEDULE	No. OF CONDUCTORS IN CONDUIT RUN NUMBER 1	2	3	4	5	6	7	8	9	10
No. 14 CONDUCTORS										
Ø1				3	3	3	3	3		
Ø2	3	3	3	3	3	3	3	3		
Ø4		3	3	3	3	3	3	3		
Ø6					3	3	3	3	3	3
Ø2P		2	2	2	2	2	2	2		
PBA Ø2P		1	1	1	1	1	1	1		
PBA COMMON		1	1	1	1	1	1	1		
SPARES	3	3	3	3	3	3	6	6	3	3
TOTAL No. 14	6	13	13	16	19	22	22	22	6	6
No. 8 CONDUCTORS										
LIGHTING	2	2	2	2	2	2	2	2	2	2
SIGN ILLUMINATION	2	2	2	2	2	2	2	2		
SIGNAL NEUTRAL	1	1	1	1	1	1	1	1	1	1
TOTAL No. 8	5	5	5	5	5	5	5	5	3	3
DETECTOR CABLES (DLC)										
1I1U										
2I2U				1	1	1	1			
2I2L				1	1	1	1			
2I3U				1	1	1	1			
2I3L										
2I4U										
2I4L										
2I8U										
2I8L										
4I6U										
4I6L										
4I7U										
4I7L										
6J2U					1	1	1	1	1	1
6J2L					1	1	1	1	1	1
6J3U										
6J3L										
6J4U										
6J4L										
TOTAL DETECTOR CABLES				3	5	5	5	2	2	2
THERMAL VEHICLE DETECTION CABLE	1+	1	1	1	3	3	3	3		
CONDUIT SIZE (INCHES)	OH	OH	OH	OH	OH	OH	4	2-3"	OH	3
NEW/EXISTING CONDUIT	E	E	N	N	E	E	E	E	E	E
% FILL							15	16		6

- REMOVE Exist CONDUCTOR(S)/CABLE(S).
+ ADD NEW CONDUCTOR(S)/CABLE(S).

FOR NOTES AND LEGEND, SEE SHEETS E-46 TO E-48

Dist	COUNTY	ROUTE	POST MILES TOTAL PROJECT	SHEET No.	TOTAL SHEETS
04	SCL	101,237	45.2/45.8, 2.7/3.3	499	736

6-13-18
REGISTERED CIVIL ENGINEER — DATE

KIN Y. CHAN
No. 55391
Exp. 12/31/18
CIVIL
REGISTERED PROFESSIONAL ENGINEER
STATE OF CALIFORNIA

6-20-18
PLANS APPROVAL DATE

THE STATE OF CALIFORNIA OR ITS OFFICERS OR AGENTS SHALL NOT BE RESPONSIBLE FOR THE ACCURACY OR COMPLETENESS OF SCANNED COPIES OF THIS PLAN SHEET.

Y&C TRANSPORTATION CONSULTANTS, INC.
3250 Ramos Circle
Sacramento, CA 95827

VTA
3331 N First St
Building B
San Jose, CA 95134

REVISED BY | DATE REVISED
MENG YANG | DAN YAU
CALCULATED-DESIGNED BY | CHECKED BY
CONSULTANT FUNCTIONAL SUPERVISOR: TIMOTHY J. LEE
STATE OF CALIFORNIA - DEPARTMENT OF TRANSPORTATION — Caltrans

TEMPORARY SIGNAL AND LIGHTING (CITY)
(STAGE 1 PHASE 4 TO STAGE 3 PHASE 2)

CITY STREET LOCATION 5 (PROPOSED)
APPROVED FOR ELECTRICAL WORK ONLY

E-118

LAST REVISION 00-00-00 | DATE PLOTTED => $DATE | TIME PLOTTED => $TIME

BORDER LAST REVISED 7/2/2010 | USERNAME => $USER | DGN FILE => $REQUEST | RELATIVE BORDER SCALE IS IN INCHES 0 1 2 3 | UNIT 0712 | PROJECT NUMBER & PHASE 0413000204

NOTES:

1. FOR ACCURATE RIGHT OF WAY DATA, CONTACT RIGHT OF WAY ENGINEERING AT THE DISTRICT OFFICE.
2. FOR SCHEDULES, SEE SHEET E-121.

Dist	COUNTY	ROUTE	POST MILES TOTAL PROJECT	SHEET No.	TOTAL SHEETS
04	SCL	101,237	45.2/45.8, 2.7/3.3	500	736

6-13-18
REGISTERED CIVIL ENGINEER — DATE

6-20-18
PLANS APPROVAL DATE

REGISTERED PROFESSIONAL ENGINEER
KIN Y. CHAN
No. 55391
Exp. 12/31/18
CIVIL
STATE OF CALIFORNIA

THE STATE OF CALIFORNIA OR ITS OFFICERS OR AGENTS SHALL NOT BE RESPONSIBLE FOR THE ACCURACY OR COMPLETENESS OF SCANNED COPIES OF THIS PLAN SHEET.

Y&C TRANSPORTATION CONSULTANTS, INC.
3250 Ramos Circle
Sacramento, CA 95827

VTA
3331 N First St
Building B
San Jose, CA 95134

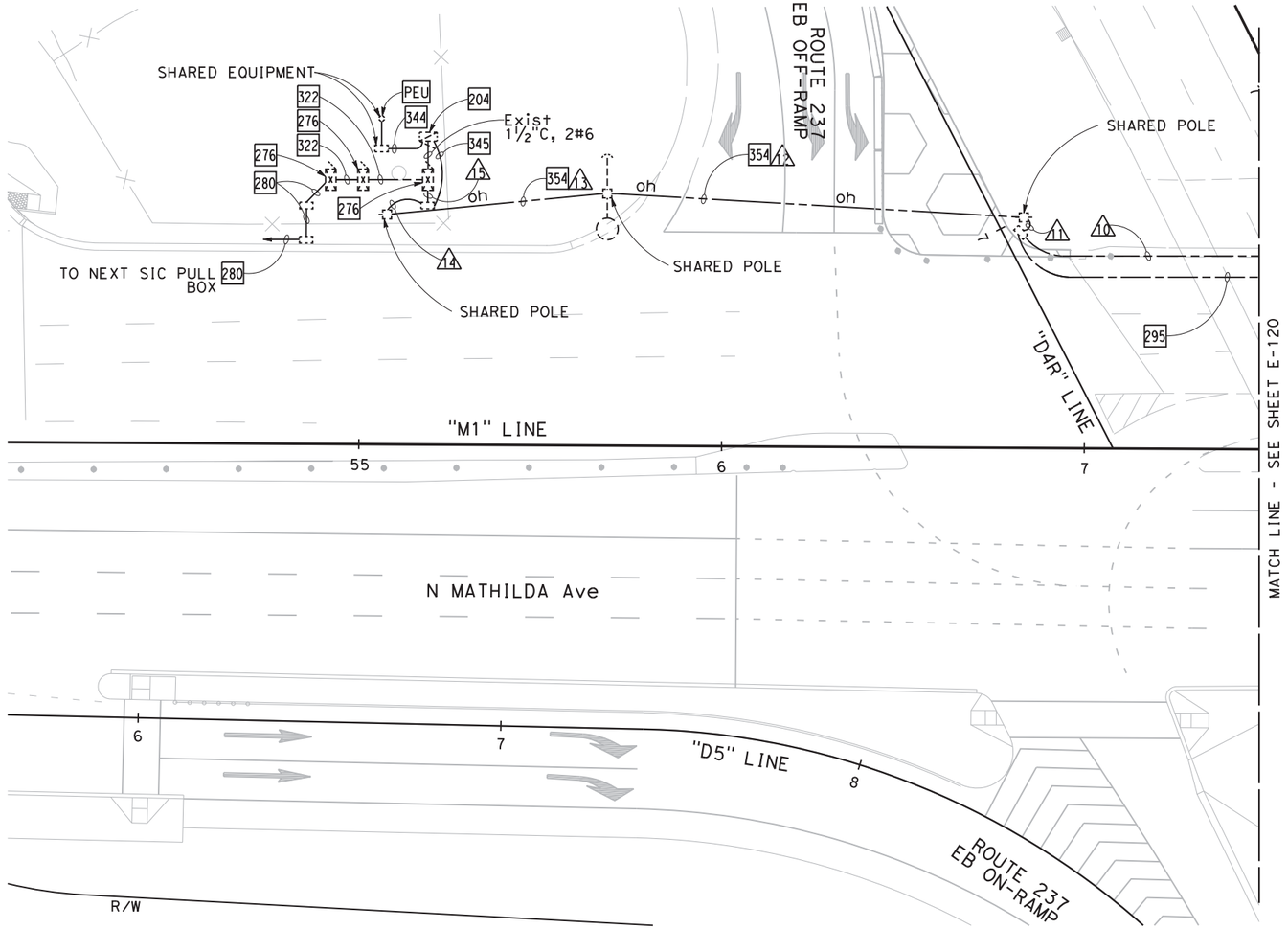

FOR NOTES AND LEGEND, SEE SHEETS E-46 TO E-48

CITY STREET LOCATION 7 (PROPOSED)

APPROVED FOR ELECTRICAL WORK ONLY

TEMPORARY SIGNAL AND LIGHTING (STAGE 1 PHASE 4)

SCALE: 1" = 20'

E-119

REVISED BY	MENG YANG
DATE REVISED	DAN YAU
CALCULATED-DESIGNED BY	
CHECKED BY	
CONSULTANT FUNCTIONAL SUPERVISOR	TIMOTHY J.LEE

STATE OF CALIFORNIA - DEPARTMENT OF TRANSPORTATION
Caltrans

LAST REVISION 00-00-00
DATE PLOTTED => $DATE
TIME PLOTTED => $TIME

BORDER LAST REVISED 7/2/2010
USERNAME => $USER
DGN FILE => $REQUEST
RELATIVE BORDER SCALE IS IN INCHES 0 1 2 3
UNIT 0712
PROJECT NUMBER & PHASE 0413000204

NOTES:

1. FOR ACCURATE RIGHT OF WAY DATA, CONTACT RIGHT OF WAY ENGINEERING AT THE DISTRICT OFFICE.
2. FOR SCHEDULES, SEE SHEET E-121.

Dist	COUNTY	ROUTE	POST MILES TOTAL PROJECT	SHEET No.	TOTAL SHEETS
04	SCL	101,237	45.2/45.8, 2.7/3.3	501	736

REGISTERED CIVIL ENGINEER 6-13-18 DATE

6-20-18 PLANS APPROVAL DATE

REGISTERED PROFESSIONAL ENGINEER KIN Y. CHAN No. 55391 Exp. 12/31/18 CIVIL STATE OF CALIFORNIA

THE STATE OF CALIFORNIA OR ITS OFFICERS OR AGENTS SHALL NOT BE RESPONSIBLE FOR THE ACCURACY OR COMPLETENESS OF SCANNED COPIES OF THIS PLAN SHEET.

Y&C TRANSPORTATION CONSULTANTS, INC.
3250 Ramos Circle
Sacramento, CA 95827

VTA
3331 N First St
Building B
San Jose, CA 95134

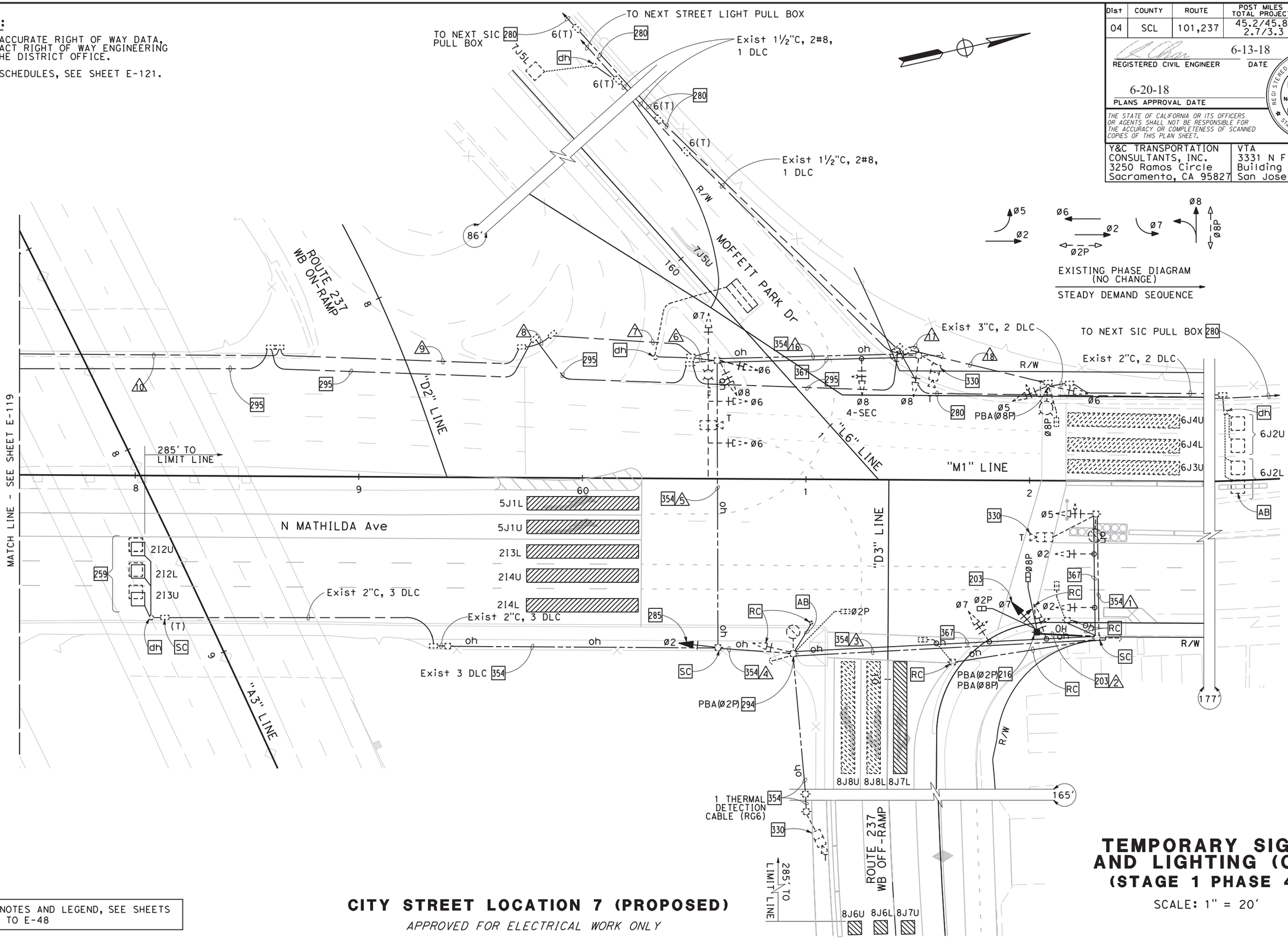

FOR NOTES AND LEGEND, SEE SHEETS E-46 TO E-48

CITY STREET LOCATION 7 (PROPOSED)

APPROVED FOR ELECTRICAL WORK ONLY

TEMPORARY SIGNAL AND LIGHTING (CITY)
(STAGE 1 PHASE 4)

SCALE: 1" = 20'

E-120

STATE OF CALIFORNIA - DEPARTMENT OF TRANSPORTATION
Caltrans

CONSULTANT FUNCTIONAL SUPERVISOR: TIMOTHY J. LEE
CALCULATED-DESIGNED BY: MENG YANG
CHECKED BY: DAN YAU
REVISED BY
DATE REVISED

LAST REVISION 00-00-00
DATE PLOTTED => $DATE
TIME PLOTTED => $TIME

Dist	COUNTY	ROUTE	POST MILES TOTAL PROJECT	SHEET No.	TOTAL SHEETS
04	SCL	101,237	45.2/45.8, 2.7/3.3	502	736

REGISTERED CIVIL ENGINEER — DATE 6-13-18

PLANS APPROVAL DATE 6-20-18

REGISTERED PROFESSIONAL ENGINEER — KIN Y. CHAN — No. 55391 — Exp. 12/31/18 — CIVIL — STATE OF CALIFORNIA

THE STATE OF CALIFORNIA OR ITS OFFICERS OR AGENTS SHALL NOT BE RESPONSIBLE FOR THE ACCURACY OR COMPLETENESS OF SCANNED COPIES OF THIS PLAN SHEET.

Y&C TRANSPORTATION CONSULTANTS, INC.
3250 Ramos Circle
Sacramento, CA 95827

VTA
3331 N First St
Building B
San Jose, CA 95134

REVISED BY | DATE REVISED

MENG YANG | DAN YAU

CALCULATED-DESIGNED BY | CHECKED BY

CONSULTANT FUNCTIONAL SUPERVISOR: TIMOTHY J. LEE

STATE OF CALIFORNIA - DEPARTMENT OF TRANSPORTATION — Caltrans

SCHEDULES: (FOR SHEET E-119 AND E-120)

CONDUCTOR AND CONDUIT SCHEDULE

CONDUCTOR SCHEDULE	No. OF CONDUCTORS — CONDUIT RUN NUMBER																	
	/1	/2	/3	/4	/5	/6	/7	/8	/9	/10	/11	/12	/13	/14	/15	/16	/17	/18
No. 14 CONDUCTORS																		
Ø2	3		3	3	3	3	3	3	3	3	3	3	3	3				
Ø5	3		3	3	3	6	6	6	6	6	6	6	6	6	6	3	3	3
Ø6						3	3	3	3	3	3	3	3	3	3	3	3	3
Ø7		3	3	3	3	3	3	3	3	3	3	3	3	3	3			
Ø8						3	3	3	3	3	3	3	3	3	3	3		
Ø2P		2	2	2	2	2	2	2	2	2	2	2	2	2	2			
Ø8P		2	2	2	2	4	4	4	4	4	4	4	4	4	4	2	2	2
PBA Ø2P		1	1	1	1	1	1	1	1	1	1	1	1	1	1			
PBA Ø8P		1	1	1	1	2	2	2	2	2	2	2	2	2	2	1	1	1
PBA COMMON		1	1	1	1	2	2	2	2	2	2	2	2	2	2	1	1	1
SPARES	3	3	3	3	3	6	6	6	6	6	6	6	6	6	6	3	3	3
TOTAL No. 14	9	13	19	19	19	35	35	35	35	35	35	35	35	35	35	16	13	13
No. 8 CONDUCTORS																		
IISNS							2	2	2	2	2	2	2	2	2			
LIGHTING	2		2	2	2	2	2	2	2	2	2	2	2	2	2	2	2	2
SIGNAL NEUTRAL	1		1	1	1	1	2	2	2	2	2	2	2	2	2	1	1	1
TOTAL No. 8	3		3	3	3	3	6	6	6	6	6	6	6	6	6	3	3	3
DETECTOR CABLES (DLC)																		
2I2U						1	1	1	1	1	1	1	1	1	1			
2I2L						1	1	1	1	1	1	1	1	1	1			
2I3U						1	1	1	1	1	1	1	1	1	1			
6J2U							1	1	1	1	1	1	1	1	1	1	1	1
6J2L							1	1	1	1	1	1	1	1	1	1	1	1
7J5U								1	1	1	1	1	1	1	1			
7J5L							1	1	1	1	1	1	1	1	1	1	1	
TOTAL DETECTOR CABLES						3	3	7	7	7	7	7	7	7	7	3	2	2
THERMAL VEHICLE DETECTION CABLE (RG6)	1		1	2	2	3	4	4	4	4	4	4	4	4	4	1		
SIC											2	2	2	2	2			
CONDUIT SIZE (INCHES)	OH	OH	OH	OH	OH	3	2-3"	2-3"	2-3"	2-3"	4	OH	OH	4	2-3"	OH	3	3
NEW/EXISTING CONDUIT	E	N	E	E	E	E	E	E	E	E	E	E	E	E	E	E	E	E
% FILL						26	19	19	19	19	24			24	19		8	8

FOR NOTES AND LEGEND, SEE SHEETS E-46 TO E-48

CITY STREET LOCATION 7 (PROPOSED)

APPROVED FOR ELECTRICAL WORK ONLY

TEMPORARY SIGNAL AND LIGHTING
(STAGE 1 PHASE 4)

E-121

LAST REVISION 00-00-00 | DATE PLOTTED => $DATE | TIME PLOTTED => $TIME

NOTE:

FOR ACCURATE RIGHT OF WAY DATA, CONTACT
RIGHT OF WAY ENGINEERING AT THE DISTRICT OFFICE.

Dist	COUNTY	ROUTE	POST MILES TOTAL PROJECT	SHEET No.	TOTAL SHEETS
04	SCL	101,237	45.2/45.8, 2.7/3.3	503	736

6-13-18
REGISTERED CIVIL ENGINEER — DATE

KIN Y. CHAN
No. 55391
Exp. 12/31/18
CIVIL
REGISTERED PROFESSIONAL ENGINEER
STATE OF CALIFORNIA

6-20-18
PLANS APPROVAL DATE

THE STATE OF CALIFORNIA OR ITS OFFICERS OR AGENTS SHALL NOT BE RESPONSIBLE FOR THE ACCURACY OR COMPLETENESS OF SCANNED COPIES OF THIS PLAN SHEET.

Y&C TRANSPORTATION CONSULTANTS, INC.
3250 Ramos Circle
Sacramento, CA 95827

VTA
3331 N First St
Building B
San Jose, CA 95134

EXISTING PHASE DIAGRAM
STEADY DEMAND SEQUENCE
GPS EVUD

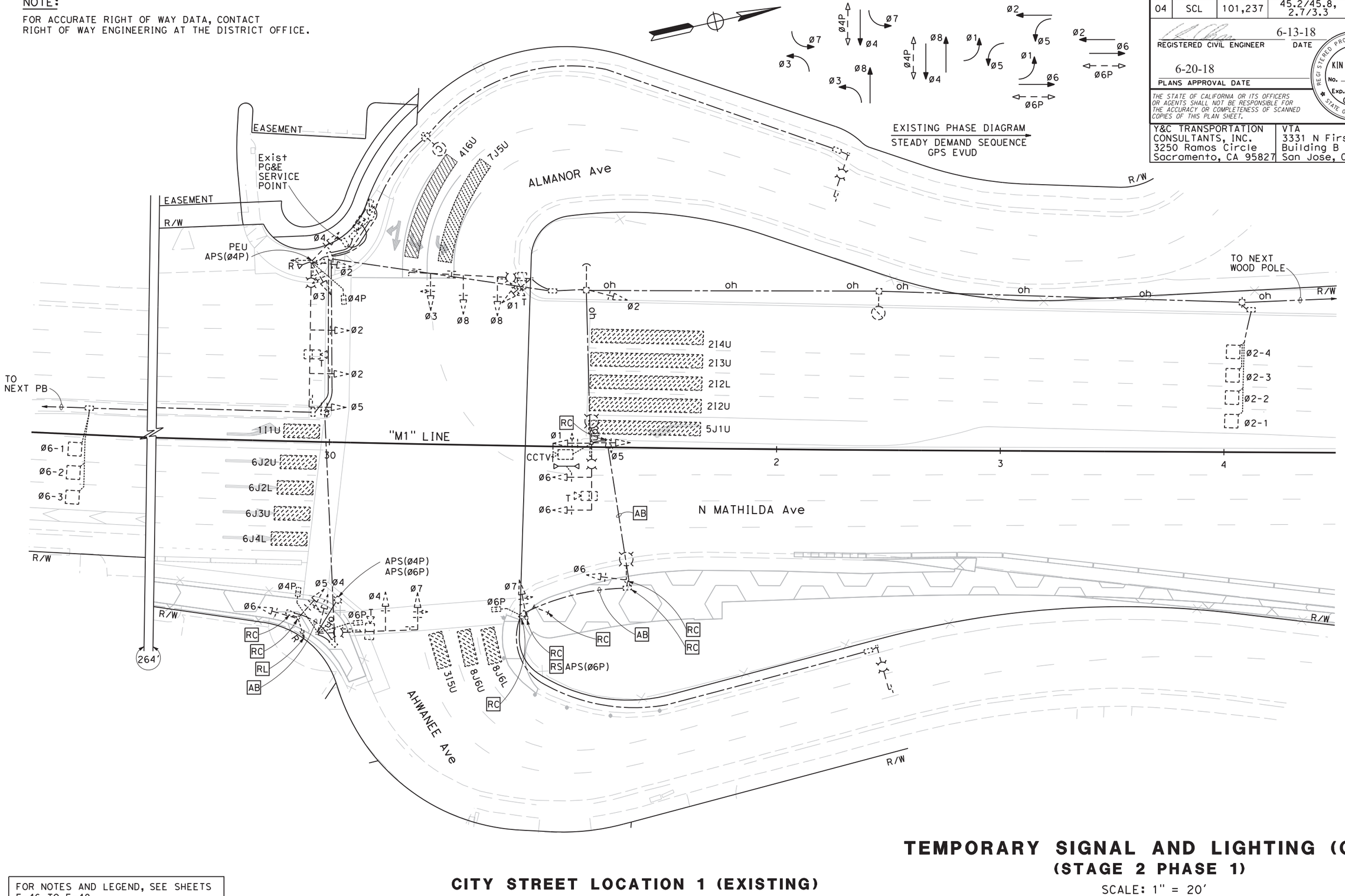

FOR NOTES AND LEGEND, SEE SHEETS E-46 TO E-48

CITY STREET LOCATION 1 (EXISTING)

APPROVED FOR ELECTRICAL WORK ONLY

TEMPORARY SIGNAL AND LIGHTING (CITY)
(STAGE 2 PHASE 1)

SCALE: 1" = 20'

E-122

STATE OF CALIFORNIA - DEPARTMENT OF TRANSPORTATION
CONSULTANT FUNCTIONAL SUPERVISOR: TIMOTHY J. LEE
CALCULATED-DESIGNED BY: MENG YANG
CHECKED BY: DAN YAU
REVISED BY / DATE REVISED

LAST REVISION 00-00-00
DATE PLOTTED => $DATE
TIME PLOTTED => $TIME

BORDER LAST REVISED 7/2/2010
USERNAME => $USER
DGN FILE => $REQUEST
RELATIVE BORDER SCALE IS IN INCHES 0 1 2 3
UNIT 0712
PROJECT NUMBER & PHASE 0413000204

NOTES:

1. FOR ACCURATE RIGHT OF WAY DATA, CONTACT RIGHT OF WAY ENGINEERING AT THE DISTRICT OFFICE.
2. FOR SCHEDULE, SEE SHEET E-124.

Dist	COUNTY	ROUTE	POST MILES TOTAL PROJECT	SHEET No.	TOTAL SHEETS
04	SCL	101,237	45.2/45.8, 2.7/3.3	504	736

6-13-18
REGISTERED CIVIL ENGINEER — DATE

6-20-18
PLANS APPROVAL DATE

KIN Y. CHAN
No. 55391
Exp. 12/31/18
CIVIL
REGISTERED PROFESSIONAL ENGINEER
STATE OF CALIFORNIA

THE STATE OF CALIFORNIA OR ITS OFFICERS OR AGENTS SHALL NOT BE RESPONSIBLE FOR THE ACCURACY OR COMPLETENESS OF SCANNED COPIES OF THIS PLAN SHEET.

Y&C TRANSPORTATION CONSULTANTS, INC.
3250 Ramos Circle
Sacramento, CA 95827

VTA
3331 N First St
Building B
San Jose, CA 95134

EXISTING PHASE DIAGRAM
(NO CHANGE)
STEADY DEMAND SEQUENCE
GPS EVUD

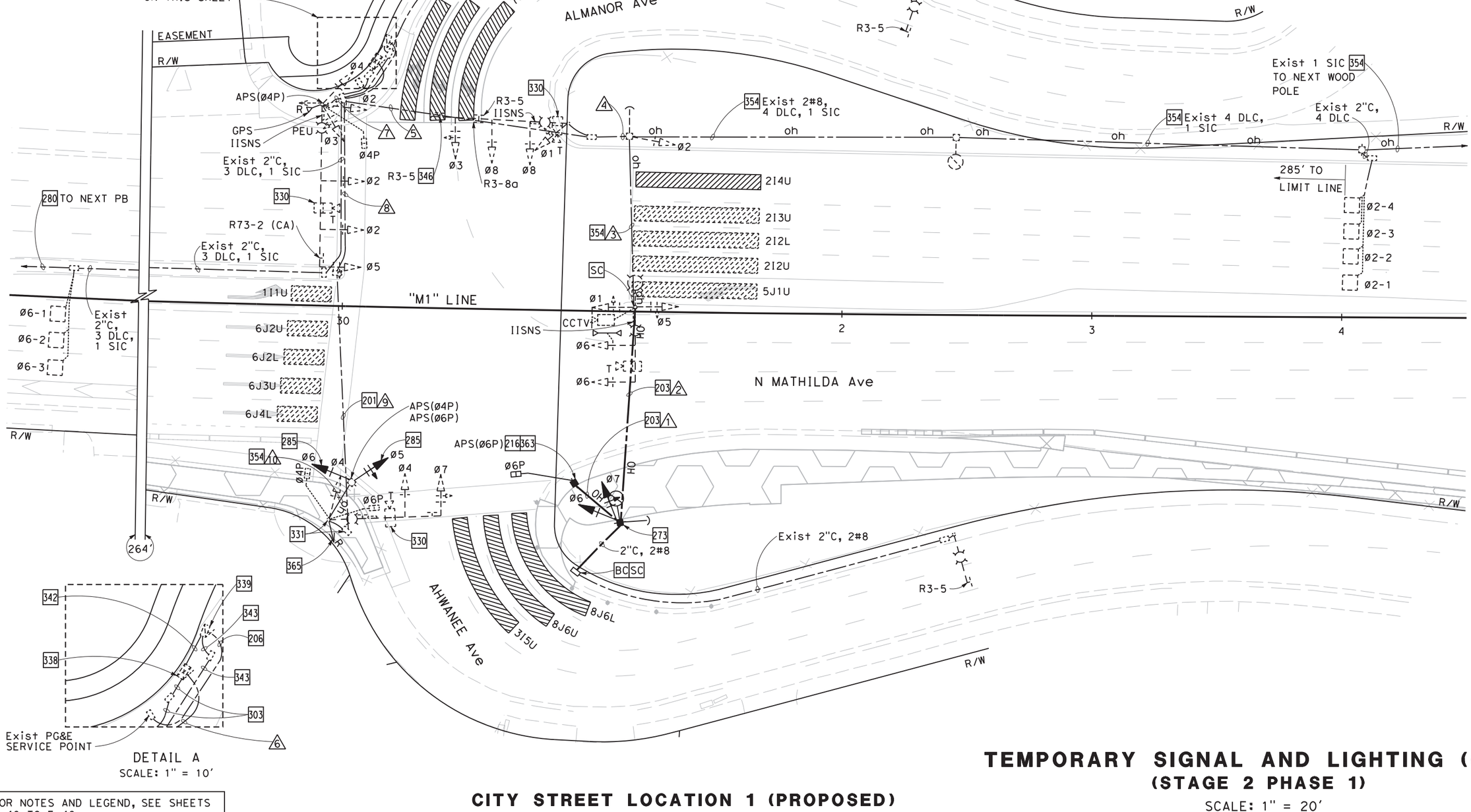

FOR NOTES AND LEGEND, SEE SHEETS E-46 TO E-48

CITY STREET LOCATION 1 (PROPOSED)

APPROVED FOR ELECTRICAL WORK ONLY

TEMPORARY SIGNAL AND LIGHTING (CITY)
(STAGE 2 PHASE 1)

SCALE: 1" = 20'

E-123

REVISED BY | DATE REVISED
MENG YANG | DAN YAU
CALCULATED-DESIGNED BY | CHECKED BY
CONSULTANT FUNCTIONAL SUPERVISOR: TIMOTHY J. LEE
STATE OF CALIFORNIA - DEPARTMENT OF TRANSPORTATION
Caltrans

LAST REVISION 00-00-00 | DATE PLOTTED => $DATE | TIME PLOTTED => $TIME

BORDER LAST REVISED 7/2/2010 | USERNAME => $USER | DGN FILE => $REQUEST | RELATIVE BORDER SCALE IS IN INCHES 0 1 2 3 | UNIT 0712 | PROJECT NUMBER & PHASE 0413000204

Dist	COUNTY	ROUTE	POST MILES TOTAL PROJECT	SHEET No.	TOTAL SHEETS
04	SCL	101,237	45.2/45.8, 2.7/3.3	505	736

REGISTERED CIVIL ENGINEER 6-13-18 DATE

6-20-18
PLANS APPROVAL DATE

REGISTERED PROFESSIONAL ENGINEER KIN Y. CHAN No. 55391 Exp. 12/31/18 CIVIL STATE OF CALIFORNIA

THE STATE OF CALIFORNIA OR ITS OFFICERS OR AGENTS SHALL NOT BE RESPONSIBLE FOR THE ACCURACY OR COMPLETENESS OF SCANNED COPIES OF THIS PLAN SHEET.

Y&C TRANSPORTATION CONSULTANTS, INC.
3250 Ramos Circle
Sacramento, CA 95827

VTA
3331 N First St
Building B
San Jose, CA 95134

SCHEDULE: (FOR SHEET E-123)

CONDUCTOR AND CONDUIT SCHEDULE

CONDUCTOR SCHEDULE	No. OF CONDUCTORS CONDUIT RUN NUMBER 1	2	3	4	5	6	7	8	9	10
No. 14 CONDUCTORS										
Ø1			3	3	3	3				
Ø2				3	3	6	3			
Ø3					3	6	3			
Ø4						3	3	3	3	
Ø5			3	3	3	6	3	3	3	3+
Ø6		3	3	3	3	6		3	3	3+
Ø7		3	3	3	3	6		3	3	
Ø8					3	3				
Ø4P						2	2	2	2	
Ø6P	2	2	2	2	2	4		2	2	
IISNS			2	2	2		2	2	2	
PEU							3			
SPARES	3	3	3	3	3	6	3	3	3	3+
TOTAL No. 14	5	11	19	22	28	51	22	21	21	9
No. 12 CONDUCTORS										
APS Ø4P						2	2	2	2	2
APS Ø6P	2	2	2	2	2	4		2	2	2
TOTAL No. 12	2	2	2	2	2	6	2	4	4	4
No. 8 CONDUCTORS										
LIGHTING		2	2	2	2		2	2	2	
SIGNAL NEUTRAL	1	1	1	1	1	1	1	1	1	
TOTAL No. 8	1	3	3	3	3	1	3	3	3	
DETECTOR CABLES (DLC)										
Ø2				4	4	4				
Ø6						3				
TOTAL DETECTOR CABLES				4	4	7				
THERMAL VEHICLE DETECTION CABLE			1	1	2	4	1	1	1	
CCTV CABLE			1	1	1	1				
GPS EVUC						1	1			
SIC				1	1					
CONDUIT SIZE (INCHES)	OH	OH	OH	3	2-2"	2-3"	2	2	2	OH
NEW/EXISTING CONDUIT	N	N	E	N	E	E	E	E	E	E
% FILL				21	35	25	32	29	29	

+ ADD CONDUCTOR(S)/CABLE(S) TO Exist OH/CONDUIT.

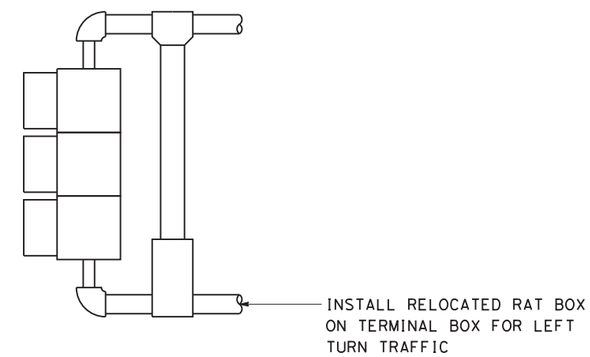

DETAIL A

FOR NOTES AND LEGEND, SEE SHEETS E-46 TO E-48

CITY STREET LOCATION 1 (PROPOSED)

TEMPORARY SIGNAL AND LIGHTING (CITY)
(STAGE 2 PHASE 1)

E-124

STATE OF CALIFORNIA - DEPARTMENT OF TRANSPORTATION
Caltrans

CONSULTANT FUNCTIONAL SUPERVISOR: TIMOTHY J. LEE
CALCULATED-DESIGNED BY: MENG YANG
CHECKED BY: DAN YAU
REVISED BY
DATE REVISED

LAST REVISION 00-00-00
DATE PLOTTED => $DATE
TIME PLOTTED => $TIME

NOTE:

FOR ACCURATE RIGHT OF WAY DATA, CONTACT RIGHT OF WAY ENGINEERING AT THE DISTRICT OFFICE.

Dist	COUNTY	ROUTE	POST MILES TOTAL PROJECT	SHEET No.	TOTAL SHEETS
04	SCL	101,237	45.2/45.8, 2.7/3.3	506	736

6-13-18
REGISTERED CIVIL ENGINEER DATE

6-20-18
PLANS APPROVAL DATE

REGISTERED PROFESSIONAL ENGINEER
KIN Y. CHAN
No. 55391
Exp. 12/31/18
CIVIL
STATE OF CALIFORNIA

THE STATE OF CALIFORNIA OR ITS OFFICERS OR AGENTS SHALL NOT BE RESPONSIBLE FOR THE ACCURACY OR COMPLETENESS OF SCANNED COPIES OF THIS PLAN SHEET.

Y&C TRANSPORTATION CONSULTANTS, INC.
3250 Ramos Circle
Sacramento, CA 95827

VTA
3331 N First St
Building B
San Jose, CA 95134

TO NEXT SIC PULL BOX
TO NEXT STREET LIGHT PULL BOX
TO NEXT PULL BOX
TO NEXT SIC PULL BOX
ROUTE 237 WB ON-RAMP
MOFFETT PARK Dr
"D2" LINE
"L6" LINE
"M1" LINE
"D3" LINE
N MATHILDA Ave
R/W
DRIVEWAY
ROUTE 237 WB OFF-RAMP
86'
160
177'
165'
7J5L
7J5U
5J1L
5J1U
213L
214U
214L
212U
212L
213U
6J4U
6J4L
6J3U
6J2U
6J2L
8J8U
8J8L
8J7L
8J6U
8J6L
8J7U
259
4-SEC
PBA(Ø2P)
PBA(Ø8P)

EXISTING PHASE DIAGRAM
STEADY DEMAND SEQUENCE

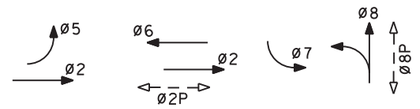

FOR NOTES AND LEGEND, SEE SHEETS E-46 TO E-48

CITY STREET LOCATION 7 (EXISTING)

APPROVED FOR ELECTRICAL WORK ONLY

TEMPORARY SIGNAL AND LIGHTING (CITY)
(STAGE 2 PHASE 1)

SCALE: 1" = 20'

E-125

STATE OF CALIFORNIA - DEPARTMENT OF TRANSPORTATION
CONSULTANT FUNCTIONAL SUPERVISOR: TIMOTHY J. LEE
CALCULATED-DESIGNED BY: MENG YANG
CHECKED BY: DAN YAU
REVISED BY
DATE REVISED
Caltrans

LAST REVISION 00-00-00
DATE PLOTTED => $DATE
TIME PLOTTED => $TIME

BORDER LAST REVISED 7/2/2010
USERNAME => $USER
DGN FILE => $REQUEST
RELATIVE BORDER SCALE IS IN INCHES 0 1 2 3
UNIT 0712
PROJECT NUMBER & PHASE 0413000204

NOTES:

1. FOR ACCURATE RIGHT OF WAY DATA, CONTACT RIGHT OF WAY ENGINEERING AT THE DISTRICT OFFICE.
2. FOR SCHEDULES, SEE SHEET E-128.

Dist	COUNTY	ROUTE	POST MILES TOTAL PROJECT	SHEET No.	TOTAL SHEETS
04	SCL	101,237	45.2/45.8, 2.7/3.3	507	736

6-13-18
REGISTERED CIVIL ENGINEER — DATE

6-20-18
PLANS APPROVAL DATE

REGISTERED PROFESSIONAL ENGINEER
KIN Y. CHAN
No. 55391
Exp. 12/31/18
CIVIL
STATE OF CALIFORNIA

THE STATE OF CALIFORNIA OR ITS OFFICERS OR AGENTS SHALL NOT BE RESPONSIBLE FOR THE ACCURACY OR COMPLETENESS OF SCANNED COPIES OF THIS PLAN SHEET.

Y&C TRANSPORTATION CONSULTANTS, INC.
3250 Ramos Circle
Sacramento, CA 95827

VTA
3331 N First St
Building B
San Jose, CA 95134

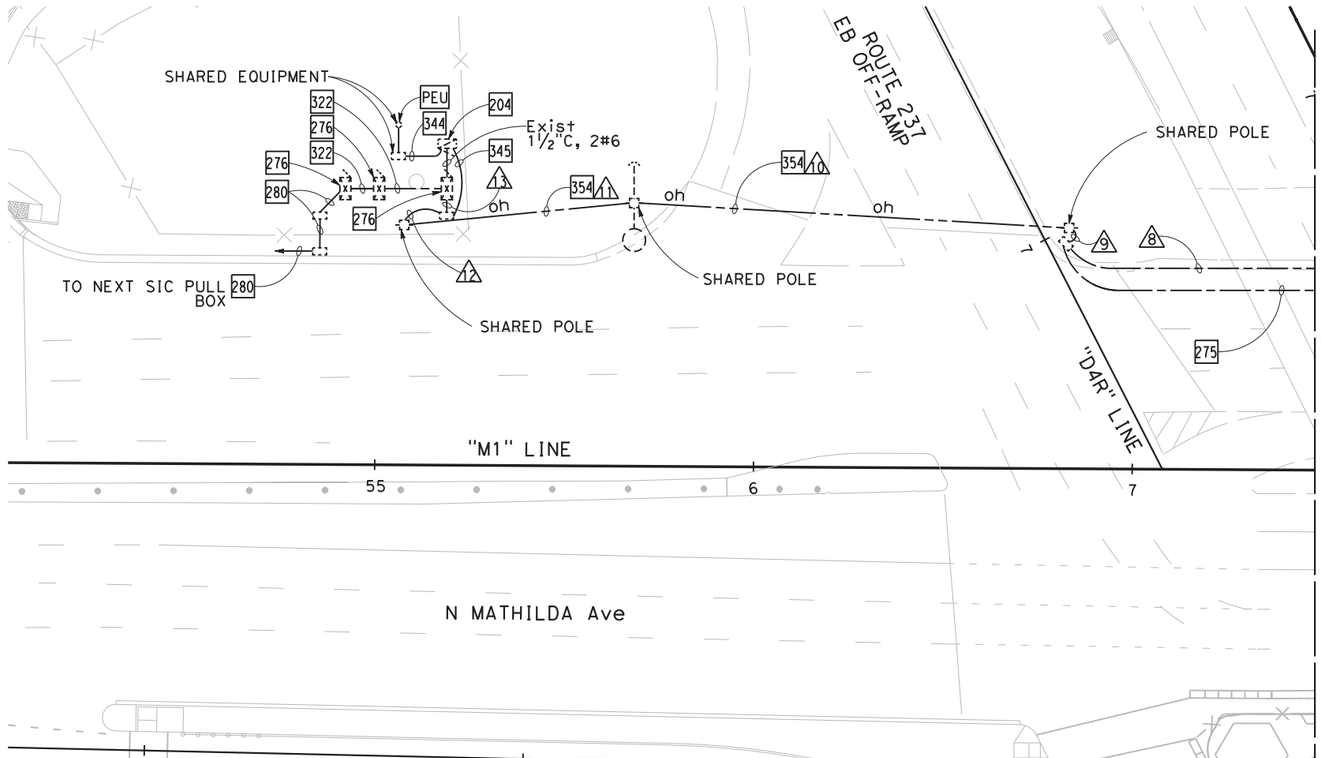

FOR NOTES AND LEGEND, SEE SHEETS E-46 TO E-48

CITY STREET LOCATION 7 (PROPOSED)

APPROVED FOR ELECTRICAL WORK ONLY

TEMPORARY SIGNAL AND LIGHTING (CITY)
(STAGE 2 PHASE 1)

SCALE: 1" = 20'

E-126

STATE OF CALIFORNIA - DEPARTMENT OF TRANSPORTATION
Caltrans

CONSULTANT FUNCTIONAL SUPERVISOR: TIMOTHY J.LEE
CALCULATED-DESIGNED BY: MENG YANG
CHECKED BY: DAN YAU
REVISED BY
DATE REVISED

LAST REVISION 00-00-00
DATE PLOTTED => $DATE
TIME PLOTTED => $TIME

BORDER LAST REVISED 7/2/2010
USERNAME => $USER
DGN FILE => $REQUEST
RELATIVE BORDER SCALE IS IN INCHES 0 1 2 3
UNIT 0712
PROJECT NUMBER & PHASE 0413000204

NOTES:

1. FOR ACCURATE RIGHT OF WAY DATA, CONTACT RIGHT OF WAY ENGINEERING AT THE DISTRICT OFFICE.
2. FOR SCHEDULES, SEE SHEET E-128.

Dist	COUNTY	ROUTE	POST MILES TOTAL PROJECT	SHEET No.	TOTAL SHEETS
04	SCL	101,237	45.2/45.8, 2.7/3.3	508	736

6-13-18
REGISTERED CIVIL ENGINEER — DATE

6-20-18
PLANS APPROVAL DATE

REGISTERED PROFESSIONAL ENGINEER — KIN Y. CHAN No. 55391 Exp. 12/31/18 CIVIL — STATE OF CALIFORNIA

THE STATE OF CALIFORNIA OR ITS OFFICERS OR AGENTS SHALL NOT BE RESPONSIBLE FOR THE ACCURACY OR COMPLETENESS OF SCANNED COPIES OF THIS PLAN SHEET.

Y&C TRANSPORTATION CONSULTANTS, INC.
3250 Ramos Circle
Sacramento, CA 95827

VTA
3331 N First St
Building B
San Jose, CA 95134

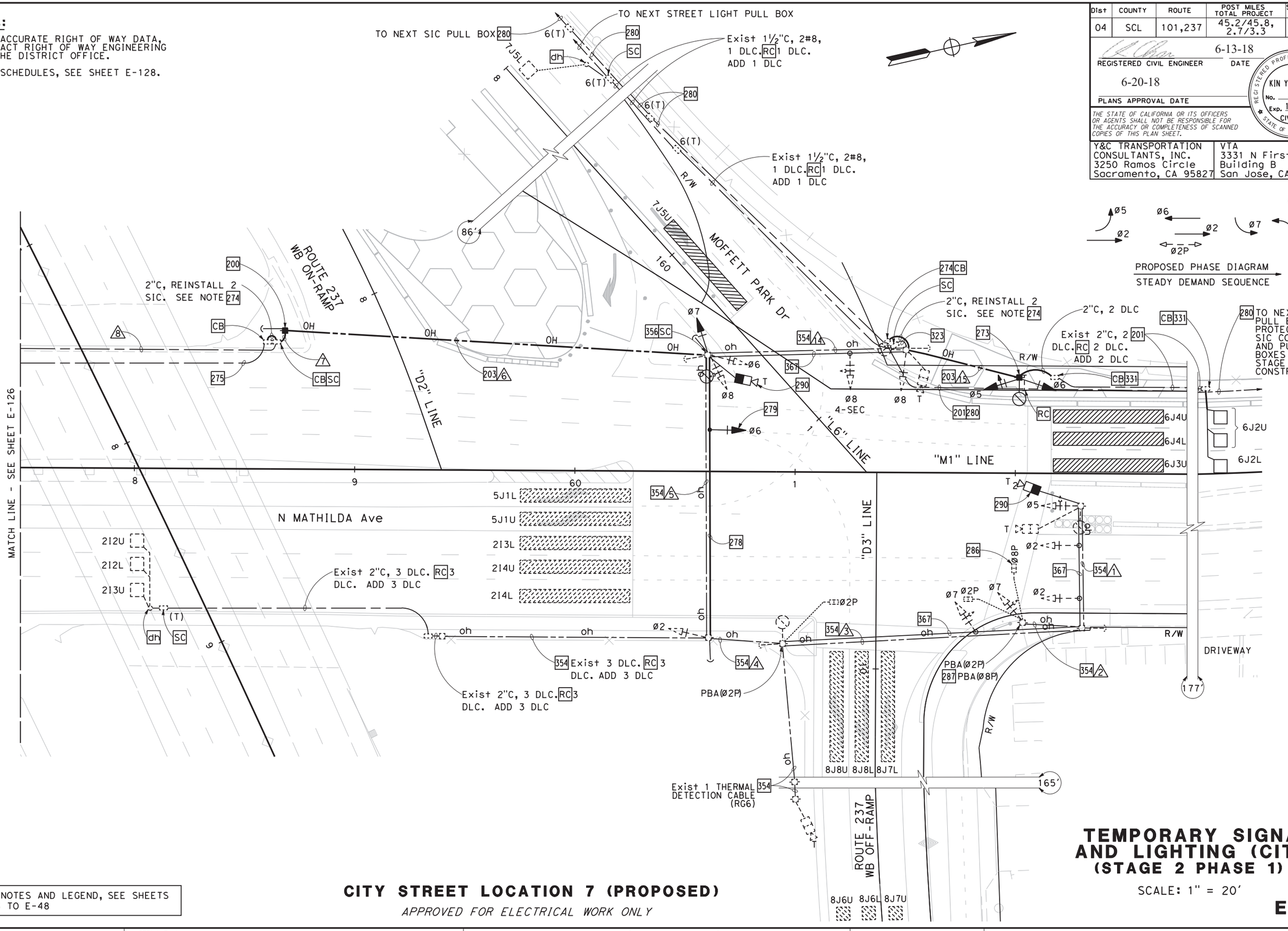

PROPOSED PHASE DIAGRAM
STEADY DEMAND SEQUENCE

FOR NOTES AND LEGEND, SEE SHEETS E-46 TO E-48

CITY STREET LOCATION 7 (PROPOSED)

APPROVED FOR ELECTRICAL WORK ONLY

TEMPORARY SIGNAL AND LIGHTING (CITY) (STAGE 2 PHASE 1)

SCALE: 1" = 20'

E-127

MENG YANG — REVISED BY
DAN YAU — DATE REVISED
CALCULATED-DESIGNED BY
CHECKED BY
TIMOTHY J.LEE — CONSULTANT FUNCTIONAL SUPERVISOR

STATE OF CALIFORNIA - DEPARTMENT OF TRANSPORTATION
Caltrans

DATE PLOTTED => $DATE
TIME PLOTTED => $TIME
LAST REVISION 00-00-00

BORDER LAST REVISED 7/2/2010
USERNAME => $USER
DGN FILE => $REQUEST
RELATIVE BORDER SCALE IS IN INCHES 0 1 2 3
UNIT 0712
PROJECT NUMBER & PHASE 0413000204

Dist	COUNTY	ROUTE	POST MILES TOTAL PROJECT	SHEET No.	TOTAL SHEETS
04	SCL	101,237	45.2/45.8, 2.7/3.3	509	736

REGISTERED CIVIL ENGINEER — DATE 6-13-18

PLANS APPROVAL DATE 6-20-18

REGISTERED PROFESSIONAL ENGINEER — KIN Y. CHAN — No. 55391 — Exp. 12/31/18 — CIVIL — STATE OF CALIFORNIA

THE STATE OF CALIFORNIA OR ITS OFFICERS OR AGENTS SHALL NOT BE RESPONSIBLE FOR THE ACCURACY OR COMPLETENESS OF SCANNED COPIES OF THIS PLAN SHEET.

Y&C TRANSPORTATION CONSULTANTS, INC.
3250 Ramos Circle
Sacramento, CA 95827

VTA
3331 N First St
Building B
San Jose, CA 95134

SCHEDULES: (FOR SHEET E-126 & E-127)

CONDUCTOR AND CONDUIT SCHEDULE

CONDUCTOR SCHEDULE	No. OF CONDUCTORS IN CONDUIT RUN NUMBER 1	2	3	4	5	6	7	8	9	10	11	12	13	14	15
No. 14 CONDUCTORS															
Ø2	3		3	3	3	3	3	3	3	3	3	3	3		
Ø5	3		3	3	3	6	6	6	6	6	6	6	6	3	3
Ø6					3+	3	3	3	3	3	3	3	3	3	3
Ø7		3	3	3	3	3	3	3	3	3	3	3	3		
Ø8						3	3	3	3	3	3	3	3	3	
Ø2P		2	2	2	2	2	2	2	2	2	2	2	2		
Ø8P		2	2	2	2	4	4	4	4	4	4	4	4	2	
PBA Ø2P		1	1	1	1	1	1	1	1	1	1	1	1		
PBA Ø8P		1	1	1	1	2	2	2	2	2	2	2	2	1	
PBA COMMON		1	1	1	1	2	2	2	2	2	2	2	2	1	
SPARES	3	3	3	3	3	6	6	6	6	6	6	6	6	3	3
TOTAL No. 14	9	10	19	19	22	35	35	35	35	35	35	35	35	16	9
No. 8 CONDUCTORS															
IISNS								2-	2-	2-	2-	2-	2-		
LIGHTING	2		2	2	2	2	2	2	2	2	2	2	2	2	2
SIGNAL NEUTRAL	1		1	1	1	1	2	2	2	2	2	2	2	1	1
TOTAL No. 8	3		3	3	3	3	4	4	4	4	4	4	4	3	3
DETECTOR CABLES (DLC)															
2I2U					1-+	1	1	1-+	1-+	1-+	1-+	1-+	1-+		
2I2L					1-+	1	1	1-+	1-+	1-+	1-+	1-+	1-+		
2I3U					1-+	1	1	1-+	1-+	1-+	1-+	1-+	1-+		
6J2U						1	1	1-+	1-+	1-+	1-+	1-+	1-+	1-+	1
6J2L						1	1	1-+	1-+	1-+	1-+	1-+	1-+	1-+	1
7J5U								1-	1-	1-	1-	1-	1-		
7J5L						1	1	1-+	1-+	1-+	1-+	1-+	1-+	1-+	
TOTAL DETECTOR CABLES					3	6	6	6	6	6	6	6	6	3	2
THERMAL VEHICLE DETECTION CABLE (RG6)	1-+ 2		1-+ 2-+ 3	2-+ 3	5	5	4-+ 5	4-+ 5	4-+ 5	4-+ 5	4-+ 5	4-+ 5	4-+ 5	1-+	
SIC						2*	2*		2	2	2	2	2	2*	
CONDUIT SIZE (INCHES)	OH	OH	OH	OH	OH	OH	4	2-3"	2-3"	4	OH	OH	4	OH	3
NEW/EXISTING CONDUIT	E	E	E	E	E	N	N	E	E	E	E	E	E	E	N
% FILL							25	22	24	25			25		8

- REMOVE Exist CONDUCTOR(S)/CABLE(S).
+ ADD NEW CONDUCTOR(S)/CABLE(S).
* REINSTALL Exist SIC.

FOR NOTES AND LEGEND, SEE SHEETS E-46 TO E-48

CITY STREET LOCATION 7 (PROPOSED)

APPROVED FOR ELECTRICAL WORK ONLY

TEMPORARY SIGNAL AND LIGHTING (CITY) (STAGE 2 PHASE 1)

E-128

REVISED BY | DATE REVISED
MENG YANG | DAN YAU
CALCULATED-DESIGNED BY | CHECKED BY
CONSULTANT FUNCTIONAL SUPERVISOR: TIMOTHY J. LEE
STATE OF CALIFORNIA - DEPARTMENT OF TRANSPORTATION — Caltrans

LAST REVISION 00-00-00 | DATE PLOTTED => $DATE | TIME PLOTTED => $TIME

BORDER LAST REVISED 7/2/2010 | USERNAME => $USER | DGN FILE => $REQUEST | RELATIVE BORDER SCALE IS IN INCHES 0 1 2 3 | UNIT 0712 | PROJECT NUMBER & PHASE 0413000204

NOTES:

1. FOR ACCURATE RIGHT OF WAY DATA, CONTACT RIGHT OF WAY ENGINEERING AT THE DISTRICT OFFICE.
2. FOR SCHEDULES, SEE SHEET E-130.

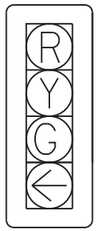

12" RED BALL

12" YELLOW BALL

12" GREEN BALL

12" GREEN LEFT ARROW

DETAIL A
NO SCALE

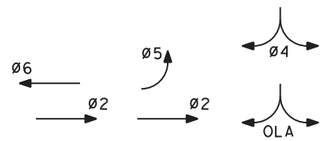

EXISTING PHASE DIAGRAM
STEADY DEMAND SEQUENCE
OLA = ø4+ø4 GREEN EXT
GPS EVUD

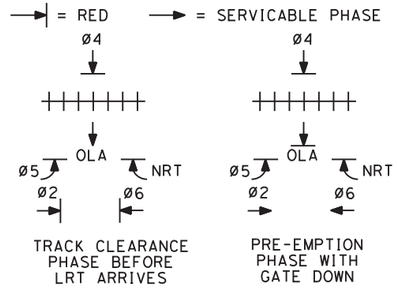

TRACK CLEARANCE PHASE BEFORE LRT ARRIVES

PRE-EMPTION PHASE WITH GATE DOWN

TRACK CLEARANCE EXISTING RAILROAD PRE-EMPTION PHASE

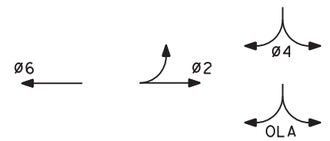

PROPOSED PHASE DIAGRAM
STEADY DEMAND SEQUENCE
OLA = ø4+ø4 GREEN EXT
GPS EVUD

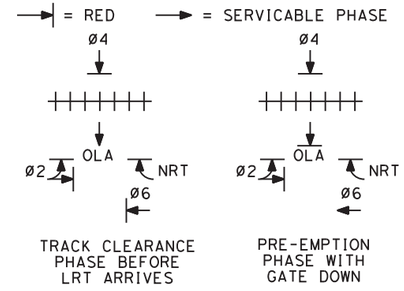

TRACK CLEARANCE PHASE BEFORE LRT ARRIVES

PRE-EMPTION PHASE WITH GATE DOWN

TRACK CLEARANCE PROPOSED RAILROAD PRE-EMPTION PHASE

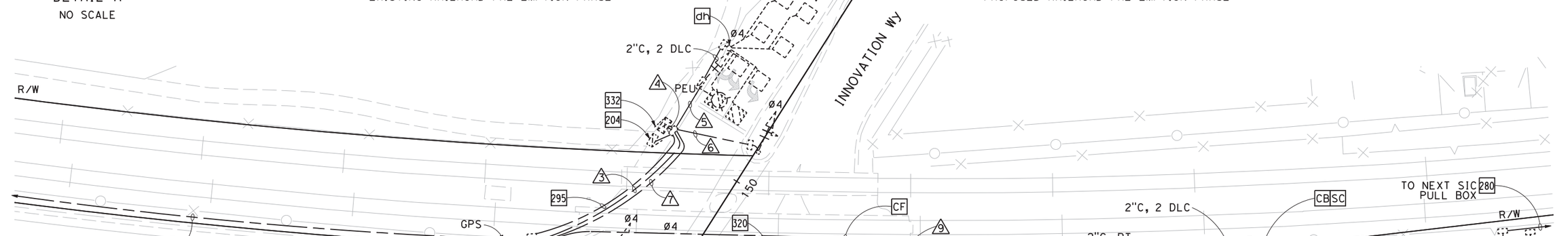

FOR NOTES AND LEGEND, SEE SHEETS E-46 TO E-48

CITY STREET LOCATION 9 (PROPOSED)

APPROVED FOR ELECTRICAL WORK ONLY

TEMPORARY SIGNAL AND LIGHTING (CITY)
(STAGE 2 PHASE 1)

SCALE: 1" = 20'

E-129

Dist	COUNTY	ROUTE	POST MILES TOTAL PROJECT	SHEET No.	TOTAL SHEETS
04	SCL	101,237	45.2/45.8, 2.7/3.3	510	736

6-13-18
REGISTERED CIVIL ENGINEER DATE

KIN Y. CHAN
No. 55391
Exp. 12/31/18
CIVIL
REGISTERED PROFESSIONAL ENGINEER
STATE OF CALIFORNIA

6-20-18
PLANS APPROVAL DATE

THE STATE OF CALIFORNIA OR ITS OFFICERS OR AGENTS SHALL NOT BE RESPONSIBLE FOR THE ACCURACY OR COMPLETENESS OF SCANNED COPIES OF THIS PLAN SHEET.

Y&C TRANSPORTATION CONSULTANTS, INC.
3250 Ramos Circle
Sacramento, CA 95827

VTA
3331 N First St
Building B
San Jose, CA 95134

REVISED BY	DATE REVISED

CALCULATED-DESIGNED BY: MENG YANG
CHECKED BY: DAN YAU
CONSULTANT FUNCTIONAL SUPERVISOR: TIMOTHY J. LEE

STATE OF CALIFORNIA - DEPARTMENT OF TRANSPORTATION
Caltrans

DATE PLOTTED => $DATE
TIME PLOTTED => $TIME
LAST REVISION 00-00-00

BORDER LAST REVISED 7/2/2010
USERNAME => $USER
DGN FILE => $REQUEST
RELATIVE BORDER SCALE IS IN INCHES 0 1 2 3
UNIT 0712
PROJECT NUMBER & PHASE 0413000204

Dist	COUNTY	ROUTE	POST MILES TOTAL PROJECT	SHEET No.	TOTAL SHEETS
04	SCL	101,237	45.2/45.8, 2.7/3.3	511	736

6-13-18
REGISTERED CIVIL ENGINEER — DATE

6-20-18
PLANS APPROVAL DATE

REGISTERED PROFESSIONAL ENGINEER
KIN Y. CHAN
No. 55391
Exp. 12/31/18
CIVIL
STATE OF CALIFORNIA

THE STATE OF CALIFORNIA OR ITS OFFICERS OR AGENTS SHALL NOT BE RESPONSIBLE FOR THE ACCURACY OR COMPLETENESS OF SCANNED COPIES OF THIS PLAN SHEET.

Y&C TRANSPORTATION CONSULTANTS, INC.
3250 Ramos Circle
Sacramento, CA 95827

VTA
3331 N First St
Building B
San Jose, CA 95134

SCHEDULES: (FOR SHEET E-129)

CONDUCTOR AND CONDUIT SCHEDULE

CONDUCTOR SCHEDULE	No. OF CONDUCTORS — CONDUIT RUN NUMBER 1	2	3	4	5	6	7	8	9
No. 14 CONDUCTORS									
Ø2	3	3	3	3					
Ø4				6	3	3	3		
Ø2#	3	3	3	6			3	3	
Ø6			3	6			3	3	
NRT ACTIVATED BLANK-OUT SIGN				2			2	2	2
OLA		3	3	3					
PEU					3				
SPARES	3	3	3	3	3	3	3	3	3
TOTAL No. 14	9	12	15	29	9	6	14	11	5
No. 10 CONDUCTORS									
IISNS	2	2	2						
LIGHTING	2	2	2		2	2	2	2	
TOTAL No. 10	4	4	4		2	2	2	2	
No. 8 CONDUCTORS									
SIGNAL NEUTRAL	1	1	2	2	1	1	1	1	
TOTAL No. 8	1	1	2	2	1	1	1	1	
No. 6 CONDUCTORS									
CONTROLLER				2					
TOTAL No. 6				2					
DETECTOR CABLES (DLC)									
2I2U		1	1	1					
2I2L		1	1	1					
2I4U		1	1	1					
2I4L		1	1	1					
4I6U				1	1				
4I6L				1	1				
2I3L*		1	1	1					
2I3U*		1	1	1					
6J2U				1			1	1	1
6J2L				1			1	1	1
6J4U				1⁻			1⁻	1⁻	1⁻
6J4L				1⁻			1⁻	1⁻	1⁻
TOTAL DETECTOR CABLES		6	6	10	2		2	2	2
THERMAL VEHICLE DETECTION CABLE			1+	1+					
GPS EVUC			1	1					
SIC				2					
CONDUIT SIZE (INCHES)	2	2	2-2"	2-3"	2	2	2	2	2
NEW/EXISTING CONDUIT	E	E	E	E	E	E	E	E	E
% FILL	11	26	27	19	13	7	17	15	7

- REMOVE Exist CONDUCTOR(S)/CABLE(S).
+ ADD NEW CONDUCTOR(S)/CABLE(S).
# USE Exist PHASE 5 CONDUCTORS FOR PHASE 2.
* USE Exist PHASE 5J1L AND 5J1U DLCs FOR PHASE 2I3U AND 2I3L.

FOR NOTES AND LEGEND, SEE SHEETS E-46 TO E-48

REVISED BY | DATE REVISED
MENG YANG | DAN YAU
CALCULATED-DESIGNED BY | CHECKED BY
CONSULTANT FUNCTIONAL SUPERVISOR: TIMOTHY J.LEE
STATE OF CALIFORNIA - DEPARTMENT OF TRANSPORTATION — Caltrans

TEMPORARY SIGNAL AND LIGHTING (CITY)
(STAGE 2 PHASE 1)

CITY STREET LOCATION 9 (PROPOSED)

APPROVED FOR ELECTRICAL WORK ONLY

E-130

LAST REVISION 00-00-00 | DATE PLOTTED => $DATE | TIME PLOTTED => $TIME

NOTES:

1. FOR ACCURATE RIGHT OF WAY DATA, CONTACT RIGHT OF WAY ENGINEERING AT THE DISTRICT OFFICE.
2. FOR SCHEDULE, SEE SHEET E-132.

Dist	COUNTY	ROUTE	POST MILES TOTAL PROJECT	SHEET No.	TOTAL SHEETS
04	SCL	101,237	45.2/45.8, 2.7/3.3	512	736

6-13-18
REGISTERED CIVIL ENGINEER — DATE

KIN Y. CHAN
No. 55391
Exp. 12/31/18
CIVIL
REGISTERED PROFESSIONAL ENGINEER
STATE OF CALIFORNIA

6-20-18
PLANS APPROVAL DATE

THE STATE OF CALIFORNIA OR ITS OFFICERS OR AGENTS SHALL NOT BE RESPONSIBLE FOR THE ACCURACY OR COMPLETENESS OF SCANNED COPIES OF THIS PLAN SHEET.

Y&C TRANSPORTATION CONSULTANTS, INC.
3250 Ramos Circle
Sacramento, CA 95827

VTA
3331 N First St
Building B
San Jose, CA 95134

EXISTING PHASE DIAGRAM (NO CHANGE)
STEADY DEMAND SEQUENCE
GPS EVUD

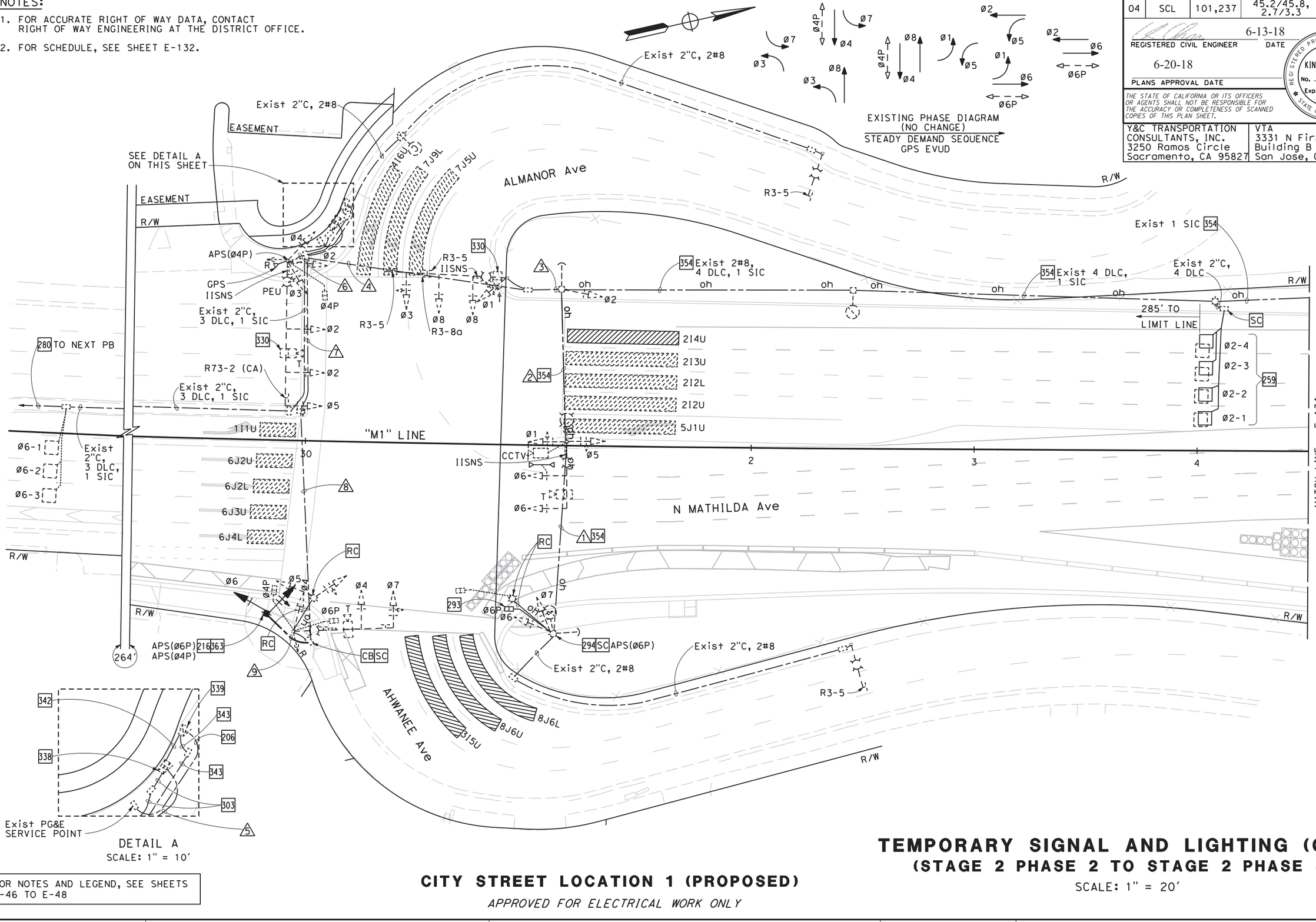

DETAIL A
SCALE: 1" = 10'

FOR NOTES AND LEGEND, SEE SHEETS E-46 TO E-48

CITY STREET LOCATION 1 (PROPOSED)

APPROVED FOR ELECTRICAL WORK ONLY

TEMPORARY SIGNAL AND LIGHTING (CITY)
(STAGE 2 PHASE 2 TO STAGE 2 PHASE 3)

SCALE: 1" = 20'

E-131

STATE OF CALIFORNIA - DEPARTMENT OF TRANSPORTATION
CONSULTANT FUNCTIONAL SUPERVISOR: TIMOTHY J. LEE
CALCULATED-DESIGNED BY: MENG YANG
CHECKED BY: DAN YAU
REVISED BY / DATE REVISED

LAST REVISION 00-00-00
DATE PLOTTED => $DATE
TIME PLOTTED => $TIME

BORDER LAST REVISED 7/2/2010
USERNAME => $USER
DGN FILE => $REQUEST
RELATIVE BORDER SCALE IS IN INCHES 0 1 2 3
UNIT 0712
PROJECT NUMBER & PHASE 0413000204

SCHEDULE: (FOR SHEET E-131)

CONDUCTOR AND CONDUIT SCHEDULE									
CONDUCTOR SCHEDULE	No. OF CONDUCTORS CONDUIT RUN NUMBER								
	1	2	3	4	5	6	7	8	9
No. 14 CONDUCTORS									
Ø1		3	3	3	3				
Ø2			3	3	6	3			
Ø3				3	6	3			
Ø4					3	3	3	3	
Ø5		3	3	3	6	3	3	3	3
Ø6	3	3	3	3	6		3	3	3
Ø7	3	3	3	3	6		3	3	
Ø8				3	3				
Ø4P					2	2	2	2	
Ø6P	2	2	2	2	4		2	2	
IISNS		2	2	2		2	2	2	
PEU						3			
SPARES	3	3	3	3	6	3	3	3	3
TOTAL No. 14	11	19	22	28	51	22	21	21	9
No. 12 CONDUCTORS									
APS Ø4P					2	2	2	2	2
APS Ø6P	2	2	2	2	4		2	2	2
TOTAL No. 12	2	2	2	2	6	2	4	4	4
No. 8 CONDUCTORS									
LIGHTING	2	2	2	2		2	2	2	
SIGNAL NEUTRAL	1	1	1	1	1	1	1	1	
TOTAL No. 8	3	3	3	3	1	3	3	3	
DETECTOR CABLES (DLC)									
Ø2			4	4	4				
Ø6					3				
TOTAL DETECTOR CABLES			4	4	7				
THERMAL VEHICLE DETECTION CABLE		1	1	2	4	1	1	1	
CCTV CABLE		1	1	1	1				
GPS EVUC					1	1			
SIC			1	1					
CONDUIT SIZE (INCHES)	OH	OH	3	2-2"	2-3"	2	2	2	2
NEW/EXISTING CONDUIT	E	E	E	E	E	E	E	E	N
% FILL			21	35	25	32	29	29	9

FOR NOTES AND LEGEND, SEE SHEETS E-46 TO E-48

CITY STREET LOCATION 1 (PROPOSED)

TEMPORARY SIGNAL AND LIGHTING (CITY)
(STAGE 2 PHASE 2 TO STAGE 2 PHASE 3)

E-132

Dist	COUNTY	ROUTE	POST MILES TOTAL PROJECT	SHEET No.	TOTAL SHEETS
04	SCL	101,237	45.2/45.8, 2.7/3.3	513	736

6-13-18
REGISTERED CIVIL ENGINEER — DATE

6-20-18
PLANS APPROVAL DATE

REGISTERED PROFESSIONAL ENGINEER
KIN Y. CHAN
No. 55391
Exp. 12/31/18
CIVIL
STATE OF CALIFORNIA

THE STATE OF CALIFORNIA OR ITS OFFICERS OR AGENTS SHALL NOT BE RESPONSIBLE FOR THE ACCURACY OR COMPLETENESS OF SCANNED COPIES OF THIS PLAN SHEET.

Y&C TRANSPORTATION CONSULTANTS, INC.
3250 Ramos Circle
Sacramento, CA 95827

VTA
3331 N First St
Building B
San Jose, CA 95134

REVISED BY | DATE REVISED
MENG YANG | DAN YAU
CALCULATED-DESIGNED BY | CHECKED BY
CONSULTANT FUNCTIONAL SUPERVISOR: TIMOTHY J. LEE
STATE OF CALIFORNIA - DEPARTMENT OF TRANSPORTATION
Caltrans

DATE PLOTTED => $DATE
TIME PLOTTED => $TIME
LAST REVISION 00-00-00

BORDER LAST REVISED 7/2/2010 | USERNAME => $USER | DGN FILE => $REQUEST | RELATIVE BORDER SCALE IS IN INCHES 0 1 2 3 | UNIT 0712 | PROJECT NUMBER & PHASE 0413000204

NOTE:

FOR ACCURATE RIGHT OF WAY DATA, CONTACT
RIGHT OF WAY ENGINEERING AT THE DISTRICT OFFICE.

Dist	COUNTY	ROUTE	POST MILES TOTAL PROJECT	SHEET No.	TOTAL SHEETS
04	SCL	101,237	45.2/45.8, 2.7/3.3	514	736

6-13-18
REGISTERED CIVIL ENGINEER — DATE

6-20-18
PLANS APPROVAL DATE

REGISTERED PROFESSIONAL ENGINEER
KIN Y. CHAN
No. 55391
Exp. 12/31/18
CIVIL
STATE OF CALIFORNIA

THE STATE OF CALIFORNIA OR ITS OFFICERS OR AGENTS SHALL NOT BE RESPONSIBLE FOR THE ACCURACY OR COMPLETENESS OF SCANNED COPIES OF THIS PLAN SHEET.

Y&C TRANSPORTATION CONSULTANTS, INC.
3250 Ramos Circle
Sacramento, CA 95827

VTA
3331 N First St
Building B
San Jose, CA 95134

ø6
ø2 ø4
EXISTING PHASE DIAGRAM
STEADY DEMAND SEQUENCE
GPS EVUD

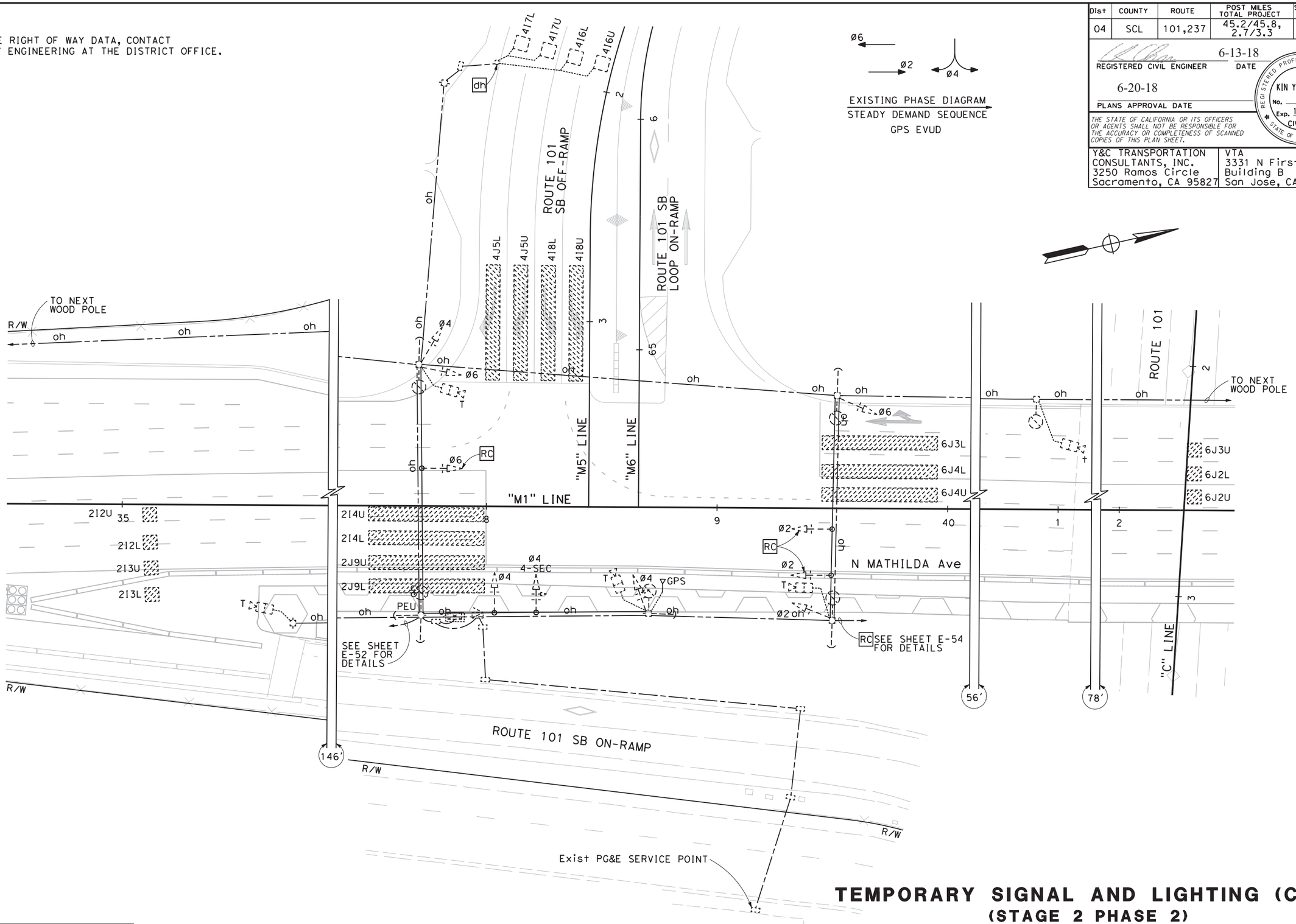

FOR NOTES AND LEGEND, SEE SHEETS E-46 TO E-48

CITY STREET LOCATION 2 (EXISTING)

APPROVED FOR ELECTRICAL WORK ONLY

TEMPORARY SIGNAL AND LIGHTING (CITY)

(STAGE 2 PHASE 2)

SCALE: 1" = 20'

E-133

STATE OF CALIFORNIA - DEPARTMENT OF TRANSPORTATION
Caltrans

CONSULTANT FUNCTIONAL SUPERVISOR: TIMOTHY J. LEE
CALCULATED-DESIGNED BY: MENG YANG
CHECKED BY: DAN YAU
REVISED BY
DATE REVISED

LAST REVISION 00-00-00
DATE PLOTTED => $DATE
TIME PLOTTED => $TIME

BORDER LAST REVISED 7/2/2010
USERNAME => $USER
DGN FILE => $REQUEST
RELATIVE BORDER SCALE IS IN INCHES 0 1 2 3
UNIT 0712
PROJECT NUMBER & PHASE 0413000204

NOTES:

1. FOR ACCURATE RIGHT OF WAY DATA, CONTACT RIGHT OF WAY ENGINEERING AT THE DISTRICT OFFICE.
2. FOR SCHEDULE, SEE SHEET E-135.

Dist	COUNTY	ROUTE	POST MILES TOTAL PROJECT	SHEET No.	TOTAL SHEETS
04	SCL	101,237	45.2/45.8, 2.7/3.3	515	736

6-13-18
REGISTERED CIVIL ENGINEER — DATE

6-20-18
PLANS APPROVAL DATE

KIN Y. CHAN No. 55391 Exp. 12/31/18 CIVIL — REGISTERED PROFESSIONAL ENGINEER — STATE OF CALIFORNIA

THE STATE OF CALIFORNIA OR ITS OFFICERS OR AGENTS SHALL NOT BE RESPONSIBLE FOR THE ACCURACY OR COMPLETENESS OF SCANNED COPIES OF THIS PLAN SHEET.

Y&C TRANSPORTATION CONSULTANTS, INC.
3250 Ramos Circle
Sacramento, CA 95827

VTA
3331 N First St
Building B
San Jose, CA 95134

EXISTING PHASE DIAGRAM (NO CHANGE)
STEADY DEMAND SEQUENCE
GPS EVUD

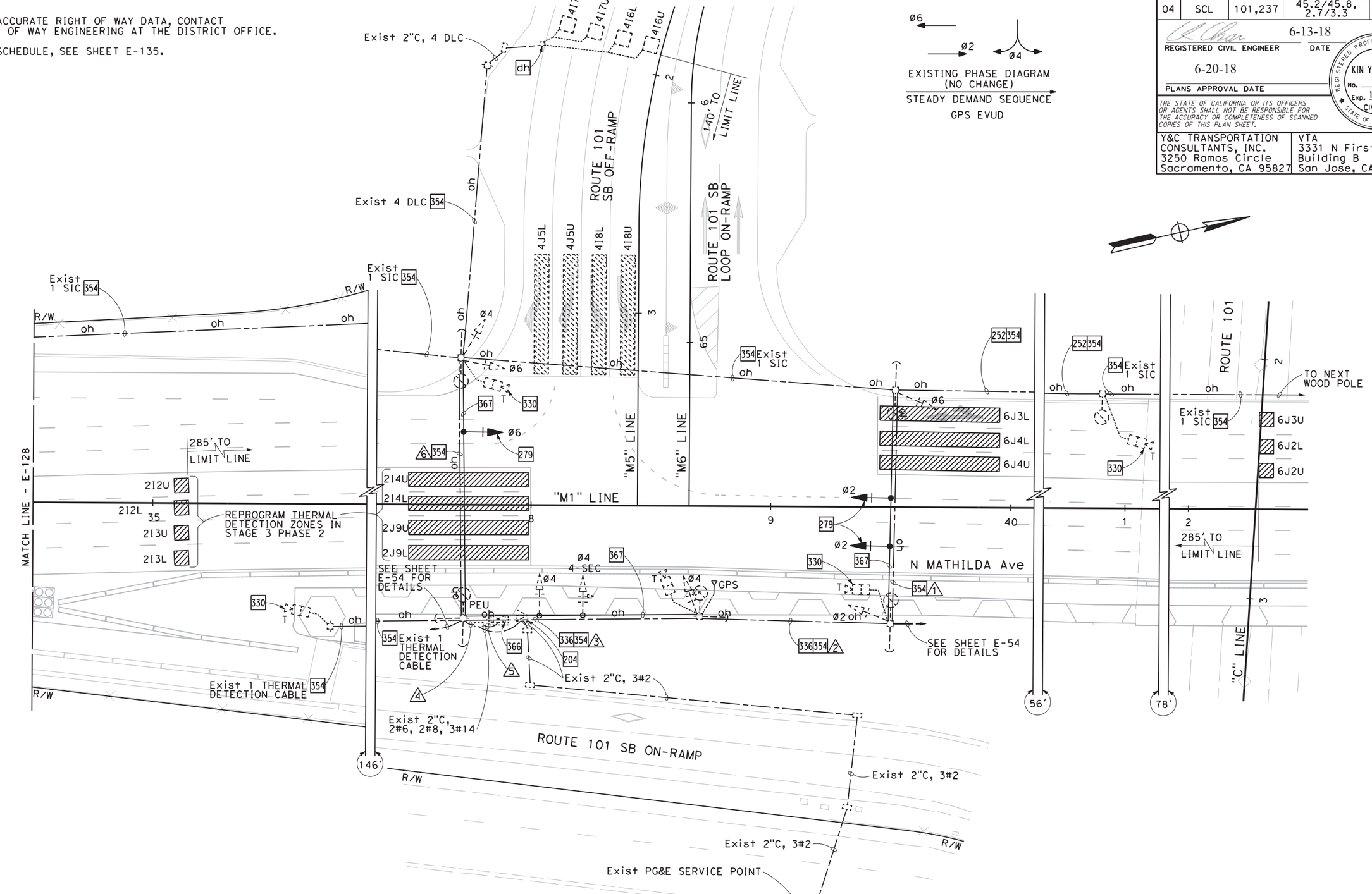

FOR NOTES AND LEGEND, SEE SHEETS E-46 TO E-48

CITY STREET LOCATION 2 (PROPOSED)

APPROVED FOR ELECTRICAL WORK ONLY

TEMPORARY SIGNAL AND LIGHTING (CITY)
(STAGE 2 PHASE 2 TO STAGE 3 PHASE 2)

SCALE: 1" = 20'

E-134

STATE OF CALIFORNIA - DEPARTMENT OF TRANSPORTATION — Caltrans
CONSULTANT FUNCTIONAL SUPERVISOR: TIMOTHY J.LEE
CALCULATED-DESIGNED BY: MENG YANG
CHECKED BY: DAN YAU
REVISED BY | DATE REVISED

LAST REVISION 00-00-00
DATE PLOTTED => $DATE
TIME PLOTTED => $TIME

BORDER LAST REVISED 7/2/2010
USERNAME => $USER
DGN FILE => $REQUEST
RELATIVE BORDER SCALE IS IN INCHES 0 1 2 3
UNIT 0712
PROJECT NUMBER & PHASE 0413000204

Dist	COUNTY	ROUTE	POST MILES TOTAL PROJECT	SHEET No.	TOTAL SHEETS
04	SCL	101,237	45.2/45.8, 2.7/3.3	516	736

6-13-18
REGISTERED CIVIL ENGINEER — DATE

6-20-18
PLANS APPROVAL DATE

REGISTERED PROFESSIONAL ENGINEER
KIN Y. CHAN
No. 55391
Exp. 12/31/18
CIVIL
STATE OF CALIFORNIA

THE STATE OF CALIFORNIA OR ITS OFFICERS OR AGENTS SHALL NOT BE RESPONSIBLE FOR THE ACCURACY OR COMPLETENESS OF SCANNED COPIES OF THIS PLAN SHEET.

Y&C TRANSPORTATION CONSULTANTS, INC.
3250 Ramos Circle
Sacramento, CA 95827

VTA
3331 N First St
Building B
San Jose, CA 95134

SCHEDULE: (FOR SHEET E-134)

CONDUCTOR AND CONDUIT SCHEDULE

CONDUCTOR SCHEDULE	No. OF CONDUCTORS — CONDUIT RUN NUMBER 1	2	3	4	5	6
No. 14 CONDUCTORS						
Ø2	3	3	3	3	3	
Ø4			3	6	6	3
Ø6	3	3	3	6	6	3
PEU				3		
SPARES	3	3	3	3	3	3
TOTAL No. 14	9	9	12	21	18	9
No. 8 CONDUCTORS						
LIGHTING	2	2	2	2		2
SIGNAL NEUTRAL	1	1	1	1	1	1
TOTAL No. 8	3	3	3	3	1	3
No. 6 CONDUCTORS						
CONTROLLER					2	
DETECTOR CABLES (DLC)						
4I6U				1	1	1
4I6L				1	1	1
4I7U				1	1	1
4I7L				1	1	1
TOTAL DETECTOR CABLES				4	4	4
THERMAL VEHICLE DETECTION CABLE	1	2	3	5	5	1
GPS EVUC			1	1	1	
SIC				2	2	2
CONDUIT SIZE (INCHES)	OH	OH	OH	2-3"	2-3"	OH
NEW/EXISTING CONDUIT	E	E	E	E	E	E
% FILL				20	20	

FOR NOTES AND LEGEND, SEE SHEETS E-46 TO E-48

CITY STREET LOCATION 2 (PROPOSED)

TEMPORARY SIGNAL AND LIGHTING (CITY)
(STAGE 2 PHASE 2 TO STAGE 3 PHASE 2)

E-135

REVISED BY | DATE REVISED
MENG YANG | DAN YAU
CALCULATED-DESIGNED BY | CHECKED BY
CONSULTANT FUNCTIONAL SUPERVISOR: TIMOTHY J. LEE
STATE OF CALIFORNIA - DEPARTMENT OF TRANSPORTATION
Caltrans

LAST REVISION 00-00-00 | DATE PLOTTED => $DATE | TIME PLOTTED => $TIME

BORDER LAST REVISED 7/2/2010 | USERNAME => $USER | DGN FILE => $REQUEST | RELATIVE BORDER SCALE IS IN INCHES 0 1 2 3 | UNIT 0712 | PROJECT NUMBER & PHASE 0413000204

NOTE:

FOR ACCURATE RIGHT OF WAY DATA, CONTACT RIGHT OF WAY ENGINEERING AT THE DISTRICT OFFICE.

Dist	COUNTY	ROUTE	POST MILES TOTAL PROJECT	SHEET No.	TOTAL SHEETS
04	SCL	101,237	45.2/45.8, 2.7/3.3	517	736

6-13-18
REGISTERED CIVIL ENGINEER — DATE

6-20-18
PLANS APPROVAL DATE

KIN Y. CHAN
No. 55391
Exp. 12/31/18
CIVIL
REGISTERED PROFESSIONAL ENGINEER
STATE OF CALIFORNIA

THE STATE OF CALIFORNIA OR ITS OFFICERS OR AGENTS SHALL NOT BE RESPONSIBLE FOR THE ACCURACY OR COMPLETENESS OF SCANNED COPIES OF THIS PLAN SHEET.

Y&C TRANSPORTATION CONSULTANTS, INC.
3250 Ramos Circle
Sacramento, CA 95827

VTA
3331 N First St
Building B
San Jose, CA 95134

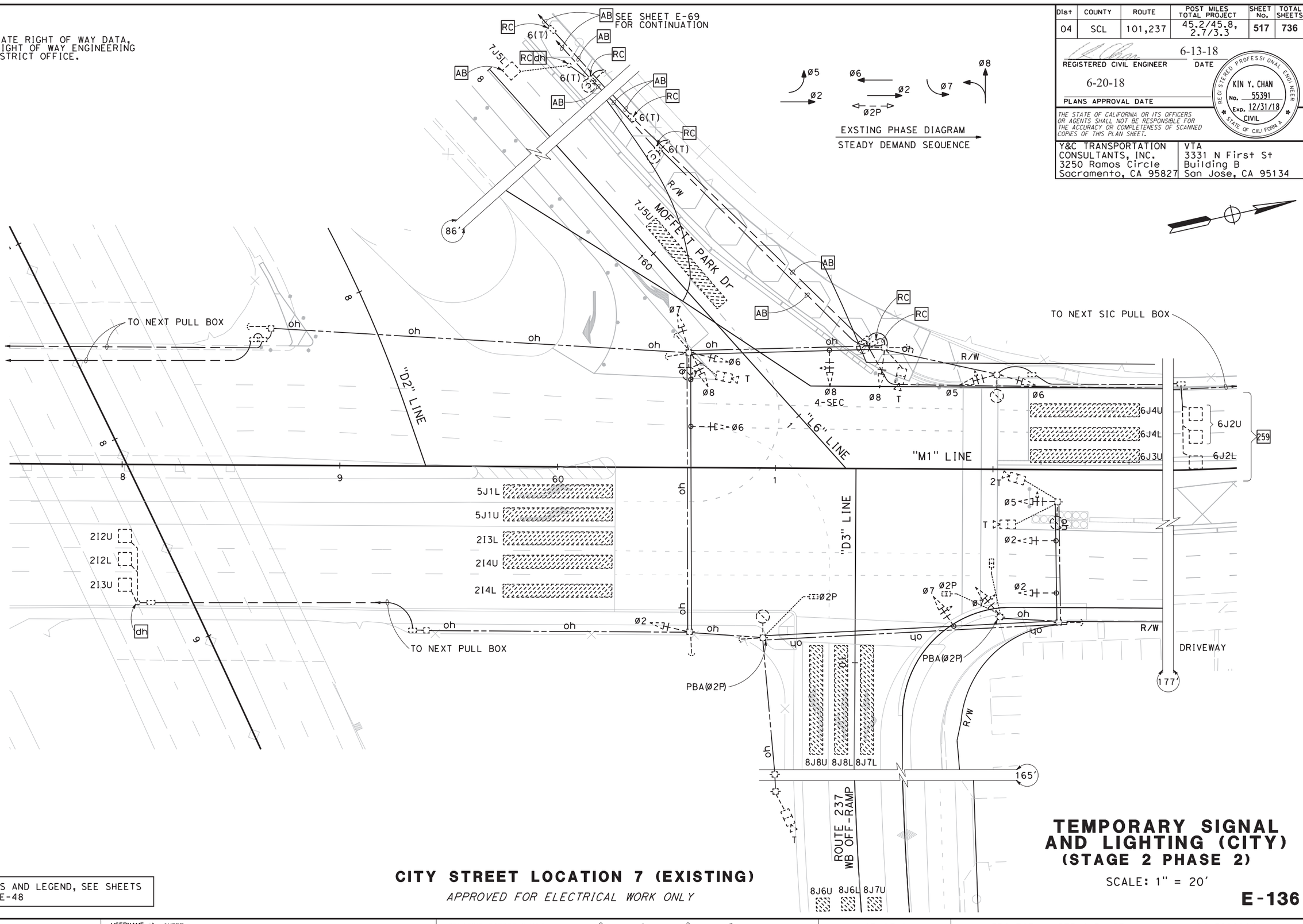

FOR NOTES AND LEGEND, SEE SHEETS E-46 TO E-48

CITY STREET LOCATION 7 (EXISTING)

APPROVED FOR ELECTRICAL WORK ONLY

TEMPORARY SIGNAL AND LIGHTING (CITY)
(STAGE 2 PHASE 2)

SCALE: 1" = 20'

E-136

STATE OF CALIFORNIA - DEPARTMENT OF TRANSPORTATION
Caltrans

CONSULTANT FUNCTIONAL SUPERVISOR: TIMOTHY J. LEE
CALCULATED-DESIGNED BY: MENG YANG
CHECKED BY: DAN YAU
REVISED BY / DATE REVISED

DATE PLOTTED => $DATE
TIME PLOTTED => $TIME
LAST REVISION 00-00-00

BORDER LAST REVISED 7/2/2010
USERNAME => $USER
DGN FILE => $REQUEST
RELATIVE BORDER SCALE IS IN INCHES 0 1 2 3
UNIT 0712
PROJECT NUMBER & PHASE 0413000204

NOTES:

1. FOR ACCURATE RIGHT OF WAY DATA, CONTACT RIGHT OF WAY ENGINEERING AT THE DISTRICT OFFICE.
2. FOR SCHEDULES, SEE SHEET E-139.

Dist	COUNTY	ROUTE	POST MILES TOTAL PROJECT	SHEET No.	TOTAL SHEETS
04	SCL	101,237	45.2/45.8, 2.7/3.3	518	736

6-13-18
REGISTERED CIVIL ENGINEER DATE

6-20-18
PLANS APPROVAL DATE

REGISTERED PROFESSIONAL ENGINEER
KIN Y. CHAN
No. 55391
Exp. 12/31/18
CIVIL
STATE OF CALIFORNIA

THE STATE OF CALIFORNIA OR ITS OFFICERS OR AGENTS SHALL NOT BE RESPONSIBLE FOR THE ACCURACY OR COMPLETENESS OF SCANNED COPIES OF THIS PLAN SHEET.

Y&C TRANSPORTATION CONSULTANTS, INC.
3250 Ramos Circle
Sacramento, CA 95827

VTA
3331 N First St
Building B
San Jose, CA 95134

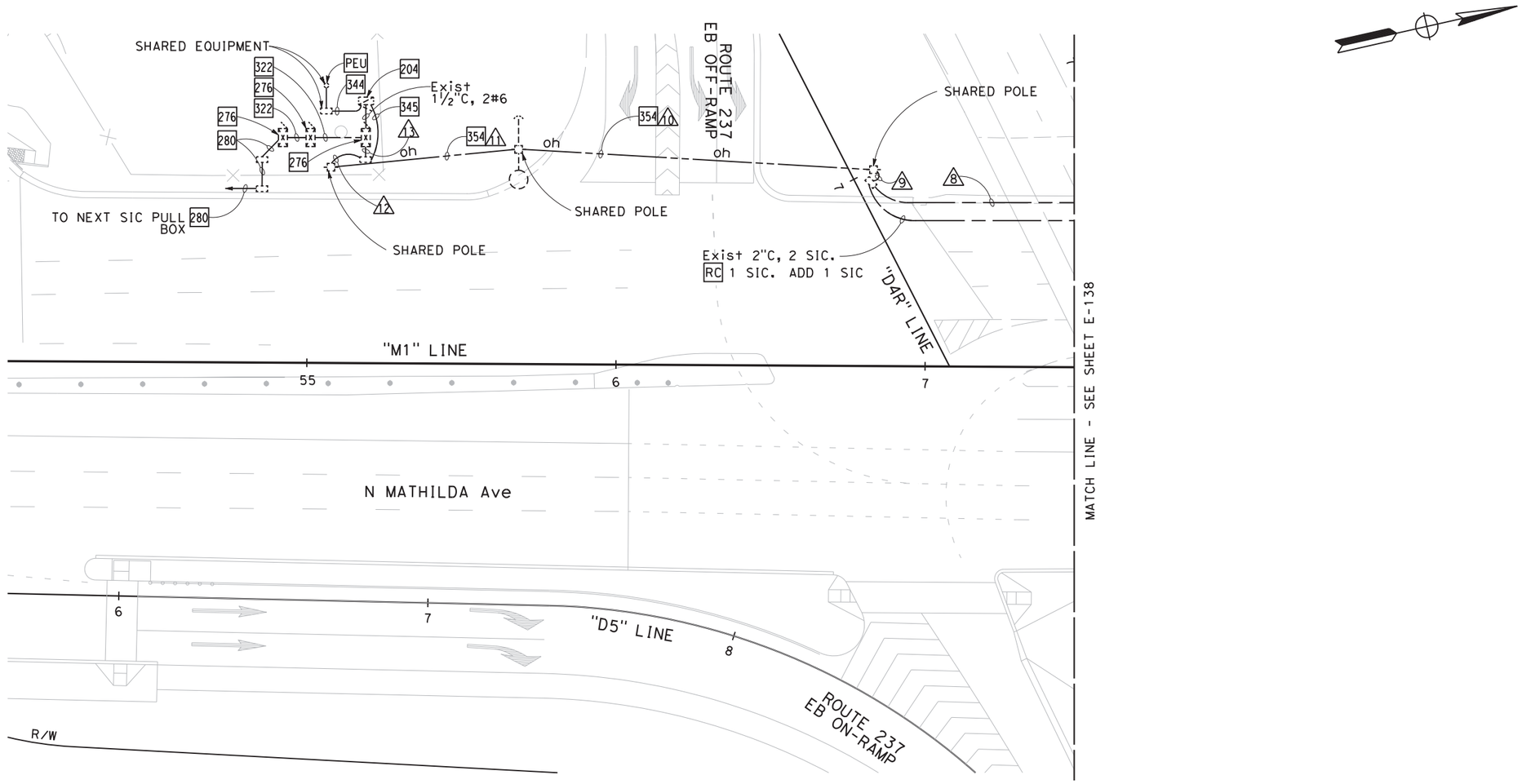

FOR NOTES AND LEGEND, SEE SHEETS E-46 TO E-48

CITY STREET LOCATION 7 (PROPOSED)

APPROVED FOR ELECTRICAL WORK ONLY

TEMPORARY SIGNAL AND LIGHTING (CITY)

(STAGE 2 PHASE 2)

SCALE: 1" = 20'

E-137

STATE OF CALIFORNIA - DEPARTMENT OF TRANSPORTATION
Caltrans
CONSULTANT FUNCTIONAL SUPERVISOR: TIMOTHY J.LEE
CALCULATED-DESIGNED BY: MENG YANG
CHECKED BY: DAN YAU
REVISED BY
DATE REVISED

LAST REVISION 00-00-00
DATE PLOTTED => $DATE
TIME PLOTTED => $TIME

BORDER LAST REVISED 7/2/2010
USERNAME => $USER
DGN FILE => $REQUEST
RELATIVE BORDER SCALE IS IN INCHES 0 1 2 3
UNIT 0712
PROJECT NUMBER & PHASE 0413000204

Dist	COUNTY	ROUTE	POST MILES TOTAL PROJECT	SHEET No.	TOTAL SHEETS
04	SCL	101,237	45.2/45.8, 2.7/3.3	519	736

REGISTERED CIVIL ENGINEER 6-13-18 DATE

6-20-18 PLANS APPROVAL DATE

REGISTERED PROFESSIONAL ENGINEER KIN Y. CHAN No. 55391 Exp. 12/31/18 CIVIL STATE OF CALIFORNIA

THE STATE OF CALIFORNIA OR ITS OFFICERS OR AGENTS SHALL NOT BE RESPONSIBLE FOR THE ACCURACY OR COMPLETENESS OF SCANNED COPIES OF THIS PLAN SHEET.

Y&C TRANSPORTATION CONSULTANTS, INC.
3250 Ramos Circle
Sacramento, CA 95827

VTA
3331 N First St
Building B
San Jose, CA 95134

NOTES:

1. FOR ACCURATE RIGHT OF WAY DATA, CONTACT RIGHT OF WAY ENGINEERING AT THE DISTRICT OFFICE.
2. FOR SCHEDULES, SEE SHEET E-139.

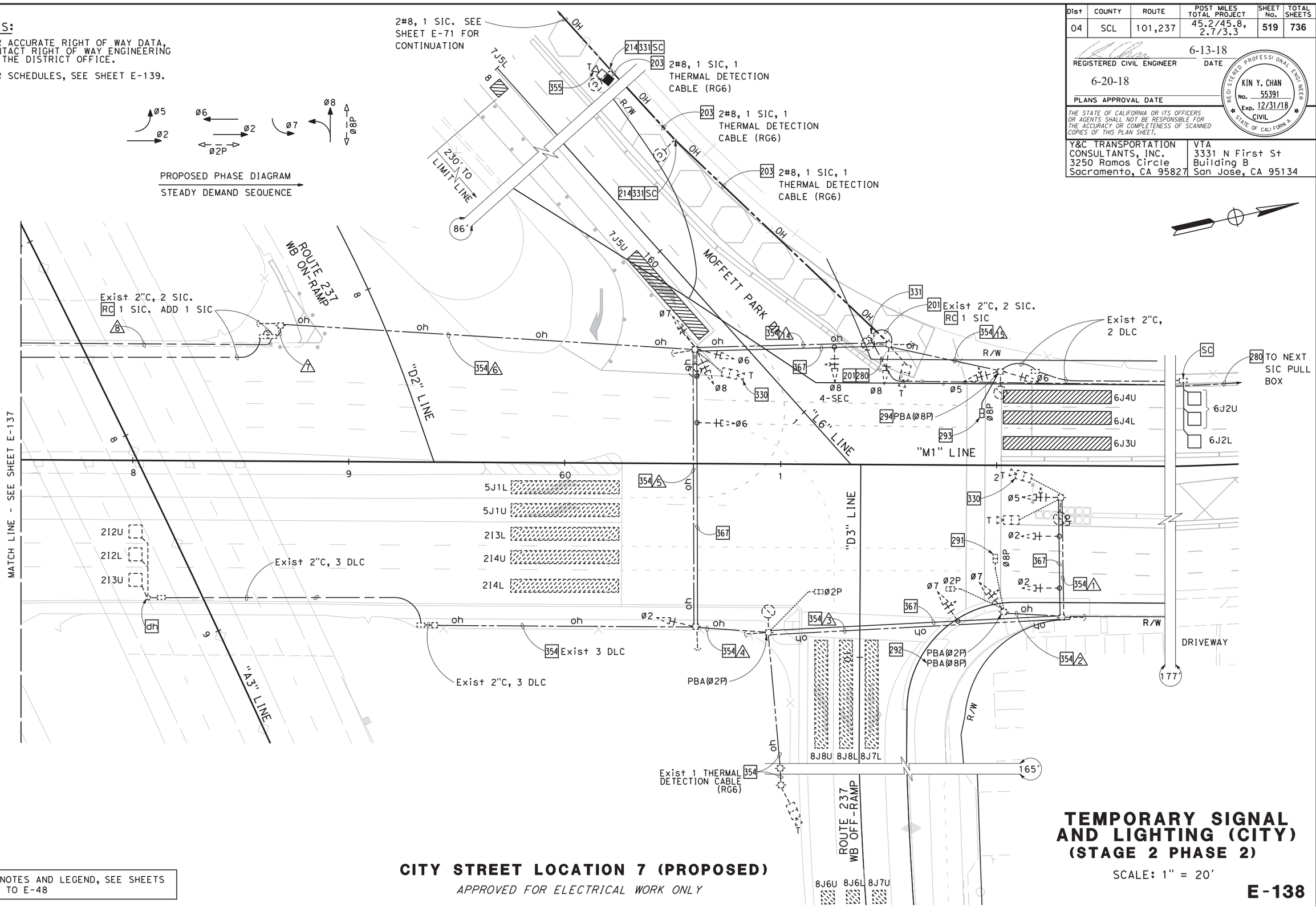

FOR NOTES AND LEGEND, SEE SHEETS E-46 TO E-48

CITY STREET LOCATION 7 (PROPOSED)

APPROVED FOR ELECTRICAL WORK ONLY

TEMPORARY SIGNAL AND LIGHTING (CITY) (STAGE 2 PHASE 2)

SCALE: 1" = 20'

E-138

STATE OF CALIFORNIA - DEPARTMENT OF TRANSPORTATION
Caltrans

CONSULTANT FUNCTIONAL SUPERVISOR: TIMOTHY J. LEE
CALCULATED-DESIGNED BY: MENG YANG
CHECKED BY: DAN YAU
REVISED BY
DATE REVISED

LAST REVISION 00-00-00
DATE PLOTTED => $DATE
TIME PLOTTED => $TIME

BORDER LAST REVISED 7/2/2010
USERNAME => $USER
DGN FILE => $REQUEST
RELATIVE BORDER SCALE IS IN INCHES 0 1 2 3
UNIT 0712
PROJECT NUMBER & PHASE 0413000204

SCHEDULES: (FOR SHEET E-137 & E-138)

CONDUCTOR AND CONDUIT SCHEDULE

CONDUCTOR SCHEDULE	No. OF CONDUCTORS CONDUIT RUN NUMBER														
	/1	/2	/3	/4	/5	/6	/7	/8	/9	/10	/11	/12	/13	/14	/15
No. 14 CONDUCTORS															
Ø2	3		3	3	3	3	3	3	3	3	3	3	3		
Ø5	3		3	3	3	6	6	6	6	6	6	6	6	3	3
Ø6					3+	3	3	3	3	3	3	3	3	3	3
Ø7		3	3	3	3	3	3	3	3	3	3	3	3		
Ø8						3	3	3	3	3	3	3	3		
Ø2P		2	2	2	2	2	2	2	2	2	2	2	2		
Ø8P		2	2	2	2	4	4	4	4	4	4	4	4	2	2+
PBA Ø2P		1	1	1	1	1	1	1	1	1	1	1	1		
PBA Ø8P		1	1	1	1	2	2	2	2	2	2	2	2	1	1+
PBA COMMON		1	1	1	1	2	2	2	2	2	2	2	2	1	1+
SPARES	3	3	3	3	3	6	6	6	6	6	6	6	6	3	3
TOTAL No. 14	9	10	19	19	22	35	35	35	35	35	35	35	35	16	13
No. 8 CONDUCTORS															
LIGHTING	2		2	2	2	2	2	2	2	2	2	2	2	2	2
SIGNAL NEUTRAL	1		1	1	1	1	2	2	2	2	2	2	2	1	1
TOTAL No. 8	3		3	3	3	3	4	4	4	4	4	4	4	3	3
DETECTOR CABLES (DLC)															
2I2U					1	1	1	1	1	1	1	1	1		
2I2L					1	1	1	1	1	1	1	1	1		
2I3U					1	1	1	1	1	1	1	1	1		
6J2U						1	1	1	1	1	1	1	1	1	1
6J2L						1	1	1	1	1	1	1	1	1	1
7J5L						1-	1-	1-	1-	1-	1-	1-	1-	1-	
TOTAL DETECTOR CABLES					3	5	5	5	5	5	5	5	5	2	2
THERMAL VEHICLE DETECTION CABLE (RG6)	2		2	3	3	1+ / 5	1+ / 5	1+ / 5	1+ / 5	1+ / 5	1+ / 5	1+ / 5	1+ / 5	1+ / 1	
SIC						1* / 1	1* / 1		1* / 1	1* / 1	1* / 1	1* / 1	1* / 1	1* / 1	
CONDUIT SIZE (INCHES)	OH	OH	OH	OH	OH	OH	4	2-1/2"	2-1/2"	4	OH	OH	4	OH	3
NEW/EXISTING CONDUIT	E	E	E	E	E	N	E	E	E	E	E	E	E	E	E
% FILL							25	22	24	25			25		8

- REMOVE Exist CONDUCTOR(S)/CABLE(S).
+ ADD NEW CONDUCTOR(S)/CABLE(S).
* REMOVE Exist SIC. INSTALL A NEW SIC.

FOR NOTES AND LEGEND, SEE SHEETS E-46 TO E-48

Dist	COUNTY	ROUTE	POST MILES TOTAL PROJECT	SHEET No.	TOTAL SHEETS
04	SCL	101,237	45.2/45.8, 2.7/3.3	520	736

6-13-18
REGISTERED CIVIL ENGINEER — DATE

6-20-18
PLANS APPROVAL DATE

REGISTERED PROFESSIONAL ENGINEER — KIN Y. CHAN — No. 55391 — Exp. 12/31/18 — CIVIL — STATE OF CALIFORNIA

THE STATE OF CALIFORNIA OR ITS OFFICERS OR AGENTS SHALL NOT BE RESPONSIBLE FOR THE ACCURACY OR COMPLETENESS OF SCANNED COPIES OF THIS PLAN SHEET.

Y&C TRANSPORTATION CONSULTANTS, INC.
3250 Ramos Circle
Sacramento, CA 95827

VTA
3331 N First St
Building B
San Jose, CA 95134

REVISED BY | DATE REVISED
MENG YANG | DAN YAU
CALCULATED-DESIGNED BY | CHECKED BY
CONSULTANT FUNCTIONAL SUPERVISOR: TIMOTHY J. LEE

STATE OF CALIFORNIA - DEPARTMENT OF TRANSPORTATION
Caltrans

TEMPORARY SIGNAL AND LIGHTING (CITY)
(STAGE 2 PHASE 2)

CITY STREET LOCATION 7 (PROPOSED)

APPROVED FOR ELECTRICAL WORK ONLY

E-139

LAST REVISION 00-00-00 | DATE PLOTTED => $DATE | TIME PLOTTED => $TIME

BORDER LAST REVISED 7/2/2010 | USERNAME => $USER | DGN FILE => $REQUEST | RELATIVE BORDER SCALE IS IN INCHES 0 1 2 3 | UNIT 0712 | PROJECT NUMBER & PHASE 0413000204

Dist	COUNTY	ROUTE	POST MILES TOTAL PROJECT	SHEET No.	TOTAL SHEETS
04	SCL	101,237	45.2/45.8, 2.7/3.3	521	736

6-13-18
REGISTERED CIVIL ENGINEER — DATE

6-20-18
PLANS APPROVAL DATE

REGISTERED PROFESSIONAL ENGINEER — KIN Y. CHAN — No. 55391 — Exp. 12/31/18 — CIVIL — STATE OF CALIFORNIA

THE STATE OF CALIFORNIA OR ITS OFFICERS OR AGENTS SHALL NOT BE RESPONSIBLE FOR THE ACCURACY OR COMPLETENESS OF SCANNED COPIES OF THIS PLAN SHEET.

Y&C TRANSPORTATION CONSULTANTS, INC.
3250 Ramos Circle
Sacramento, CA 95827

VTA
3331 N First St
Building B
San Jose, CA 95134

NOTES:

1. FOR ACCURATE RIGHT OF WAY DATA, CONTACT RIGHT OF WAY ENGINEERING AT THE DISTRICT OFFICE.
2. FOR SCHEDULES, SEE SHEET E-141.
3. MAINTAIN EXISTING SIGNAL EQUIPMENT, CONDUIT AND PULL BOXES ON SOUTHWEST CORNER DURING STAGE 2 PHASE 1.

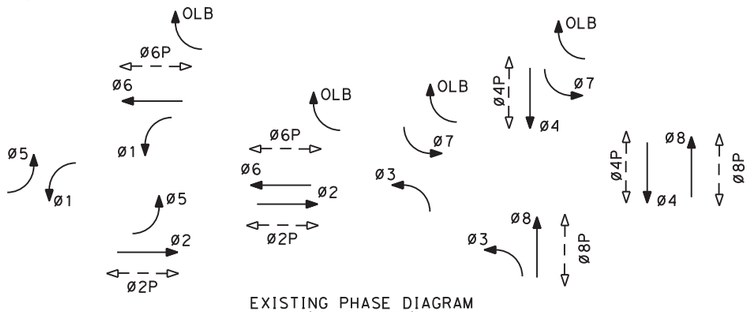

EXISTING PHASE DIAGRAM
(NO CHANGE)

STEADY DEMAND SEQUENCE

OLA TO BE DARK UNLESS ACTIVATED GREEN WITH RAILROAD PRE-EMPTION

OLB = Ø6 + Ø7

OLC TO BE DARK UNLESS ACTIVATED YELLOW AND RED BY FIRE STATION PRE-EMPTION

FIRE STATION PRE-EMPTION PHASE

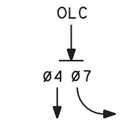

= RED

= SERVICEABLE PHASE

RAILROAD PRE-EMPTION PHASE

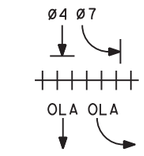

TRACK CLEARANCE PHASE BEFORE LRT ARRIVES

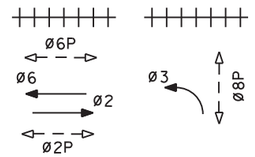

PRE-EMPTION PHASE WITH GATE DOWN

NOTE: RAILROAD PRE-EMPTION TAKES PRECEDENCE OVER FIRE STATION PRE-EMPTION AND EMERGENCY VEHICLE PRE-EMPTION.

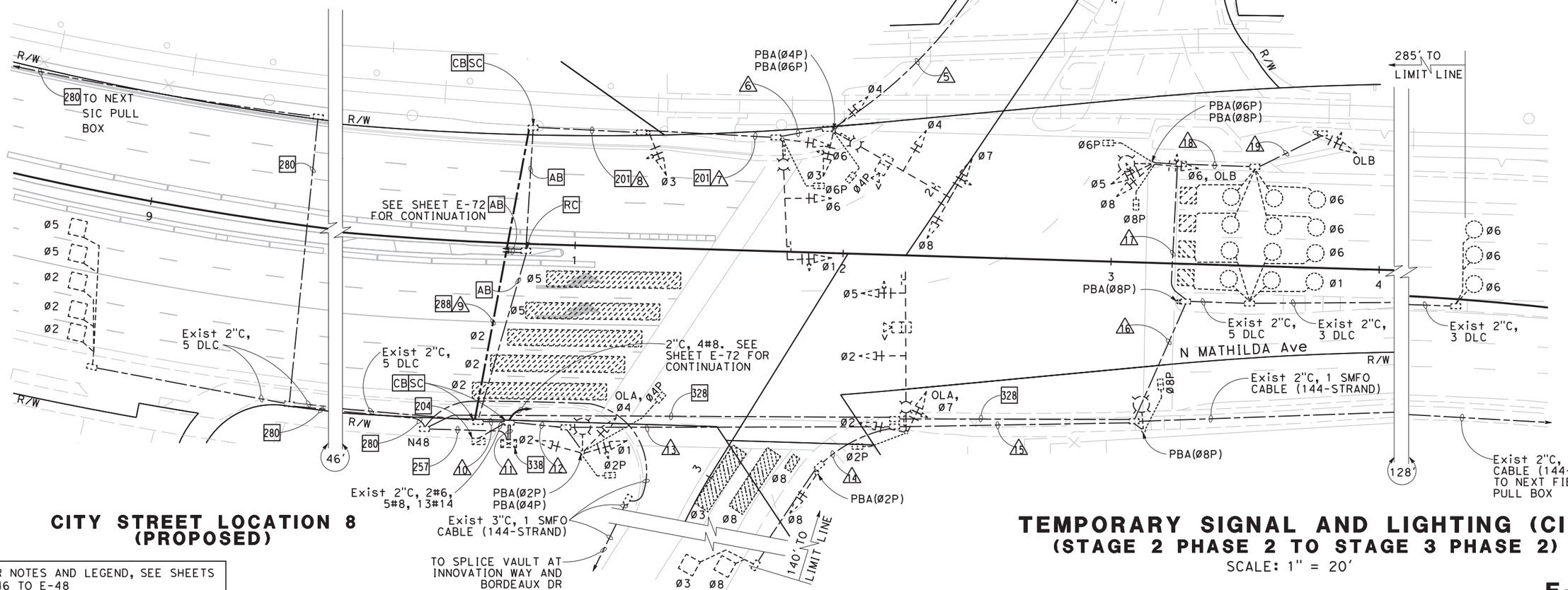

CITY STREET LOCATION 8 (PROPOSED)

FOR NOTES AND LEGEND, SEE SHEETS E-46 TO E-48

TEMPORARY SIGNAL AND LIGHTING (CITY)
(STAGE 2 PHASE 2 TO STAGE 3 PHASE 2)

SCALE: 1" = 20'

APPROVED FOR ELECTRICAL WORK ONLY

E-140

REVISED BY | DATE REVISED
MENG YANG | DAN YAU
CALCULATED-DESIGNED BY | CHECKED BY
CONSULTANT FUNCTIONAL SUPERVISOR: TIMOTHY J.LEE
STATE OF CALIFORNIA - DEPARTMENT OF TRANSPORTATION

LAST REVISION — DATE PLOTTED => $DATE — TIME PLOTTED => $TIME
00-00-00

BORDER LAST REVISED 7/2/2010 | USERNAME => $USER | DGN FILE => $REQUEST | RELATIVE BORDER SCALE IS IN INCHES 0 1 2 3 | UNIT 0712 | PROJECT NUMBER & PHASE 0413000204

SCHEDULES: (FOR SHEET E-140)

CONDUCTOR AND CONDUIT SCHEDULE

CONDUCTOR SCHEDULE	No. OF CONDUCTORS CONDUIT RUN NUMBER																		
	/1	/2	/3	/4	/5	/6	/7	/8	/9	/10	/11	/12	/13	/14	/15	/16	/17	/18	/19
No. 14 CONDUCTORS																			
Ø1							3	3	3	3	6	3							
Ø2											6	6	3						
Ø3						3	3	6	6	6	6								
Ø4					3	6	6	6	6	6	7	1							
Ø5											3	3	3		3	3	3		
Ø6						3	3	3	3	3	6	3	3		3	3	3		
Ø7				3	3	3	3	3	3	3	3								
Ø8						3	3	3	3	3	6	3	3	3	3	3	3		
OLA											3	3	3						
OLB											3	3	3		3	3	3	3	3
OLC	2	2	2		2	2	2	2	2	2	2								
Ø2P											2	2	2						
Ø4P						2	2	2	2	2	4	2							
Ø6P							2	2	2	2	4	2	2		2	2	2		
Ø8P											4	4	4		4	2	2		
PBA Ø2P											2	2	1	1					
PBA Ø4P						1	1	1	1	1	2	1							
PBA Ø6P						1	1	1	1	1	2	1	1		1	1	1		
PBA Ø8P											3	3	3		3	2	1		
FIREHOUSE PREEMPTION			2		2	2	2	2	2	2	2								
PBA COMMON						1	1	1	1	1	2	1	1	1	1	1	1		
IISNS						2	2	2	2	2		2	2						
PEU												3							
SPARES	3	3	3	3	6	6	6	6	6	6	12	6	6	3	3	3	3	3	3
TOTAL No. 14	5	5	7	6	16	35	40	43	43	43	89	53	40	8	26	23	22	6	6
No. 8 CONDUCTORS																			
LIGHTING				2	2	2	2	2	2	2		2	2		2	2	2		
SIGNAL NEUTRAL	1	1	1	1	1	1	1	1	1	1	2	1	1	1	1	1	1	1	1
GROUND	1	1	1	1	1	1	1	1	1	1	1	1	1	1	1	1	1	1	1
TOTAL No. 8	2	2	2	4	4	4	4	4	4	4	3	4	4	2	4	4	4	2	2
No. 6 CONDUCTORS																			
SERVICE TO CONTROLLER											2								
TOTAL No. 6											2								
DETECTOR CABLES (DLC)																			
Ø1											1	1	1		1	1			
Ø2										3	3								
Ø3											1	1	1	1					
Ø4		2*	4*		4*	4*	4*	4*	4	4*	4*								
Ø5										2	2								
Ø6											6	6	6		6	6	2	2	
Ø7		1*	2*		2*	2*	2*	2*	2	2*	2*								
Ø8											1	1	1	1					
TOTAL DETECTOR CABLES		3	6		6	6	6	6	6	11	20	9	9	2	7	7	2	2	
VIDEO DETECTION CABLE (COAX)						1*	1*	1*	1	1*	1+	1	1						
VIDEO DETECTION CABLE (POWER)						1*	1*	1*	1	1*	1+	1	1						
GPS EVUC											1	1							
CONDUIT SIZE (INCHES)	1½	2	2	2	2	2-3"	2-3"	2-3"	2-3"	2-3"	2-3"	2-3"	2-3"	3	3	3	2	2	2
NEW/EXISTING CONDUIT	E	E	E	E	E	E	E	E	N	E	E	E	E	E	E	E	E	E	E
% FILL	11	13	21	11	30	14	15	15	15	21	34	20	18	6	17	17	25	12	7

* REMOVE Exist CONDUCTOR(S)/CABLE(S). ADD NEW CONDUCTOR(S)/CABLE(S).
+ ADD NEW CONDUCTOR(S)/CABLE(S).

FOR NOTES AND LEGEND, SEE SHEETS E-46 TO E-48

Dist	COUNTY	ROUTE	POST MILES TOTAL PROJECT	SHEET No.	TOTAL SHEETS
04	SCL	101,237	45.2/45.8, 2.7/3.3	522	736

6-13-18
REGISTERED CIVIL ENGINEER — DATE

6-20-18
PLANS APPROVAL DATE

REGISTERED PROFESSIONAL ENGINEER — KIN Y. CHAN No. 55391 Exp. 12/31/18 CIVIL — STATE OF CALIFORNIA

THE STATE OF CALIFORNIA OR ITS OFFICERS OR AGENTS SHALL NOT BE RESPONSIBLE FOR THE ACCURACY OR COMPLETENESS OF SCANNED COPIES OF THIS PLAN SHEET.

Y&C TRANSPORTATION CONSULTANTS, INC.
3250 Ramos Circle
Sacramento, CA 95827

VTA
3331 N First St
Building B
San Jose, CA 95134

REVISED BY | DATE REVISED
MENG YANG | DAN YAU
CALCULATED-DESIGNED BY | CHECKED BY
CONSULTANT FUNCTIONAL SUPERVISOR: TIMOTHY J. LEE
STATE OF CALIFORNIA - DEPARTMENT OF TRANSPORTATION

TEMPORARY SIGNAL AND LIGHTING (CITY)
(STAGE 2 PHASE 1 TO STAGE 3 PHASE 2)

CITY STREET LOCATION 8 (PROPOSED)

APPROVED FOR ELECTRICAL WORK ONLY

E-141

LAST REVISION | DATE PLOTTED => $DATE | TIME PLOTTED => $TIME
00-00-00

NOTES:

1. FOR ACCURATE RIGHT OF WAY DATA, CONTACT RIGHT OF WAY ENGINEERING AT THE DISTRICT OFFICE.
2. FOR SCHEDULES, SEE SHEET E-143.

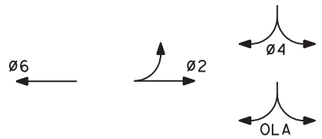

EXISTING PHASE DIAGRAM
STEADY DEMAND SEQUENCE
OLA = ø4+ø4 GREN EXT
GPS EVUD

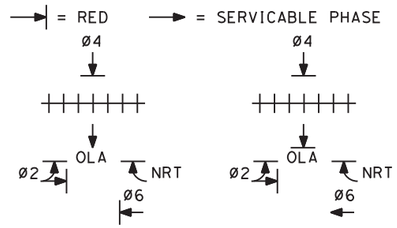

TRACK CLEARANCE PHASE BEFORE LRT ARRIVES

PRE-EMPTION PHASE WITH GATE DOWN

TRACK CLEARANCE EXISTING RAILROAD PRE-EMPTION PHASE

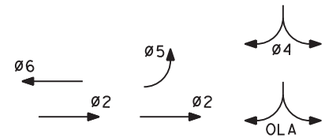

PROPOSED PHASE DIAGRAM
STEADY DEMAND SEQUENCE
OLA = ø4+ø4 GREN EXT
GPS EVUD

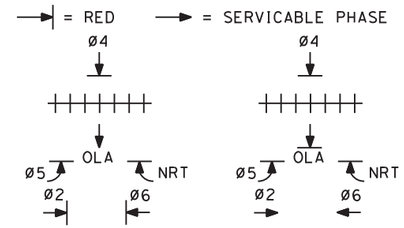

TRACK CLEARANCE PHASE BEFORE LRT ARRIVES

PRE-EMPTION PHASE WITH GATE DOWN

TRACK CLEARANCE PROPOSED RAILROAD PRE-EMPTION PHASE

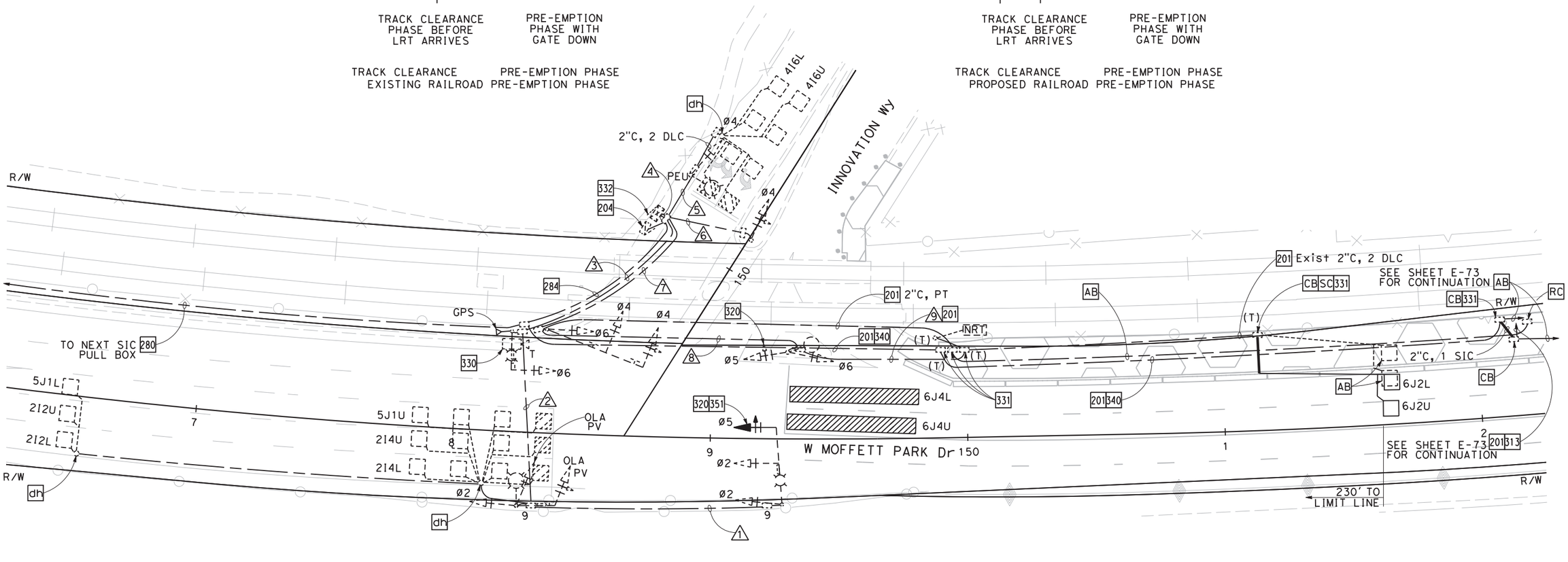

FOR NOTES AND LEGEND, SEE SHEETS E-46 TO E-48

CITY STREET LOCATION 9 (PROPOSED)

APPROVED FOR ELECTRICAL WORK ONLY

TEMPORARY SIGNAL AND LIGHTING (CITY)
(STAGE 2 PHASE 2)

SCALE: 1" = 20'

E-142

Dist	COUNTY	ROUTE	POST MILES TOTAL PROJECT	SHEET No.	TOTAL SHEETS
04	SCL	101,237	45.2/45.8, 2.7/3.3	523	736

K Chan 6-13-18
REGISTERED CIVIL ENGINEER DATE

6-20-18
PLANS APPROVAL DATE

REGISTERED PROFESSIONAL ENGINEER
KIN Y. CHAN
No. 55391
Exp. 12/31/18
CIVIL
STATE OF CALIFORNIA

THE STATE OF CALIFORNIA OR ITS OFFICERS OR AGENTS SHALL NOT BE RESPONSIBLE FOR THE ACCURACY OR COMPLETENESS OF SCANNED COPIES OF THIS PLAN SHEET.

Y&C TRANSPORTATION CONSULTANTS, INC. 3250 Ramos Circle Sacramento, CA 95827	VTA 3331 N First St Building B San Jose, CA 95134

REVISED BY	DATE REVISED

CALCULATED-DESIGNED BY: MENG YANG
CHECKED BY: DAN YAU
CONSULTANT FUNCTIONAL SUPERVISOR: TIMOTHY J. LEE
STATE OF CALIFORNIA - DEPARTMENT OF TRANSPORTATION

DATE PLOTTED => $DATE
TIME PLOTTED => $TIME
LAST REVISION 00-00-00

SCHEDULES: (FOR SHEET E-142)

CONDUCTOR AND CONDUIT SCHEDULE

CONDUCTOR SCHEDULE	No. OF CONDUCTORS — CONDUIT RUN NUMBER 1	2	3	4	5	6	7	8	9
No. 14 CONDUCTORS									
Ø2	3	3	3	3					
Ø4				6	3	3	3		
Ø5#	3	3	3	6			3	3	
Ø6			3	6			3	3	
NRT ACTIVATED BLANK-OUT SIGN				2			2	2	2
OLA		3	3	3					
PEU					3				
SPARES	3	3	3	3	3	3	3	3	3
TOTAL No. 14	9	12	15	29	9	6	14	11	5
No. 10 CONDUCTORS									
IISNS	2	2	2						
LIGHTING	2	2	2		2	2	2	2	
TOTAL No. 10	4	4	4		2	2	2	2	
No. 8 CONDUCTORS									
SIGNAL NEUTRAL	1	1	2	2	1	1	1	1	
TOTAL No. 8	1	1	2	2	1	1	1	1	
No. 6 CONDUCTORS									
CONTROLLER				2					
TOTAL No. 6				2					
DETECTOR CABLES (DLC)									
2I2U		1	1	1					
2I2L		1	1	1					
2I4U		1	1	1					
2I4L		1	1	1					
4I6U				1	1				
4I6L				1	1				
5J1U*		1	1	1					
5J1L*		1	1	1					
6J2U				1			1	1	1
6J2L				1			1	1	1
TOTAL DETECTOR CABLES		6	6	10	2		2	2	2
THERMAL VEHICLE DETECTION CABLE			1	1					
GPS EVUC			1	1					
SIC				1*					
CONDUIT SIZE (INCHES)	2	2	2-1/2"	2-1/2"	2	2	2	2	2
NEW/EXISTING CONDUIT	E	E	E	E	E	E	E	E	E
% FILL	11	26	27	19	13	7	17	15	7

* REMOVE Exist CONDUCTOR(S)/CABLE(S). ADD NEW CONDUCTOR(S)/CABLE(S).
# USE Exist PHASE 2 CONDUCTORS FOR PHASE 5.
* USE Exist PHASE 2I3U AND 2I3L DLCs FOR PHASE 5J1L AND 5J1U.

FOR NOTES AND LEGEND, SEE SHEETS E-46 TO E-48

Dist	COUNTY	ROUTE	POST MILES TOTAL PROJECT	SHEET No.	TOTAL SHEETS
04	SCL	101,237	45.2/45.8, 2.7/3.3	524	736

6-13-18
REGISTERED CIVIL ENGINEER — DATE

6-20-18
PLANS APPROVAL DATE

REGISTERED PROFESSIONAL ENGINEER — KIN Y. CHAN — No. 55391 — Exp. 12/31/18 — CIVIL — STATE OF CALIFORNIA

THE STATE OF CALIFORNIA OR ITS OFFICERS OR AGENTS SHALL NOT BE RESPONSIBLE FOR THE ACCURACY OR COMPLETENESS OF SCANNED COPIES OF THIS PLAN SHEET.

Y&C TRANSPORTATION CONSULTANTS, INC.
3250 Ramos Circle
Sacramento, CA 95827

VTA
3331 N First St
Building B
San Jose, CA 95134

REVISED BY | DATE REVISED
MENG YANG | DAN YAU
CALCULATED-DESIGNED BY | CHECKED BY
CONSULTANT FUNCTIONAL SUPERVISOR: TIMOTHY J.LEE
STATE OF CALIFORNIA - DEPARTMENT OF TRANSPORTATION — Caltrans

CITY STREET LOCATION 9 (PROPOSED)

APPROVED FOR ELECTRICAL WORK ONLY

TEMPORARY SIGNAL AND LIGHTING (CITY)
(STAGE 2 PHASE 2)

E-143

LAST REVISION 00-00-00 | DATE PLOTTED => $DATE | TIME PLOTTED => $TIME

NOTE:

FOR ACCURATE RIGHT OF WAY DATA, CONTACT
RIGHT OF WAY ENGINEERING AT THE DISTRICT OFFICE.

Dist	COUNTY	ROUTE	POST MILES TOTAL PROJECT	SHEET No.	TOTAL SHEETS
04	SCL	101,237	45.2/45.8, 2.7/3.3	525	736

6-13-18
REGISTERED CIVIL ENGINEER — DATE

REGISTERED PROFESSIONAL ENGINEER
KIN Y. CHAN
No. 55391
Exp. 12/31/18
CIVIL
STATE OF CALIFORNIA

6-20-18
PLANS APPROVAL DATE

THE STATE OF CALIFORNIA OR ITS OFFICERS OR AGENTS SHALL NOT BE RESPONSIBLE FOR THE ACCURACY OR COMPLETENESS OF SCANNED COPIES OF THIS PLAN SHEET.

Y&C TRANSPORTATION CONSULTANTS, INC.
3250 Ramos Circle
Sacramento, CA 95827

VTA
3331 N First St
Building B
San Jose, CA 95134

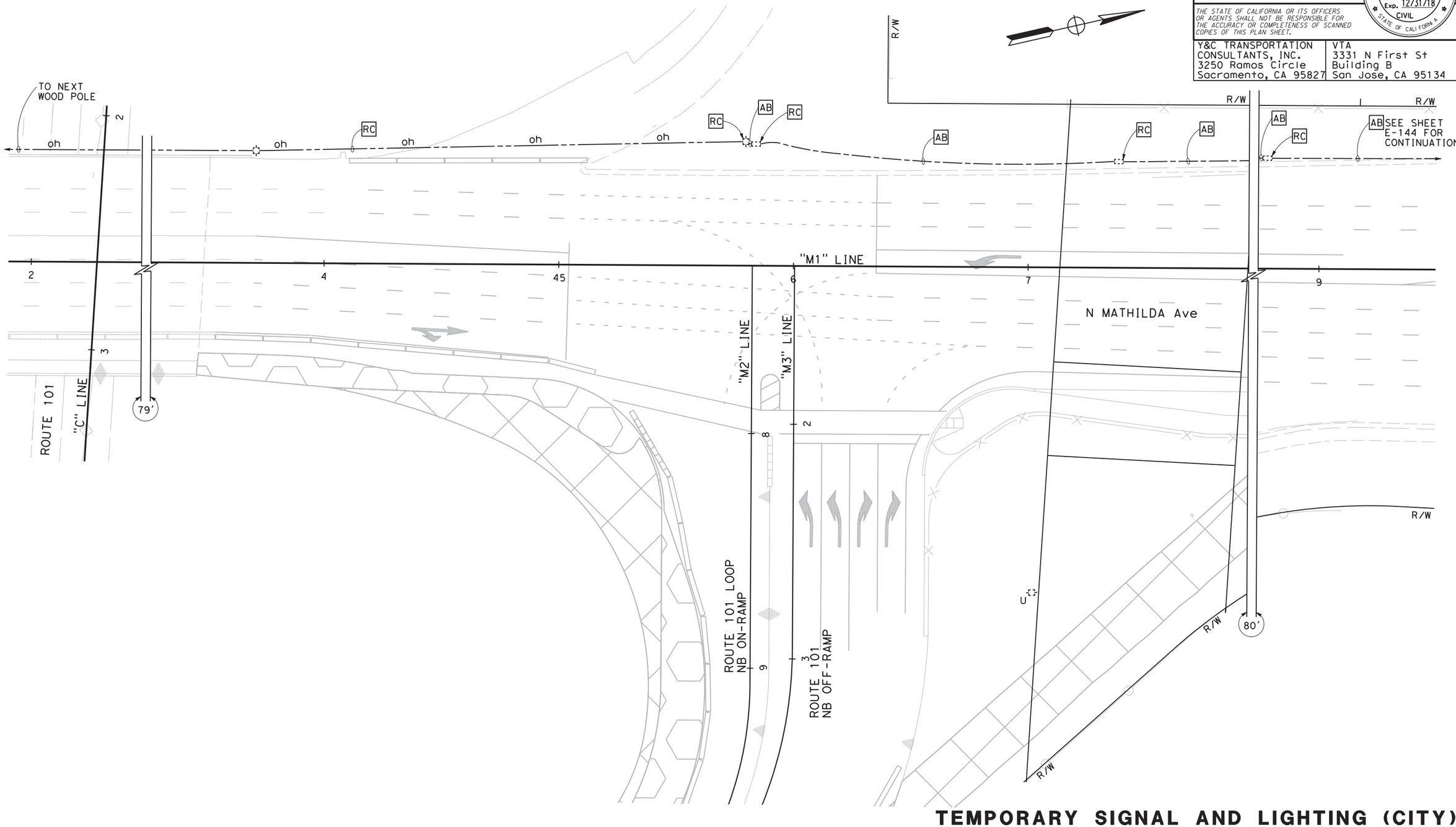

FOR NOTES AND LEGEND, SEE SHEETS E-46 TO E-48

CITY STREET LOCATION 3 (EXISTING)

APPROVED FOR ELECTRICAL WORK ONLY

TEMPORARY SIGNAL AND LIGHTING (CITY)

(STAGE 2 PHASE 3)

SCALE: 1" = 20'

E-144

REVISED BY	DATE REVISED
MENG YANG	DAN YAU
CALCULATED-DESIGNED BY	CHECKED BY
CONSULTANT FUNCTIONAL SUPERVISOR	TIMOTHY J. LEE

STATE OF CALIFORNIA - DEPARTMENT OF TRANSPORTATION
Caltrans

LAST REVISION 00-00-00
DATE PLOTTED => $DATE
TIME PLOTTED => $TIME

BORDER LAST REVISED 7/2/2010
USERNAME => $USER
DGN FILE => $REQUEST
RELATIVE BORDER SCALE IS IN INCHES 0 1 2 3
UNIT 0712
PROJECT NUMBER & PHASE 0413000204

NOTES:

1. FOR ACCURATE RIGHT OF WAY DATA, CONTACT RIGHT OF WAY ENGINEERING AT THE DISTRICT OFFICE.
2. FOR SCHEDULE, SEE SHEET E-146.

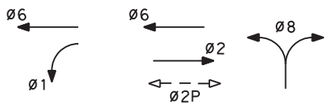

PROPOSED PHASE DIAGRAM
STEADY DEMAND SEQUENCE
GPS EVUD

Dist	COUNTY	ROUTE	POST MILES TOTAL PROJECT	SHEET No.	TOTAL SHEETS
04	SCL	101,237	45.2/45.8, 2.7/3.3	526	736

REGISTERED CIVIL ENGINEER — DATE 6-13-18

KIN Y. CHAN
No. 55391
Exp. 12/31/18
CIVIL
REGISTERED PROFESSIONAL ENGINEER
STATE OF CALIFORNIA

PLANS APPROVAL DATE 6-20-18

THE STATE OF CALIFORNIA OR ITS OFFICERS OR AGENTS SHALL NOT BE RESPONSIBLE FOR THE ACCURACY OR COMPLETENESS OF SCANNED COPIES OF THIS PLAN SHEET.

Y&C TRANSPORTATION CONSULTANTS, INC.
3250 Ramos Circle
Sacramento, CA 95827

VTA
3331 N First St
Building B
San Jose, CA 95134

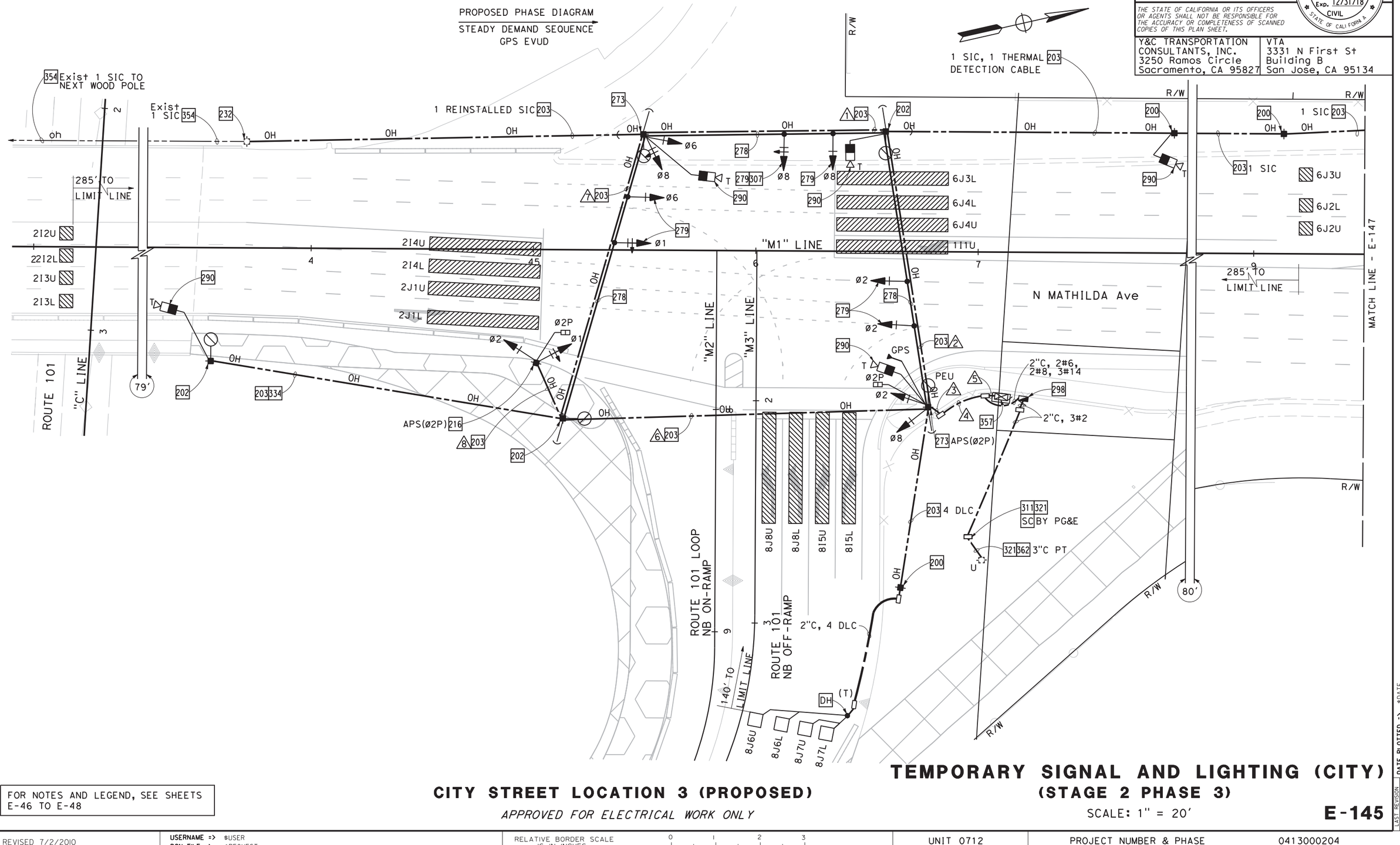

FOR NOTES AND LEGEND, SEE SHEETS E-46 TO E-48

CITY STREET LOCATION 3 (PROPOSED)

APPROVED FOR ELECTRICAL WORK ONLY

TEMPORARY SIGNAL AND LIGHTING (CITY)
(STAGE 2 PHASE 3)

SCALE: 1" = 20'

E-145

STATE OF CALIFORNIA - DEPARTMENT OF TRANSPORTATION — Caltrans

CONSULTANT FUNCTIONAL SUPERVISOR: TIMOTHY J. LEE

CALCULATED-DESIGNED BY: MENG YANG
CHECKED BY: DAN YAU

REVISED BY	DATE REVISED

LAST REVISION 00-00-00
DATE PLOTTED => $DATE
TIME PLOTTED => $TIME

BORDER LAST REVISED 7/2/2010
USERNAME => $USER
DGN FILE => $REQUEST
RELATIVE BORDER SCALE IS IN INCHES 0 1 2 3
UNIT 0712
PROJECT NUMBER & PHASE 0413000204

Dist	COUNTY	ROUTE	POST MILES TOTAL PROJECT	SHEET No.	TOTAL SHEETS
04	SCL	101,237	45.2/45.8, 2.7/3.3	527	736

6-13-18
REGISTERED CIVIL ENGINEER — DATE

6-20-18
PLANS APPROVAL DATE

REGISTERED PROFESSIONAL ENGINEER
KIN Y. CHAN
No. 55391
Exp. 12/31/18
CIVIL
STATE OF CALIFORNIA

THE STATE OF CALIFORNIA OR ITS OFFICERS OR AGENTS SHALL NOT BE RESPONSIBLE FOR THE ACCURACY OR COMPLETENESS OF SCANNED COPIES OF THIS PLAN SHEET.

Y&C TRANSPORTATION CONSULTANTS, INC.
3250 Ramos Circle
Sacramento, CA 95827

VTA
3331 N First St
Building B
San Jose, CA 95134

SCHEDULE: (FOR SHEET E-145)

CONDUCTOR AND CONDUIT SCHEDULE

CONDUCTOR SCHEDULE	No. OF CONDUCTORS — CONDUIT RUN NUMBER 1	2	3	4	5	6	7	8
No. 14 CONDUCTORS								
Ø1			6	6	6	6	3	3
Ø2		3	6	6	6	3		3
Ø6	3	3	3	3	3		3	
Ø8	3	3	3	3	3			
Ø2P			2	2	2	2		2
APS Ø2P			2	2	2	2		2
PEU			3	3				
SPARES	3	3	3	3	3	3	3	3
TOTAL No. 14	9	12	28	28	25	16	9	13
No. 8 CONDUCTORS								
LIGHTING	2	2	2	2		2		
SIGNAL NEUTRAL	1	1	1	1	1	1	1	1
TOTAL No. 8	3	3	3	3	1	3	1	1
No. 6 CONDUCTORS								
CONTROLLER					2			
DETECTOR CABLES (DLC)								
8J6U			1	1	1			
8J6L			1	1	1			
8J7U			1	1	1			
8J7L			1	1	1			
TOTAL DETECTOR CABLES			4	4	4			
THERMAL VEHICLE DETECTION CABLE	1	3	5	5	5	2		1
GPS EVUC			1	1	1			
SIC	1#	1/#	1/#	1/#	1/#	1/#		
CONDUIT SIZE (INCHES)	OH	OH	2-3"	2-3"	2-3"	OH	OH	OH
NEW/EXISTING CONDUIT	N	N	N	N	N	N	N	N
% FILL			21	21	21			

ADD 1 Exist SIC PER NOTE 373.

FOR NOTES AND LEGEND, SEE SHEETS E-46 TO E-48

CITY STREET LOCATION 3 (PROPOSED)

TEMPORARY SIGNAL AND LIGHTING (CITY)
(STAGE 2 PHASE 3)

E-146

MENG YANG — CALCULATED-DESIGNED BY
DAN YAU — CHECKED BY
TIMOTHY J. LEE — CONSULTANT FUNCTIONAL SUPERVISOR
REVISED BY — DATE REVISED
STATE OF CALIFORNIA - DEPARTMENT OF TRANSPORTATION
Caltrans

LAST REVISION 00-00-00 — DATE PLOTTED => $DATE — TIME PLOTTED => $TIME

BORDER LAST REVISED 7/2/2010 | USERNAME => $USER | DGN FILE => $REQUEST | RELATIVE BORDER SCALE IS IN INCHES 0 1 2 3 | UNIT 0712 | PROJECT NUMBER & PHASE 0413000204

NOTES:

1. FOR ACCURATE RIGHT OF WAY DATA, CONTACT RIGHT OF WAY ENGINEERING AT THE DISTRICT OFFICE.
2. FOR SCHEDULE, SEE SHEET E-148.

PROPOSED PHASE DIAGRAM
(NO CHANGE)

STEADY DEMAND SEQUENCE
GPS EVUD
NRT SHALL BE PROGRAMMED TO Ø9P

Dist	COUNTY	ROUTE	POST MILES TOTAL PROJECT	SHEET No.	TOTAL SHEETS
04	SCL	101,237	45.2/45.8, 2.7/3.3	528	736

6-13-18
REGISTERED CIVIL ENGINEER DATE

6-20-18
PLANS APPROVAL DATE

REGISTERED PROFESSIONAL ENGINEER
KIN Y. CHAN
No. 55391
Exp. 12/31/18
CIVIL
STATE OF CALIFORNIA

THE STATE OF CALIFORNIA OR ITS OFFICERS OR AGENTS SHALL NOT BE RESPONSIBLE FOR THE ACCURACY OR COMPLETENESS OF SCANNED COPIES OF THIS PLAN SHEET.

Y&C TRANSPORTATION CONSULTANTS, INC.
3250 Ramos Circle
Sacramento, CA 95827

VTA
3331 N First St
Building B
San Jose, CA 95134

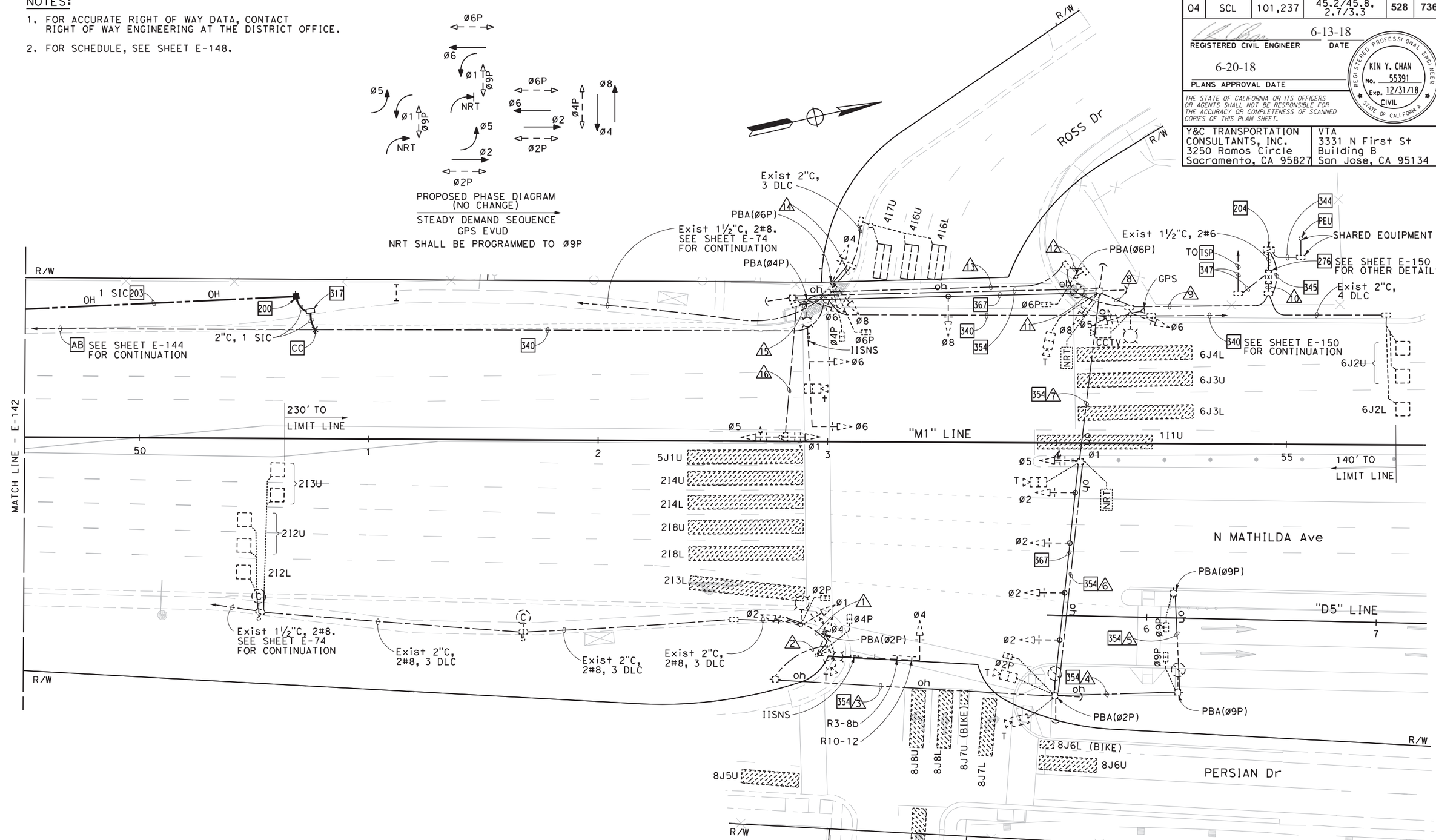

FOR NOTES AND LEGEND, SEE SHEETS E-46 TO E-48

CITY STREET LOCATION 4 (PROPOSED)

APPROVED FOR ELECTRICAL WORK ONLY

TEMPORARY SIGNAL AND LIGHTING (CITY)

(STAGE 2 PHASE 3)

SCALE: 1" = 20'

E-147

STATE OF CALIFORNIA - DEPARTMENT OF TRANSPORTATION
Caltrans

CONSULTANT FUNCTIONAL SUPERVISOR: TIMOTHY J. LEE
CALCULATED-DESIGNED BY: MENG YANG
CHECKED BY: DAN YAU
REVISED BY
DATE REVISED

LAST REVISION 00-00-00
DATE PLOTTED => $DATE
TIME PLOTTED => $TIME

BORDER LAST REVISED 7/2/2010
USERNAME => $USER
DGN FILE => $REQUEST
RELATIVE BORDER SCALE IS IN INCHES 0 1 2 3
UNIT 0712
PROJECT NUMBER & PHASE 0413000204

SCHEDULE: (FOR SHEET E-147)

CONDUCTOR AND CONDUIT SCHEDULE

CONDUCTOR SCHEDULE	No. OF CONDUCTORS CONDUIT RUN NUMBER															
	/1	/2	/3	/4	/5	/6	/7	/8	/9	/10	/11	/12	/13	/14	/15	/16
No. 14 CONDUCTORS																
Ø1	3	3	3			3	3	3	6	6	3		3		3	3
Ø2	3	3	3			3	3	3	3	3						
Ø4		3	3			3	3	3	6	6	3		3	3		
Ø5							3	3	6	6	3		3		3	3
Ø6									3	3	3		3		3	
Ø8								3	6	6	3		3	3		
Ø2P	2	2	2			2	2	2	2	2						
Ø4P		2	2			2	2	2	4	4	2		2	2		
Ø6P									2	2	2	2	2	2		
Ø9P				2	2	2	2	2	2	2						
PBA Ø2P		1	1			1	1	1	1	1						
PBA Ø4P	1	1	1			1	1	1	2	2	1		1		1	
PBA Ø6P									2	2	1	1	1	1		
PBA Ø9P				1	1	1	1	1	1	1						
PBA COMMON	1	1	1	1	1	1	1	1	2	2	1	1	1	1	1	
SPARES	3	3	3	3	3	3	3	3	6	6	3	3	3	3	3	3
TOTAL No. 14	13	19	19	7	7	22	25	28	54	54	25	7	25	15	14	9
No. 10 CONDUCTORS																
NRT SIGN							2	2	2	2						
TOTAL No. 10							2	2	2	2						
No. 8 CONDUCTORS																
LIGHTING & IISNS	2	2	2	2	2	2	2	2	4		2		2		2	
SIGNAL NEUTRAL	1	1	1	1	1	1	1	1	2	2	1	1	1	1	1	1
TOTAL No. 8	3	3	3	3	3	3	3	3	6	2	3	1	3	1	3	1
DETECTOR CABLES (DLC)																
2I2U	1	1	1			1	1	1	1	1						
2I2L	1	1	1			1	1	1	1	1						
2I3U	1	1	1			1	1	1	1	1						
4I6U									1	1	1		1	1		
4I6L									1	1	1		1	1		
4I7U									1	1	1		1	1		
6J2U										1						
6J2L										1						
TOTAL DETECTOR CABLES	3	3	3			3	3	3	6	8	3		3	3		
THERMAL VEHICLE DETECTION CABLE		1	1			3	4	5	6	6	1		1	1	1	
CCTV CABLE										1						
GPS EVUC									1	1						
CONDUIT SIZE (INCHES)	3	OH	OH	OH	OH	OH	OH	4	2-3"	2-3"	3	3	3	3	2	2
NEW/EXISTING CONDUIT	E	E	E	E	E	E	E	E	E	E	E	E	E	E	E	E
% FILL	9						19	26	26	22	3	16	8	22	7	

FOR NOTES AND LEGEND, SEE SHEETS E-46 TO E-48

Dist	COUNTY	ROUTE	POST MILES TOTAL PROJECT	SHEET No.	TOTAL SHEETS
04	SCL	101,237	45.2/45.8, 2.7/3.3	529	736

6-13-18
REGISTERED CIVIL ENGINEER — DATE

6-20-18
PLANS APPROVAL DATE

REGISTERED PROFESSIONAL ENGINEER
KIN Y. CHAN
No. 55391
Exp. 12/31/18
CIVIL
STATE OF CALIFORNIA

THE STATE OF CALIFORNIA OR ITS OFFICERS OR AGENTS SHALL NOT BE RESPONSIBLE FOR THE ACCURACY OR COMPLETENESS OF SCANNED COPIES OF THIS PLAN SHEET.

Y&C TRANSPORTATION CONSULTANTS, INC.
3250 Ramos Circle
Sacramento, CA 95827

VTA
3331 N First St
Building B
San Jose, CA 95134

CALCULATED-DESIGNED BY: MENG YANG
CHECKED BY: DAN YAU
REVISED BY / DATE REVISED
CONSULTANT FUNCTIONAL SUPERVISOR: TIMOTHY J. LEE
STATE OF CALIFORNIA - DEPARTMENT OF TRANSPORTATION

CITY STREET LOCATION 4 (PROPOSED)

TEMPORARY SIGNAL AND LIGHTING (CITY)
(STAGE 2 PHASE 3)

E-148

LAST REVISION 00-00-00
DATE PLOTTED => $DATE
TIME PLOTTED => $TIME

BORDER LAST REVISED 7/2/2010
USERNAME => $USER
DGN FILE => $REQUEST
RELATIVE BORDER SCALE IS IN INCHES 0 1 2 3
UNIT 0712
PROJECT NUMBER & PHASE 0413000204

NOTE:

FOR ACCURATE RIGHT OF WAY DATA, CONTACT RIGHT OF WAY ENGINEERING AT THE DISTRICT OFFICE.

Dist	COUNTY	ROUTE	POST MILES TOTAL PROJECT	SHEET No.	TOTAL SHEETS
04	SCL	101,237	45.2/45.8, 2.7/3.3	530	736

6-13-18
REGISTERED CIVIL ENGINEER DATE

6-20-18
PLANS APPROVAL DATE

REGISTERED PROFESSIONAL ENGINEER
KIN Y. CHAN
No. 55391
Exp. 12/31/18
CIVIL
STATE OF CALIFORNIA

THE STATE OF CALIFORNIA OR ITS OFFICERS OR AGENTS SHALL NOT BE RESPONSIBLE FOR THE ACCURACY OR COMPLETENESS OF SCANNED COPIES OF THIS PLAN SHEET.

Y&C TRANSPORTATION CONSULTANTS, INC.
3250 Ramos Circle
Sacramento, CA 95827

VTA
3331 N First St
Building B
San Jose, CA 95134

ø5 ø6 ø2 ø2 ø7 ø8 ø8P ø2P

EXISTING PHASE DIAGRAM

STEADY DEMAND SEQUENCE

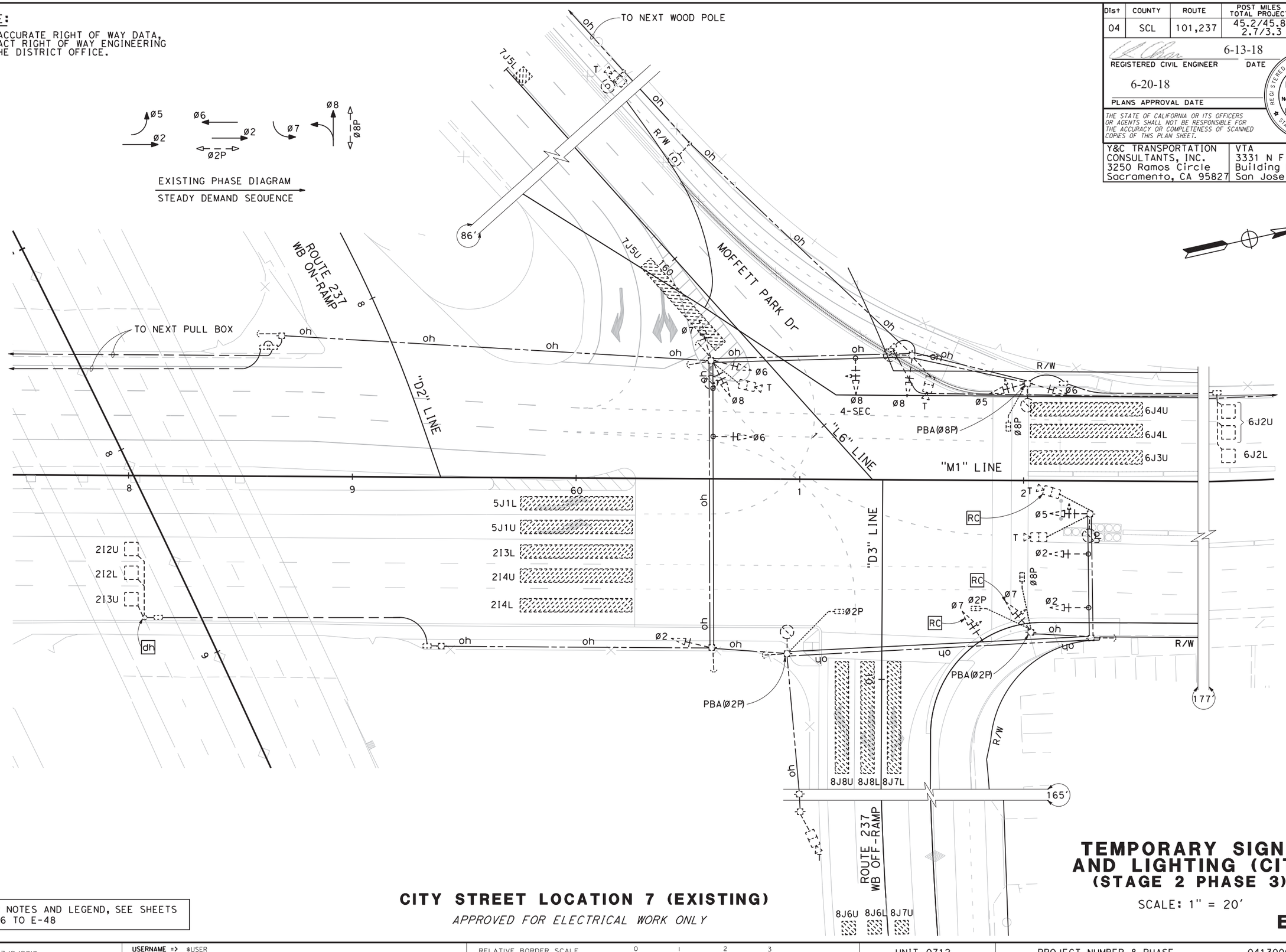

FOR NOTES AND LEGEND, SEE SHEETS E-46 TO E-48

CITY STREET LOCATION 7 (EXISTING)

APPROVED FOR ELECTRICAL WORK ONLY

TEMPORARY SIGNAL AND LIGHTING (CITY) (STAGE 2 PHASE 3)

SCALE: 1" = 20'

E-149

REVISED BY	DATE REVISED
MENG YANG	DAN YAU
CALCULATED-DESIGNED BY	CHECKED BY
CONSULTANT FUNCTIONAL SUPERVISOR	TIMOTHY J. LEE

STATE OF CALIFORNIA - DEPARTMENT OF TRANSPORTATION

Caltrans

LAST REVISION: DATE PLOTTED => $DATE TIME PLOTTED => $TIME
00-00-00

BORDER LAST REVISED 7/2/2010

USERNAME => $USER
DGN FILE => $REQUEST

RELATIVE BORDER SCALE IS IN INCHES 0 1 2 3

UNIT 0712

PROJECT NUMBER & PHASE 0413000204

NOTES:

1. FOR ACCURATE RIGHT OF WAY DATA, CONTACT RIGHT OF WAY ENGINEERING AT THE DISTRICT OFFICE.
2. FOR SCHEDULES, SEE SHEET E-152.

Dist	COUNTY	ROUTE	POST MILES TOTAL PROJECT	SHEET No.	TOTAL SHEETS
04	SCL	101,237	45.2/45.8, 2.7/3.3	531	736

6-13-18
REGISTERED CIVIL ENGINEER — DATE

6-20-18
PLANS APPROVAL DATE

REGISTERED PROFESSIONAL ENGINEER
KIN Y. CHAN
No. 55391
Exp. 12/31/18
CIVIL
STATE OF CALIFORNIA

THE STATE OF CALIFORNIA OR ITS OFFICERS OR AGENTS SHALL NOT BE RESPONSIBLE FOR THE ACCURACY OR COMPLETENESS OF SCANNED COPIES OF THIS PLAN SHEET.

Y&C TRANSPORTATION CONSULTANTS, INC.
3250 Ramos Circle
Sacramento, CA 95827

VTA
3331 N First St
Building B
San Jose, CA 95134

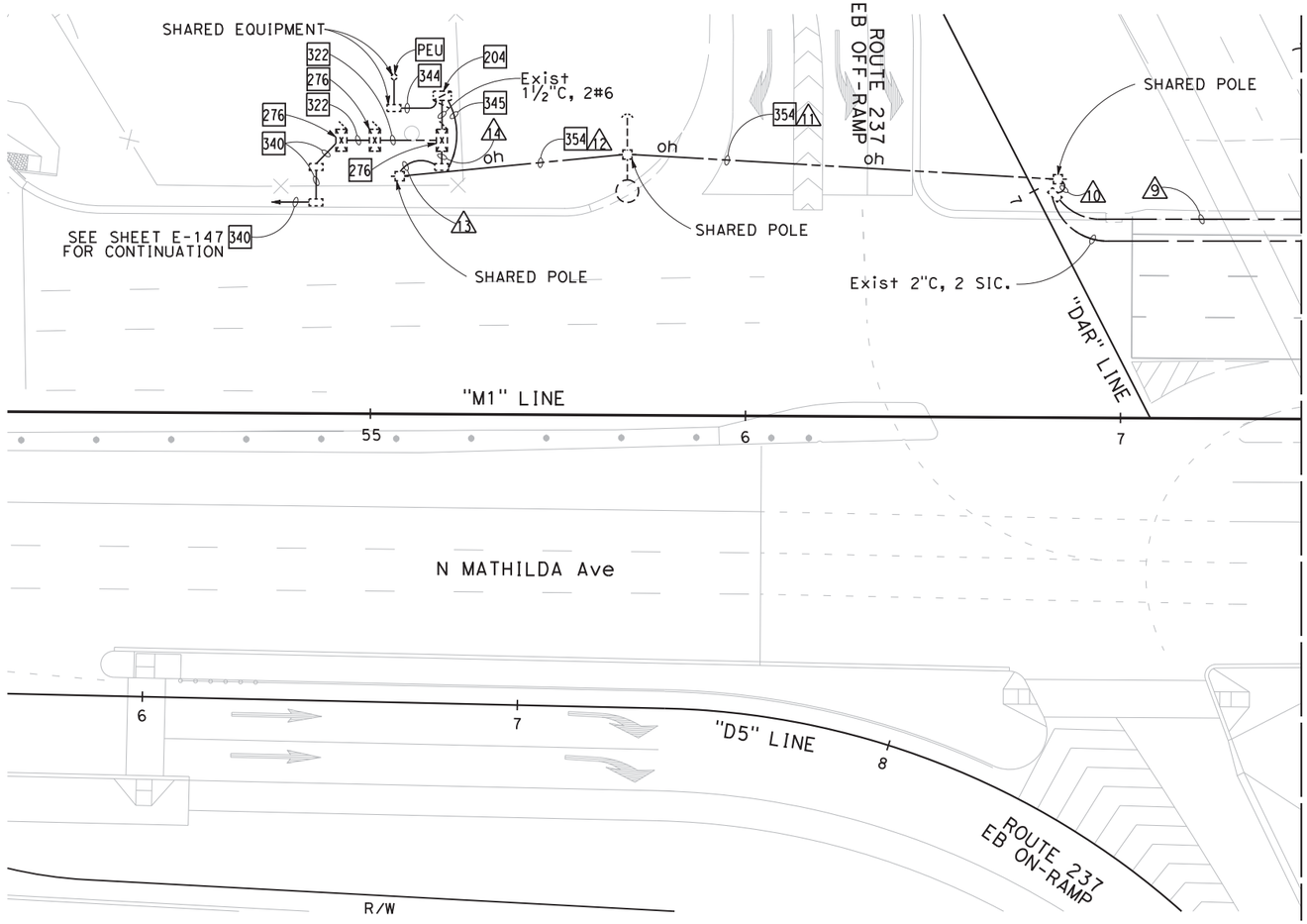

FOR NOTES AND LEGEND, SEE SHEETS E-46 TO E-48

CITY STREET LOCATION 7 (PROPOSED)

APPROVED FOR ELECTRICAL WORK ONLY

TEMPORARY SIGNAL AND LIGHTING (CITY)

(STAGE 2 PHASE 3 TO STAGE 3 PHASE 2)

SCALE: 1" = 20'

E-150

REVISED BY	MENG YANG
DATE REVISED	DAN YAU
CALCULATED-DESIGNED BY	
CHECKED BY	
CONSULTANT FUNCTIONAL SUPERVISOR	TIMOTHY J.LEE

STATE OF CALIFORNIA - DEPARTMENT OF TRANSPORTATION
Caltrans

DATE PLOTTED => $DATE
TIME PLOTTED => $TIME
LAST REVISION 00-00-00

BORDER LAST REVISED 7/2/2010 | USERNAME => $USER | DGN FILE => $REQUEST | RELATIVE BORDER SCALE IS IN INCHES 0 1 2 3 | UNIT 0712 | PROJECT NUMBER & PHASE 0413000204

NOTES:

1. FOR ACCURATE RIGHT OF WAY DATA, CONTACT RIGHT OF WAY ENGINEERING AT THE DISTRICT OFFICE.
2. FOR SCHEDULES, SEE SHEET E-152.

Dist	COUNTY	ROUTE	POST MILES TOTAL PROJECT	SHEET No.	TOTAL SHEETS
04	SCL	101,237	45.2/45.8, 2.7/3.3	532	736

6-13-18
REGISTERED CIVIL ENGINEER DATE

6-20-18
PLANS APPROVAL DATE

REGISTERED PROFESSIONAL ENGINEER
KIN Y. CHAN
No. 55391
Exp. 12/31/18
CIVIL
STATE OF CALIFORNIA

THE STATE OF CALIFORNIA OR ITS OFFICERS OR AGENTS SHALL NOT BE RESPONSIBLE FOR THE ACCURACY OR COMPLETENESS OF SCANNED COPIES OF THIS PLAN SHEET.

Y&C TRANSPORTATION CONSULTANTS, INC.
3250 Ramos Circle
Sacramento, CA 95827

VTA
3331 N First St
Building B
San Jose, CA 95134

PROPOSED PHASE DIAGRAM
STEADY DEMAND SEQUENCE

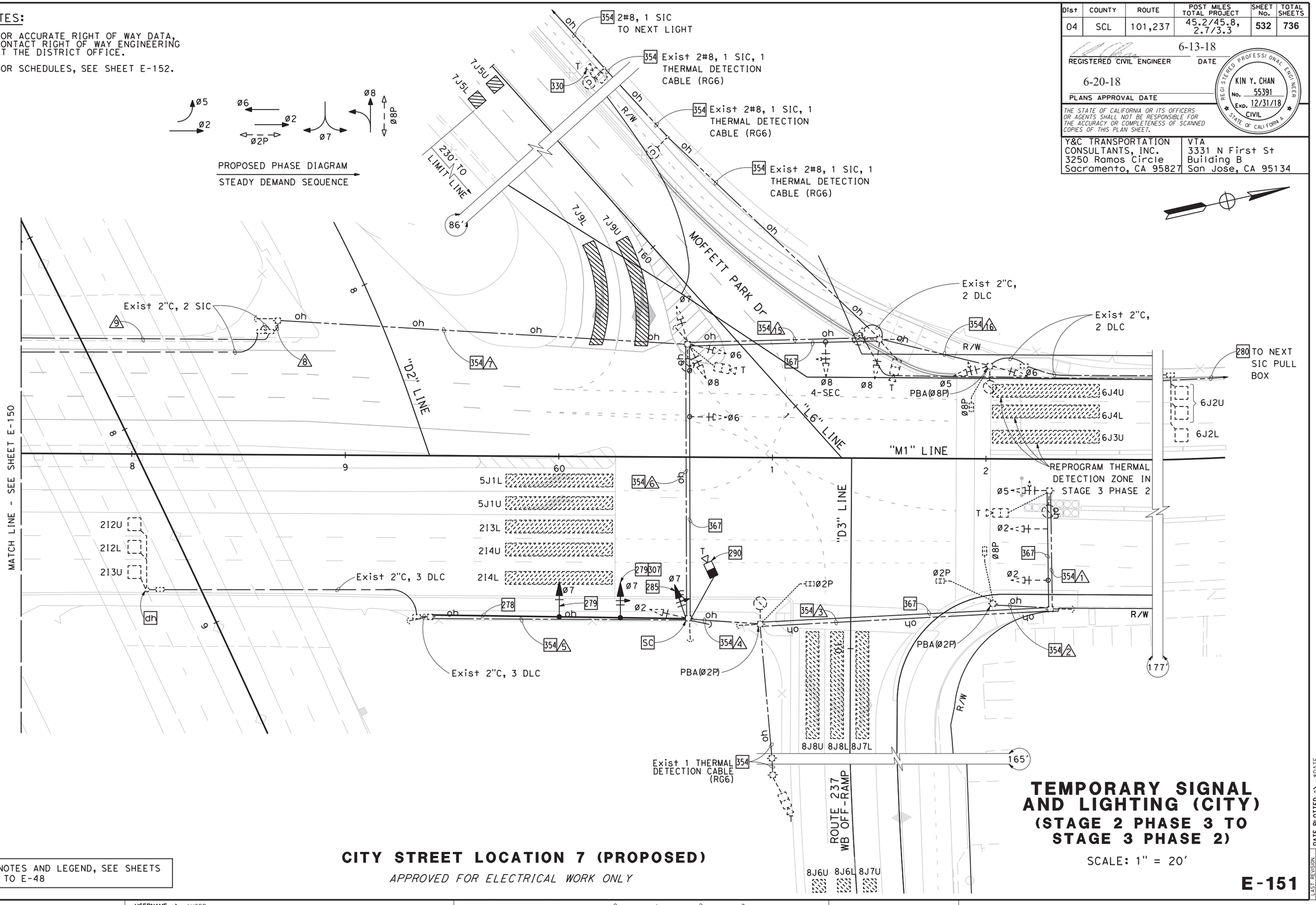

FOR NOTES AND LEGEND, SEE SHEETS E-46 TO E-48

CITY STREET LOCATION 7 (PROPOSED)

APPROVED FOR ELECTRICAL WORK ONLY

TEMPORARY SIGNAL AND LIGHTING (CITY)
(STAGE 2 PHASE 3 TO STAGE 3 PHASE 2)

SCALE: 1" = 20'

E-151

REVISED BY | DATE REVISED
MENG YANG | DAN YAU
CALCULATED-DESIGNED BY | CHECKED BY
CONSULTANT FUNCTIONAL SUPERVISOR: TIMOTHY J.LEE
STATE OF CALIFORNIA - DEPARTMENT OF TRANSPORTATION

LAST REVISION 00-00-00 | DATE PLOTTED => $DATE | TIME PLOTTED => $TIME

BORDER LAST REVISED 7/2/2010 | USERNAME => $USER | DGN FILE => $REQUEST | RELATIVE BORDER SCALE IS IN INCHES 0 1 2 3 | UNIT 0712 | PROJECT NUMBER & PHASE 0413000204

SCHEDULES: (FOR SHEET E-150 & E-151)

CONDUCTOR AND CONDUIT SCHEDULE

CONDUCTOR SCHEDULE	No. OF CONDUCTORS CONDUIT RUN NUMBER 1	2	3	4	5	6	7	8	9	10	11	12	13	14	15	16
No. 14 CONDUCTORS																
Ø2	3		3	3		3	3	3	3	3	3	3	3			
Ø5	3		3	3		3	6	6	6	6	6	6	6	6	3	3
Ø6						3	3	3	3	3	3	3	3	3	3	3
Ø7			3-	3-	3	3	3	3	3	3	3	3	3	3		
Ø8							3	3	3	3	3	3	3	3	3	
Ø2P		2	2	2		2	2	2	2	2	2	2	2	2		
Ø8P		2	2	2		2	4	4	4	4	4	4	4	4	2	2
PBA Ø2P		1	1	1		1	1	1	1	1	1	1	1	1		
PBA Ø8P		1	1	1		1	2	2	2	2	2	2	2	2	1	1
PBA COMMON		1	1	1		1	2	2	2	2	2	2	2	2	1	1
SPARES	3	3	3	3	3	3	6	6	6	6	6	6	6	6	3	3
TOTAL No. 14	9	10	16	16	6	22	35	35	35	35	35	35	35	35	16	13
No. 8 CONDUCTORS																
LIGHTING	2		2	2		2	2	2	2	2	2	2	2	2	2	2
SIGNAL NEUTRAL	1		1	1	1	1	1	2	2	2	2	2	2	2	1	1
TOTAL No. 8	3		3	3	1	3	3	4	4	4	4	4	4	4	3	3
DETECTOR CABLES (DLC)																
2I2U						1	1	1	1	1	1	1	1	1		
2I2L						1	1	1	1	1	1	1	1	1		
2I3U						1	1	1	1	1	1	1	1	1		
6J2U								1	1	1	1	1	1	1	1	1
6J2L								1	1	1	1	1	1	1	1	1
TOTAL DETECTOR CABLES						3	3	5	5	5	5	5	5	5	2	2
THERMAL VEHICLE DETECTION CABLE (RG6)	1/T		1/T	1/T		3	6	6	6	6	6	6	6	6	1	
SIC							2	2		2	2	2	2	2	1	
CONDUIT SIZE (INCHES)	OH	OH	OH	OH	OH	OH	OH	4	2-3"	2-3"	4	OH	OH	4	OH	3
NEW/EXISTING CONDUIT	E	E	E	E	N	E	E	E	E	E	E	E	E	E	E	E
% FILL								24	33	35	24			24		6

- REMOVE Exist CONDUCTOR(S)/CABLE(S).

Dist	COUNTY	ROUTE	POST MILES TOTAL PROJECT	SHEET No.	TOTAL SHEETS
04	SCL	101,237	45.2/45.8, 2.7/3.3	533	736

6-13-18
REGISTERED CIVIL ENGINEER DATE

6-20-18
PLANS APPROVAL DATE

REGISTERED PROFESSIONAL ENGINEER
KIN Y. CHAN
No. 55391
Exp. 12/31/18
CIVIL
STATE OF CALIFORNIA

THE STATE OF CALIFORNIA OR ITS OFFICERS OR AGENTS SHALL NOT BE RESPONSIBLE FOR THE ACCURACY OR COMPLETENESS OF SCANNED COPIES OF THIS PLAN SHEET.

Y&C TRANSPORTATION CONSULTANTS, INC.
3250 Ramos Circle
Sacramento, CA 95827

VTA
3331 N First St
Building B
San Jose, CA 95134

REVISED BY | DATE REVISED
MENG YANG | DAN YAU
CALCULATED-DESIGNED BY | CHECKED BY
CONSULTANT FUNCTIONAL SUPERVISOR: TIMOTHY J. LEE

STATE OF CALIFORNIA - DEPARTMENT OF TRANSPORTATION
Caltrans

FOR NOTES AND LEGEND, SEE SHEETS E-46 TO E-48

CITY STREET LOCATION 7 (PROPOSED)

APPROVED FOR ELECTRICAL WORK ONLY

TEMPORARY SIGNAL AND LIGHTING (CITY)
(STAGE 2 PHASE 3 TO STAGE 3 PHASE 2)

E-152

LAST REVISION 00-00-00 | DATE PLOTTED => $DATE | TIME PLOTTED => $TIME

BORDER LAST REVISED 7/2/2010 | USERNAME => $USER | DGN FILE => $REQUEST | RELATIVE BORDER SCALE IS IN INCHES 0 1 2 3 | UNIT 0712 | PROJECT NUMBER & PHASE 0413000204

NOTES:

1. FOR ACCURATE RIGHT OF WAY DATA, CONTACT RIGHT OF WAY ENGINEERING AT THE DISTRICT OFFICE.
2. FOR SCHEDULE, SEE SHEET E-154.

EXISTING PHASE DIAGRAM
STEADY DEMAND SEQUENCE
GPS EVUD

PROPOSED PHASE DIAGRAM
STEADY DEMAND SEQUENCE
GPS EVUD
NRT SHALL BE PROGRAMMED TO Ø8P

Dist	COUNTY	ROUTE	POST MILES TOTAL PROJECT	SHEET No.	TOTAL SHEETS
04	SCL	101,237	45.2/45.8, 2.7/3.3	534	736

REGISTERED CIVIL ENGINEER — DATE 6-13-18

PLANS APPROVAL DATE 6-20-18

KIN Y. CHAN No. 55391 Exp. 12/31/18 CIVIL — REGISTERED PROFESSIONAL ENGINEER — STATE OF CALIFORNIA

THE STATE OF CALIFORNIA OR ITS OFFICERS OR AGENTS SHALL NOT BE RESPONSIBLE FOR THE ACCURACY OR COMPLETENESS OF SCANNED COPIES OF THIS PLAN SHEET.

Y&C TRANSPORTATION CONSULTANTS, INC.
3250 Ramos Circle
Sacramento, CA 95827

VTA
3331 N First St
Building B
San Jose, CA 95134

EASEMENT
R/W
SEE DETAIL A ON THIS SHEET
Exist 2"C, 2#8
ALMANOR Ave
APS(Ø4P)
GPS
IISNS
PEU
Exist 2"C, 3 DLC, 1 SIC
R3-5
R3-8a
280 TO NEXT PB
R73-2 (CA)
Exist 2"C, 3 DLC, 1 SIC
"M1" LINE
Exist 2"C, 3 DLC, 1 SIC
264'
APS(Ø6P)
APS(Ø4P)
IISNS
CCTV
APS(Ø8P) 216
N MATHILDA Ave
APS(Ø6P)
Exist 2"C, 2#8
AHWANEE Ave
354 Exist 2#8, 4 DLC, 1 SIC
354 Exist 4 DLC, 1 SIC
Exist 1 SIC TO NEXT WOOD POLE 354
Exist 2"C, 4 DLC
285' TO LIMIT LINE
SC
259
273 APS(Ø8P)
203/1
203/2
2I4U
2I3U
2I2L
2I2U
5J1U
111U
6J2U
6J2L
6J3U
6J4L
8J6L
8J6U
315U

DETAIL A
SCALE: 1" = 10'

Exist PG&E SERVICE POINT

FOR NOTES AND LEGEND, SEE SHEETS E-46 TO E-48

CITY STREET LOCATION 1 (PROPOSED)

APPROVED FOR ELECTRICAL WORK ONLY

TEMPORARY SIGNAL AND LIGHTING (CITY)
(STAGE 2 PHASE 4 TO STAGE 3 PHASE 1)

SCALE: 1" = 20'

E-153

REVISED BY | DATE REVISED
MENG YANG | DAN YAU
CALCULATED-DESIGNED BY | CHECKED BY
CONSULTANT FUNCTIONAL SUPERVISOR: TIMOTHY J. LEE
STATE OF CALIFORNIA - DEPARTMENT OF TRANSPORTATION

LAST REVISION 00-00-00 | DATE PLOTTED => $DATE | TIME PLOTTED => $TIME

BORDER LAST REVISED 7/2/2010 | USERNAME => $USER | DGN FILE => $REQUEST | RELATIVE BORDER SCALE IS IN INCHES 0 1 2 3 | UNIT 0712 | PROJECT NUMBER & PHASE 0413000204

SCHEDULE: (FOR SHEET E-153)

CONDUCTOR AND CONDUIT SCHEDULE

CONDUCTOR SCHEDULE	No. OF CONDUCTORS CONDUIT RUN NUMBER										
	1	2	3	4	5	6	7	8	9	10	11
No. 14 CONDUCTORS											
Ø1				3	3	3	3				
Ø2					3	3	6	3			
Ø3						3	6	3			
Ø4							3	3	3	3	
Ø5				3	3	3	6	3	3	3	3
Ø6			3	3	3	3	6		3	3	3
Ø7			3	3	3	3	6		3	3	
Ø8						3	3				
Ø4P							2	2	2	2	
Ø6P			2	2	2	2	4		2	2	
Ø8P	2	2	2+	2+	2+	2+	2+				
IISNS				2	2	2		2	2	2	
PEU								3			
SPARES	3	3	3	3	3	3	6	3	3	3	3
TOTAL No. 14	5	5	13	21	24	30	53	22	21	21	9
No. 12 CONDUCTORS											
APS Ø4P							2	2	2	2	2
APS Ø6P			2	2	2	2	4		2	2	2
APS Ø8P	2	2	2+	2+	2+	2+	2+				
TOTAL No. 12	2	2	4	4	4	8	2	4	4	4	
No. 10 CONDUCTORS											
NRT ACTIVATED BLANK-OUT SIGN			2+	2+	2+	2+	2+				
TOTAL No. 8			2	2	2	2	2				
No. 8 CONDUCTORS											
LIGHTING	2	2	2	2	2	2		2	2	2	
SIGNAL NEUTRAL	1	1	1	1	1	1	1	1	1	1	
TOTAL No. 8	3	3	3	3	3	3	1	3	3	3	
DETECTOR CABLES (DLC)											
Ø2					4	4	4				
Ø6							3				
TOTAL DETECTOR CABLES					4	4	7				
THERMAL VEHICLE DETECTION CABLE				1	1	2	4	1	1	1	
CCTV CABLE				1	1	1	1				
GPS EVUC							1	1			
SIC					1	1					
CONDUIT SIZE (INCHES)	OH	OH	OH	OH	3	2-2"	2-3"	2	2	2	2
NEW/EXISTING CONDUIT	N	N	E	E	E	E	E	E	E	E	E
% FILL					21	35	25	32	29	29	9

+ ADD NEW CONDUCTOR(S)/CABLE(S).

FOR NOTES AND LEGEND, SEE SHEETS E-46 TO E-48

CITY STREET LOCATION 1 (PROPOSED)

TEMPORARY SIGNAL AND LIGHTING (CITY)
(STAGE 2 PHASE 4 TO STAGE 3 PHASE 1)

E-154

Dist	COUNTY	ROUTE	POST MILES TOTAL PROJECT	SHEET No.	TOTAL SHEETS
04	SCL	101,237	45.2/45.8, 2.7/3.3	535	736

6-13-18
REGISTERED CIVIL ENGINEER — DATE

6-20-18
PLANS APPROVAL DATE

REGISTERED PROFESSIONAL ENGINEER — KIN Y. CHAN — No. 55391 — Exp. 12/31/18 — CIVIL — STATE OF CALIFORNIA

THE STATE OF CALIFORNIA OR ITS OFFICERS OR AGENTS SHALL NOT BE RESPONSIBLE FOR THE ACCURACY OR COMPLETENESS OF SCANNED COPIES OF THIS PLAN SHEET.

Y&C TRANSPORTATION CONSULTANTS, INC. 3250 Ramos Circle Sacramento, CA 95827	VTA 3331 N First St Building B San Jose, CA 95134

REVISED BY | DATE REVISED
MENG YANG | DAN YAU
CALCULATED-DESIGNED BY | CHECKED BY
CONSULTANT FUNCTIONAL SUPERVISOR: TIMOTHY J. LEE
STATE OF CALIFORNIA - DEPARTMENT OF TRANSPORTATION — Caltrans

LAST REVISION 00-00-00 | DATE PLOTTED => $DATE | TIME PLOTTED => $TIME

BORDER LAST REVISED 7/2/2010 | USERNAME => $USER | DGN FILE => $REQUEST | RELATIVE BORDER SCALE IS IN INCHES 0 1 2 3 | UNIT 0712 | PROJECT NUMBER & PHASE 0413000204

NOTE:

FOR ACCURATE RIGHT OF WAY DATA, CONTACT
RIGHT OF WAY ENGINEERING AT THE DISTRICT OFFICE.

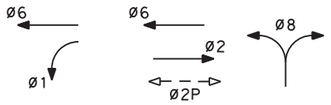

EXISTING PHASE DIAGRAM
STEADY DEMAND SEQUENCE
GPS EVUD

Dist	COUNTY	ROUTE	POST MILES TOTAL PROJECT	SHEET No.	TOTAL SHEETS
04	SCL	101,237	45.2/45.8, 2.7/3.3	536	736

REGISTERED CIVIL ENGINEER — DATE 6-13-18

KIN Y. CHAN
No. 55391
Exp. 12/31/18
CIVIL
REGISTERED PROFESSIONAL ENGINEER
STATE OF CALIFORNIA

PLANS APPROVAL DATE 6-20-18

THE STATE OF CALIFORNIA OR ITS OFFICERS OR AGENTS SHALL NOT BE RESPONSIBLE FOR THE ACCURACY OR COMPLETENESS OF SCANNED COPIES OF THIS PLAN SHEET.

Y&C TRANSPORTATION CONSULTANTS, INC.
3250 Ramos Circle
Sacramento, CA 95827

VTA
3331 N First St
Building B
San Jose, CA 95134

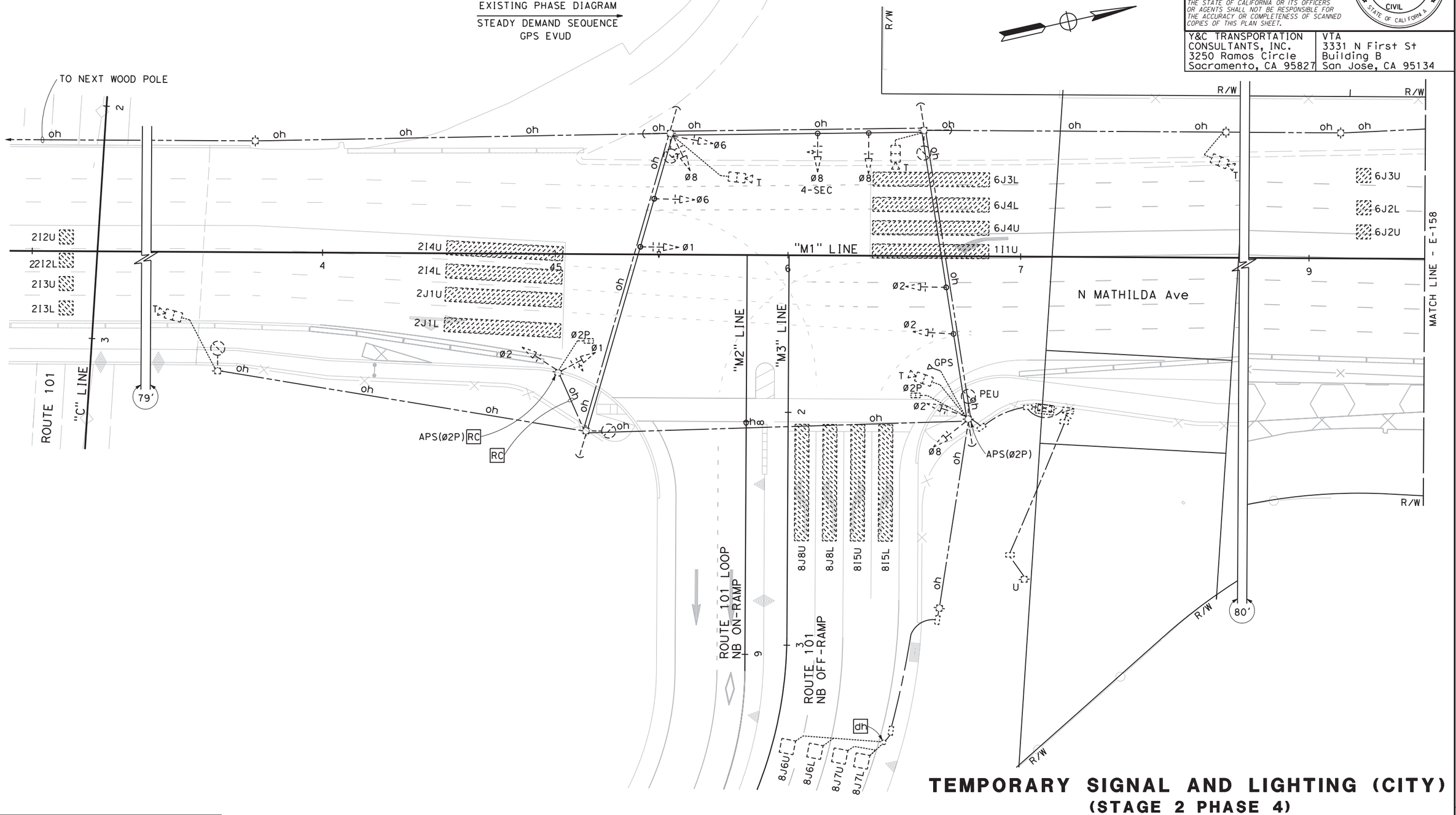

TEMPORARY SIGNAL AND LIGHTING (CITY)
(STAGE 2 PHASE 4)

SCALE: 1" = 20'

E-155

FOR NOTES AND LEGEND, SEE SHEETS E-46 TO E-48

CITY STREET LOCATION 3 (EXISTING)

APPROVED FOR ELECTRICAL WORK ONLY

REVISED BY	DATE REVISED
MENG YANG	DAN YAU
CALCULATED-DESIGNED BY	CHECKED BY
CONSULTANT FUNCTIONAL SUPERVISOR	TIMOTHY J. LEE

STATE OF CALIFORNIA - DEPARTMENT OF TRANSPORTATION
Caltrans

LAST REVISION 00-00-00 | DATE PLOTTED => $DATE | TIME PLOTTED => $TIME

BORDER LAST REVISED 7/2/2010 | USERNAME => $USER | DGN FILE => $REQUEST | RELATIVE BORDER SCALE IS IN INCHES 0 1 2 3 | UNIT 0712 | PROJECT NUMBER & PHASE 0413000204

Dist	COUNTY	ROUTE	POST MILES TOTAL PROJECT	SHEET No.	TOTAL SHEETS
04	SCL	101,237	45.2/45.8, 2.7/3.3	537	736

REGISTERED CIVIL ENGINEER 6-13-18 DATE

6-20-18
PLANS APPROVAL DATE

REGISTERED PROFESSIONAL ENGINEER KIN Y. CHAN No. 55391 Exp. 12/31/18 CIVIL STATE OF CALIFORNIA

THE STATE OF CALIFORNIA OR ITS OFFICERS OR AGENTS SHALL NOT BE RESPONSIBLE FOR THE ACCURACY OR COMPLETENESS OF SCANNED COPIES OF THIS PLAN SHEET.

Y&C TRANSPORTATION CONSULTANTS, INC.
3250 Ramos Circle
Sacramento, CA 95827

VTA
3331 N First St
Building B
San Jose, CA 95134

NOTES:

1. FOR ACCURATE RIGHT OF WAY DATA, CONTACT RIGHT OF WAY ENGINEERING AT THE DISTRICT OFFICE.
2. FOR SCHEDULE, SEE SHEET E-157.

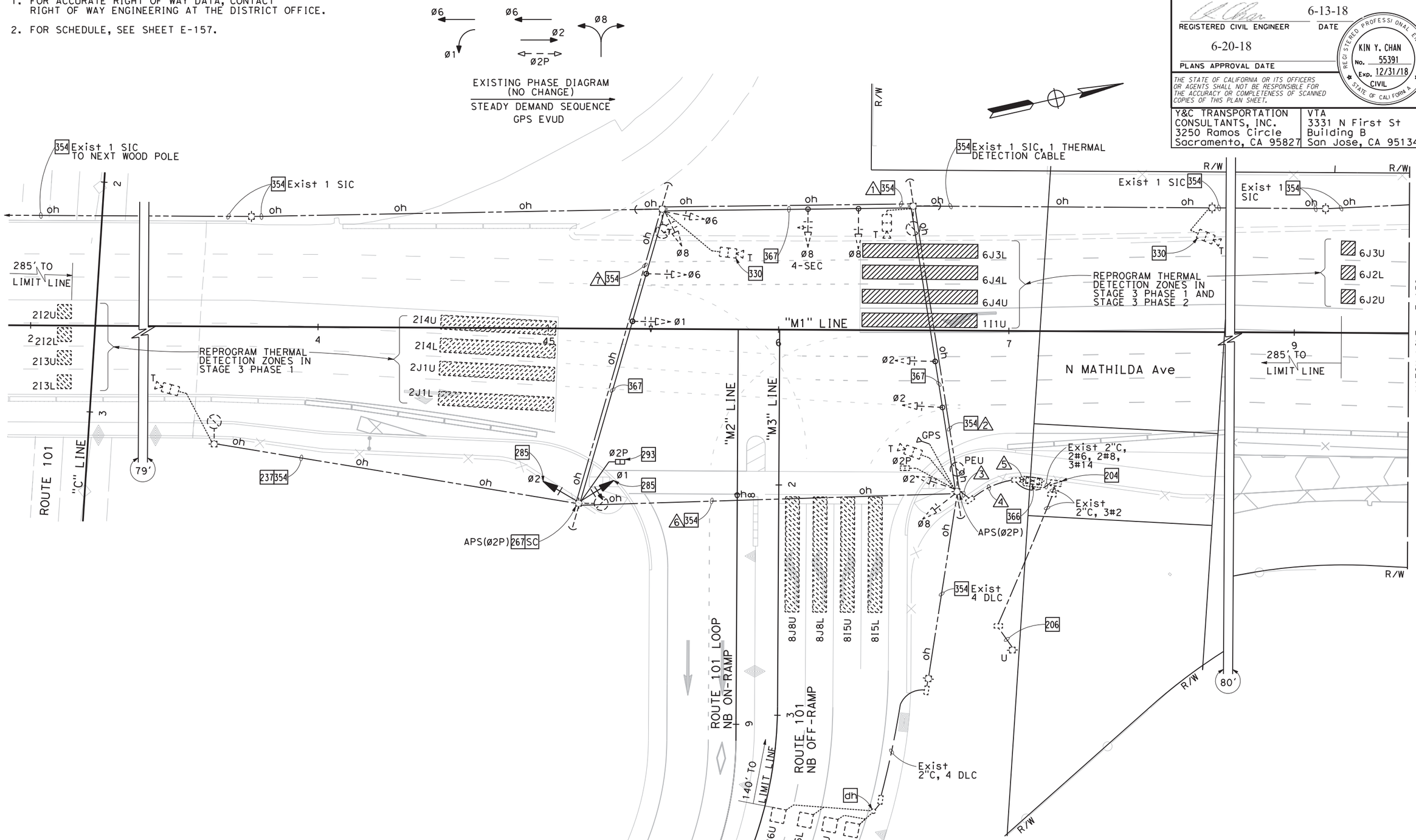

TEMPORARY SIGNAL AND LIGHTING (CITY)
(STAGE 2 PHASE 4 TO STAGE 3 PHASE 2)

SCALE: 1" = 20'

FOR NOTES AND LEGEND, SEE SHEETS E-46 TO E-48

CITY STREET LOCATION 3 (PROPOSED)

APPROVED FOR ELECTRICAL WORK ONLY

E-156

STATE OF CALIFORNIA - DEPARTMENT OF TRANSPORTATION
Caltrans

CONSULTANT FUNCTIONAL SUPERVISOR: TIMOTHY J. LEE
CALCULATED-DESIGNED BY: MENG YANG
CHECKED BY: DAN YAU
REVISED BY
DATE REVISED

LAST REVISION 00-00-00
DATE PLOTTED => $DATE
TIME PLOTTED => $TIME

BORDER LAST REVISED 7/2/2010
USERNAME => $USER
DGN FILE => $REQUEST
RELATIVE BORDER SCALE IS IN INCHES 0 1 2 3
UNIT 0712
PROJECT NUMBER & PHASE 0413000204

Dist	COUNTY	ROUTE	POST MILES TOTAL PROJECT	SHEET No.	TOTAL SHEETS
04	SCL	101,237	45.2/45.8, 2.7/3.3	538	736

6-13-18
REGISTERED CIVIL ENGINEER — DATE

6-20-18
PLANS APPROVAL DATE

REGISTERED PROFESSIONAL ENGINEER
KIN Y. CHAN
No. 55391
Exp. 12/31/18
CIVIL
STATE OF CALIFORNIA

THE STATE OF CALIFORNIA OR ITS OFFICERS OR AGENTS SHALL NOT BE RESPONSIBLE FOR THE ACCURACY OR COMPLETENESS OF SCANNED COPIES OF THIS PLAN SHEET.

Y&C TRANSPORTATION CONSULTANTS, INC.
3250 Ramos Circle
Sacramento, CA 95827

VTA
3331 N First St
Building B
San Jose, CA 95134

SCHEDULE: (FOR SHEET E-156)

CONDUCTOR AND CONDUIT SCHEDULE

CONDUCTOR SCHEDULE	No. OF CONDUCTORS — CONDUIT RUN NUMBER 1	2	3	4	5	6	7
No. 14 CONDUCTORS							
Ø1			6	6	6	6	3
Ø2		3	6	6	6	3	
Ø6	3	3	3	3	3		3
Ø8	3	3	3	3	3		
Ø2P			2	2	2	2	
APS Ø2P			2	2	2	2	
PEU			3	3			
SPARES	3	3	3	3	3	3	3
TOTAL No. 14	9	12	28	28	25	16	9
No. 8 CONDUCTORS							
LIGHTING	2	2	2	2		2	
SIGNAL NEUTRAL	1	1	1	1	1	1	1
TOTAL No. 8	3	3	3	3	1	3	1
No. 6 CONDUCTORS							
CONTROLLER					2		
DETECTOR CABLES (DLC)							
8J6U			1	1	1		
8J6L			1	1	1		
8J7U			1	1	1		
8J7L			1	1	1		
TOTAL DETECTOR CABLES			4	4	4		
THERMAL VEHICLE DETECTION CABLE	1	3	5	5	5	2	
GPS EVUC			1	1	1		
SIC	2	2	2	2	2		
CONDUIT SIZE (INCHES)	OH	OH	2-3"	2-3"	2-3"	OH	OH
NEW/EXISTING CONDUIT	E	E	E	E	E	E	E
% FILL			21	21	21		

FOR NOTES AND LEGEND, SEE SHEETS E-46 TO E-48

CITY STREET LOCATION 3 (PROPOSED)

TEMPORARY SIGNAL AND LIGHTING (CITY)
(STAGE 2 PHASE 4 TO STAGE 3 PHASE 2)

E-157

REVISED BY | DATE REVISED
MENG YANG | DAN YAU
CALCULATED-DESIGNED BY | CHECKED BY
CONSULTANT FUNCTIONAL SUPERVISOR: TIMOTHY J. LEE

STATE OF CALIFORNIA - DEPARTMENT OF TRANSPORTATION
Caltrans

LAST REVISION 00-00-00
DATE PLOTTED => $DATE
TIME PLOTTED => $TIME

BORDER LAST REVISED 7/2/2010
USERNAME => $USER
DGN FILE => $REQUEST
RELATIVE BORDER SCALE IS IN INCHES 0 1 2 3
UNIT 0712
PROJECT NUMBER & PHASE 0413000204

NOTES:

1. FOR ACCURATE RIGHT OF WAY DATA, CONTACT RIGHT OF WAY ENGINEERING AT THE DISTRICT OFFICE.

Dist	COUNTY	ROUTE	POST MILES TOTAL PROJECT	SHEET No.	TOTAL SHEETS
04	SCL	101,237	45.2/45.8, 2.7/3.3	539	736

REGISTERED CIVIL ENGINEER — 6-13-18 DATE

KIN Y. CHAN No. 55391 Exp. 12/31/18 CIVIL — REGISTERED PROFESSIONAL ENGINEER — STATE OF CALIFORNIA

6-20-18
PLANS APPROVAL DATE

THE STATE OF CALIFORNIA OR ITS OFFICERS OR AGENTS SHALL NOT BE RESPONSIBLE FOR THE ACCURACY OR COMPLETENESS OF SCANNED COPIES OF THIS PLAN SHEET.

Y&C TRANSPORTATION CONSULTANTS, INC.
3250 Ramos Circle
Sacramento, CA 95827

VTA
3331 N First St
Building B
San Jose, CA 95134

EXISTING PHASE DIAGRAM
STEADY DEMAND SEQUENCE
GPS EVUD
NRT SHALL BE PROGRAMMED TO Ø9P

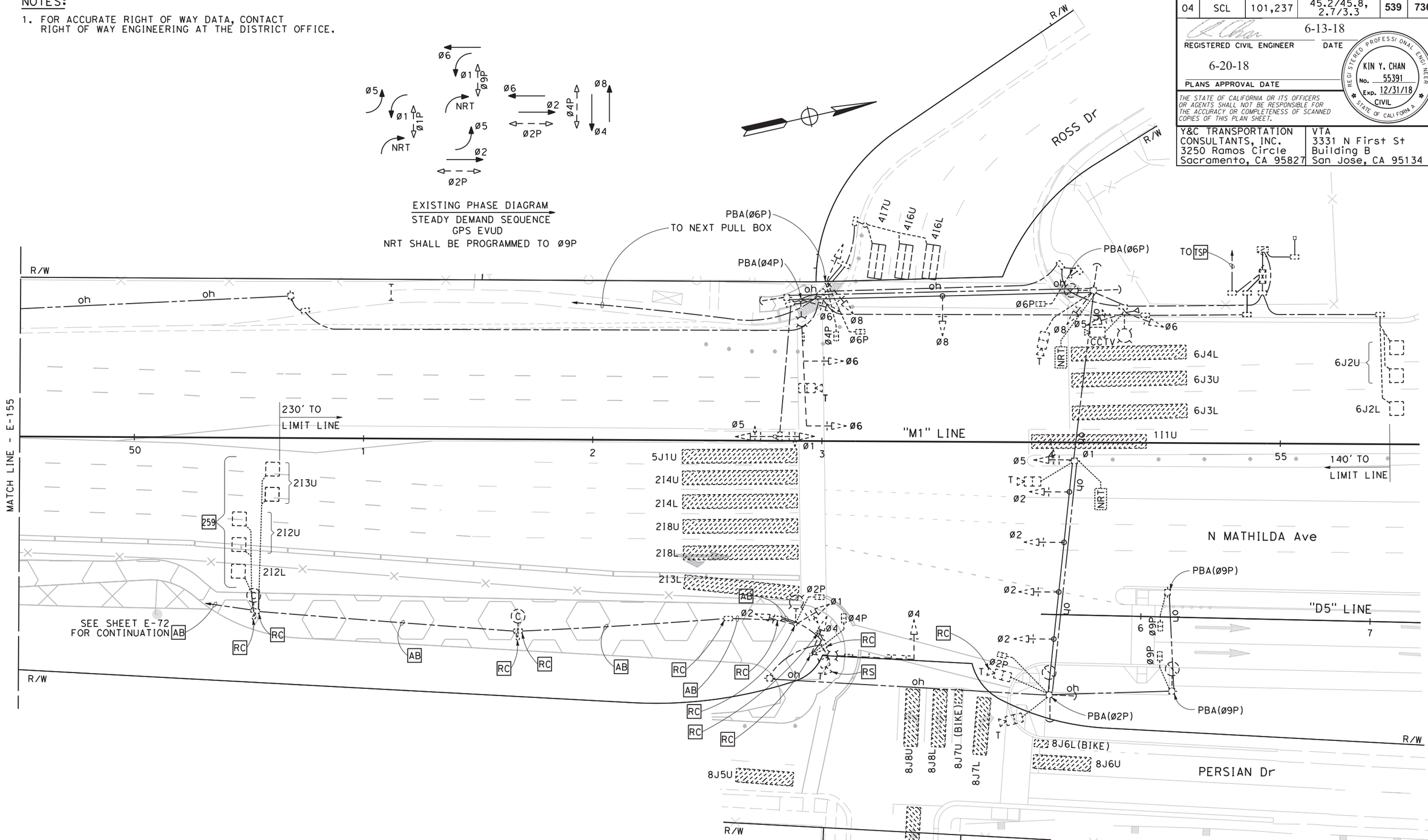

FOR NOTES AND LEGEND, SEE SHEETS E-46 TO E-48

CITY STREET LOCATION 4 (EXISTING)

APPROVED FOR ELECTRICAL WORK ONLY

TEMPORARY SIGNAL AND LIGHTING (CITY)

(STAGE 2 PHASE 4)

SCALE: 1" = 20'

E-158

REVISED BY	DATE REVISED
MENG YANG	DAN YAU

CALCULATED-DESIGNED BY
CHECKED BY

CONSULTANT FUNCTIONAL SUPERVISOR: TIMOTHY J. LEE

STATE OF CALIFORNIA - DEPARTMENT OF TRANSPORTATION — Caltrans

LAST REVISION $DATE $TIME
DATE PLOTTED => $DATE
TIME PLOTTED => $TIME
00-00-00

BORDER LAST REVISED 7/2/2010 | USERNAME => $USER | DGN FILE => $REQUEST | RELATIVE BORDER SCALE IS IN INCHES 0 1 2 3 | UNIT 0712 | PROJECT NUMBER & PHASE 0413000204

NOTES:

1. FOR ACCURATE RIGHT OF WAY DATA, CONTACT RIGHT OF WAY ENGINEERING AT THE DISTRICT OFFICE.
2. FOR SCHEDULE, SEE SHEET E-160.

EXISTING PHASE DIAGRAM
(NO CHANGE)

STEADY DEMAND SEQUENCE
GPS EVUD
NRT SHALL BE PROGRAMMED TO ø9P

Dist	COUNTY	ROUTE	POST MILES TOTAL PROJECT	SHEET No.	TOTAL SHEETS
04	SCL	101,237	45.2/45.8, 2.7/3.3	540	736

6-13-18
REGISTERED CIVIL ENGINEER — DATE

6-20-18
PLANS APPROVAL DATE

REGISTERED PROFESSIONAL ENGINEER
KIN Y. CHAN
No. 55391
Exp. 12/31/18
CIVIL
STATE OF CALIFORNIA

THE STATE OF CALIFORNIA OR ITS OFFICERS OR AGENTS SHALL NOT BE RESPONSIBLE FOR THE ACCURACY OR COMPLETENESS OF SCANNED COPIES OF THIS PLAN SHEET.

Y&C TRANSPORTATION CONSULTANTS, INC.
3250 Ramos Circle
Sacramento, CA 95827

VTA
3331 N First St
Building B
San Jose, CA 95134

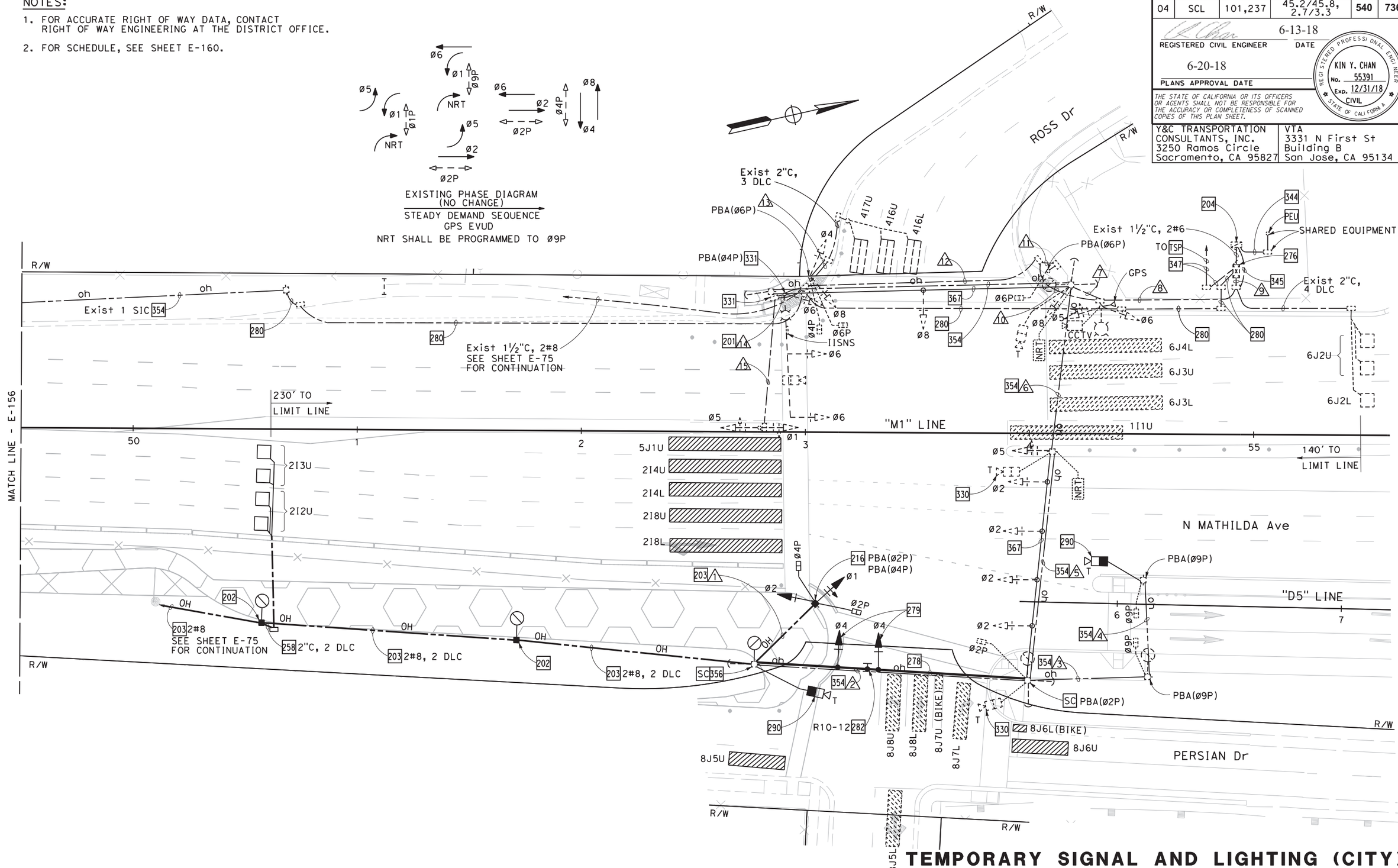

FOR NOTES AND LEGEND, SEE SHEETS E-46 TO E-48

CITY STREET LOCATION 4 (PROPOSED)

APPROVED FOR ELECTRICAL WORK ONLY

TEMPORARY SIGNAL AND LIGHTING (CITY)

(STAGE 2 PHASE 4)

SCALE: 1" = 20'

E-159

REVISED BY | DATE REVISED
MENG YANG | DAN YAU
CALCULATED-DESIGNED BY | CHECKED BY
CONSULTANT FUNCTIONAL SUPERVISOR: TIMOTHY J. LEE

STATE OF CALIFORNIA - DEPARTMENT OF TRANSPORTATION
Caltrans

LAST REVISION: 00-00-00
DATE PLOTTED => $DATE
TIME PLOTTED => $TIME

BORDER LAST REVISED 7/2/2010
USERNAME => $USER
DGN FILE => $REQUEST
RELATIVE BORDER SCALE IS IN INCHES 0 1 2 3
UNIT 0712
PROJECT NUMBER & PHASE 0413000204

SCHEDULE: (FOR SHEET E-159)

CONDUCTOR AND CONDUIT SCHEDULE

CONDUCTOR SCHEDULE	No. OF CONDUCTORS CONDUIT RUN NUMBER														
	/1	/2	/3	/4	/5	/6	/7	/8	/9	/10	/11	/12	/13	/14	/15
No. 14 CONDUCTORS															
Ø1	3	3			3	3	3	6	6	3		3		3	3
Ø2	3	3			3	3	3	3	3						
Ø4		3			3	3	3	6	6	3		3	3		
Ø5						3	3	6	6	3		3		3	3
Ø6								3	3	3		3		3	
Ø8							3	6	6	3		3	3		
Ø2P	2	2			2	2	2	2	2						
Ø4P	2	2			2	2	2	4	4	2		2	2		
Ø6P								2	2	2	2	2	2		
Ø9P			2	2	2	2	2	2	2						
PBA Ø2P	1	1			1	1	1	1	1						
PBA Ø4P	1	1			1	1	1	2	2	1		1		1	
PBA Ø6P								2	2	1	1	1	1		
PBA Ø9P			1	1	1	1	1	1	1						
PBA COMMON	1	1	1	1	1	1	1	2	2	1	1	1	1	1	
SPARES	3	3	3	3	3	3	3	6	6	3	3	3	3	3	3
TOTAL No. 14	19	19	7	7	22	25	28	54	54	25	7	25	15	14	9
No. 10 CONDUCTORS															
NRT SIGN						2	2	2	2						
TOTAL No. 10						2	2	2	2						
No. 8 CONDUCTORS															
LIGHTING & IISNS		2	2	2	2	2	2	4		2		2		2	
SIGNAL NEUTRAL	1	1	1	1	1	1	1	2	2	1	1	1	1	1	1
TOTAL No. 8	1	3	3	3	3	3	3	6	2	3	1	3	1	3	1
DETECTOR CABLES (DLC)															
2I2U		1*			1*	1*	1*	1*	1*						
2I2L		1-			1-	1-	1-	1-	1-						
2I3U		1*			1*	1*	1*	1*	1*						
4I6U								1	1	1		1	1		
4I6L								1	1	1		1	1		
4I7U								1	1	1		1	1		
6J2U									1						
6J2L									1						
TOTAL DETECTOR CABLES		2			2	2	2	5	7	3		3	3		
THERMAL VEHICLE DETECTION CABLE		1	1+	1+	1*/2	1*/3	1*/4	1*/5	1*/5	1		1	1	1	
CCTV CABLE									1						
GPS EVUC								1	1						
CONDUIT SIZE (INCHES)	OH	OH	OH	OH	OH	OH	4	2-3"	2-3"	3	3	3	3	2	2
NEW/EXISTING CONDUIT	N	E	E	E	E	E	E	E	E	E	E	E	E	E	E
% FILL							19	26	26	22	3	16	8	22	7

- REMOVE Exist CONDUCTOR(S)/CABLE(S).
+ ADD NEW CONDUCTOR(S)/CABLE(S).
* REMOVE Exist CONDUCTOR(S)/CABLE(S). ADD NEW CONDUCTOR(S)/CABLE(S).

FOR NOTES AND LEGEND, SEE SHEETS E-46 TO E-48

CITY STREET LOCATION 4 (PROPOSED)

TEMPORARY SIGNAL AND LIGHTING (CITY)
(STAGE 2 PHASE 4)

E-160

Dist	COUNTY	ROUTE	POST MILES TOTAL PROJECT	SHEET No.	TOTAL SHEETS
04	SCL	101,237	45.2/45.8, 2.7/3.3	541	736

6-13-18
REGISTERED CIVIL ENGINEER — DATE

6-20-18
PLANS APPROVAL DATE

REGISTERED PROFESSIONAL ENGINEER
KIN Y. CHAN
No. 55391
Exp. 12/31/18
CIVIL
STATE OF CALIFORNIA

THE STATE OF CALIFORNIA OR ITS OFFICERS OR AGENTS SHALL NOT BE RESPONSIBLE FOR THE ACCURACY OR COMPLETENESS OF SCANNED COPIES OF THIS PLAN SHEET.

Y&C TRANSPORTATION CONSULTANTS, INC.
3250 Ramos Circle
Sacramento, CA 95827

VTA
3331 N First St
Building B
San Jose, CA 95134

REVISED BY | DATE REVISED
MENG YANG | DAN YAU
CALCULATED-DESIGNED BY | CHECKED BY
CONSULTANT FUNCTIONAL SUPERVISOR: TIMOTHY J. LEE
STATE OF CALIFORNIA - DEPARTMENT OF TRANSPORTATION — Caltrans

LAST REVISION 00-00-00 | DATE PLOTTED => $DATE | TIME PLOTTED => $TIME

BORDER LAST REVISED 7/2/2010 | USERNAME => $USER | DGN FILE => $REQUEST | RELATIVE BORDER SCALE IS IN INCHES 0 1 2 3 | UNIT 0712 | PROJECT NUMBER & PHASE 0413000204

NOTES:

1. FOR ACCURATE RIGHT OF WAY DATA, CONTACT RIGHT OF WAY ENGINEERING AT THE DISTRICT OFFICE.
2. FOR SCHEDULE, SEE SHEET E-162.

Dist	COUNTY	ROUTE	POST MILES TOTAL PROJECT	SHEET No.	TOTAL SHEETS
04	SCL	101,237	45.2/45.8, 2.7/3.3	542	736

REGISTERED CIVIL ENGINEER — DATE: 6-13-18

PLANS APPROVAL DATE: 6-20-18

KIN Y. CHAN No. 55391 Exp. 12/31/18 CIVIL — REGISTERED PROFESSIONAL ENGINEER — STATE OF CALIFORNIA

THE STATE OF CALIFORNIA OR ITS OFFICERS OR AGENTS SHALL NOT BE RESPONSIBLE FOR THE ACCURACY OR COMPLETENESS OF SCANNED COPIES OF THIS PLAN SHEET.

Y&C TRANSPORTATION CONSULTANTS, INC. 3250 Ramos Circle Sacramento, CA 95827	VTA 3331 N First St Building B San Jose, CA 95134

EXISTING PHASE DIAGRAM (NO CHANGE)

STEADY DEMAND SEQUENCE
GPS EVUD
NRT SHALL BE PROGRAMMED TO Ø9P

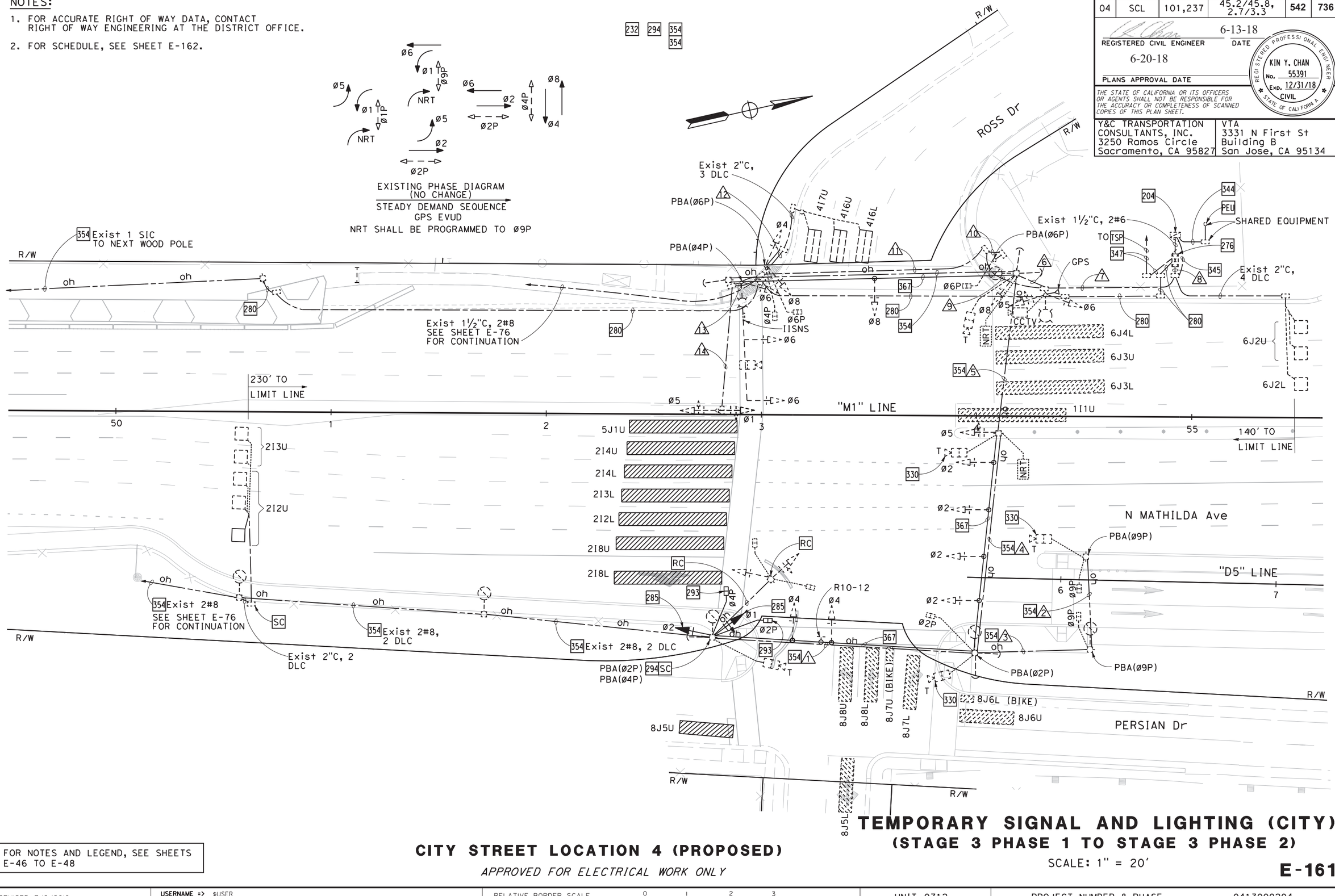

FOR NOTES AND LEGEND, SEE SHEETS E-46 TO E-48

CITY STREET LOCATION 4 (PROPOSED)

APPROVED FOR ELECTRICAL WORK ONLY

TEMPORARY SIGNAL AND LIGHTING (CITY)
(STAGE 3 PHASE 1 TO STAGE 3 PHASE 2)

SCALE: 1" = 20'

E-161

REVISED BY | DATE REVISED
MENG YANG | DAN YAU
CALCULATED-DESIGNED BY | CHECKED BY
CONSULTANT FUNCTIONAL SUPERVISOR: TIMOTHY J.LEE
STATE OF CALIFORNIA - DEPARTMENT OF TRANSPORTATION — Caltrans

LAST REVISION $DATE $TIME
DATE PLOTTED => $DATE
TIME PLOTTED => $TIME
00-00-00

BORDER LAST REVISED 7/2/2010 | USERNAME => $USER | DGN FILE => $REQUEST | RELATIVE BORDER SCALE IS IN INCHES 0 1 2 3 | UNIT 0712 | PROJECT NUMBER & PHASE 0413000204

SCHEDULE: (FOR SHEET E-161)

CONDUCTOR AND CONDUIT SCHEDULE

CONDUCTOR SCHEDULE	No. OF CONDUCTORS CONDUIT RUN NUMBER													
	1	2	3	4	5	6	7	8	9	10	11	12	13	14
No. 14 CONDUCTORS														
Ø1	3			3	3	3	6	6	3		3		3	3
Ø2	3			3	3	3	3	3						
Ø4	3			3	3	3	6	6	3		3	3		
Ø5					3	3	6	6	3		3		3	3
Ø6							3	3	3		3		3	
Ø8						3	6	6	3		3	3		
Ø2P	2			2	2	2	2	2						
Ø4P	2			2	2	2	4	4	2		2	2		
Ø6P							2	2	2	2	2	2		
Ø9P		2	2	2	2	2	2	2						
PBA Ø2P	1			1	1	1	1	1						
PBA Ø4P	1			1	1	1	2	2	1		1		1	
PBA Ø6P							2	2	1	1	1	1		
PBA Ø9P		1	1	1	1	1	1	1						
PBA COMMON	1	1	1	1	1	1	2	2	1	1	1	1	1	
SPARES	3	3	3	3	3	3	6	6	3	3	3	3	3	3
TOTAL No. 14	19	7	7	22	25	28	54	54	25	7	25	15	14	9
No. 10 CONDUCTORS														
NRT SIGN					2	2	2	2						
TOTAL No. 10					2	2	2	2						
No. 8 CONDUCTORS														
LIGHTING & IISNS	2	2	2	2	2	2	4		2		2		2	
SIGNAL NEUTRAL	1	1	1	1	1	1	2	2	1	1	1	1	1	1
TOTAL No. 8	3	3	3	3	3	3	6	2	3	1	3	1	3	1
DETECTOR CABLES (DLC)														
2I2U	1			1	1	1	1	1						
2I3U	1			1	1	1	1	1						
4I6U							1	1	1		1	1		
4I6L							1	1	1		1	1		
4I7U							1	1	1		1	1		
6J2U								1						
6J2L								1						
TOTAL DETECTOR CABLES	2			2	2	2	5	7	3		3	3		
THERMAL VEHICLE DETECTION CABLE	1	1	1	3	4	5	6	6	1		1	1	1	
CCTV CABLE								1						
GPS EVUC							1	1						
CONDUIT SIZE (INCHES)	OH	OH	OH	OH	OH	4	2-3"	2-3"	3	3	3	3	2	2
NEW/EXISTING CONDUIT	E	E	E	E	E	E	E	E	E	E	E	E	E	E
% FILL						19	26	26	22	3	16	8	22	7

FOR NOTES AND LEGEND, SEE SHEETS E-46 TO E-48

CITY STREET LOCATION 4 (PROPOSED)

TEMPORARY SIGNAL AND LIGHTING (CITY)
(STAGE 3 PHASE 1 TO STAGE 3 PHASE 2)

E-162

Dist	COUNTY	ROUTE	POST MILES TOTAL PROJECT	SHEET No.	TOTAL SHEETS
04	SCL	101,237	45.2/45.8, 2.7/3.3	543	736

6-13-18
REGISTERED CIVIL ENGINEER — DATE

6-20-18
PLANS APPROVAL DATE

REGISTERED PROFESSIONAL ENGINEER — KIN Y. CHAN — No. 55391 — Exp. 12/31/18 — CIVIL — STATE OF CALIFORNIA

THE STATE OF CALIFORNIA OR ITS OFFICERS OR AGENTS SHALL NOT BE RESPONSIBLE FOR THE ACCURACY OR COMPLETENESS OF SCANNED COPIES OF THIS PLAN SHEET.

Y&C TRANSPORTATION CONSULTANTS, INC.
3250 Ramos Circle
Sacramento, CA 95827

VTA
3331 N First St
Building B
San Jose, CA 95134

REVISED BY | DATE REVISED
MENG YANG | DAN YAU
CALCULATED-DESIGNED BY | CHECKED BY
CONSULTANT FUNCTIONAL SUPERVISOR: TIMOTHY J. LEE
STATE OF CALIFORNIA - DEPARTMENT OF TRANSPORTATION — Caltrans

DATE PLOTTED => $DATE
TIME PLOTTED => $TIME
LAST REVISION 00-00-00

BORDER LAST REVISED 7/2/2010 | USERNAME => $USER | DGN FILE => $REQUEST | RELATIVE BORDER SCALE IS IN INCHES 0 1 2 3 | UNIT 0712 | PROJECT NUMBER & PHASE 0413000204

NOTE:

FOR ACCURATE RIGHT OF WAY DATA, CONTACT
RIGHT OF WAY ENGINEERING AT THE DISTRICT OFFICE.

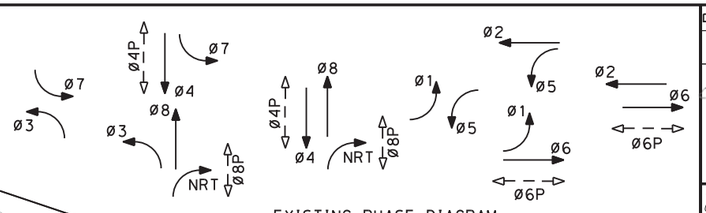

EXISTING PHASE DIAGRAM
STEADY DEMAND SEQUENCE
GPS EVUD
NRT SHALL BE PROGRAMMED TO Ø8P

Dist	COUNTY	ROUTE	POST MILES TOTAL PROJECT	SHEET No.	TOTAL SHEETS
04	SCL	101,237	45.2/45.8, 2.7/3.3	544	736

6-13-18
REGISTERED CIVIL ENGINEER DATE

6-20-18
PLANS APPROVAL DATE

REGISTERED PROFESSIONAL ENGINEER
KIN Y. CHAN
No. 55391
Exp. 12/31/18
CIVIL
STATE OF CALIFORNIA

THE STATE OF CALIFORNIA OR ITS OFFICERS OR AGENTS SHALL NOT BE RESPONSIBLE FOR THE ACCURACY OR COMPLETENESS OF SCANNED COPIES OF THIS PLAN SHEET.

Y&C TRANSPORTATION CONSULTANTS, INC.
3250 Ramos Circle
Sacramento, CA 95827

VTA
3331 N First St
Building B
San Jose, CA 95134

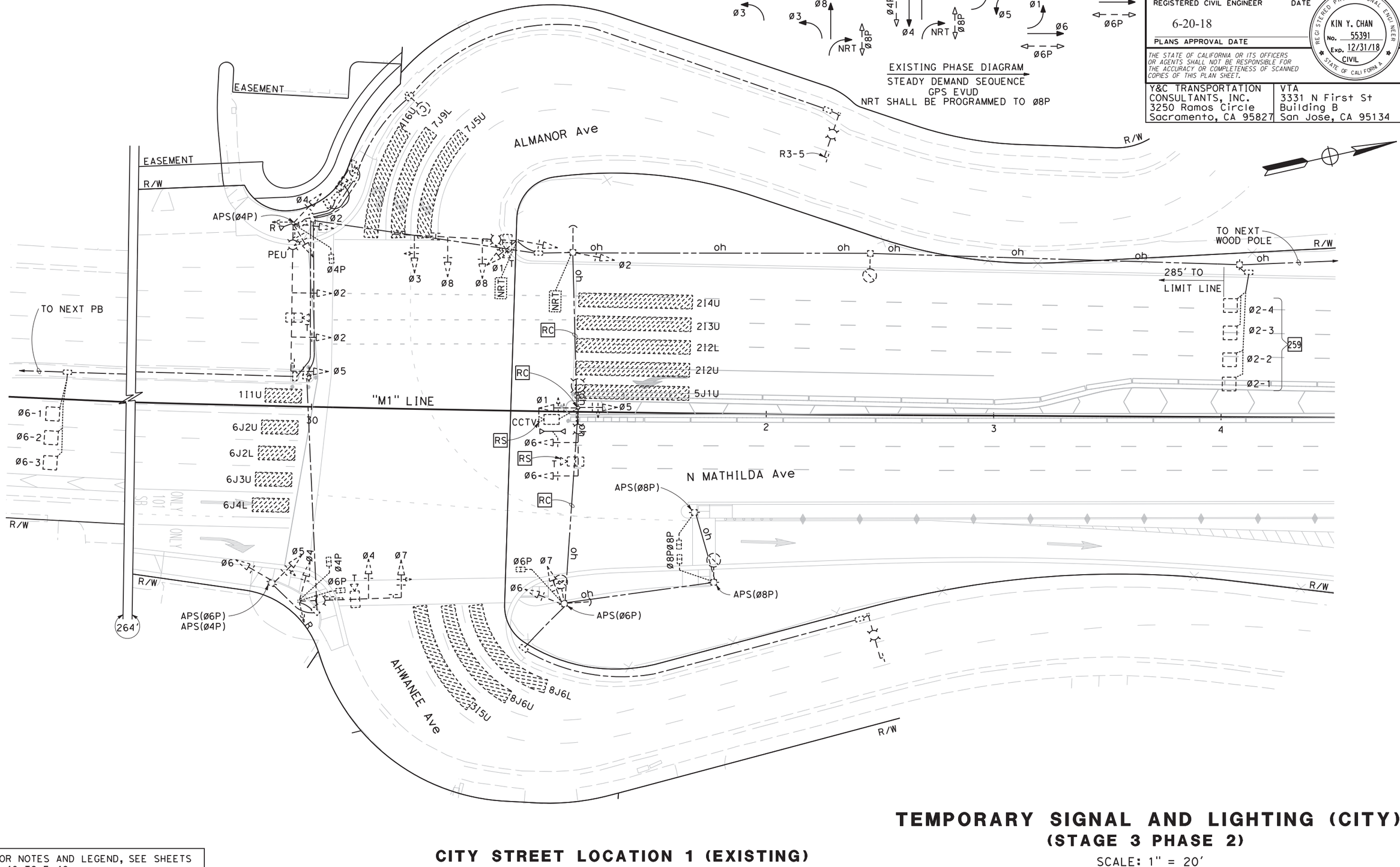

FOR NOTES AND LEGEND, SEE SHEETS E-46 TO E-48

CITY STREET LOCATION 1 (EXISTING)

APPROVED FOR ELECTRICAL WORK ONLY

TEMPORARY SIGNAL AND LIGHTING (CITY)

(STAGE 3 PHASE 2)

SCALE: 1" = 20'

E-163

STATE OF CALIFORNIA - DEPARTMENT OF TRANSPORTATION
Caltrans
CONSULTANT FUNCTIONAL SUPERVISOR: TIMOTHY J. LEE
CALCULATED-DESIGNED BY: MENG YANG
CHECKED BY: DAN YAU
REVISED BY
DATE REVISED

LAST REVISION 00-00-00
DATE PLOTTED => $DATE
TIME PLOTTED => $TIME

BORDER LAST REVISED 7/2/2010
USERNAME => $USER
DGN FILE => $REQUEST
RELATIVE BORDER SCALE IS IN INCHES 0 1 2 3
UNIT 0712
PROJECT NUMBER & PHASE 0413000204

NOTES:

1. FOR ACCURATE RIGHT OF WAY DATA, CONTACT RIGHT OF WAY ENGINEERING AT THE DISTRICT OFFICE.
2. FOR SCHEDULE, SEE SHEET E-165.

Dist	COUNTY	ROUTE	POST MILES TOTAL PROJECT	SHEET No.	TOTAL SHEETS
04	SCL	101,237	45.2/45.8, 2.7/3.3	545	736

6-13-18
REGISTERED CIVIL ENGINEER — DATE

6-20-18
PLANS APPROVAL DATE

REGISTERED PROFESSIONAL ENGINEER — KIN Y. CHAN — No. 55391 — Exp. 12/31/18 — CIVIL — STATE OF CALIFORNIA

THE STATE OF CALIFORNIA OR ITS OFFICERS OR AGENTS SHALL NOT BE RESPONSIBLE FOR THE ACCURACY OR COMPLETENESS OF SCANNED COPIES OF THIS PLAN SHEET.

Y&C TRANSPORTATION CONSULTANTS, INC.
3250 Ramos Circle
Sacramento, CA 95827

VTA
3331 N First St
Building B
San Jose, CA 95134

EXISTING PHASE DIAGRAM (NO CHANGE)
STEADY DEMAND SEQUENCE
GPS EVUD
NRT SHALL BE PROGRAMMED TO Ø8P

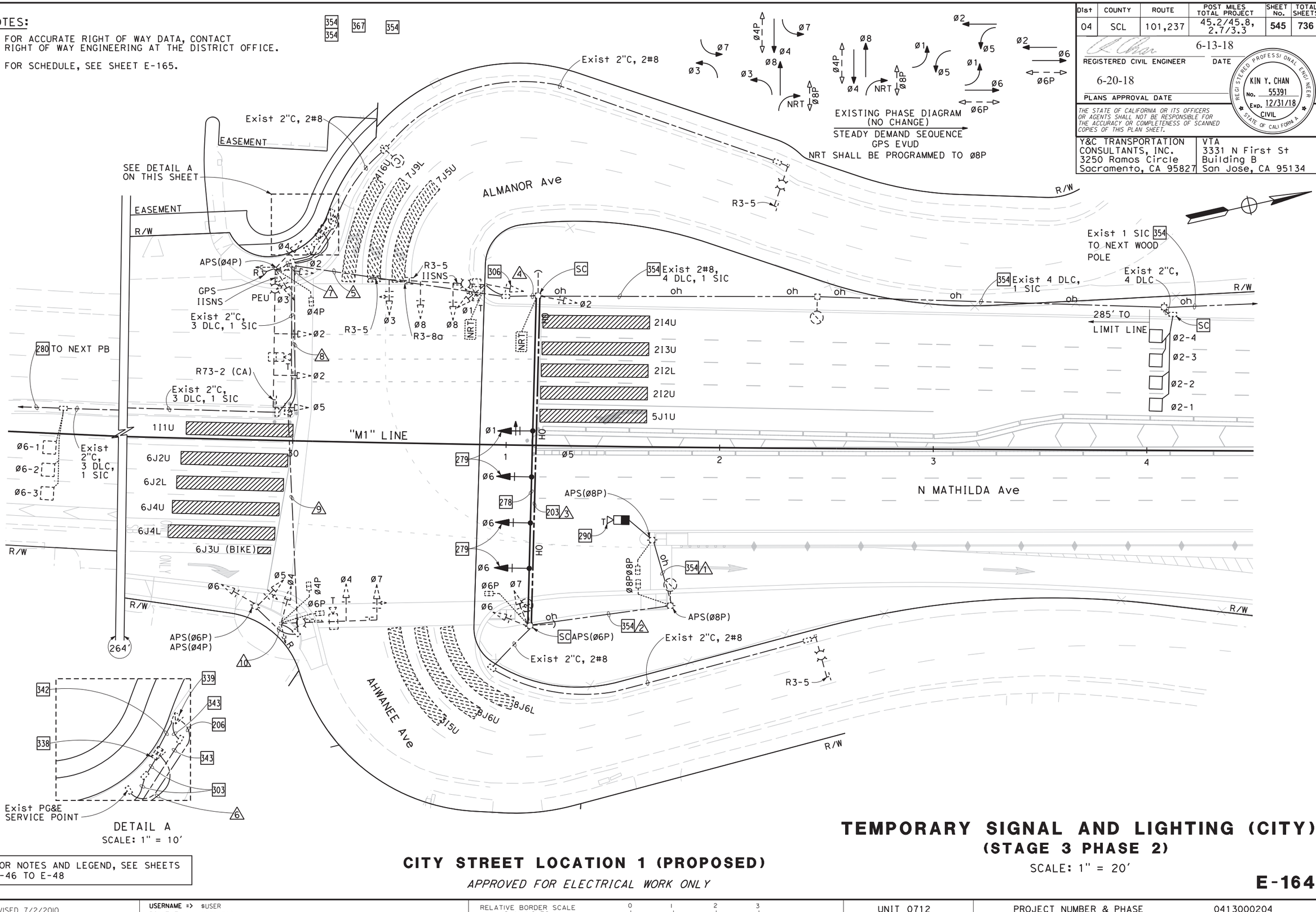

FOR NOTES AND LEGEND, SEE SHEETS E-46 TO E-48

CITY STREET LOCATION 1 (PROPOSED)

APPROVED FOR ELECTRICAL WORK ONLY

TEMPORARY SIGNAL AND LIGHTING (CITY)

(STAGE 3 PHASE 2)

SCALE: 1" = 20'

E-164

REVISED BY | DATE REVISED
MENG YANG | DAN YAU
CALCULATED-DESIGNED BY | CHECKED BY
CONSULTANT FUNCTIONAL SUPERVISOR: TIMOTHY J.LEE
STATE OF CALIFORNIA - DEPARTMENT OF TRANSPORTATION
Caltrans

LAST REVISION: 00-00-00
DATE PLOTTED => $DATE
TIME PLOTTED => $TIME

BORDER LAST REVISED 7/2/2010 | USERNAME => $USER | DGN FILE => $REQUEST | RELATIVE BORDER SCALE IS IN INCHES 0 1 2 3 | UNIT 0712 | PROJECT NUMBER & PHASE 0413000204

SCHEDULE: (FOR SHEET E-164)

CONDUCTOR AND CONDUIT SCHEDULE

CONDUCTOR SCHEDULE	No. OF CONDUCTORS CONDUIT RUN NUMBER										
	1	2	3	4	5	6	7	8	9	10	11
No. 14 CONDUCTORS											
Ø1			3	3	3	3					
Ø2				3	3	6	3				
Ø3					3	6	3				
Ø4						3	3	3	3		
Ø5			3	3	3	6	3	3	3	3	
Ø6			3	3	3	6		3	3	3	
Ø7			3	3	3	6		3	3		
Ø8					3	3					
Ø4P						2	2	2	2		
Ø6P			2	2	2	4		2	2		
Ø8P	2	2	2	2	2	2					
IISNS			2	2	2		2	2	2		
PEU							3				
SPARES	3	3	3	3	3	6	3	3	3	3	
TOTAL No. 14	5	5	21	24	30	53	22	21	21	9	
No. 12 CONDUCTORS											
APS Ø4P						2	2	2	2	2	
APS Ø6P			2	2	2	4		2	2	2	
APS Ø8P	2	2	2	2	2	2					
TOTAL No. 12	2	2	4	4	4	8	2	4	4	4	
No. 10 CONDUCTORS											
NRT ACTIVATED BLANK-OUT SIGN			2	2	2	2					
TOTAL No. 8			2	2	2	2					
No. 8 CONDUCTORS											
LIGHTING	2	2	2	2	2		2	2	2		
SIGNAL NEUTRAL	1	1	1	1	1	1	1	1	1		
TOTAL No. 8	3	3	3	3	3	1	3	3	3		
DETECTOR CABLES (DLC)											
Ø2				4	4	4					
Ø6						3					
TOTAL DETECTOR CABLES				4	4	7					
THERMAL VEHICLE DETECTION CABLE	1+	1+	1	1*/1-	1*/1-	1*/3+	1	1	1		
CCTV CABLE				1-	1-	1-					
GPS EVUC						1	1				
SIC				1	1						
CONDUIT SIZE (INCHES)	OH	OH	OH	3	2-2"	2-3"	2	2	2	2	
NEW/EXISTING CONDUIT	E	E	N	E	E	E	E	E	E	E	
% FILL				21	35	25	32	29	29	9	

* REMOVE Exist CONDUCTOR(S)/CABLE(S). ADD NEW CONDUCTOR(S)/CABLE(S).
- REMOVE Exist CONDUCTOR(S)/CABLE(S).
+ ADD NEW CONDUCTOR(S)/CABLE(S).

FOR NOTES AND LEGEND, SEE SHEETS E-46 TO E-48

Dist	COUNTY	ROUTE	POST MILES TOTAL PROJECT	SHEET No.	TOTAL SHEETS
04	SCL	101,237	45.2/45.8, 2.7/3.3	546	736

6-13-18
REGISTERED CIVIL ENGINEER — DATE

6-20-18
PLANS APPROVAL DATE

REGISTERED PROFESSIONAL ENGINEER
KIN Y. CHAN
No. 55391
Exp. 12/31/18
CIVIL
STATE OF CALIFORNIA

THE STATE OF CALIFORNIA OR ITS OFFICERS OR AGENTS SHALL NOT BE RESPONSIBLE FOR THE ACCURACY OR COMPLETENESS OF SCANNED COPIES OF THIS PLAN SHEET.

Y&C TRANSPORTATION CONSULTANTS, INC.
3250 Ramos Circle
Sacramento, CA 95827

VTA
3331 N First St
Building B
San Jose, CA 95134

CALCULATED-DESIGNED BY
CHECKED BY
REVISED BY — MENG YANG
DATE REVISED — DAN YAU
CONSULTANT FUNCTIONAL SUPERVISOR — TIMOTHY J. LEE
STATE OF CALIFORNIA - DEPARTMENT OF TRANSPORTATION — Caltrans

CITY STREET LOCATION 1 (PROPOSED)

TEMPORARY SIGNAL AND LIGHTING (CITY)
(STAGE 3 PHASE 2)

E-165

LAST REVISION 00-00-00
DATE PLOTTED => $DATE
TIME PLOTTED => $TIME

Dist	COUNTY	ROUTE	POST MILES TOTAL PROJECT	SHEET No.	TOTAL SHEETS
04	SCL	101,237	45.2/45.8, 2.7/3.3	547	736

REGISTERED CIVIL ENGINEER 6-13-18 DATE

6-20-18
PLANS APPROVAL DATE

REGISTERED PROFESSIONAL ENGINEER KIN Y. CHAN No. 55391 Exp. 12/31/18 CIVIL STATE OF CALIFORNIA

THE STATE OF CALIFORNIA OR ITS OFFICERS OR AGENTS SHALL NOT BE RESPONSIBLE FOR THE ACCURACY OR COMPLETENESS OF SCANNED COPIES OF THIS PLAN SHEET.

Y&C TRANSPORTATION CONSULTANTS, INC.
3250 Ramos Circle
Sacramento, CA 95827

VTA
3331 N First St
Building B
San Jose, CA 95134

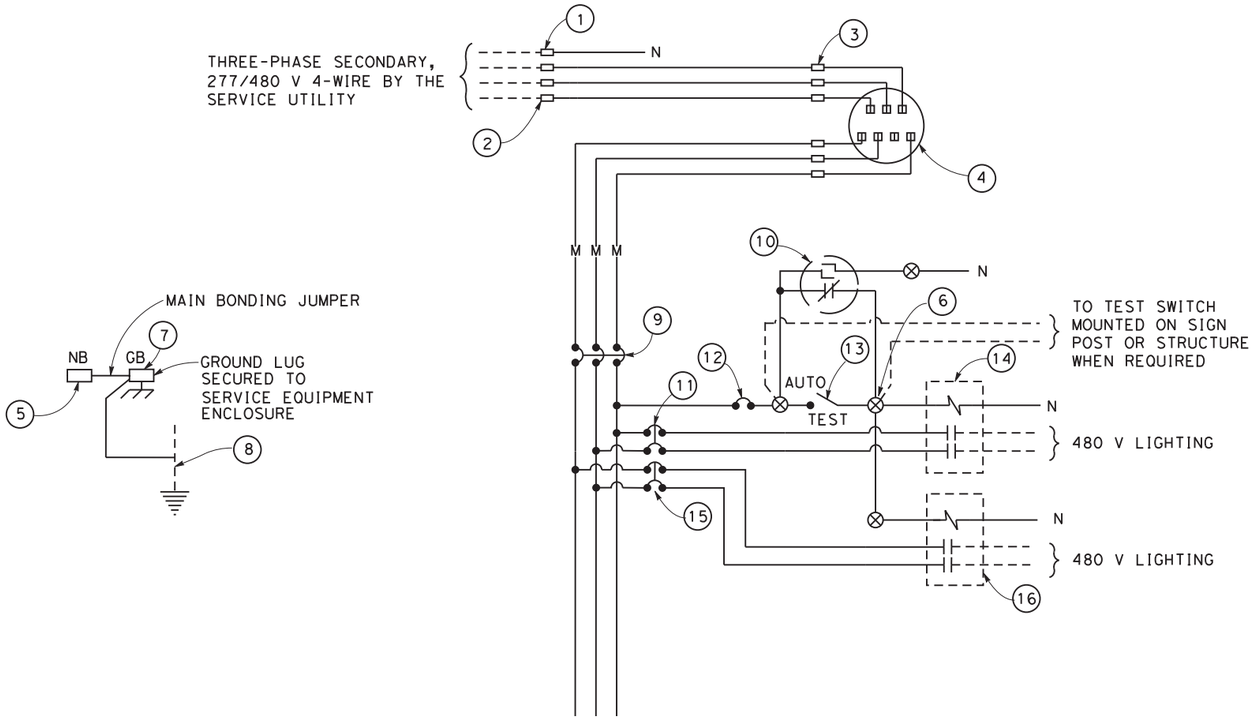

277/480 V SERVICE WIRING DIAGRAM B (TYPICAL)

NOTES (FOR THIS SHEET ONLY)

1. VOLTAGE RATINGS OF SERVICE EQUIPMENT MUST CONFORM TO THE SERVICE VOLTAGES INDICATED ON THE PLANS.
2. UNLESS OTHERWISE INDICATED ON THE PLANS, ALL SERVICE EQUIPMENT ITEMS MUST BE PROVIDED FOR EACH SERVICE EQUIPMENT ENCLOSURE AS SHOWN.
3. CONNECT TO REMOTE TEST SWITCH MOUNTED ON SIGN POST OR STRUCTURE WHEN REQUIRED.
4. METER SOCKETS MUST MEET SERVICE UTILITY REQUIREMENTS.
5. THE LANDING LUG MUST BE SUITABLE FOR MULTIPLE CONDUCTORS.
6. PHOTOELECTRIC CONTROL MUST BE TYPE II.
7. SERVICE UTILITY WILL INSTALL THE TIME-OF-USE METER IF APPLICABLE.
8. UNLESS OTHERWISE NOTED, THE MAXIMUM NUMBER OF SINGLE-POLE CIRCUIT BREAKER SPACES IN THE ENCLOSURE IS FOURTEEN.
9. SEE STANDARD PLAN RSP ES-2D FOR OTHER DETAILS.

TYPE III-A SERVICE (277/480 V) EQUIPMENT LEGEND

ITEM No.	COMPONENT	NAMEPLATE DESCRIPTION	ITEM No.	COMPONENT	NAMEPLATE DESCRIPTION
1	NEUTRAL LUG		9	100 A, 480 V, 3P, CB	MAIN BREAKER
2	LANDING LUG		10	PHOTOELECTRIC UNIT (NOTE 6)	
3	TEST BYPASS FACILITY		11	30 A, 480 V, 2P, CB	LIGHTING
4	METER SOCKET AND SUPPORT		12	15 A, 277 V, 1P, CB	LIGHTING CONTROL
5	NEUTRAL BUS		13	15 A, 277 V, 1P, TEST SWITCH	TEST SWITCH
6	TERMINAL BLOCKS		14	30 A, 2P, NO CONTACTOR	
7	GROUND BUS		15	30 A, 480 V, 2P, CB	LIGHTING
8	GROUNDING ELECTRODE		16	30 A, 2P, NO CONTACTOR	

ELECTRICAL SYSTEMS DETAILS
(SERVICE EQUIPMENT AND TYPICAL WIRING DIAGRAM TYPE III SERIES)

NO SCALE

ED-1

STATE OF CALIFORNIA - DEPARTMENT OF TRANSPORTATION
Caltrans®

CONSULTANT FUNCTIONAL SUPERVISOR: TIMOTHY J. LEE
CALCULATED-DESIGNED BY: MENG YANG
CHECKED BY: DAN YAU
REVISED BY
DATE REVISED

LAST REVISION 00-00-00
DATE PLOTTED => $DATE
TIME PLOTTED => $TIME

Dist	COUNTY	ROUTE	POST MILES TOTAL PROJECT	SHEET No.	TOTAL SHEETS
04	SCL	101,237	45.2/45.8, 2.7/3.3	548	736

6-13-18
REGISTERED CIVIL ENGINEER — DATE

6-20-18
PLANS APPROVAL DATE

REGISTERED PROFESSIONAL ENGINEER
KIN Y. CHAN
No. 55391
Exp. 12/31/18
CIVIL
STATE OF CALIFORNIA

THE STATE OF CALIFORNIA OR ITS OFFICERS OR AGENTS SHALL NOT BE RESPONSIBLE FOR THE ACCURACY OR COMPLETENESS OF SCANNED COPIES OF THIS PLAN SHEET.

Y&C TRANSPORTATION CONSULTANTS, INC.
3250 Ramos Circle
Sacramento, CA 95827

VTA
3331 N First St
Building B
San Jose, CA 95134

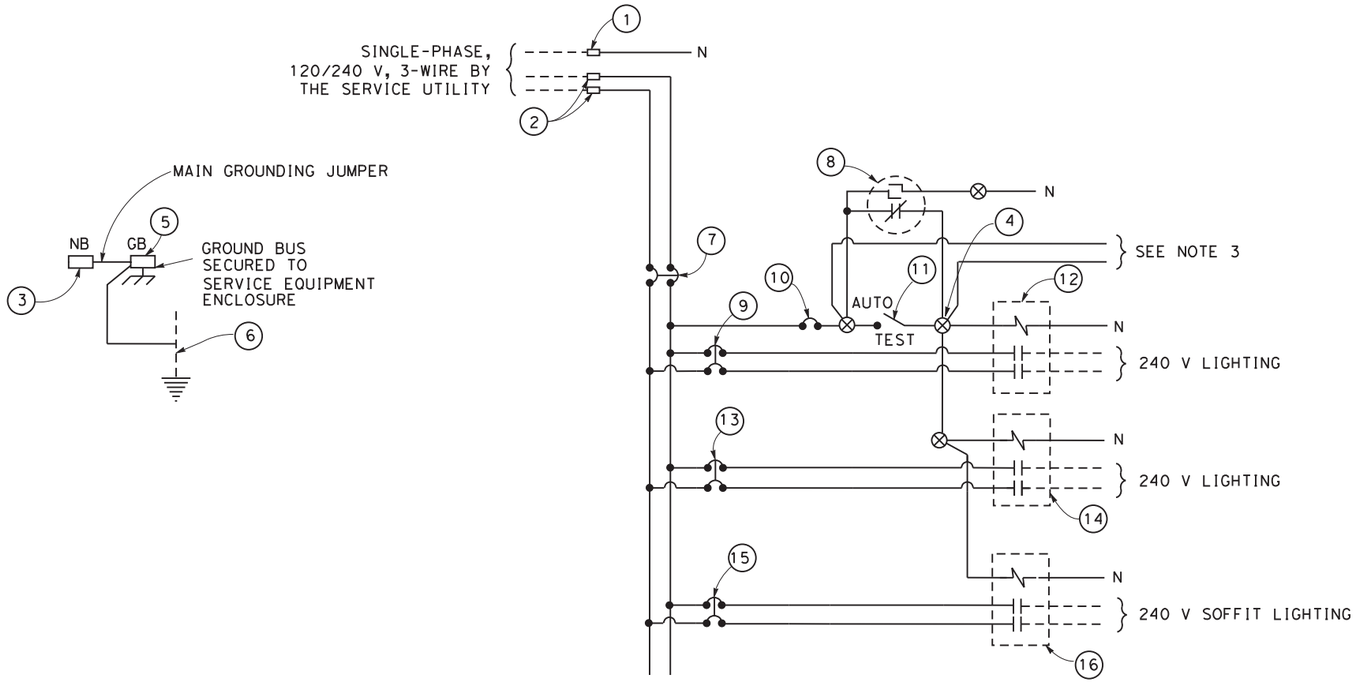

120/240 V UNMETERED SERVICE WIRING DIAGRAM (TYPICAL)

TYPE III-A SERVICE (120/240 V) EQUIPMENT ENCLOSURE LEGEND

ITEM No.	COMPONENT	NAMEPLATE DESCRIPTION	ITEM No.	COMPONENT	NAMEPLATE DESCRIPTION
(1)	NEUTRAL LUG		(11)	15 A, 120 V, 1P, TEST SWITCH	TEST SWITCH
(2)	LANDING LUG		(12)	60 A, 2P, CONTACTOR	LIGHTING
(3)	NEUTRAL BUS		(13)	30 A, 240 V, 2P, CB	LIGHTING
(4)	TERMINAL BLOCK		(14)	60 A, 2P, CONTACTOR	LIGHTING
(5)	GROUND BUS		(15)	30 A, 240 V, 2P, CB	SOFFIT LIGHTING
(6)	GROUNDING ELECTRODE		(16)	30 A, 2P, CONTACTOR	SOFFIT LIGHTING
(7)	100 A, 240 V, 2P, CB	MAIN BREAKER			
(8)	PHOTOELECTRIC UNIT (NOTE 5)				
(9)	30 A, 240 V, 2P, CB	LIGHTING			
(10)	15 A, 120 V, 1P, CB	LIGHTING CONTROL			

NOTES (FOR THIS SHEET ONLY)

1. VOLTAGE RATINGS OF SERVICE EQUIPMENT MUST CONFORM TO THE SERVICE VOLTAGES INDICATED ON THE PLANS.
2. UNLESS OTHERWISE INDICATED ON THE PLANS, ALL SERVICE EQUIPMENT ITEMS MUST BE PROVIDED FOR EACH SERVICE EQUIPMENT ENCLOSURE AS SHOWN.
3. CONNECT TO REMOTE TEST SWITCH MOUNTED ON SIGN POST OR STRUCTURE WHEN REQUIRED.
4. THE LANDING LUG MUST BE SUITABLE FOR MULTIPLE CONDUCTORS.
5. PHOTOELECTRIC CONTROL MUST BE TYPE II.
6. SERVICE UTILITY WILL INSTALL THE TIME-OF-USE METER IF APPLICABLE.
7. UNLESS OTHERWISE NOTED, THE MAXIMUM NUMBER OF SINGLE-POLE CIRCUIT BREAKER SPACES IN THE ENCLOSURE IS FOURTEEN.
8. SEE STANDARD PLAN RSP ES-2D FOR OTHER DETAILS.

ELECTRICAL SYSTEMS DETAILS
(SERVICE EQUIPMENT AND TYPICAL WIRING DIAGRAM TYPE III-A SERIES)

NO SCALE

ED-2

REVISED BY | DATE REVISED
MENG YANG | DAN YAU
CALCULATED-DESIGNED BY | CHECKED BY
CONSULTANT FUNCTIONAL SUPERVISOR: TIMOTHY J. LEE
STATE OF CALIFORNIA - DEPARTMENT OF TRANSPORTATION — Caltrans

LAST REVISION 00-00-00 | DATE PLOTTED => $DATE | TIME PLOTTED => $TIME

BORDER LAST REVISED 7/2/2010 | USERNAME => $USER | DGN FILE => $REQUEST | RELATIVE BORDER SCALE IS IN INCHES 0 1 2 3 | UNIT 0712 | PROJECT NUMBER & PHASE 0413000204

Dist	COUNTY	ROUTE	POST MILES TOTAL PROJECT	SHEET No.	TOTAL SHEETS
04	SCL	101,237	45.2/45.8, 2.7/3.3	549	736

6-13-18
REGISTERED CIVIL ENGINEER — DATE

6-20-18
PLANS APPROVAL DATE

REGISTERED PROFESSIONAL ENGINEER
KIN Y. CHAN
No. 55391
Exp. 12/31/18
CIVIL
STATE OF CALIFORNIA

THE STATE OF CALIFORNIA OR ITS OFFICERS OR AGENTS SHALL NOT BE RESPONSIBLE FOR THE ACCURACY OR COMPLETENESS OF SCANNED COPIES OF THIS PLAN SHEET.

Y&C TRANSPORTATION CONSULTANTS, INC.
3250 Ramos Circle
Sacramento, CA 95827

VTA
3331 N First St
Building B
San Jose, CA 95134

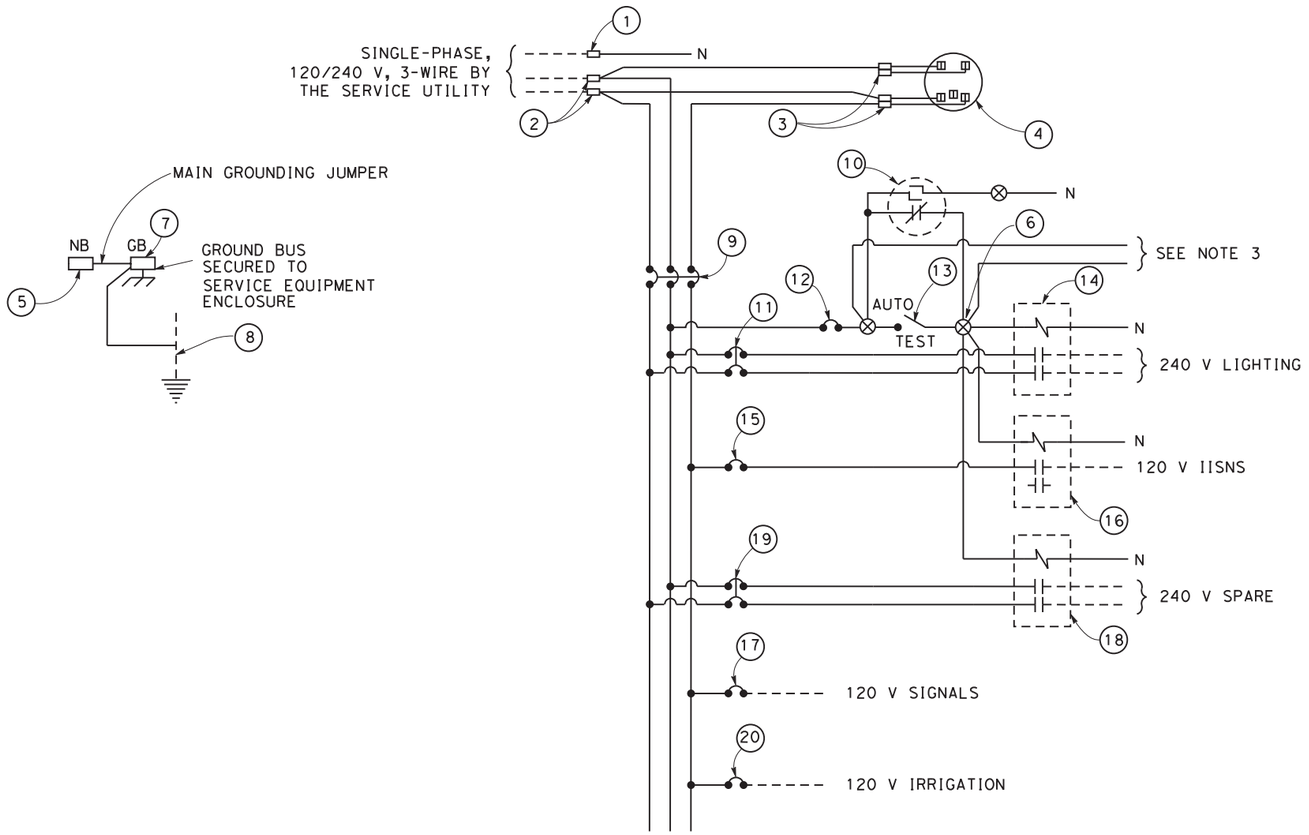

120/240 V METERED/UNMETERED SERVICE WIRING DIAGRAM (TYPICAL)

TYPE III-A SERVICE (120/240 V) EQUIPMENT ENCLOSURE LEGEND

ITEM No.	COMPONENT	NAMEPLATE DESCRIPTION	ITEM No.	COMPONENT	NAMEPLATE DESCRIPTION
(1)	NEUTRAL LUG		(11)	30 A, 240 V, 2P, CB	LIGHTING
(2)	LANDING LUG		(12)	15 A, 120 V, 1P, CB	LIGHTING CONTROL
(3)	TEST BYPASS FACILITY		(13)	15 A, 120 V, 1P, TEST SWITCH	TEST SWITCH
(4)	METER SOCKET AND SUPPORT		(14)	60 A, 2P, CONTACTOR	LIGHTING
(5)	NEUTRAL BUS		(15)	15 A, 120 V, 1P, CB	IISNS
(6)	TERMINAL BLOCK		(16)	30 A, 2P, CONTACTOR	IISNS
(7)	GROUND BUS		(17)	50 A, 120 V, 1P, CB	SIGNALS
(8)	GROUNDING ELECTRODE		(18)	60 A, 2P, CONTACTOR	SPARE
(9)	100 A, 240 V, 3P, CB	MAIN BREAKER	(19)	30 A, 240 V, 2P, CB	SPARE
(10)	PHOTOELECTRIC UNIT (NOTE 6)		(20)	20 A, 120 V, 1P, CB	IRRIGATION

NOTES (FOR THIS SHEET ONLY)

1. VOLTAGE RATINGS OF SERVICE EQUIPMENT MUST CONFORM TO THE SERVICE VOLTAGES INDICATED ON THE PLANS.
2. UNLESS OTHERWISE INDICATED ON THE PLANS, ALL SERVICE EQUIPMENT ITEMS MUST BE PROVIDED FOR EACH SERVICE EQUIPMENT ENCLOSURE AS SHOWN.
3. CONNECT TO REMOTE TEST SWITCH MOUNTED ON SIGN POST OR STRUCTURE WHEN REQUIRED.
4. METER SOCKETS MUST MEET SERVICE UTILITY REQUIREMENTS.
5. THE LANDING LUG MUST BE SUITABLE FOR MULTIPLE CONDUCTORS.
6. PHOTOELECTRIC CONTROL MUST BE TYPE II.
7. SERVICE UTILITY WILL INSTALL THE TIME-OF-USE METER IF APPLICABLE.
8. UNLESS OTHERWISE NOTED, THE MAXIMUM NUMBER OF SINGLE-POLE CIRCUIT BREAKER SPACES IN THE ENCLOSURE IS FOURTEEN.
9. SEE STANDARD PLAN RSP ES-2D FOR OTHER DETAILS.

ELECTRICAL SYSTEMS DETAILS
(SERVICE EQUIPMENT AND TYPICAL WIRING DIAGRAM TYPE III-A SERIES)

NO SCALE

ED-3

CALCULATED-DESIGNED BY	CHECKED BY	REVISED BY	DATE REVISED
MENG YANG	DAN YAU		

CONSULTANT FUNCTIONAL SUPERVISOR: TIMOTHY J. LEE

STATE OF CALIFORNIA - DEPARTMENT OF TRANSPORTATION

Caltrans

LAST REVISION 00-00-00 | DATE PLOTTED => $DATE | TIME PLOTTED => $TIME

BORDER LAST REVISED 7/2/2010 | USERNAME => $USER | DGN FILE => $REQUEST | RELATIVE BORDER SCALE IS IN INCHES 0 1 2 3 | UNIT 0712 | PROJECT NUMBER & PHASE 0413000204

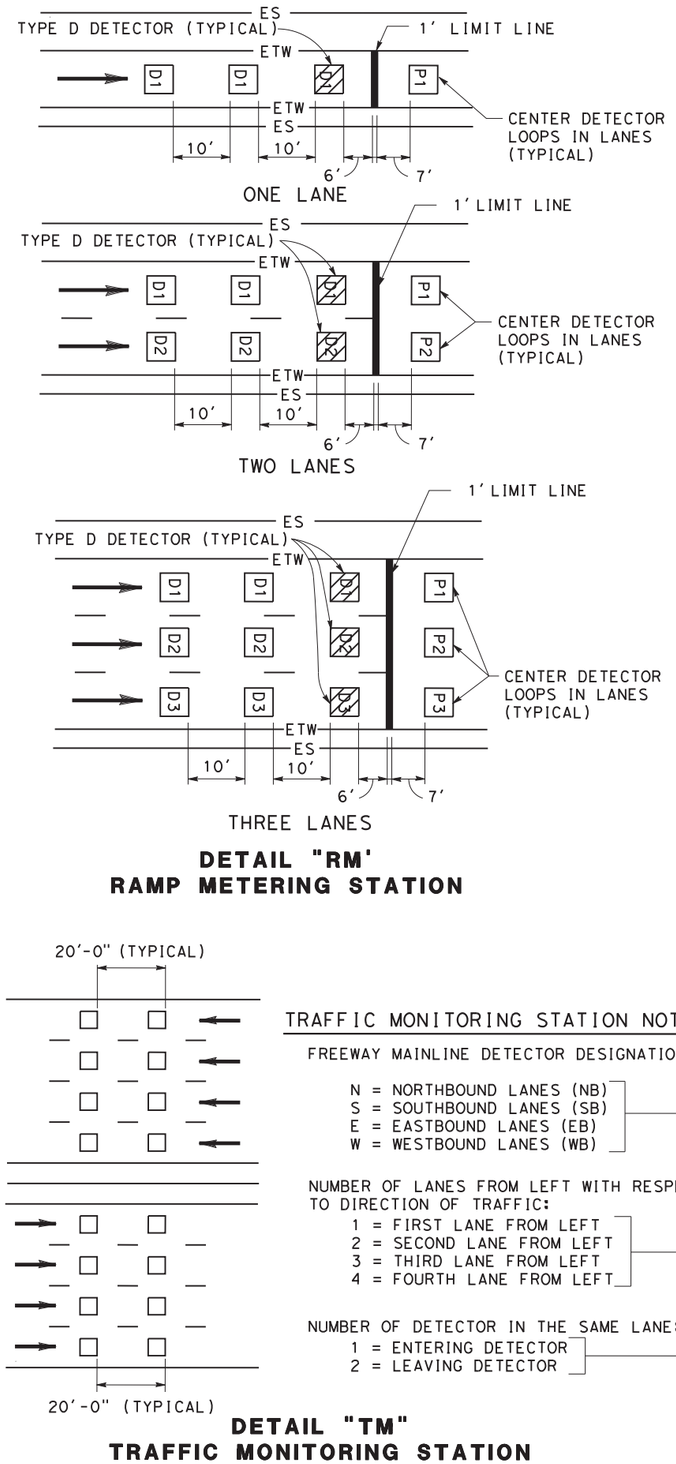

DETAIL "RM'
RAMP METERING STATION

TRAFFIC MONITORING STATION NOTES:

FREEWAY MAINLINE DETECTOR DESIGNATION:

N = NORTHBOUND LANES (NB)
S = SOUTHBOUND LANES (SB)
E = EASTBOUND LANES (EB)
W = WESTBOUND LANES (WB)

NUMBER OF LANES FROM LEFT WITH RESPECT TO DIRECTION OF TRAFFIC:

1 = FIRST LANE FROM LEFT
2 = SECOND LANE FROM LEFT
3 = THIRD LANE FROM LEFT
4 = FOURTH LANE FROM LEFT

NUMBER OF DETECTOR IN THE SAME LANE:

1 = ENTERING DETECTOR
2 = LEAVING DETECTOR

N 3-2

DETAIL "TM"
TRAFFIC MONITORING STATION

RAMP METERING STATION NOTES:

1. SEE RSP ES-5A, RSP ES-5B, AND RSP ES-13A FOR ADDITIONAL DETAILS.
2. DLC CONDUCTORS SHALL BE SPLICED TO THE LOOP CONDUCTORS IN THE NEAREST PULLBOX.
3. ALL SPLICES SHALL BE TYPE "S" OR TYPE "ST" AS REQUIRED.
4. TYPE 1 STANDARDS SHOULD BE LOCATED A MINIMUM OF 12 INCHES DOWNSTREAM OF THE TRAILING EDGE OF THE LIMIT LINE AND 4 FEET OFFSET FROM THE EDGE OF THE SHOULDER.

RAMP DETECTOR DESIGNATION:

D = DEMAND DETECTOR
P = PASSAGE DETECTOR
Q = QUEUE DETECTOR
F = OFF-RAMP DETECTOR

1 = FIRST LANE FROM LEFT
2 = SECOND LANE FROM LEFT

D-2

ELECTRICAL SYSTEMS DETAILS
(RAMP METERING AND TRAFFIC MONITORING DETECTOR SPACING AND DESIGNATION)

NO SCALE

ED-4

Dist	COUNTY	ROUTE	POST MILES TOTAL PROJECT	SHEET No.	TOTAL SHEETS
04	SCL	101,237	45.2/45.8, 2.7/3.3	550	736

6-13-18
REGISTERED CIVIL ENGINEER DATE

6-20-18
PLANS APPROVAL DATE

REGISTERED PROFESSIONAL ENGINEER
KIN Y. CHAN
No. 55391
Exp. 12/31/18
CIVIL
STATE OF CALIFORNIA

THE STATE OF CALIFORNIA OR ITS OFFICERS OR AGENTS SHALL NOT BE RESPONSIBLE FOR THE ACCURACY OR COMPLETENESS OF SCANNED COPIES OF THIS PLAN SHEET.

Y&C TRANSPORTATION CONSULTANTS, INC.
3250 Ramos Circle
Sacramento, CA 95827

VTA
3331 N First St
Building B
San Jose, CA 95134

REVISED BY	DATE REVISED

CALCULATED-DESIGNED BY: MENG YANG
CHECKED BY: DAN YAU
CONSULTANT FUNCTIONAL SUPERVISOR: TIMOTHY J. LEE

STATE OF CALIFORNIA - DEPARTMENT OF TRANSPORTATION
Caltrans

LAST REVISION 00-00-00
DATE PLOTTED => $DATE
TIME PLOTTED => $TIME

BORDER LAST REVISED 7/2/2010
USERNAME => $USER
DGN FILE => $REQUEST
RELATIVE BORDER SCALE IS IN INCHES 0 1 2 3
UNIT 0712
PROJECT NUMBER & PHASE 0413000204

Dist	COUNTY	ROUTE	POST MILES TOTAL PROJECT	SHEET No.	TOTAL SHEETS
04	SCL	101,237	45.2/45.8, 2.7/3.3	551	736

6-13-18
REGISTERED CIVIL ENGINEER — DATE

6-20-18
PLANS APPROVAL DATE

REGISTERED PROFESSIONAL ENGINEER
KIN Y. CHAN
No. 55391
Exp. 12/31/18
CIVIL
STATE OF CALIFORNIA

THE STATE OF CALIFORNIA OR ITS OFFICERS OR AGENTS SHALL NOT BE RESPONSIBLE FOR THE ACCURACY OR COMPLETENESS OF SCANNED COPIES OF THIS PLAN SHEET.

Y&C TRANSPORTATION CONSULTANTS, INC.
3250 Ramos Circle
Sacramento, CA 95827

VTA
3331 N First St
Building B
San Jose, CA 95134

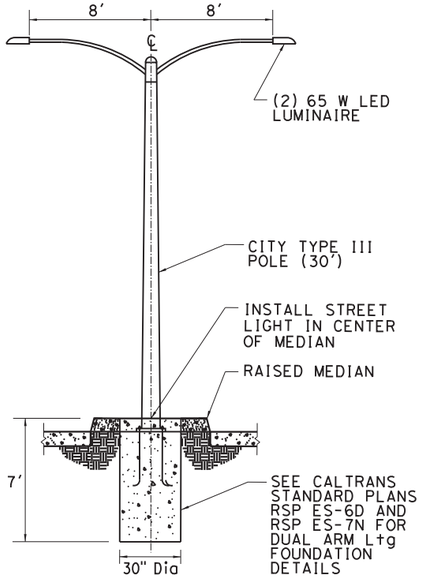

DETAIL A
POLE LOCATION

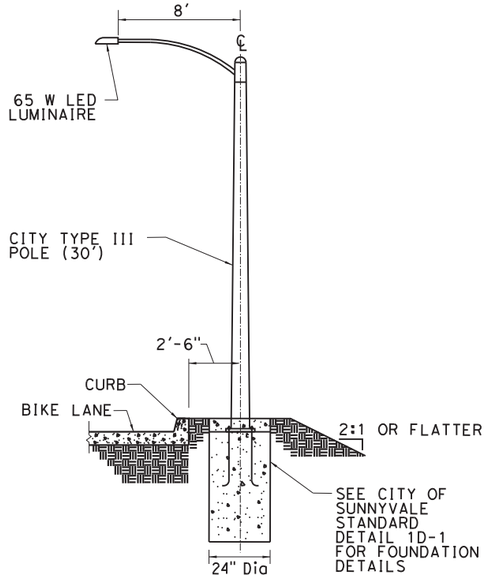

DETAIL B
POLE LOCATION

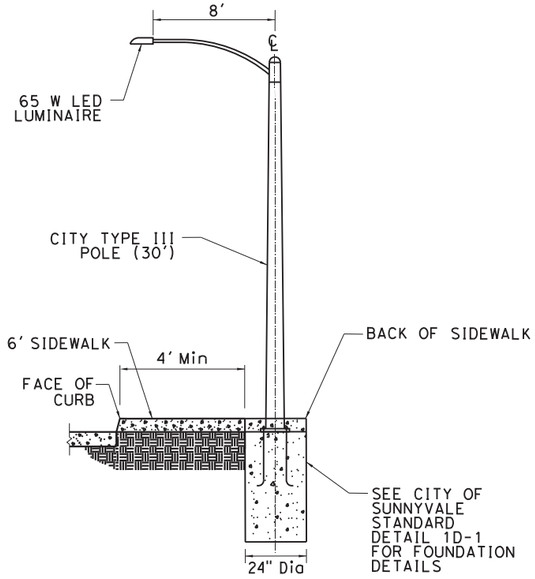

DETAIL C
POLE LOCATION

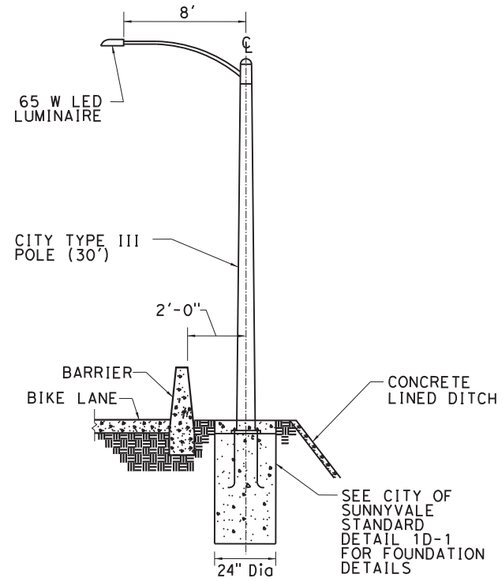

DETAIL D
POLE LOCATION

ELECTRICAL SYSTEMS DETAILS

NO SCALE

ED-5

CALCULATED-DESIGNED BY: MENG YANG
CHECKED BY: DAN YAU
CONSULTANT FUNCTIONAL SUPERVISOR: TIMOTHY J. LEE
STATE OF CALIFORNIA - DEPARTMENT OF TRANSPORTATION
Caltrans

REVISED BY | DATE REVISED

LAST REVISION 00-00-00
DATE PLOTTED => $DATE
TIME PLOTTED => $TIME

BORDER LAST REVISED 7/2/2010
USERNAME => $USER
DGN FILE => $REQUEST
RELATIVE BORDER SCALE IS IN INCHES 0 1 2 3
UNIT 0712
PROJECT NUMBER & PHASE 0413000204

Dist	COUNTY	ROUTE	POST MILES TOTAL PROJECT	SHEET No.	TOTAL SHEETS
04	SCL	101,237	45.2/45.8, 2.7/3.3	552	736

REGISTERED CIVIL ENGINEER 6-13-18 DATE

6-20-18
PLANS APPROVAL DATE

REGISTERED PROFESSIONAL ENGINEER KIN Y. CHAN No. 55391 Exp. 12/31/18 CIVIL STATE OF CALIFORNIA

THE STATE OF CALIFORNIA OR ITS OFFICERS OR AGENTS SHALL NOT BE RESPONSIBLE FOR THE ACCURACY OR COMPLETENESS OF SCANNED COPIES OF THIS PLAN SHEET.

Y&C TRANSPORTATION CONSULTANTS, INC.
3250 Ramos Circle
Sacramento, CA 95827

VTA
3331 N First St
Building B
San Jose, CA 95134

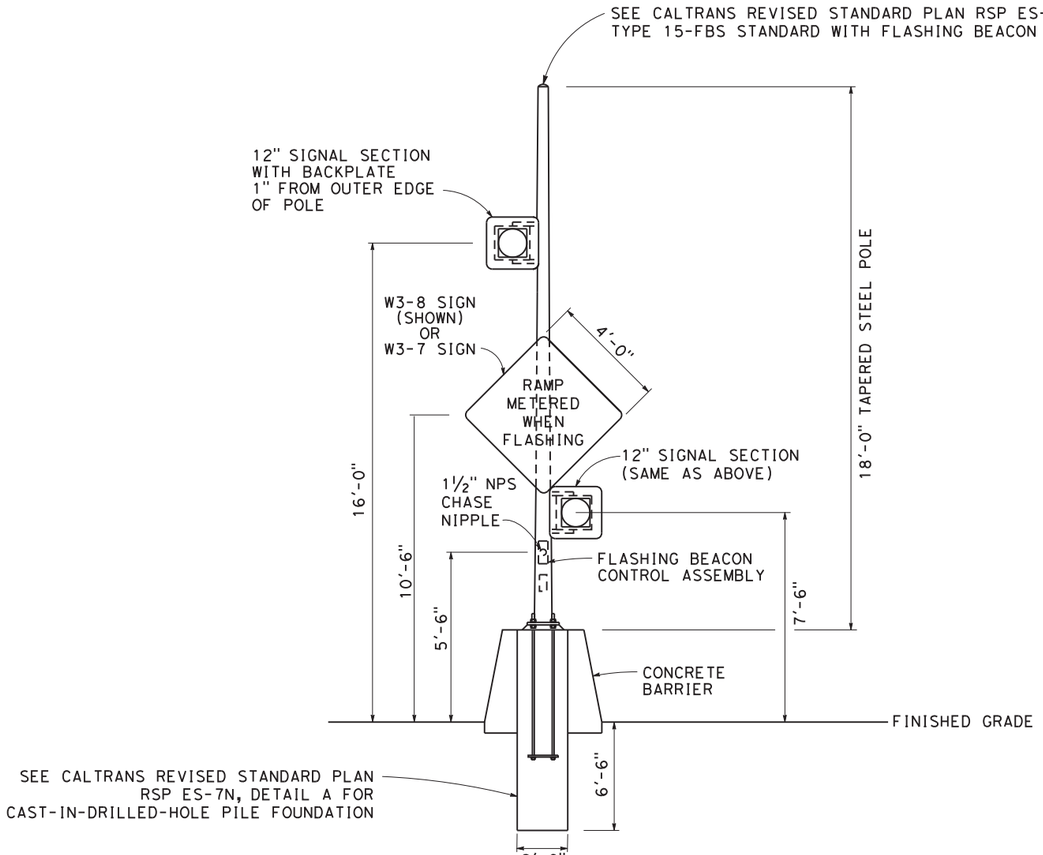

TYPE 15-FBS

FLASHING BEACON ON BARRIER INSTALLATION

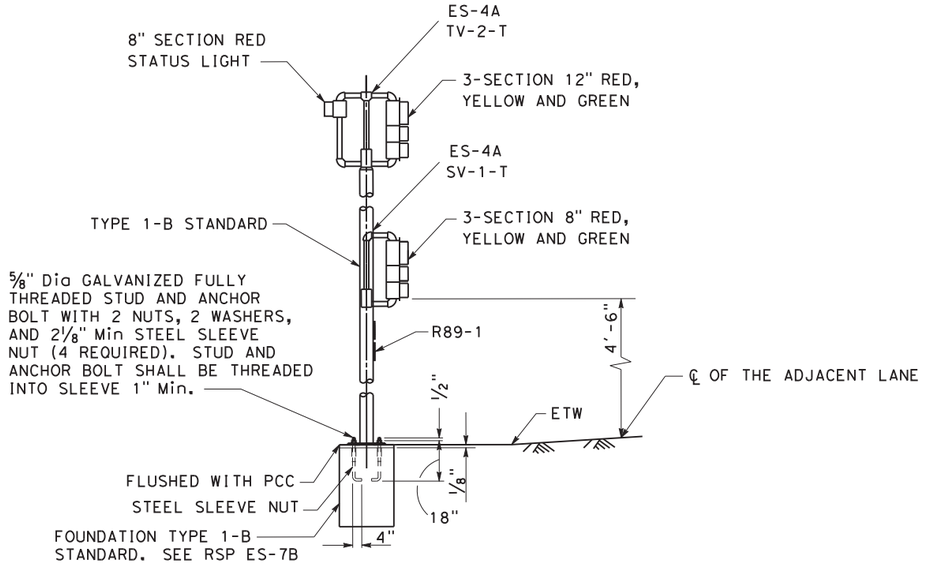

DETAIL "SIG"
RAMP METER SIGNAL, POLE MOUNTED

SIGNAL CONDUCTORS FOR RAMP METERS SHALL BE COLOR CODED AS FOLLOWS:

PHASE	BASE	STRIPE	BAND SYMBOLS
1	RE,YE,BRN	NONE	1
2	RE,YE,BRN	BLACK	2
3	RE,YE,BRN	PURPLE	3
4	RE,YE,BRN	ORANGE	4

DETAIL "CONDUCTOR COLOR CODING"

ELECTRICAL SYSTEMS DETAILS
(RAMP METERING SYSTEM DETAIL)

NO SCALE

ED-6

STATE OF CALIFORNIA - DEPARTMENT OF TRANSPORTATION
Caltrans

CONSULTANT FUNCTIONAL SUPERVISOR: TIMOTHY J. LEE
CALCULATED-DESIGNED BY: MENG YANG
CHECKED BY: DAN YAU
REVISED BY
DATE REVISED

LAST REVISION 00-00-00
DATE PLOTTED => $DATE
TIME PLOTTED => $TIME

Dist	COUNTY	ROUTE	POST MILES TOTAL PROJECT	SHEET No.	TOTAL SHEETS
04	SCL	101,237	45.2/45.8, 2.7/3.3	553	736

6-13-18
REGISTERED CIVIL ENGINEER — DATE

6-20-18
PLANS APPROVAL DATE

REGISTERED PROFESSIONAL ENGINEER
KIN Y. CHAN
No. 55391
Exp. 12/31/18
CIVIL
STATE OF CALIFORNIA

THE STATE OF CALIFORNIA OR ITS OFFICERS OR AGENTS SHALL NOT BE RESPONSIBLE FOR THE ACCURACY OR COMPLETENESS OF SCANNED COPIES OF THIS PLAN SHEET.

Y&C TRANSPORTATION CONSULTANTS, INC. 3250 Ramos Circle Sacramento, CA 95827	VTA 3331 N First St Building B San Jose, CA 95134

NOTES

1. WELDING MUST COMPLY WITH STANDARD SPECIFICATION SECTION 75 MISCELLANEOUS METAL.
2. CONDUITS ENTERING THE PULL BOX MUST BE ENCASED IN PCC (3" ALL AROUND). PCC ENCASEMENT MUST EXTEND 5'-6" FROM THE PULL BOX.
3. FOR ADDITIONAL NOTES AND DETAILS, SEE STANDARD PLANS RSP ES-8B.

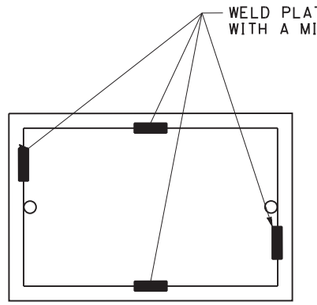

TOP VIEW

TRAFFIC PULL BOX WELDING DETAIL

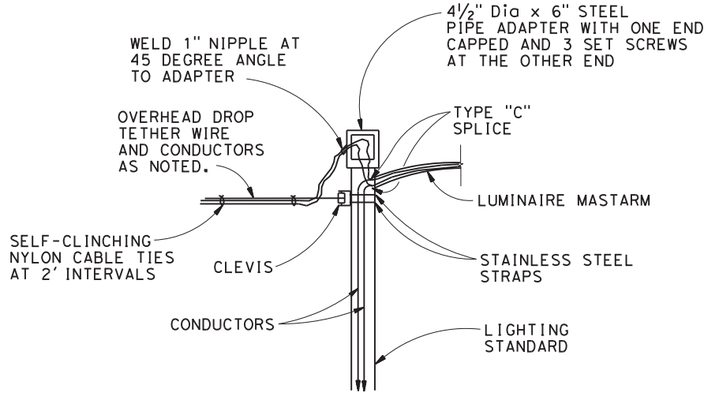

TYPICAL OVERHEAD DROP INSTALLATION DETAIL

ELECTRICAL SYSTEMS DETAILS

NO SCALE

ED-7

CALCULATED-DESIGNED BY
CHECKED BY
REVISED BY — MENG YANG
DATE REVISED — DAN YAU
CONSULTANT FUNCTIONAL SUPERVISOR — TIMOTHY J. LEE
STATE OF CALIFORNIA - DEPARTMENT OF TRANSPORTATION — Caltrans

LAST REVISION 00-00-00
DATE PLOTTED => $DATE
TIME PLOTTED => $TIME

BORDER LAST REVISED 7/2/2010
USERNAME => $USER
DGN FILE => $REQUEST
RELATIVE BORDER SCALE IS IN INCHES 0 1 2 3
UNIT 0712
PROJECT NUMBER & PHASE 0413000204

Dist	COUNTY	ROUTE	POST MILES TOTAL PROJECT	SHEET No.	TOTAL SHEETS
04	SCL	101,237	45.2/45.8, 2.7/3.3	554	736

REGISTERED CIVIL ENGINEER — DATE 6-13-18

PLANS APPROVAL DATE 6-20-18

REGISTERED PROFESSIONAL ENGINEER — KIN Y. CHAN No. 55391 Exp. 12/31/18 CIVIL — STATE OF CALIFORNIA

THE STATE OF CALIFORNIA OR ITS OFFICERS OR AGENTS SHALL NOT BE RESPONSIBLE FOR THE ACCURACY OR COMPLETENESS OF SCANNED COPIES OF THIS PLAN SHEET.

Y&C TRANSPORTATION CONSULTANTS, INC.
3250 Ramos Circle
Sacramento, CA 95827

VTA
3331 N First St
Building B
San Jose, CA 95134

NOTES: (THIS SHEET ONLY)

1. PORTLAND CEMENT CONCRETE FLOOR OVER CLEAN CRUSHED ROCK SUMP. BOTTOM OF VAULT MUST BE SLOPED TOWARD THE DRAIN PIPE AND MUST HAVE A SMOOTH FINISH.
2. CONCRETE MUST CONTAIN A MINIMUM OF 550 lb OF PORTLAND CEMENT PER CUBIC YARD.
3. VAULT, VAULT EXTENSION AND VAULT COVER MUST BE QUAZITE OR APPROVED EQUIVALENT, AND SUPPORT MINIMUM TEST LOAD OF 25,000 lb. IF VAULT IS LOCATED IN TRAVEL WAY, VAULT AND COVER MUST CONFORM WITH VERTICAL PROOF LOAD STRENGTH REQUIREMENT UNDER SECTION 86-1.02(C)3.
4. SEE RSP ES-8A FOR VAULT COVER CAPTIVE BOLT AND VAULT THREADED INSERT DETAILS.
5. MARK "SUNNYVALE FIBER OPTIC COMMUNICATIONS" ON THE TOP FACE OF ALL COVERS.
6. MINIMUM VAULT DEPTH MUST BE 20". IF NECESSARY, AN EXTENSION MAY BE USED TO MEET THE REQUIREMENT.
7. CONDUITS MUST ENTER THROUGH KNOCKOUTS. IF MORE THAN 3 CONDUITS ARE REQUIRED IN SAME KNOCKOUT, KNOCKOUT MUST BE WIDENED TO 3/8" MORE THAN THE CONDUIT COMBINATION.
8. TRUNK LINE CONDUITS FROM THE TYPICAL BORE OR TRENCH SECTION MUST NOT DEFLECT BY MORE THAN 1' PER 10' FROM THE ALIGNMENT PRECEDING OR FOLLOWING VAULT ENTRANCE/EXIT.
9. BOTTOM OF CONDUIT CENTERLINE MUST BE ALIGNED TO EXIT TOP OF VAULT TO FACILITATE CABLE PULLING. IF EXISTING CONDUIT USED, MODIFY CONDUIT TO MATCH SWEEP AS SHOWN. IF NEW CONDUIT IS USED, INSTALL CONDUIT ELBOW AS SHOWN.
10. THE CONDUITS MUST HAVE THREADED BUSHINGS. PVC AND HDPE CONDUITS MUST HAVE BELL ENDS.
11. IF APPLICABLE, VAULT HEIGHT ABOVE EXISTING DIRT GRADE MUST PERMIT 1" OF FUTURE SURFACE LANDSCAPING. WHEN VAULT IS INSTALLED IN EXISTING SIDEWALK, VAULT COVER MUST SIT FLUSH WITH THE PAVEMENT.
12. VAULT MUST BE FURNISHED WITH TWO RACKS AND HOOKS INSTALLED ON EACH OF THE TWO LONG SIDES.
13. SPLICE ENCLOSURES IN FIBER OPTIC VAULT MUST BE USED ONLY WHERE SHOWN. SPLICE ENCLOSURE MUST BE ATTACHED TO THE RACK AND HOOK ASSEMBLY.
14. PROVIDE PERMANENT MARKERS FOR FIBER OPTIC VAULT.

LEGEND:

1. FIBER OPTIC SPLICE ENCLOSURE.
2. FIBER OPTIC VAULT COVER.
3. RACK & HOOK ASSEMBLY, SEE NOTE 12.
4. 45 DEGREE ELBOW, 3' RADIUS MINIMUM. ELBOW AND COUPLING MAY NOT BE NECESSARY FOR NEW CONDUIT INSTALLED BY DIRECTIONAL BORING. NEW CONDUIT INSTALLED BY DIRECTIONAL DRILLING MUST ENTER THE PULL BOX WITH A BENDING RADIUS OF 3' MINIMUM.
5. WARNING TAPE (FOR NEW CONDUIT INSTALLED BY TRENCHING).

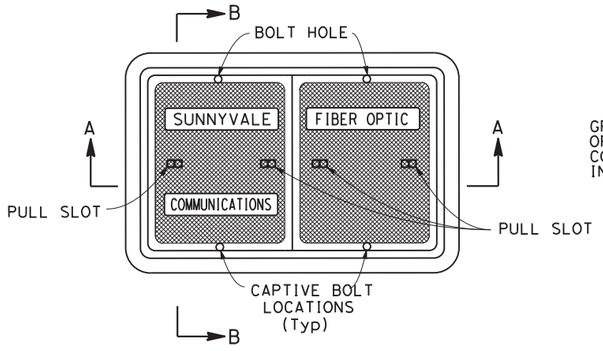

PLAN VIEW

FOR EACH PIECE OF COVER,
SEE RSP ES-8A COVER TOP VIEW FOR OTHER DETAILS

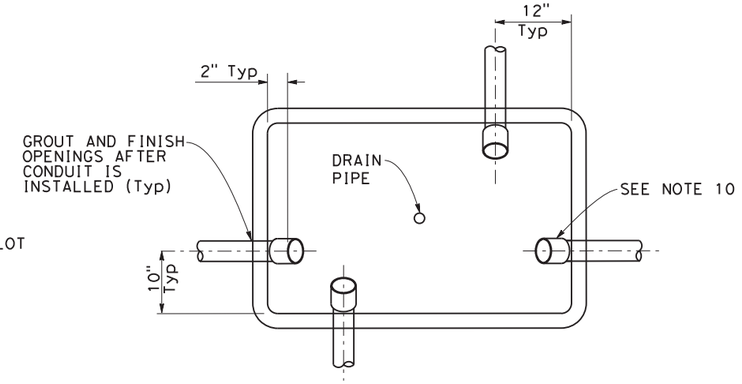

PLAN VIEW WITHOUT COVER

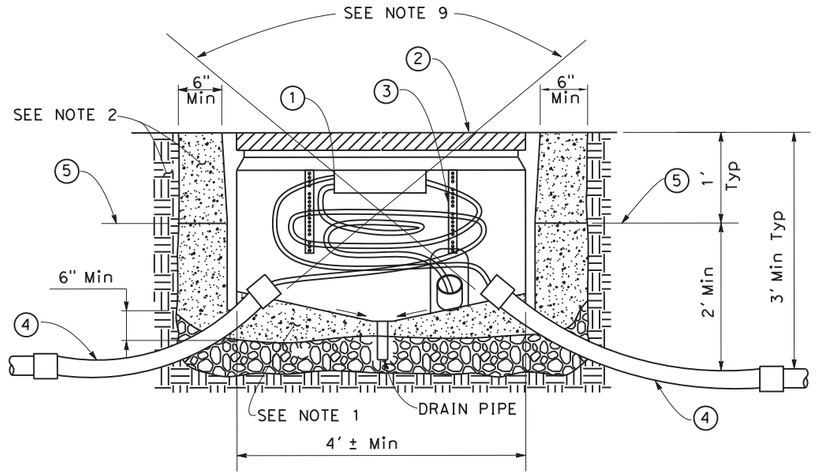

SECTION A-A

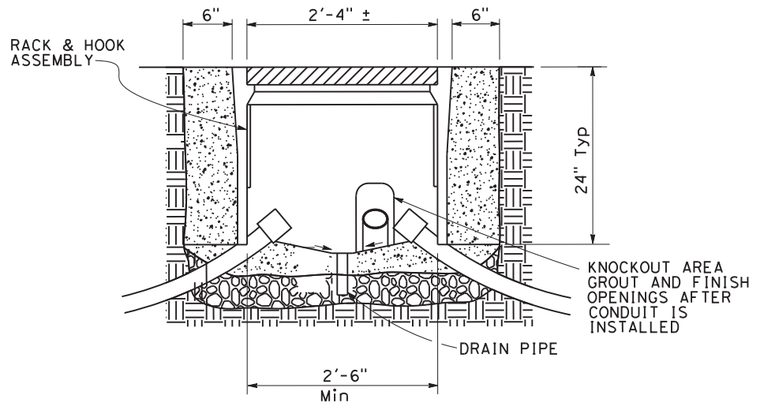

SECTION B-B

FIBER OPTIC VAULT

ELECTRICAL SYSTEMS DETAILS

NO SCALE

ED-8

STATE OF CALIFORNIA - DEPARTMENT OF TRANSPORTATION — Caltrans

CONSULTANT FUNCTIONAL SUPERVISOR: TIMOTHY J. LEE

CALCULATED-DESIGNED BY: MENG YANG
CHECKED BY: DAN YAU

REVISED BY | DATE REVISED

LAST REVISION 00-00-00
DATE PLOTTED => $DATE
TIME PLOTTED => $TIME

BORDER LAST REVISED 7/2/2010

USERNAME => $USER
DGN FILE => $REQUEST

RELATIVE BORDER SCALE IS IN INCHES 0 1 2 3

UNIT 0712

PROJECT NUMBER & PHASE 0413000204

Dist	COUNTY	ROUTE	POST MILES TOTAL PROJECT	SHEET No.	TOTAL SHEETS
04	SCL	101,237	45.2/45.8, 2.7/3.3	555	736

6-13-18
REGISTERED CIVIL ENGINEER DATE

6-20-18
PLANS APPROVAL DATE

REGISTERED PROFESSIONAL ENGINEER
KIN Y. CHAN
No. 55391
Exp. 12/31/18
CIVIL
STATE OF CALIFORNIA

THE STATE OF CALIFORNIA OR ITS OFFICERS OR AGENTS SHALL NOT BE RESPONSIBLE FOR THE ACCURACY OR COMPLETENESS OF SCANNED COPIES OF THIS PLAN SHEET.

Y&C TRANSPORTATION CONSULTANTS, INC.
3250 Ramos Circle
Sacramento, CA 95827

VTA
3331 N First St
Building B
San Jose, CA 95134

NOTE:

THIS PLAN IS FOR INFORMATION ONLY. EXACT FIBER OPTIC CABLE ASSIGNMENT MUST BE DETERMINED BY THE ENGINEER.

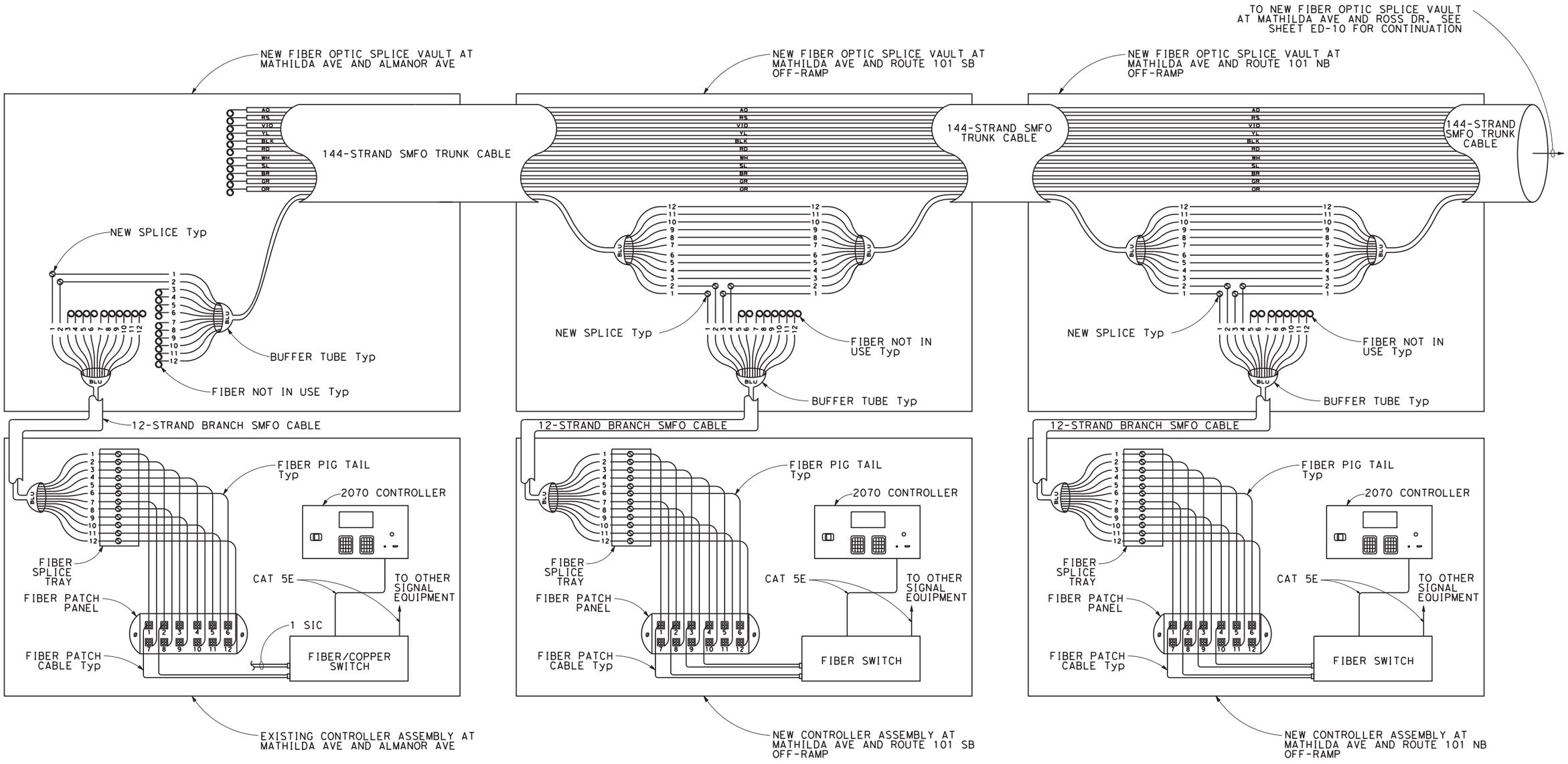

ELECTRICAL SYSTEMS DETAILS

NO SCALE

ED-9

REVISED BY | DATE REVISED
MENG YANG | DAN YAU
CALCULATED-DESIGNED BY | CHECKED BY
CONSULTANT FUNCTIONAL SUPERVISOR: TIMOTHY J. LEE
STATE OF CALIFORNIA - DEPARTMENT OF TRANSPORTATION
Caltrans

LAST REVISION 00-00-00 | DATE PLOTTED => $DATE | TIME PLOTTED => $TIME

BORDER LAST REVISED 7/2/2010 | USERNAME => $USER | DGN FILE => $REQUEST | RELATIVE BORDER SCALE IS IN INCHES 0 1 2 3 | UNIT 0712 | PROJECT NUMBER & PHASE 0413000204

NOTE:

THIS PLAN IS FOR INFORMATION ONLY. EXACT FIBER OPTIC CABLE ASSIGNMENT MUST BE DETERMINED BY THE ENGINEER.

Dist	COUNTY	ROUTE	POST MILES TOTAL PROJECT	SHEET No.	TOTAL SHEETS
04	SCL	101,237	45.2/45.8, 2.7/3.3	556	736

6-13-18
REGISTERED CIVIL ENGINEER DATE

6-20-18
PLANS APPROVAL DATE

REGISTERED PROFESSIONAL ENGINEER
KIN Y. CHAN
No. 55391
Exp. 12/31/18
CIVIL
STATE OF CALIFORNIA

THE STATE OF CALIFORNIA OR ITS OFFICERS OR AGENTS SHALL NOT BE RESPONSIBLE FOR THE ACCURACY OR COMPLETENESS OF SCANNED COPIES OF THIS PLAN SHEET.

Y&C TRANSPORTATION CONSULTANTS, INC. 3250 Ramos Circle Sacramento, CA 95827	VTA 3331 N First St Building B San Jose, CA 95134

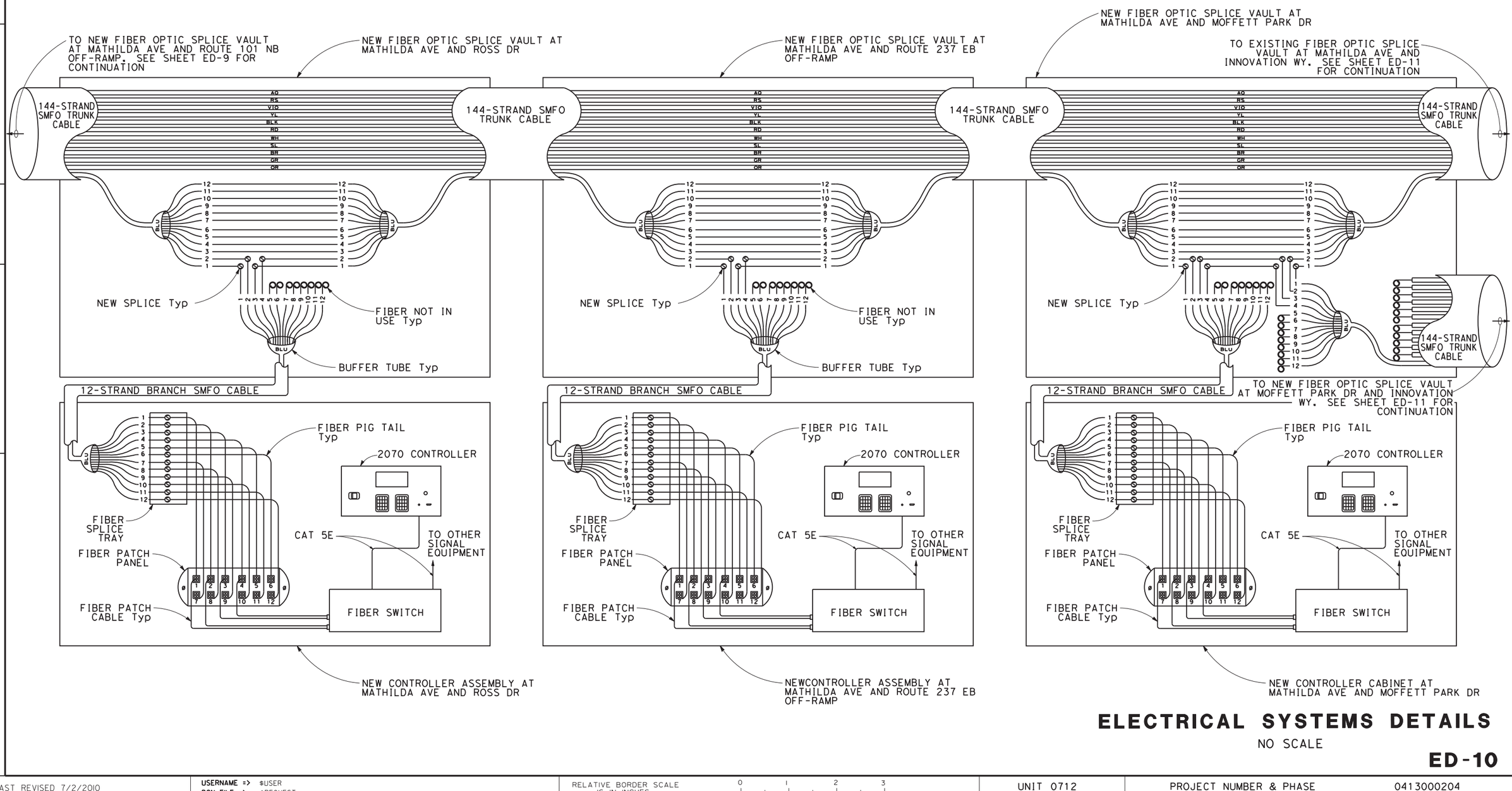

ELECTRICAL SYSTEMS DETAILS

NO SCALE

ED-10

REVISED BY	DATE REVISED
MENG YANG	DAN YAU

CALCULATED-DESIGNED BY | CHECKED BY

CONSULTANT FUNCTIONAL SUPERVISOR: TIMOTHY J. LEE

STATE OF CALIFORNIA - DEPARTMENT OF TRANSPORTATION

Caltrans

LAST REVISION 00-00-00 | DATE PLOTTED => $DATE | TIME PLOTTED => $TIME

BORDER LAST REVISED 7/2/2010 | USERNAME => $USER | DGN FILE => $REQUEST | RELATIVE BORDER SCALE IS IN INCHES 0 1 2 3 | UNIT 0712 | PROJECT NUMBER & PHASE 0413000204

Dist	COUNTY	ROUTE	POST MILES TOTAL PROJECT	SHEET No.	TOTAL SHEETS
04	SCL	101,237	45.2/45.8, 2.7/3.3	557	736

6-13-18
REGISTERED CIVIL ENGINEER — DATE

REGISTERED PROFESSIONAL ENGINEER
KIN Y. CHAN
No. 55391
Exp. 12/31/18
CIVIL
STATE OF CALIFORNIA

6-20-18
PLANS APPROVAL DATE

THE STATE OF CALIFORNIA OR ITS OFFICERS OR AGENTS SHALL NOT BE RESPONSIBLE FOR THE ACCURACY OR COMPLETENESS OF SCANNED COPIES OF THIS PLAN SHEET.

Y&C TRANSPORTATION CONSULTANTS, INC.
3250 Ramos Circle
Sacramento, CA 95827

VTA
3331 N First St
Building B
San Jose, CA 95134

NOTE:

THIS PLAN IS FOR INFORMATION ONLY. EXACT FIBER OPTIC CABLE ASSIGNMENT MUST BE DETERMINED BY THE ENGINEER.

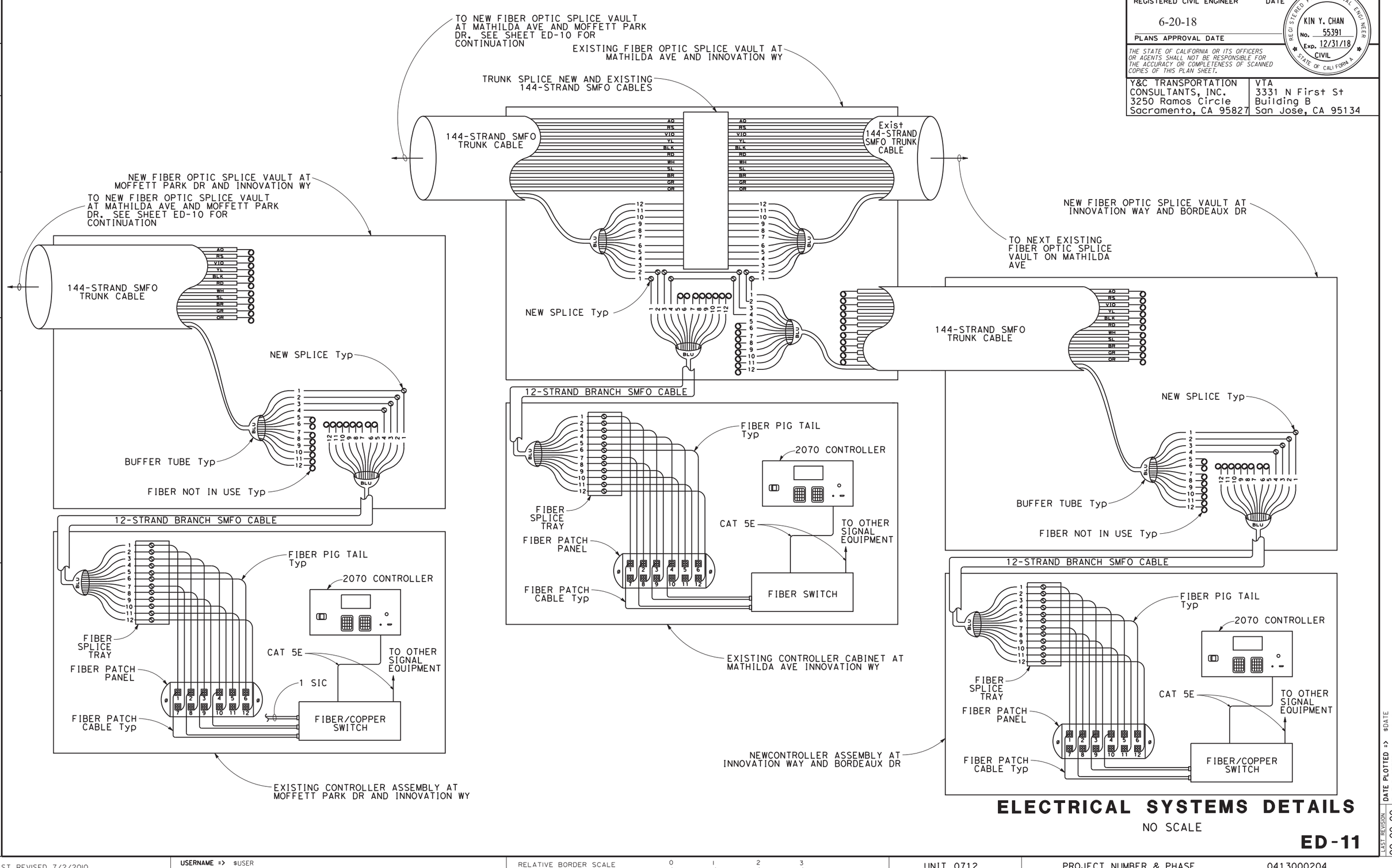

ELECTRICAL SYSTEMS DETAILS

NO SCALE

ED-11

STATE OF CALIFORNIA - DEPARTMENT OF TRANSPORTATION
CONSULTANT FUNCTIONAL SUPERVISOR: TIMOTHY J. LEE
CALCULATED-DESIGNED BY: MENG YANG
CHECKED BY: DAN YAU
REVISED BY / DATE REVISED

LAST REVISION 00-00-00
DATE PLOTTED => $DATE
TIME PLOTTED => $TIME

BORDER LAST REVISED 7/2/2010
USERNAME => $USER
DGN FILE => $REQUEST
RELATIVE BORDER SCALE IS IN INCHES 0 1 2 3
UNIT 0712
PROJECT NUMBER & PHASE 0413000204

NOTE:

FOR INFORMATION ONLY. ELECTRICAL SYSTEMS QUANTITY TABLES SUMMARIZE SIGNIFICANT COMPONENTS. SEE ELECTRICAL SYSTEMS PLANS AND SPECIFICATIONS TO DETERMINE ALL MATERIALS NEEDED FOR EACH SYSTEM.

Dist	COUNTY	ROUTE	POST MILES TOTAL PROJECT	SHEET No.	TOTAL SHEETS
04	SCL	101,237	45.2/45.8, 2.7/3.3	558	736

6-13-18
REGISTERED CIVIL ENGINEER — DATE

6-20-18
PLANS APPROVAL DATE

REGISTERED PROFESSIONAL ENGINEER
KIN Y. CHAN
No. 55391
Exp. 12/31/18
CIVIL
STATE OF CALIFORNIA

THE STATE OF CALIFORNIA OR ITS OFFICERS OR AGENTS SHALL NOT BE RESPONSIBLE FOR THE ACCURACY OR COMPLETENESS OF SCANNED COPIES OF THIS PLAN SHEET.

Y&C TRANSPORTATION CONSULTANTS, INC.
3250 Ramos Circle
Sacramento, CA 95827

VTA
3331 N First St
Building B
San Jose, CA 95134

MODIFYING EXISTING ELECTRICAL SYSTEM

SHEET No.	SERVICE EQUIPMENT ENCLOSURE AND FOUNDATION	TYPE 1-B Std AND FOUNDATION	TYPE 15-FBS Std AND FOUNDATION	TYPE 21 Std AND FOUNDATION	TYPE 30 Std AND FOUNDATION	TYPE 32 Std AND FOUNDATION	235 W LED Lum	PEU	FLASHING BEACON	1-SECTION 8" SIGNAL HEAD	3-SECTION 8" SIGNAL HEAD	3-SECTION 12" SIGNAL HEAD	TV-2-T SIGNAL MOUNT	SV-1-T SIGNAL MOUNT	DETECTOR LOOP	No. 5 PB	No. 5(T) PB	No. 6(T) PB	No. 9 PB	1½" CONDUIT	2" CONDUIT	2" TYPE 1 CONDUIT	3" CONDUIT	#2 AWG	#6 AWG	#8 AWG	#10 AWG	#14 AWG	TC	DLC
	EA	EA	EA	EA	EA	EA	EA	EA	EA	EA	EA	EA	EA	EA	EA	EA	EA	EA	EA	LF	LF	LF	LF	LF	LF	LF	LF	LF	LF	LF
E-6	1	1			1	1	2	1									6				820		55	30		2270		45		
E-9																	1			40						100				
E-11				2			2												3	35	35	390				1790				
E-12			7						14						5	1	9	3	2		1965				950	730	1860		2520	1430
E-13		1	4						8	1	1	1	1	1	12	5	3	2	2		1505		60			60	770			4890
E-14			3						6						2		2				150						540			1260
E-15															2		2			240	240				1500					430
E-16															1						15									
E-17															6		2				75		115							2920

LIGHTING (CITY STREET)

SHEET No.	SERVICE EQUIPMENT ENCLOSURE AND FOUNDATION	SINGLE ARM CITY STREET Lgt Std	DUAL ARM CITY STREET Lgt Std	CITY STREET Lgt FOUNDATION	108 W LED Lum	PEU	SERVICE UTILITY PB	No. 3½ PB	No. 3½(T) PB	No. 5 PB	No. 9 PB	2" TYPE 1 CONDUIT	2" CONDUIT	3" CONDUIT	#2 AWG	#6 AWG	#8 AWG	#14 AWG
	EA	EA	EA	EA	EA	EA	EA	EA	EA	EA	EA	LF	LF	LF	LF	LF	LF	LF
E-18		4	3	7	10			10				70	960				3790	
E-19	1	7	3	10	13	1	1	10		3	4	700	1395	5	90	7790	410	450
E-20	1		5	5	10	1		15	1	1			2400			7820	1740	480
E-21			4	4	8			4					465			1860		
E-22								3					395			1200		

ELECTRICAL SYSTEMS QUANTITIES

EQ-1

MENG YANG — DESIGNED BY
DAN YAU — CALCULATED-DESIGNED BY
CHECKED BY
REVISED BY
DATE REVISED
CONSULTANT FUNCTIONAL SUPERVISOR
TIMOTHY J. LEE
STATE OF CALIFORNIA - DEPARTMENT OF TRANSPORTATION
Caltrans

LAST REVISION 00-00-00
DATE PLOTTED => $DATE
TIME PLOTTED => $TIME

BORDER LAST REVISED 7/2/2010
USERNAME => $USER
DGN FILE => $REQUEST
RELATIVE BORDER SCALE IS IN INCHES 0 1 2 3
UNIT 0712
PROJECT NUMBER & PHASE 0413000204

NOTE:

FOR INFORMATION ONLY. ELECTRICAL SYSTEMS QUANTITY TABLES SUMMARIZE SIGNIFICANT COMPONENTS. SEE ELECTRICAL SYSTEMS PLANS AND SPECIFICATIONS TO DETERMINE ALL MATERIALS NEEDED FOR EACH SYSTEM.

SIGNAL AND LIGHTING (CITY STREET LOCATION 1)

SHEET No.	26-4-100 Std AND FOUNDATION	61-5-100 Std AND FOUNDATION	TYPE 15TS/15D Std AND FOUNDATION	TYPE 1-B Std AND FOUNDATION	PBA POST AND FOUNDATION	TYPE A LOOP DETECTOR	3-SECTION 12" SIGNAL HEADS	LED PEDESTRIAN SIGNAL	R3-1 LED BLANK-OUT SIGN	APS	LED Lum	CCTV SYSTEM	THERMAL PEDESTRIAN DETECTION SYSTEM	THERMAL VEHICLE DETECTION SYSTEM	No. 5 PB	No. 6 PB	No. 6(E) PB	N48 PB	FO SPLICE ENCLOSURE	RED RAT BOX	BLUE RAT BOX	2" CONDUIT	3" CONDUIT	#8 AWG	#10 AWG	#14 AWG	DLC
	EA	EA	EA	EA	EA	EA	EA	EA	EA	EA	EA	EA	EA	EA	EA	EA	EA	EA	EA	EA	EA	LF	LF	LF	LF	LF	LF
E-24	1	1	3	2	2	4	14	6	2	6	6	1	1	1	7	6	2	1	1	1	2	495	1135	2925	1510	12715	2930

SIGNAL AND LIGHTING (CITY STREET LOCATION 2)

SHEET No.	SERVICE EQUIPMENT ENCLOSURE AND FOUNDATION	CONTROLLER ASSEMBLY	STAND-ALONE BBS WITH BATTERY	19-4-100 Std AND FOUNDATION	26-4-100 Std AND FOUNDATION	TYPE 15TS Std AND FOUNDATION	TYPE 1-B Std AND FOUNDATION	TYPE A LOOP DETECTOR	LED Lum	CCTV CAMERA SYSTEM	GPS EVUD SYSTEM	THERMAL VIDEO DETECTION SYSTEM	No. 5 PB	No. 6 PB	No. 6(E) PB	FO VAULT WITH SPLICE ENCLOSURE	2" CONDUIT	3" CONDUIT	#2 AWG	#6 AWG	#8 AWG	#10 AWG	#14 AWG	DLC
	EA	EA	EA	EA	EA	EA	EA	EA	EA	EA	EA	EA	EA	EA	EA	EA	LF	LF	LF	LF	LF	LF	LF	LF
E-26	1	1	1	1	2	2	1	7	4	1	1	1	10	5	3	1	750	1290	885	20	2895	1080	3405	495

SIGNAL AND LIGHTING (CITY STREET LOCATION 3)

SHEET No.	SERVICE EQUIPMENT ENCLOSURE AND FOUNDATION	CONTROLLER ASSEMBLY	STAND-ALONE BBS WITH BATTERY	19-4-100 Std AND FOUNDATION	26-4-100 Std AND FOUNDATION	29-5-100 Std AND FOUNDATION	TYPE 15TS Std AND FOUNDATION	TYPE 1-B Std AND FOUNDATION	PBA POST AND FOUNDATION	TYPE A LOOP DETECTOR	APS	LED Lum	CCTV CAMERA SYSTEM	GPS EVUD SYSTEM	THERMAL VIDEO DETECTION SYSTEM	THERMAL PEDESTRIAN DETECTION SYSTEM	No. 5 PB	No. 5(T) PB	No. 6 PB	No. 6(E) PB	FO VAULT WITH SPLICE ENCLOSURE	2" CONDUIT	2" TYPE 1 CONDUIT	3" CONDUIT	4" CONDUIT	#2 AWG	#6 AWG	#8 AWG	#10 AWG	#14 AWG	DLC
	EA	EA	EA	EA	EA	EA	EA	EA	EA	EA	EA	EA	EA	EA	EA	EA	EA	EA	EA	EA	EA	LF	LF	LF	LF	LF	LF	LF	LF	LF
E-28	1	1	1	1	1	1	3	1	1	7	2	5	1	1	1	1	7	1	3	2	1	595	455	935	220	255	20	2020	1010	8365	2230

ELECTRICAL SYSTEMS QUANTITIES

EQ-2

Dist	COUNTY	ROUTE	POST MILES TOTAL PROJECT	SHEET No.	TOTAL SHEETS
04	SCL	101,237	45.2/45.8, 2.7/3.3	559	736

6-13-18
REGISTERED CIVIL ENGINEER — DATE

6-20-18
PLANS APPROVAL DATE

REGISTERED PROFESSIONAL ENGINEER — KIN Y. CHAN No. 55391 Exp. 12/31/18 CIVIL — STATE OF CALIFORNIA

THE STATE OF CALIFORNIA OR ITS OFFICERS OR AGENTS SHALL NOT BE RESPONSIBLE FOR THE ACCURACY OR COMPLETENESS OF SCANNED COPIES OF THIS PLAN SHEET.

Y&C TRANSPORTATION CONSULTANTS, INC.
3250 Ramos Circle
Sacramento, CA 95827

VTA
3331 N First St
Building B
San Jose, CA 95134

REVISED BY | DATE REVISED
MENG YANG | DAN YAU
CALCULATED-DESIGNED BY | CHECKED BY
CONSULTANT FUNCTIONAL SUPERVISOR: TIMOTHY J. LEE
STATE OF CALIFORNIA - DEPARTMENT OF TRANSPORTATION

DATE PLOTTED => $DATE
TIME PLOTTED => $TIME
LAST REVISION 00-00-00

BORDER LAST REVISED 7/2/2010 | USERNAME => $USER | DGN FILE => $REQUEST | RELATIVE BORDER SCALE IS IN INCHES 0 1 2 3 | UNIT 0712 | PROJECT NUMBER & PHASE 0413000204

NOTE:

FOR INFORMATION ONLY. ELECTRICAL SYSTEMS QUANTITY TABLES SUMMARIZE SIGNIFICANT COMPONENTS. SEE ELECTRICAL SYSTEMS PLANS AND SPECIFICATIONS TO DETERMINE ALL MATERIALS NEEDED FOR EACH SYSTEM.

SIGNAL AND LIGHTING (CITY STREET LOCATION 4)

SHEET No.	SERVICE EQUIPMENT ENCLOSURE AND FOUNDATION	CONTROLLER ASSEMBLY	STAND-ALONE BBS WITH BATTERY	29-5-100 Std AND FOUNDATION	61-5-100 Std AND FOUNDATION	TYPE 15TS Std AND FOUNDATION	TYPE 1-B Std AND FOUNDATION	TYPE A LOOP DETECTOR	APS	LED Lum	CCTV CAMERA SYSTEM	GPS EVUD SYSTEM	THERMAL VIDEO DETECTION SYSTEM	THERMAL PEDESTRIAN DETECTION SYSTEM	No. 5 PB	No. 6 PB	No. 6(E) PB	FO VAULT WITH SPLICE ENCLOSURE	2" CONDUIT	3" CONDUIT	4" CONDUIT	#2 AWG	#6 AWG	#8 AWG	#10 AWG	#14 AWG	DLC
	EA	EA	EA	EA	EA	EA	EA	EA	EA	EA	EA	EA	EA	EA	EA	EA	EA	EA	LF	LF	LF	LF	LF	LF	LF	LF	LF
E-31	1	1	1	2	2	4	1	7	6	8	1	1	1	1	4	9	4	1	780	835	650	450	20	2395	1530	14760	3560

SIGNAL AND LIGHTING (CITY STREET LOCATION 5)

SHEET No.	SERVICE EQUIPMENT ENCLOSURE AND FOUNDATION	CONTROLLER ASSEMBLY	STAND-ALONE BBS WITH BATTERY	19-4-100 Std AND FOUNDATION	29-5-100 Std AND FOUNDATION	61-5-100 Std AND FOUNDATION	TYPE 15TS Std AND FOUNDATION	TYPE 1-B Std AND FOUNDATION	TYPE A LOOP DETECTOR	APS	LED Lum	CCTV CAMERA SYSTEM	GPS EVUD SYSTEM	THERMAL VIDEO DETECTION SYSTEM	THERMAL PEDESTRIAN DETECTION SYSTEM	No. 5 PB	No. 5(T) PB	No. 6 PB	No. 6(E) PB	No. 6(T) PB	FO VAULT WITH SPLICE ENCLOSURE	2" CONDUIT	3" CONDUIT	4" CONDUIT	#2 AWG	#6 AWG	#8 AWG	#10 AWG	#14 AWG	DLC
	EA	EA	EA	EA	EA	EA	EA	EA	EA	EA	EA	EA	EA	EA	EA	EA	EA	EA	EA	EA	EA	LF	LF	LF	LF	LF	LF	LF	LF	LF
E-34	1	1	1	1	1	1	2	1	11	2	5	1	1	1	1	8	2	6	1	1	1165	835	60	900	40	1830	910	6160	4240

SIGNAL AND LIGHTING (CITY STREET LOCATION 7)

SHEET No.	SERVICE EQUIPMENT ENCLOSURE AND FOUNDATION	CONTROLLER ASSEMBLY	STAND-ALONE BBS WITH BATTERY	19-4-100 Std AND FOUNDATION	26-4-100 Std AND FOUNDATION	61-5-100 Std AND FOUNDATION	TYPE 15TS Std AND FOUNDATION	TYPE A LOOP DETECTOR	APS	LED Lum	GPS EVUD SYSTEM	THERMAL VIDEO DETECTION SYSTEM	THERMAL PEDESTRIAN DETECTION SYSTEM	No. 5 PB	No. 5(T) PB	No. 6 PB	No. 6(E) PB	No. 6(T) PB	FO VAULT WITH SPLICE ENCLOSURE	No. 9 PB	2" CONDUIT	3" CONDUIT	4" CONDUIT	#2 AWG	#6 AWG	#8 AWG	#10 AWG	#14 AWG	DLC
	EA	EA	EA	EA	EA	EA	EA	EA	EA	EA	EA	EA	EA	EA	EA	EA	EA	EA	EA	EA	LF	LF	LF	LF	LF	LF	LF	LF	LF
E-38	1	1	1	1	1	2	4	8	4	8	1	1	1	11	1	8	3	1	1	1	1215	1610	450	570	20	2550	1560	11400	3995

Dist	COUNTY	ROUTE	POST MILES TOTAL PROJECT	SHEET No.	TOTAL SHEETS
04	SCL	101,237	45.2/45.8, 2.7/3.3	560	736

6-13-18
REGISTERED CIVIL ENGINEER — DATE

REGISTERED PROFESSIONAL ENGINEER
KIN Y. CHAN
No. 55391
Exp. 12/31/18
CIVIL
STATE OF CALIFORNIA

6-20-18
PLANS APPROVAL DATE

THE STATE OF CALIFORNIA OR ITS OFFICERS OR AGENTS SHALL NOT BE RESPONSIBLE FOR THE ACCURACY OR COMPLETENESS OF SCANNED COPIES OF THIS PLAN SHEET.

Y&C TRANSPORTATION CONSULTANTS, INC.
3250 Ramos Circle
Sacramento, CA 95827

VTA
3331 N First St
Building B
San Jose, CA 95134

REVISED BY | DATE REVISED
MENG YANG | DAN YAU

CALCULATED-DESIGNED BY | CHECKED BY
TIMOTHY J. LEE

CONSULTANT FUNCTIONAL SUPERVISOR

STATE OF CALIFORNIA - DEPARTMENT OF TRANSPORTATION
Caltrans

ELECTRICAL SYSTEMS QUANTITIES

EQ-3

LAST REVISION 00-00-00 | DATE PLOTTED => $DATE | TIME PLOTTED => $TIME

BORDER LAST REVISED 7/2/2010 | USERNAME => $USER | DGN FILE => $REQUEST | RELATIVE BORDER SCALE IS IN INCHES 0 1 2 3 | UNIT 0712 | PROJECT NUMBER & PHASE 0413000204

NOTE:

FOR INFORMATION ONLY. ELECTRICAL SYSTEMS QUANTITY TABLES SUMMARIZE SIGNIFICANT COMPONENTS. SEE ELECTRICAL SYSTEMS PLANS AND SPECIFICATIONS TO DETERMINE ALL MATERIALS NEEDED FOR EACH SYSTEM.

SIGNAL AND LIGHTING (CITY STREET LOCATION 8)

SHEET No.	TYPE A LOOP DETECTOR	3" CONDUIT	#8 AWG	#14 AWG	144-STRAND FO CABLE	DLC
	EA	LF	LF	LF	LF	LF
E-40	5	420	440	4730	200	2855

SIGNAL AND LIGHTING (CITY STREET LOCATION 9)

SHEET No.	TYPE A LOOP DETECTOR	LED Lum	CCTV CAMERA SYSTEM	THERMAL VIDEO DETECTION SYSTEM	No. 5(T) PB	No. 6(T) PB	FO VAULT WITH SPLICE ENCLOSURE	2" CONDUIT	3" CONDUIT	#14 AWG	12-STRAND FO CABLE	144-STRAND FO CABLE	DLC
	EA	EA	EA	EA	EA	EA	EA	LF	LF	LF	LF	LF	LF
E-42	2	5	1	1	1	1	1	240	450	1530	80	625	1010

SIGNAL AND LIGHTING (CITY STREET LOCATION 10)

SHEET No.	SERVICE EQUIPMENT ENCLOSURE AND FOUNDATION	CONTROLLER ASSEMBLY	19-4-100 Std AND FOUNDATION	24-4-100 Std FOUNDATION	TYPE 1-B Std AND FOUNDATION	TYPE A LOOP DETECTOR	APS	LED Lum	No. 5 PB	No. 6 PB	No. 6(E) PB	2" CONDUIT	3" CONDUIT	4" CONDUIT	#2 AWG	#6 AWG	#8 AWG	#10 AWG	#14 AWG	DLC
	EA	EA	EA	EA	EA	EA	EA	EA	EA	EA	EA	LF	LF	LF	LF	LF	LF	LF	LF	LF
E-44	1	1	2	2	3	1	8	4	6	4	2	1170	100	220	30	40	835	550	6725	605

Dist	COUNTY	ROUTE	POST MILES TOTAL PROJECT	SHEET No.	TOTAL SHEETS
04	SCL	101,237	45.2/45.8, 2.7/3.3	561	736

6-13-18
REGISTERED CIVIL ENGINEER — DATE

6-20-18
PLANS APPROVAL DATE

REGISTERED PROFESSIONAL ENGINEER — KIN Y. CHAN — No. 55391 — Exp. 12/31/18 — CIVIL — STATE OF CALIFORNIA

THE STATE OF CALIFORNIA OR ITS OFFICERS OR AGENTS SHALL NOT BE RESPONSIBLE FOR THE ACCURACY OR COMPLETENESS OF SCANNED COPIES OF THIS PLAN SHEET.

Y&C TRANSPORTATION CONSULTANTS, INC.
3250 Ramos Circle
Sacramento, CA 95827

VTA
3331 N First St
Building B
San Jose, CA 95134

REVISED BY | DATE REVISED
MENG YANG | DAN YAU
CALCULATED-DESIGNED BY | CHECKED BY
CONSULTANT FUNCTIONAL SUPERVISOR: TIMOTHY J. LEE
STATE OF CALIFORNIA - DEPARTMENT OF TRANSPORTATION
Caltrans

ELECTRICAL SYSTEMS QUANTITIES

EQ-4

LAST REVISION 00-00-00 | DATE PLOTTED => $DATE | TIME PLOTTED => $TIME

BORDER LAST REVISED 7/2/2010 | USERNAME => $USER | DGN FILE => $REQUEST | RELATIVE BORDER SCALE IS IN INCHES 0 1 2 3 | UNIT 0712 | PROJECT NUMBER & PHASE 0413000204

© 2017 California Department of Transportation
All Rights Reserved

Dist	COUNTY	ROUTE	POST MILES TOTAL PROJECT	SHEET No.	TOTAL SHEETS
04	SCL	101,237	45.2/45.8 2.7/3.3	562	736

Jeffrey C. Kepley
REGISTERED CIVIL ENGINEER

July 21, 2017
PLANS APPROVAL DATE

REGISTERED PROFESSIONAL ENGINEER — Jeff C. Kepley — No. 53361 — Exp. 6-30-19 — CIVIL — STATE OF CALIFORNIA

THE STATE OF CALIFORNIA OR ITS OFFICERS OR AGENTS SHALL NOT BE RESPONSIBLE FOR THE ACCURACY OR COMPLETENESS OF SCANNED COPIES OF THIS PLAN SHEET.

TO ACCOMPANY PLANS DATED _____

WATER POLLUTION CONTROL

- Temp HIGH-VISIBILITY FENCE (THVF)
- Temp SILT FENCE (TSF)
- Temp Reinf SILT FENCE (TRSF)
- Temp FIBER ROLL (TFR)
- Temp GRAVEL BAG BERM (TGBB)
- Temp STRAW BALE BARRIER (TSBB)
- Temp SLOPE DRAIN FLEX PIPE
- Temp EARTH BERM
- Temp DITCH/SWALE
- Temp CONCRETE WASHOUT (WASH)
- Temp DRAINAGE INLET PROTECTION
- Temp DRAINAGE OUTLET PROTECTION
- Temp CHECK DAM
- Temp CONSTRUCTION ENTRANCE
- Temp STOCKPILE (SP)

ENVIRONMENTALLY SENSITIVE AREA (ESA)

ESA

DRAINAGE

- DIRECTION FLOW OF WATER
- DRAINAGE SYSTEM SYMBOL
- DRAINAGE UNIT SYMBOL
- DRAINAGE INLET
- DITCH FLOW LINE

DRAFTING

- TILDE - DESIGNATES AN AREA
- NORTH ARROW
- ADDENDUM SHEET SYMBOL *(ADDENDUM NUMBER IS INCLUDED INSIDE THE SYMBOL)*
- MATCH LINE
- BREAK LINE

BOUNDARY LINE

- STATE OR COUNTRY
- COUNTY OR RESERVATION BOUNDARY
- CITY OR MILITARY BOUNDARY
- FOREST
- SUBDIVISION, SECTION, GRANT
- RANCHO

2015 REVISED STANDARD PLAN RSP A10B

STATE OF CALIFORNIA
DEPARTMENT OF TRANSPORTATION

LEGEND
LINES AND SYMBOLS
(SHEET 2 OF 5)

NO SCALE

RSP A10B DATED JULY 21, 2017 SUPERSEDES RSP A10B DATED JANUARY 20, 2017 AND STANDARD PLAN A10B DATED OCTOBER 30, 2015 - PAGE 5 OF THE STANDARD PLANS BOOK DATED 2015.

REVISED STANDARD PLAN RSP A10B

6-13-17

© 2018 California Department of Transportation
All Rights Reserved

Dist	COUNTY	ROUTE	POST MILES TOTAL PROJECT	SHEET No.	TOTAL SHEETS
04	SCL	101,237	45.2/45.8 2.7/3.3	563	736

Atifa Ferouz
REGISTERED CIVIL ENGINEER

April 20, 2018
PLANS APPROVAL DATE

REGISTERED PROFESSIONAL ENGINEER — Atifa Ferouz — No. C80402 — Exp. 3-31-19 CIVIL — STATE OF CALIFORNIA

THE STATE OF CALIFORNIA OR ITS OFFICERS OR AGENTS SHALL NOT BE RESPONSIBLE FOR THE ACCURACY OR COMPLETENESS OF SCANNED COPIES OF THIS PLAN SHEET.

TO ACCOMPANY PLANS DATED _____

CENTERLINES
(2 LANE HIGHWAYS)

DETAIL 1

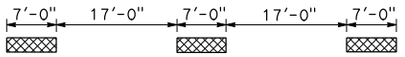

DETAIL 2

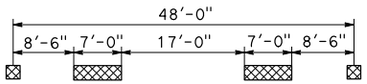

~~DETAIL 3~~ DETAIL 3 DELETED

~~DETAIL 4~~ DETAIL 4 DELETED

LANELINES (Cont)
(MULTILANE HIGHWAYS)

DETAIL 12

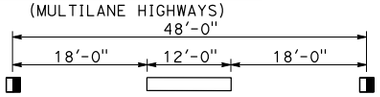

DETAIL 12A
SEE NOTE

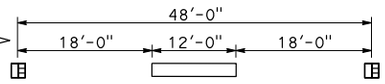

~~DETAIL 13~~ DETAIL 13 DELETED

~~DETAIL 14~~ DETAIL 14 DELETED

~~DETAIL 14A~~ DETAIL 14A DELETED

NO PASSING ZONES-TWO DIRECTION

DETAIL 21

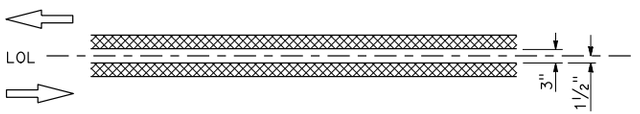

DETAIL 22

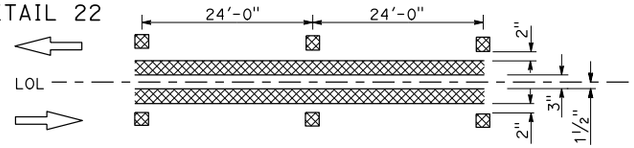

~~DETAIL 23~~ DETAIL 23 DELETED

LEGEND

MARKERS

- TYPE C RED-CLEAR RETROREFLECTIVE
- TYPE D TWO-WAY YELLOW RETROREFLECTIVE
- TYPE G ONE-WAY CLEAR RETROREFLECTIVE
- TYPE H ONE-WAY YELLOW RETROREFLECTIVE

LINES

- 6" WHITE
- 6" YELLOW

NO PASSING ZONES-ONE DIRECTION

DETAIL 5

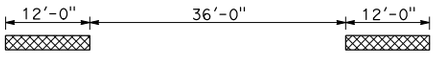

DETAIL 6

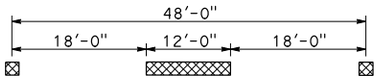

~~DETAIL 7~~ DETAIL 7 DELETED

DETAIL 15

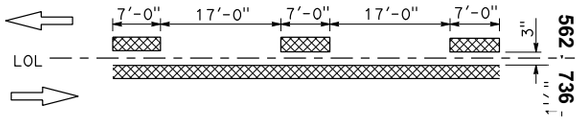

DETAIL 16

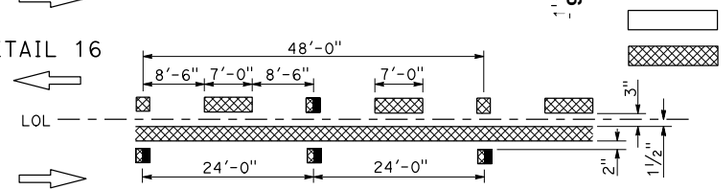

~~DETAIL 17~~ DETAIL 17 DELETED

LANELINES
(MULTILANE HIGHWAYS)

DETAIL 8

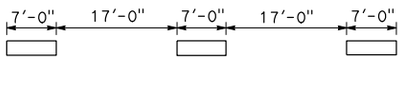

DETAIL 9

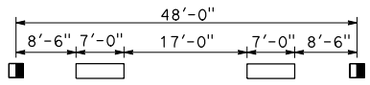

DETAIL 9A
SEE NOTE

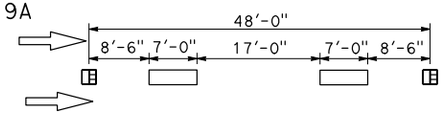

~~DETAIL 10~~ DETAIL 10 DELETED

DETAIL 11

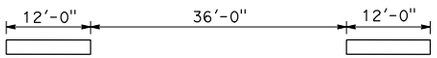

DETAIL 18

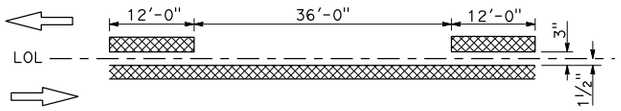

DETAIL 19

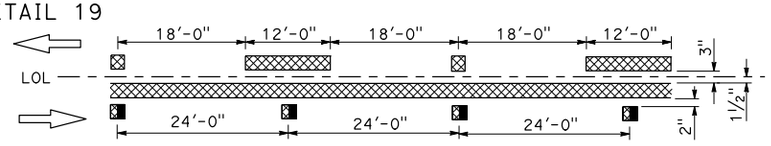

~~DETAIL 20~~ DETAIL 20 DELETED

NOTE:
FOR FREEWAY APPLICATION ONLY

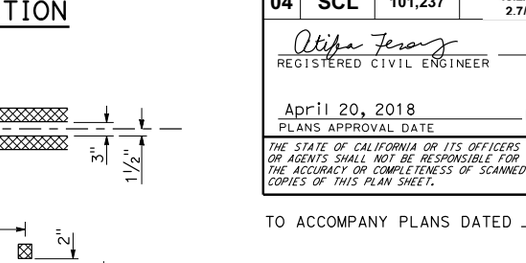

TYPE C AND TYPE D — TYPE G AND TYPE H

RETROREFLECTIVE FACE

STATE OF CALIFORNIA
DEPARTMENT OF TRANSPORTATION

PAVEMENT MARKERS AND TRAFFIC LINES TYPICAL DETAILS

NO SCALE

RSP A20A DATED APRIL 20, 2018 SUPERSEDES RSP A20A DATED JULY 21, 2017 AND STANDARD PLAN A20A DATED OCTOBER 30, 2015 - PAGE 12 OF THE STANDARD PLANS BOOK DATED 2015.

REVISED STANDARD PLAN RSP A20A

2015 REVISED STANDARD PLAN RSP A20A

04 SCL 101,237 45.2/45.8 2.7/3.3 562 736

11-14-17

© 2018 California Department of Transportation
All Rights Reserved

Dist	COUNTY	ROUTE	POST MILES TOTAL PROJECT	SHEET No.	TOTAL SHEETS
04	SCL	101,237	45.2/45.8 2.7/3.3	564	736

Atifa Ferouz
REGISTERED CIVIL ENGINEER

April 20, 2018
PLANS APPROVAL DATE

REGISTERED PROFESSIONAL ENGINEER — Atifa Ferouz — No. C80402 — Exp. 3-31-19 CIVIL — STATE OF CALIFORNIA

THE STATE OF CALIFORNIA OR ITS OFFICERS OR AGENTS SHALL NOT BE RESPONSIBLE FOR THE ACCURACY OR COMPLETENESS OF SCANNED COPIES OF THIS PLAN SHEET.

TO ACCOMPANY PLANS DATED _____

LEFT EDGELINES

(DIVIDED HIGHWAYS)

DETAIL 24

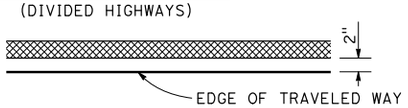

DETAIL 25

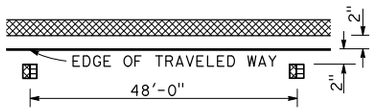

DETAIL 25A

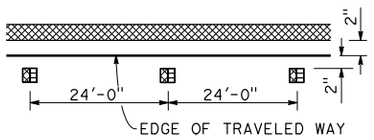

DETAIL 26

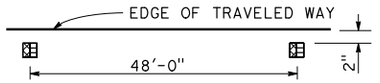

DETAIL 27

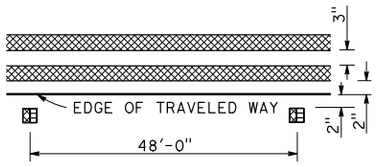

MEDIAN ISLANDS

DETAIL 28

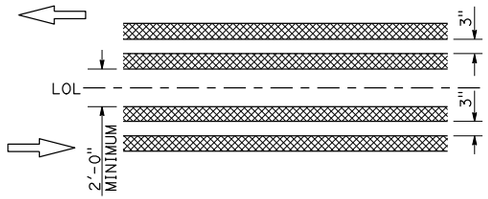

DETAIL 29

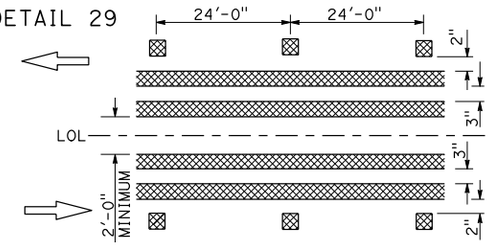

~~DETAIL 30~~ DETAIL 30 DELETED

LEGEND

MARKERS

- TYPE D — TWO-WAY YELLOW RETROREFLECTIVE
- TYPE H — ONE-WAY YELLOW RETROREFLECTIVE
- TYPE RY — RED-YELLOW RETROREFLECTIVE

LINES

- 6" WHITE
- 6" YELLOW

INTERSECTION TREATMENTS

DETAIL 34

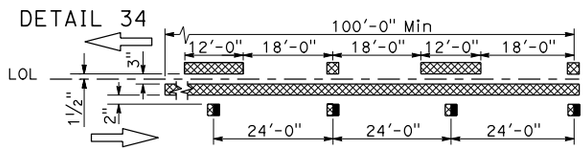

DETAIL 34A

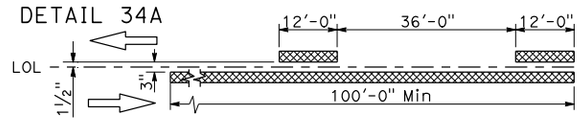

DETAIL 35

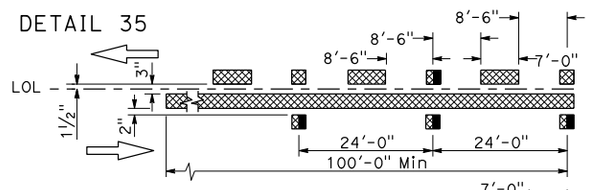

DETAIL 35A

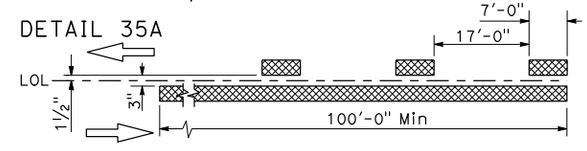

CENTERLINE INTERSECTING STREET

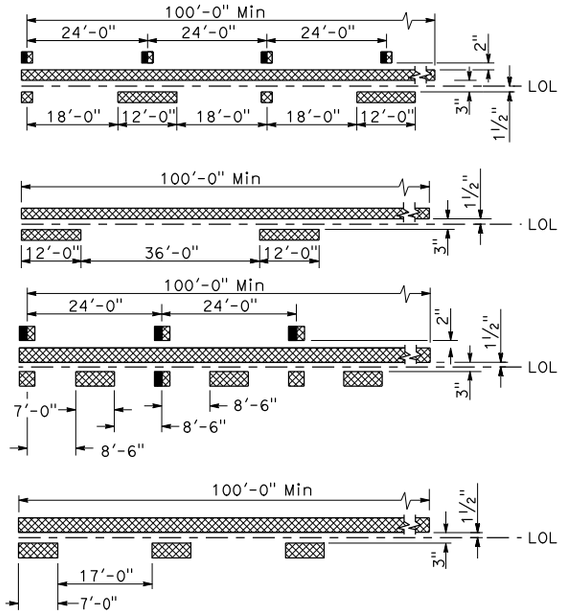

RIGHT EDGELINES

~~DETAIL 27A~~ DETAIL 27A DELETED

DETAIL 27B

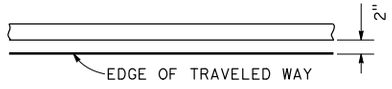

RIGHT EDGELINE EXTENSION THROUGH INTERSECTIONS

DETAIL 27C

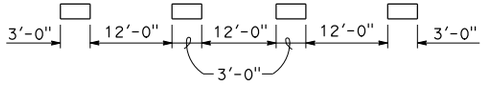

TWO-WAY LEFT TURN LANES

DETAIL 31

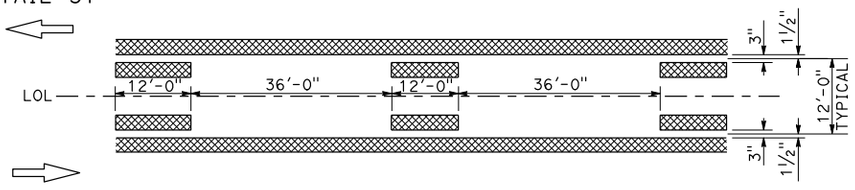

DETAIL 32

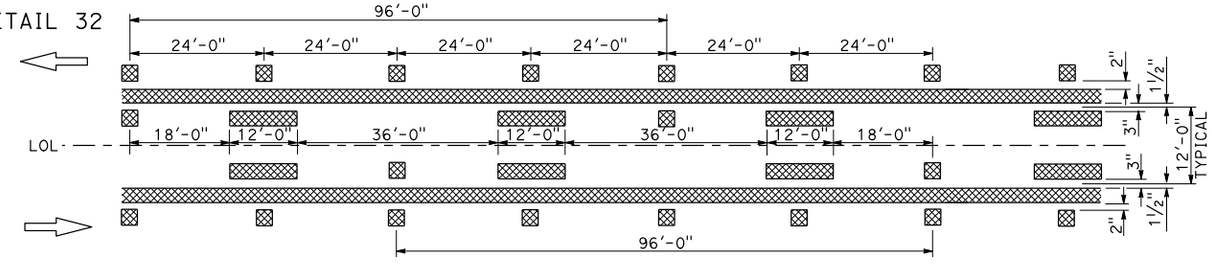

~~DETAIL 33~~ DETAIL 33 DELETED

MARKER DETAILS

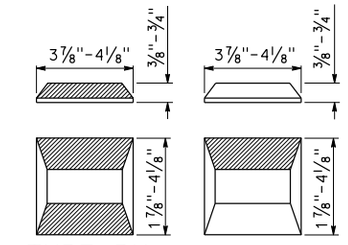

TYPE RY AND TYPE D

TYPE H

RETROREFLECTIVE FACE

STATE OF CALIFORNIA
DEPARTMENT OF TRANSPORTATION

PAVEMENT MARKERS AND TRAFFIC LINES TYPICAL DETAILS

NO SCALE

RSP A20B DATED APRIL 20, 2018 SUPERSEDES RSP A20B DATED JULY 21, 2017 AND STANDARD PLAN A20B DATED OCTOBER 30, 2015 - PAGE 13 OF THE STANDARD PLANS BOOK DATED 2015.

REVISED STANDARD PLAN RSP A20B

2015 REVISED STANDARD PLAN RSP A20B

11-14-17

© 2018 California Department of Transportation
All Rights Reserved

Dist	COUNTY	ROUTE	POST MILES TOTAL PROJECT	SHEET No.	TOTAL SHEETS
04	SCL	101.237	45.2/45.8 2.7/3.3	565	736

Atifa Ferouz
REGISTERED CIVIL ENGINEER

April 20, 2018
PLANS APPROVAL DATE

REGISTERED PROFESSIONAL ENGINEER — Atifa Ferouz — No. C80402 — Exp. 3-31-19 — CIVIL — STATE OF CALIFORNIA

THE STATE OF CALIFORNIA OR ITS OFFICERS OR AGENTS SHALL NOT BE RESPONSIBLE FOR THE ACCURACY OR COMPLETENESS OF SCANNED COPIES OF THIS PLAN SHEET.

TO ACCOMPANY PLANS DATED _____

EXIT RAMP NEUTRAL AREA (GORE) TREATMENT

DETAIL 36

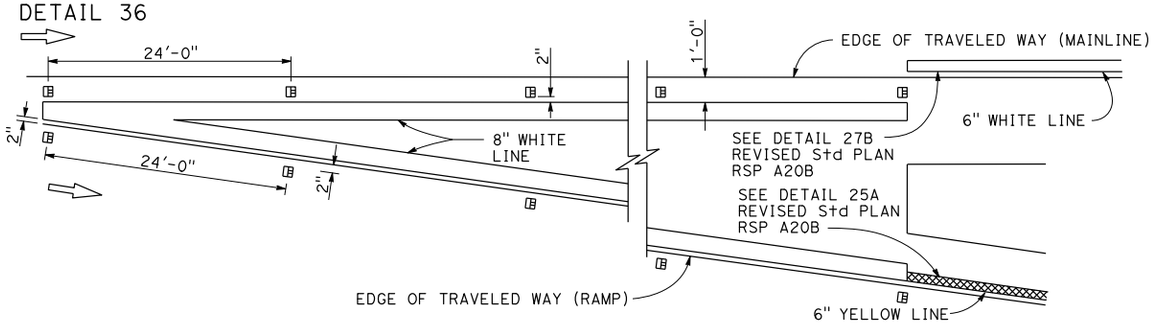

ENTRANCE RAMP NEUTRAL AREA (MERGE) TREATMENT

DETAIL 36A

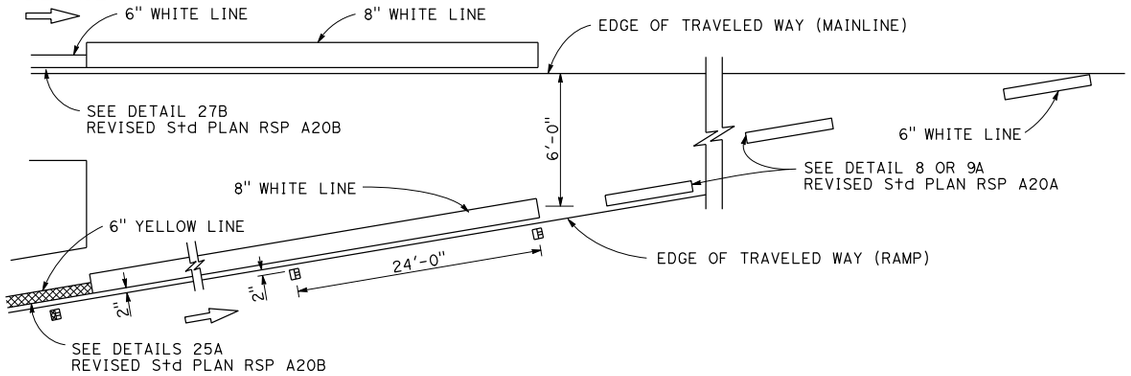

ENTRANCE RAMP NEUTRAL AREA (ACCELERATION LANE) TREATMENT

DETAIL 36B

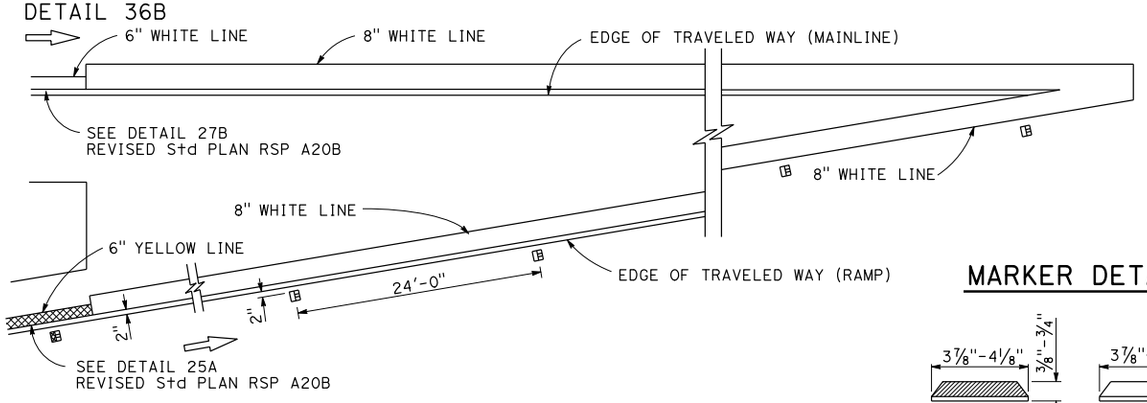

LANE DROP AT EXIT RAMPS

DETAIL 37

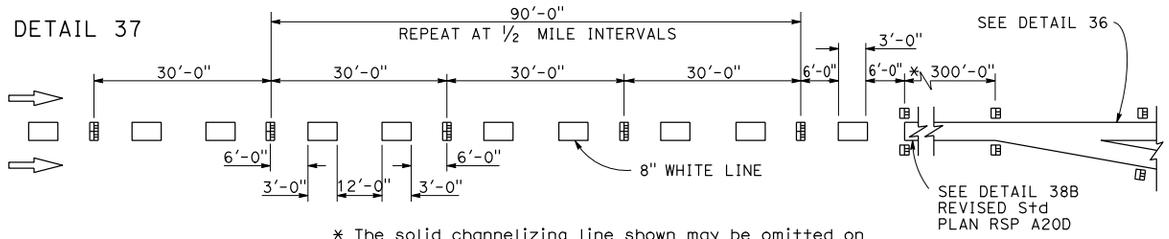

* The solid channelizing line shown may be omitted on short auxiliary lanes where weaving length is critical.

~~DETAIL 37A~~ DETAIL 37A DELETED

LANE DROP AT INTERSECTIONS

DETAIL 37B

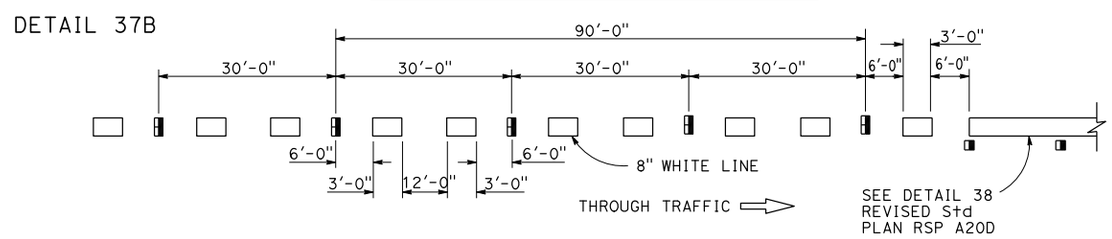

~~DETAIL 37C~~ DETAIL 37C DELETED

MARKER DETAILS

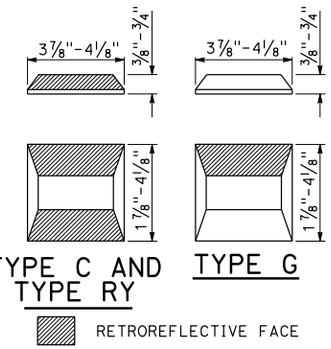

LEGEND:

MARKERS

- TYPE C RED-CLEAR RETROREFLECTIVE
- TYPE G ONE-WAY CLEAR RETROREFLECTIVE
- TYPE RY RED-YELLOW RETROREFLECTIVE

STATE OF CALIFORNIA
DEPARTMENT OF TRANSPORTATION

PAVEMENT MARKERS AND TRAFFIC LINES TYPICAL DETAILS

NO SCALE

RSP A20C DATED APRIL 20, 2018 SUPERSEDES RSP A20C DATED JULY 21, 2017 AND STANDARD PLAN A20C DATED OCTOBER 30, 2015 - PAGE 14 OF THE STANDARD PLANS BOOK DATED 2015.

REVISED STANDARD PLAN RSP A20C

2015 REVISED STANDARD PLAN RSP A20C

11-14-17

© 2018 California Department of Transportation
All Rights Reserved

Dist	COUNTY	ROUTE	POST MILES TOTAL PROJECT	SHEET No.	TOTAL SHEETS
04	SCL	101.237	45.2/45.8 2.7/3.3	566	736

Atifa Ferouz
REGISTERED CIVIL ENGINEER

April 20, 2018
PLANS APPROVAL DATE

REGISTERED PROFESSIONAL ENGINEER — Atifa Ferouz — No. C80402 — Exp. 3-31-19 CIVIL — STATE OF CALIFORNIA

THE STATE OF CALIFORNIA OR ITS OFFICERS OR AGENTS SHALL NOT BE RESPONSIBLE FOR THE ACCURACY OR COMPLETENESS OF SCANNED COPIES OF THIS PLAN SHEET.

TO ACCOMPANY PLANS DATED _____

CHANNELIZING LINE

DETAIL 38

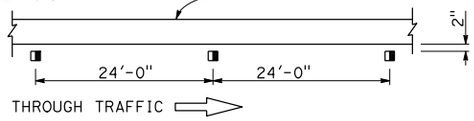

DETAIL 38A

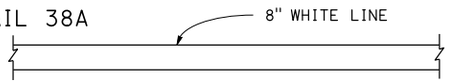

DETAIL 38B

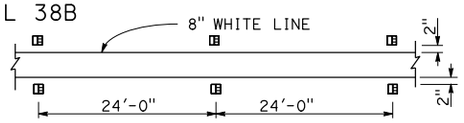

~~DETAIL 38C~~ DETAIL 38C DELETED

BIKE LANE LINE

DETAIL 39

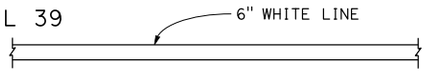

INTERSECTION LINE
BIKE LANE

DETAIL 39A

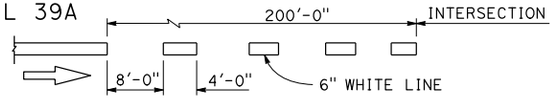

LANE LINE EXTENSIONS THROUGH INTERSECTIONS

DETAIL 40

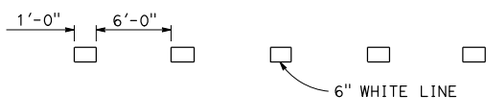

~~DETAIL 40A~~ DETAIL 40A DELETED

CENTER LINE EXTENSIONS THROUGH INTERSECTIONS

DETAIL 41

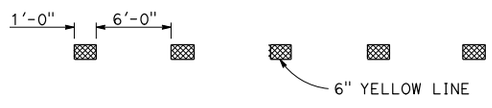

~~DETAIL 41A~~ DETAIL 41A DELETED

LEGEND

MARKERS

TYPE C RED-CLEAR RETROREFLECTIVE

TYPE G ONE-WAY CLEAR RETROREFLECTIVE

6" YELLOW LINE

MARKER DETAILS

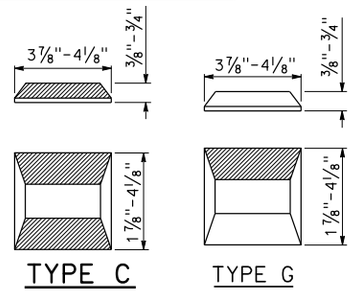

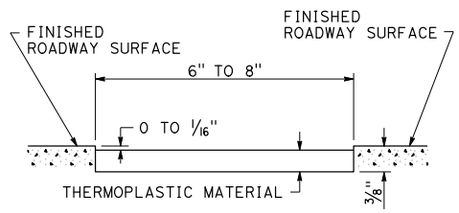

DETAIL FOR RECESSED THERMOPLASTIC TRAFFIC STRIPE

See Notes A and B.

RECESSED THERMOPLASTIC NOTES

A. See typical traffic line details for pavement marking patterns.

B. The top of the thermoplastic installed in recessed pavement shall be 0 to 1/16" below the pavement surface.

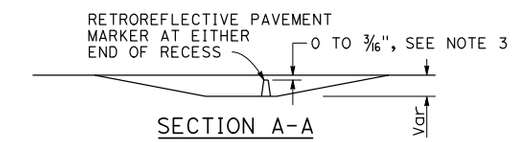

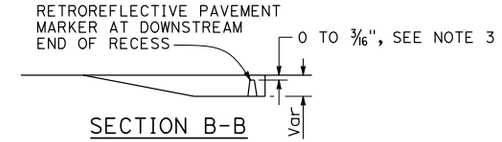

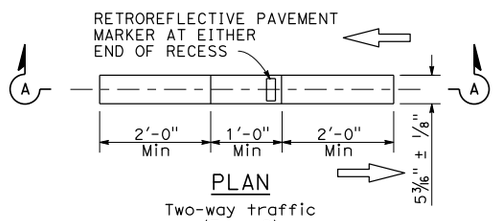

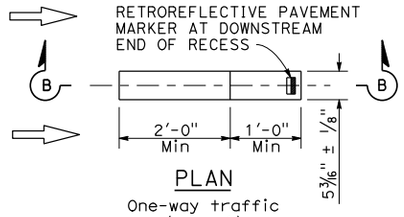

RECESS DETAIL FOR RETROREFLECTIVE PAVEMENT MARKER

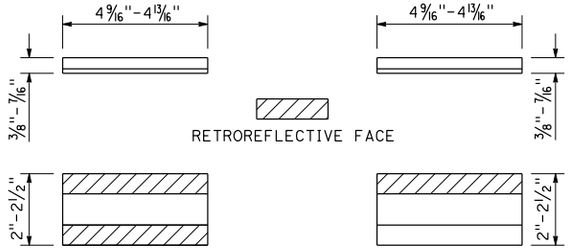

See Notes 1 and 2.

RECESSED MARKER NOTES:

1. See typical traffic line details for marker patterns to be used with recessed pavement markers. Detail 14A requires a Type 2 recess.
2. The retroreflective pavement markers shown for recessed installations are not to be used for non-recessed installations.
3. The top of pavement markers installed in recesses shall be 0 to 3/16" below the pavement surface.

RETROREFLECTIVE PAVEMENT MARKER FOR RECESSED INSTALLATION

STATE OF CALIFORNIA
DEPARTMENT OF TRANSPORTATION

PAVEMENT MARKERS AND TRAFFIC LINES TYPICAL DETAILS

NO SCALE

RSP A20D DATED APRIL 20, 2018 SUPERSEDES RSP A20D DATED JULY 21, 2017 AND STANDARD PLAN A20D DATED OCTOBER 30, 2015 - PAGE 15 OF THE STANDARD PLANS BOOK DATED 2015.

REVISED STANDARD PLAN RSP A20D

2015 REVISED STANDARD PLAN RSP A20D

11-14-17

© 2017 California Department of Transportation
All Rights Reserved

Dist	COUNTY	ROUTE	POST MILES TOTAL PROJECT	SHEET No.	TOTAL SHEETS
04	SCL	101,237	45.2/45.8 2.7/3.3	567	736

Atifa Ferouz
REGISTERED CIVIL ENGINEER

July 21, 2017
PLANS APPROVAL DATE

REGISTERED PROFESSIONAL ENGINEER
Atifa Ferouz
No. C80402
Exp. 3-31-19
CIVIL
STATE OF CALIFORNIA

THE STATE OF CALIFORNIA OR ITS OFFICERS OR AGENTS SHALL NOT BE RESPONSIBLE FOR THE ACCURACY OR COMPLETENESS OF SCANNED COPIES OF THIS PLAN SHEET.

TO ACCOMPANY PLANS DATED _____

NOTES:

1. See Revised Standard Plans RSP A20A, RSP A20B, RSP A20C, and RSP A20D for pavement markers and traffic lines typical details.
2. Detail 9 traffic stripe shown, see project plans for traffic stripe details.

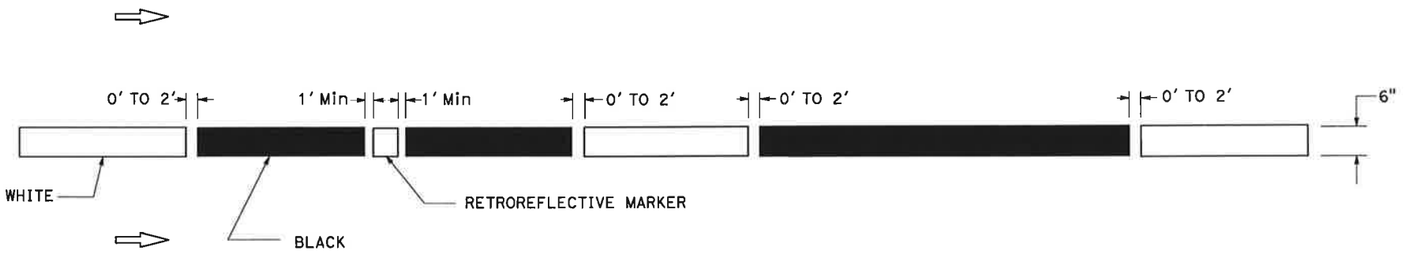

OPTION 2
TYPICAL LANE LINE CONTRAST DETAIL
See Note 2

OPTION 1
TYPICAL LANE LINE OR RIGHT EDGE LINE CONTRAST DETAIL

STATE OF CALIFORNIA
DEPARTMENT OF TRANSPORTATION

PAVEMENT MARKERS
AND TRAFFIC LINES
TYPICAL DETAILS FOR CONTRAST STRIPING

NO SCALE

RSP A20E DATED JULY 21, 2017 SUPERSEDES RSP A20E DATED JANUARY 20, 2017 THAT SUPPLEMENTS THE STANDARD PLANS BOOK DATED 2015.

REVISED STANDARD PLAN RSP A20E

2015 REVISED STANDARD PLAN RSP A20E

4-4-17

© 2018 California Department of Transportation
All Rights Reserved

Dist	COUNTY	ROUTE	POST MILES TOTAL PROJECT	SHEET No.	TOTAL SHEETS
04	SCL	101.237	45.2/45.8 2.7/3.3	568	736

Randell D. Hiatt
REGISTERED CIVIL ENGINEER

April 20, 2018
PLANS APPROVAL DATE

REGISTERED PROFESSIONAL ENGINEER — Randell D. Hiatt — No. C50200 — Exp. 6-30-19 — CIVIL — STATE OF CALIFORNIA

THE STATE OF CALIFORNIA OR ITS OFFICERS OR AGENTS SHALL NOT BE RESPONSIBLE FOR THE ACCURACY OR COMPLETENESS OF SCANNED COPIES OF THIS PLAN SHEET.

TO ACCOMPANY PLANS DATED _____

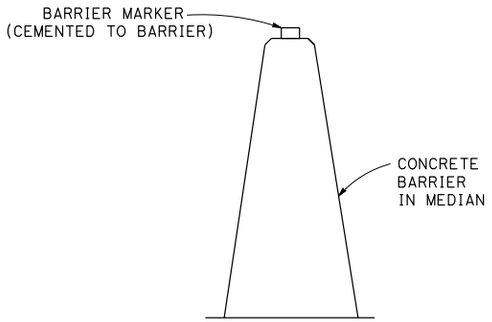

CONCRETE BARRIER TYPE 60M DELINEATION

See Note 5

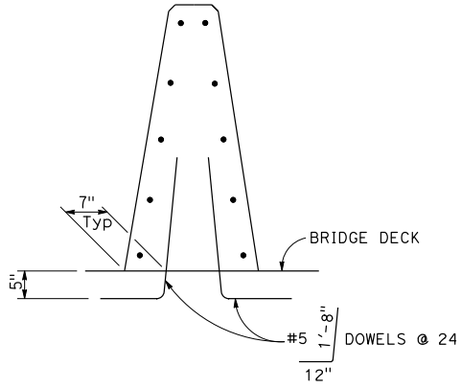

CONCRETE BARRIER TYPE 60MA

Details similar to Type 60M except as noted.

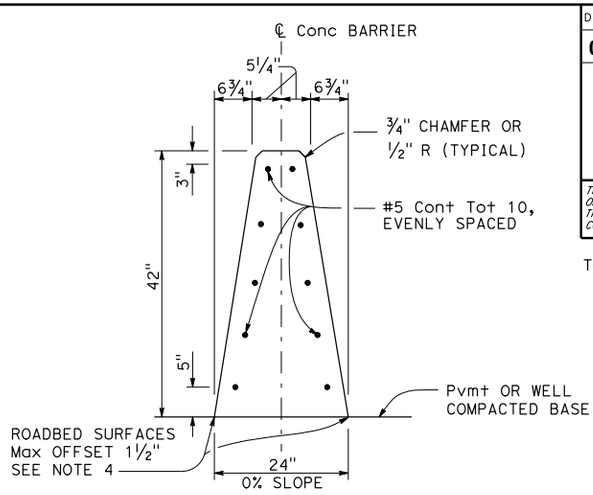

CONCRETE BARRIER TYPE 60M

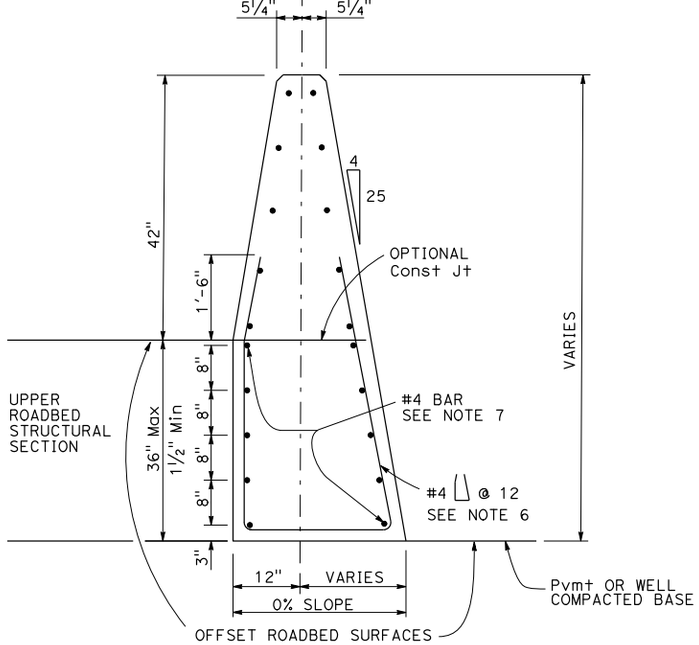

CONCRETE BARRIER TYPE 60MC

Details similar to Type 60M except as noted.
Use concrete barrier end anchor when necessary.
36" roadbed surfaces offset shown.

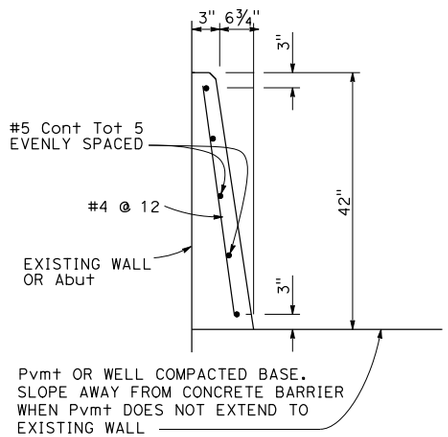

CONCRETE BARRIER TYPE 60MD

NOTES:

1. See Revised Standard Plan RSP A76B for details of Concrete Barrier Type 60M end anchors, connection to structures and transitions to Concrete Barrier Type 50 and Concrete Barrier Type 60MS.
2. See Revised Standard Plan RSP A76C for Concrete Barrier Type 60M transitions at bridge column and sign pedestals.
3. Where glare screen is required on Concrete Barrier Type 60M, use Concrete Barrier Type 60MG.
4. Where roadbed offset is greater than 1½", see Concrete Barrier Type 60MC.
5. See Project Plans for barrier delineation locations.
6. Reinforcing stirrup not required for roadbed offsets less than 1'-0".
7. For roadbed surfaces offset greater than 1½" and less than or equal to 3", no reinforcement required. For roadbed surfaces offset greater than 3" and less than or equal to 8", use two #4 Reinf at 3" above the lower roadbed surface. For roadbed surfaces offset greater than 8" and less than or equal to 12", use two #4 Reinf at 3" above the lower roadbed surface and two #4 Reinf at 8" above the lower roadbed surface. For roadbed surfaces offset greater than 12" and less than or equal to 36", use two #4 Reinf at 3" above the lower roadbed surface and two #4 Reinf at every 8" increment vertical spacing above the first two #4 Reinf.

STATE OF CALIFORNIA
DEPARTMENT OF TRANSPORTATION

CONCRETE BARRIER TYPE 60M

NO SCALE

RSP A76A DATED APRIL 20, 2018 SUPERSEDES STANDARD PLAN A76A
DATED OCTOBER 30, 2015 - PAGE 37 OF THE STANDARD PLANS BOOK DATED 2015.

REVISED STANDARD PLAN RSP A76A

2015 REVISED STANDARD PLAN RSP A76A

12-5-17

© 2018 California Department of Transportation
All Rights Reserved

Dist	COUNTY	ROUTE	POST MILES TOTAL PROJECT	SHEET No.	TOTAL SHEETS
04	SCL	101.237	45.2/45.8 2.7/3.3	569	736

Randell D. Hiatt
REGISTERED CIVIL ENGINEER

April 20, 2018
PLANS APPROVAL DATE

Randell D. Hiatt No. C50200 Exp. 6-30-19 CIVIL — REGISTERED PROFESSIONAL ENGINEER — STATE OF CALIFORNIA

THE STATE OF CALIFORNIA OR ITS OFFICERS OR AGENTS SHALL NOT BE RESPONSIBLE FOR THE ACCURACY OR COMPLETENESS OF SCANNED COPIES OF THIS PLAN SHEET.

TO ACCOMPANY PLANS DATED _____

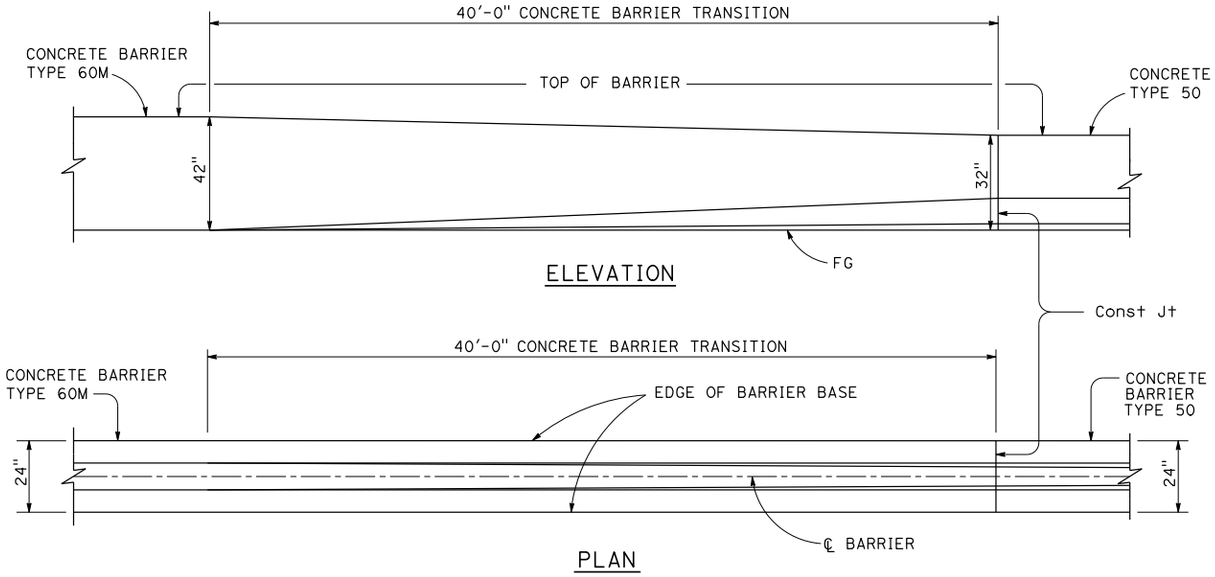

TRANSITION CONCRETE BARRIER TYPE 60M TO CONCRETE BARRIER TYPE 50

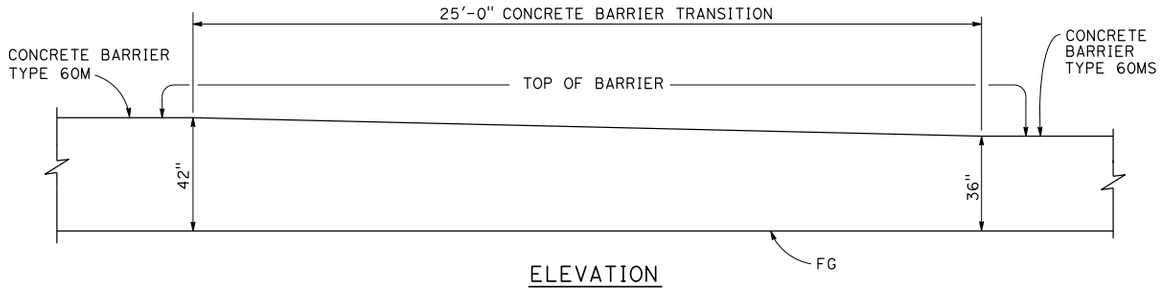

TRANSITION CONCRETE BARRIER TYPE 60M TO CONCRETE BARRIER TYPE 60MS

NOTES:

1. See Revised Standard Plan RSP A76A for Concrete Barrier Type 60M and Type 60MA.
2. Footing monolithic or doweled with 2-#8 x 8" @ 2'-0". The footing is required at concrete barrier ends and at interruptions in concrete barrier.
3. 10" concrete barrier footing extends 10' back from structure.
4. See Revised Standard Plan RSP A78I for transition to Thrie Beam Barrier.

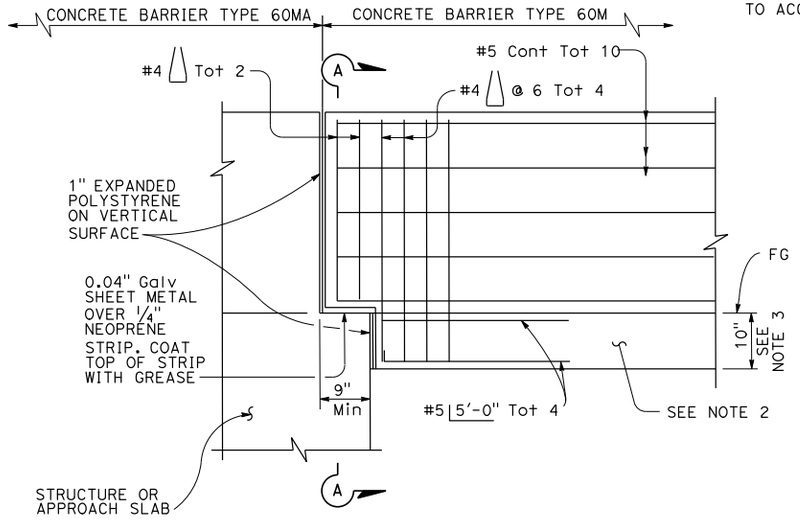

CONCRETE BARRIER TYPE 60M CONNECTION TO STRUCTURE

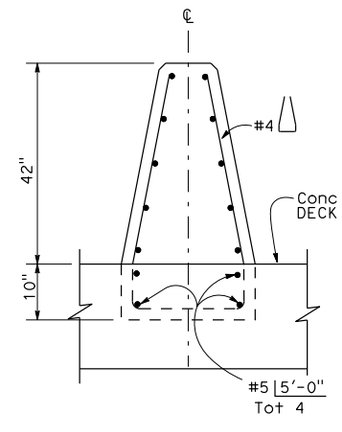

SECTION A-A

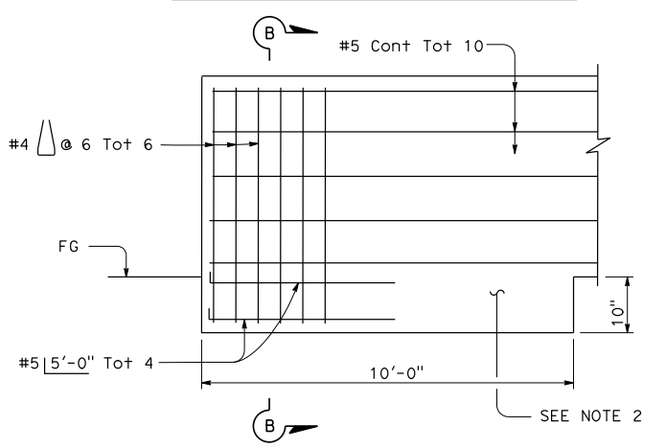

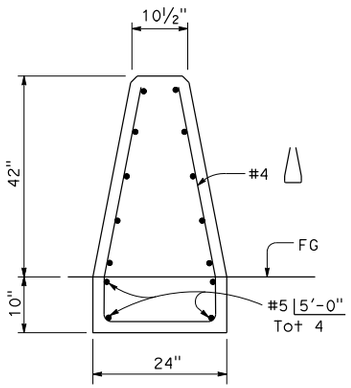

SECTION B-B

CONCRETE BARRIER TYPE 60M END ANCHORAGE

STATE OF CALIFORNIA
DEPARTMENT OF TRANSPORTATION

CONCRETE BARRIER TYPE 60M

NO SCALE

RSP A76B DATED APRIL 20, 2018 SUPERSEDES STANDARD PLAN A76B
DATED OCTOBER 30, 2015 - PAGE 38 OF THE STANDARD PLANS BOOK DATED 2015.

REVISED STANDARD PLAN RSP A76B

2015 REVISED STANDARD PLAN RSP A76B

11-7-17

© 2017 California Department of Transportation
All Rights Reserved

Dist	COUNTY	ROUTE	POST MILES TOTAL PROJECT	SHEET No.	TOTAL SHEETS
04	SCL	101,237	45.2/45.8 2.7/3.3	570	736

Randell D. Hiatt
REGISTERED CIVIL ENGINEER

January 20, 2017
PLANS APPROVAL DATE

THE STATE OF CALIFORNIA OR ITS OFFICERS OR AGENTS SHALL NOT BE RESPONSIBLE FOR THE ACCURACY OR COMPLETENESS OF SCANNED COPIES OF THIS PLAN SHEET.

REGISTERED PROFESSIONAL ENGINEER — Randell D. Hiatt — No. C50200 — Exp. 6-30-17 — CIVIL — STATE OF CALIFORNIA

TO ACCOMPANY PLANS DATED _____

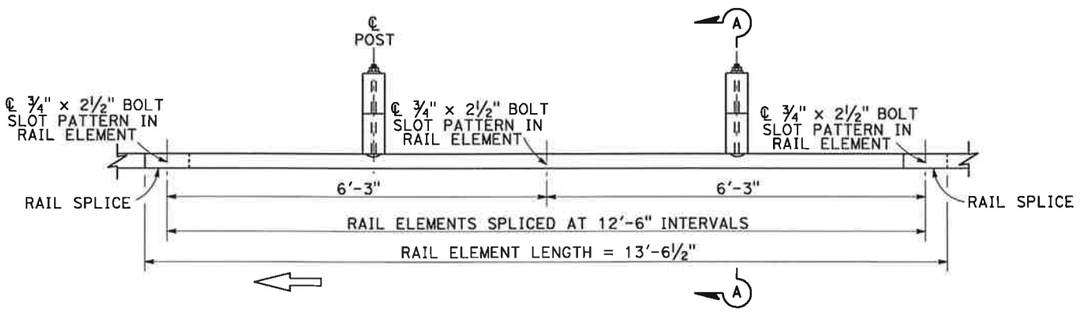

PLAN

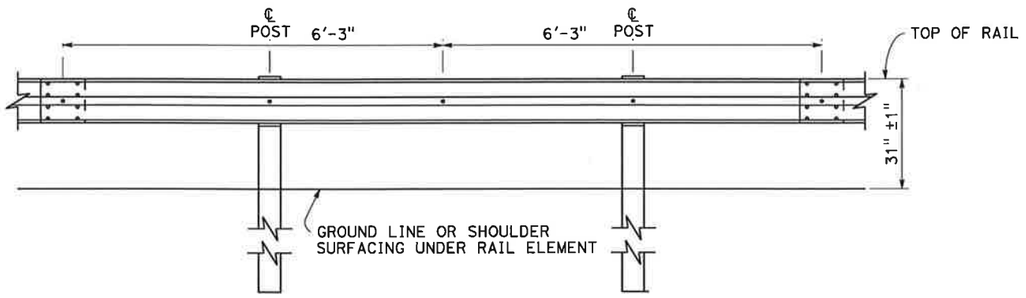

ELEVATION

MIDWEST GUARDRAIL SYSTEM WITH WOOD POST AND BLOCKS

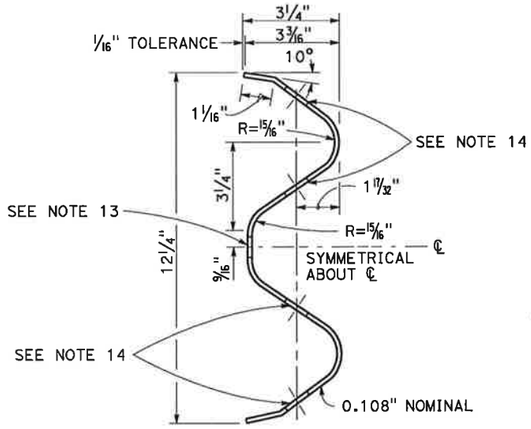

SECTION THRU RAIL ELEMENT

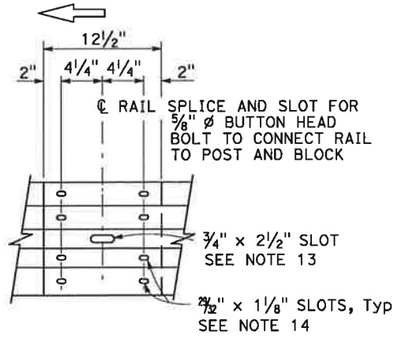

ELEVATION

RAIL ELEMENT SPLICE DETAIL

a) Connect the overlapped end of the rail elements with ⅝" ø x 1⅜" button head oval shoulder splice bolts inserted into the 29/32" x 1⅛" slots and bolted together with ⅝" ø recessed hex nuts. Recess of hex nut points toward rail element. A total of 8 bolts and nuts are to be used at each rail splice connection.

b) The ends of the rail elements are to be overlapped in the direction of traffic (see details).

c) Where end cap is to be attached to the end of a rail element, a total of 4 of the above described splice bolts and nuts are to be used.

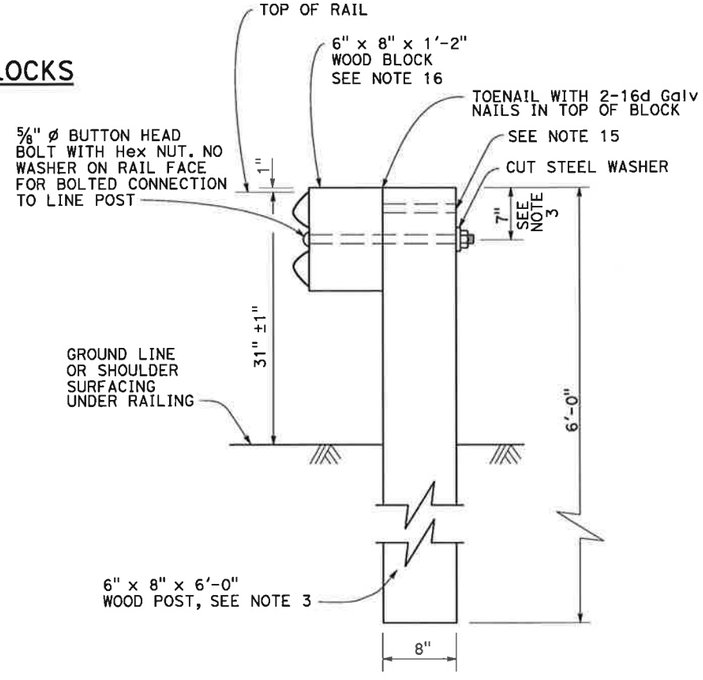

SECTION A-A

TYPICAL WOOD LINE POST INSTALLATION

See Note 4

NOTES:

1. For details of steel post installations, see Revised Standard Plan RSP A77L2.
2. For details of standard hardware used to construct MGS, see Standard Plan A77M1.
3. For details of wood posts and wood blocks used to construct MGS, see Revised Standard Plan RSP A77N1.
4. For additional installation details, see Standard Plan A77N3.
5. MGS post spacing to be 6'-3" center to center, except as otherwise noted.
6. For MGS typical layouts, see the A77P, A77Q and A77R Series of Standard Plans.
7. If railing is connected to terminal system end treatment, use 31" height terminal system end treatment.
8. For MGS end anchor details, see Standard Plans A77S1 and A77T2.
9. For details of MGS transition to bridge railing, see Standard Plan A77U4.
10. For additional details of MSG connection to bridge railing, see Standard Plans A77U1, A77U2 and A77V1.
11. For MGS connection details to abutments and walls, see Standard Plan A77U3.
12. For typical MGS delineation and dike positioning details, see Standard Plan A77N4.
13. Slotted hole for bolted connection of rail element to block and post.
14. Slotted holes for splice bolts to overlap ends of rail element.
15. Additional hole in uppermost portion of line post is for potential future adjustments of railing height. See Revised Standard Plan RSP A77N1.
16. 6" x 12" x 1'-2" block must be used with 6" dike.

STATE OF CALIFORNIA
DEPARTMENT OF TRANSPORTATION

MIDWEST GUARDRAIL SYSTEM STANDARD RAILING SECTION (WOOD POST WITH WOOD BLOCK)

NO SCALE

RSP A77L1 DATED JANUARY 20, 2017 SUPERSEDES STANDARD PLAN A77L1 DATED OCTOBER 30, 2015 - PAGE 49 OF THE STANDARD PLANS BOOK DATED 2015.

REVISED STANDARD PLAN RSP A77L1

2015 REVISED STANDARD PLAN RSP A77L1

1-10-17

© 2017 California Department of Transportation
All Rights Reserved

Dist	COUNTY	ROUTE	POST MILES TOTAL PROJECT	SHEET No.	TOTAL SHEETS
04	SCL	101,237	45.2/45.8 2.7/3.3	571	736

Randell D. Hiatt
REGISTERED CIVIL ENGINEER

January 20, 2017
PLANS APPROVAL DATE

REGISTERED PROFESSIONAL ENGINEER — Randell D. Hiatt — No. C50200 — Exp. 6-30-17 — CIVIL — STATE OF CALIFORNIA

THE STATE OF CALIFORNIA OR ITS OFFICERS OR AGENTS SHALL NOT BE RESPONSIBLE FOR THE ACCURACY OR COMPLETENESS OF SCANNED COPIES OF THIS PLAN SHEET.

TO ACCOMPANY PLANS DATED _____

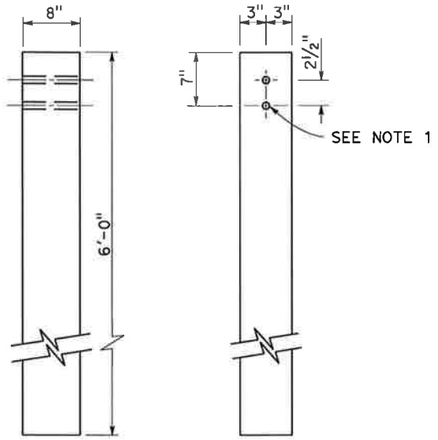

SIDE FRONT

6" x 8" WOOD POST
See Note 3

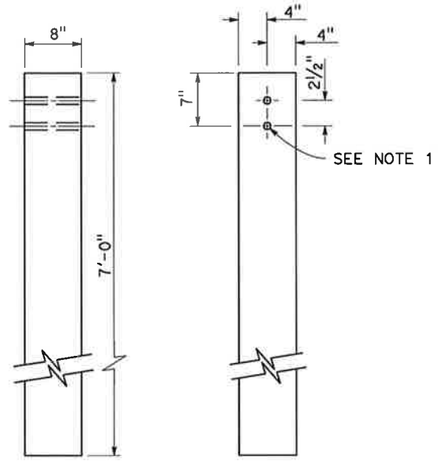

SIDE FRONT

8" x 8" WOOD POST
See Note 4

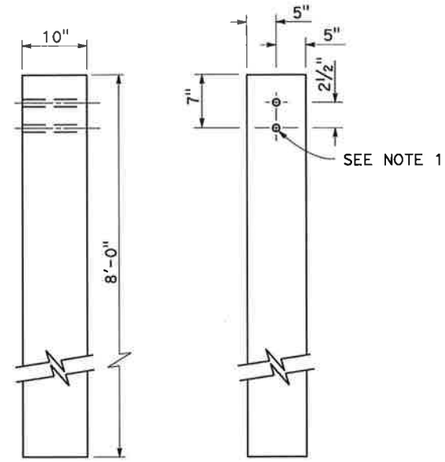

SIDE FRONT

10" x 10" WOOD POST
See Note 5

NOTES:

1. All holes in wood posts and blocks shall be ¾" Dia ± 1/16".
2. Dimensions shown for wood post are nominal.
3. This post and block combination used for standard line post sections of MGS.
4. This post and 8" x 12" block combination used for line post sections of MGS on narrow roadways.
5. This post and 8" x 12" block combination is typically used where strengthened line post sections of MGS are warranted to shield fixed objects.
6. See Revised Standard Plan RSP A77L3 for use of 6" x 8" and 8" x 8" wood blocks.
7. To be used with 8" x 8" x 7'-0" wood post if installed with 6" height dike.
8. To be used with 6" x 8" x 6'-0" wood post if installed with 6" height dike.

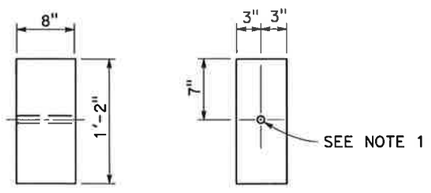

SIDE FRONT

6" x 8" WOOD BLOCK
See Note 6 and Note 3

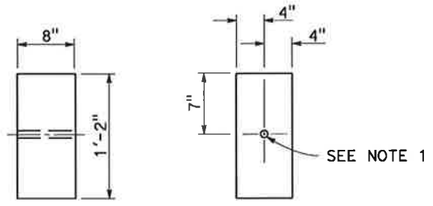

SIDE FRONT

8" x 8" WOOD BLOCK
See Note 6 and Note 4

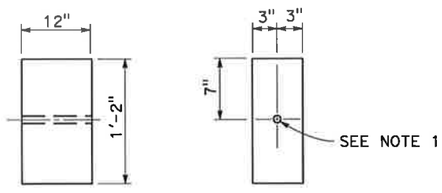

SIDE FRONT

6" x 12" WOOD BLOCK
See Note 8

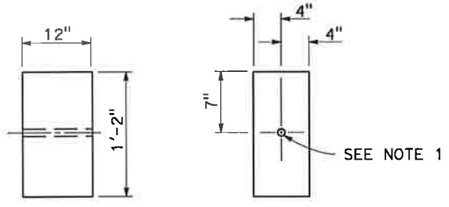

SIDE FRONT

8" x 12" WOOD BLOCK
See Note 7

STATE OF CALIFORNIA
DEPARTMENT OF TRANSPORTATION

MIDWEST GUARDRAIL SYSTEM WOOD POST AND WOOD BLOCK DETAILS

NO SCALE

RSP A77N1 DATED JANUARY 20, 2017 SUPERSEDES STANDARD PLAN A77N1
DATED OCTOBER 30, 2015 - PAGE 53 OF THE STANDARD PLANS BOOK DATED 2015.

REVISED STANDARD PLAN RSP A77N1

2015 REVISED STANDARD PLAN RSP A77N1

7-21-16

© 2017 California Department of Transportation
All Rights Reserved

Dist	COUNTY	ROUTE	POST MILES TOTAL PROJECT	SHEET No.	TOTAL SHEETS
04	SCL	101,237	45.2/45.8 2.7/3.3	572	736

Randell D. Hiatt
REGISTERED CIVIL ENGINEER

January 20, 2017
PLANS APPROVAL DATE

REGISTERED PROFESSIONAL ENGINEER — Randell D. Hiatt — No. C50200 — Exp. 6-30-17 — CIVIL — STATE OF CALIFORNIA

THE STATE OF CALIFORNIA OR ITS OFFICERS OR AGENTS SHALL NOT BE RESPONSIBLE FOR THE ACCURACY OR COMPLETENESS OF SCANNED COPIES OF THIS PLAN SHEET.

TO ACCOMPANY PLANS DATED _____

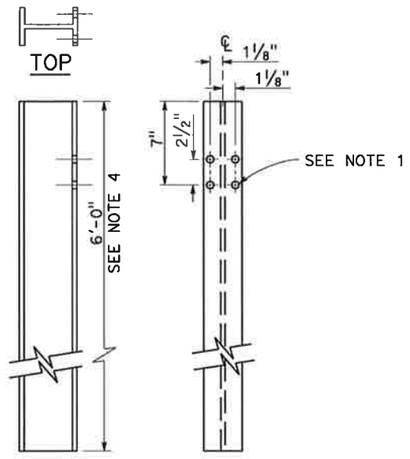

W6 x 9 OR W6 x 8.5 STEEL POST
See Note 4

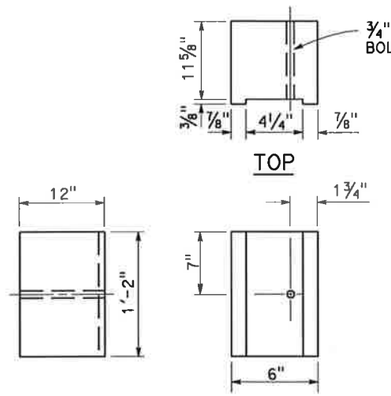

6" x 12" NOTCHED WOOD BLOCK
See Notes 2, 3 and 7

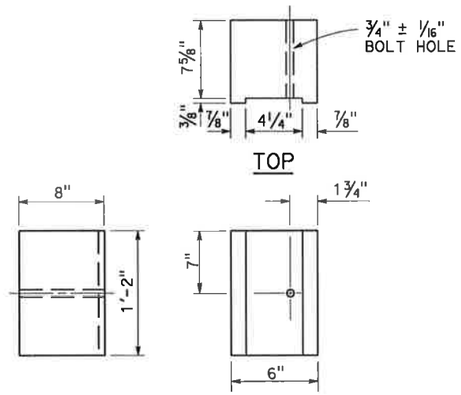

6" x 8" NOTCHED WOOD BLOCK
Only for use with metal beam guard railing. See Note 5

NOTES:

1. All holes in steel post shall be 13/16" Dia maximum.
2. Dimensions shown for wood block are nominal.
3. Notched face of block faces steel post.
4. 6'-0" length posts to be used for typical roadway installation. See Standard Plan A77N3.
5. See Revised Standard Plan RSP A77L3 for use of 6" x 8" and 8" x 8" notched wood blocks.
6. This post and 8" x 12" block combination to be used for line post sections of MGS on narrow roadways and where strengthened line post sections of MGS are warranted to shield fixed objects.
7. 6" x 12" notched wood block and 8" x 12" notched wood block must be used with 6" dike.

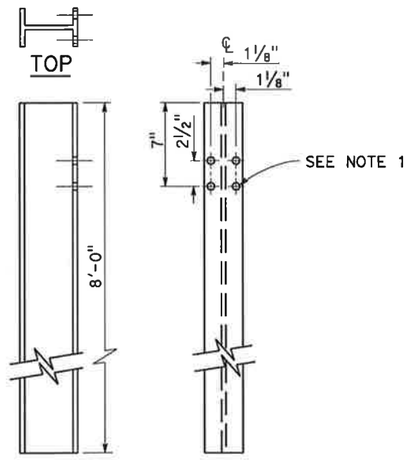

W6 x 9 OR W6 x 8.5 STEEL POST
See Note 6

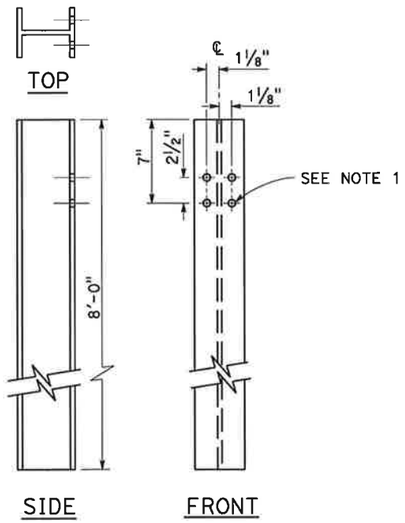

W6 x 15 STEEL POST

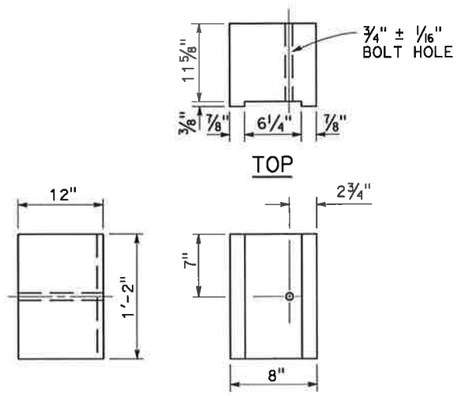

8" x 12" NOTCHED WOOD BLOCK
See Notes 2, 3 and 7

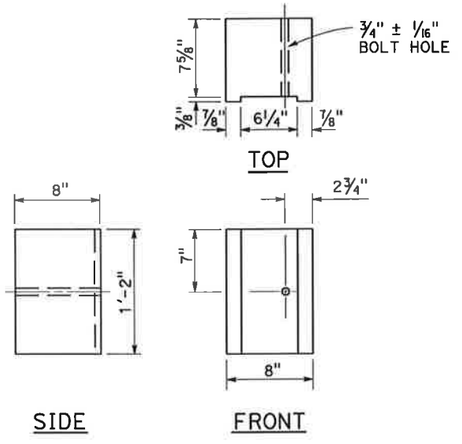

8" x 8" NOTCHED WOOD BLOCK
Only for use with metal beam guard railing. See Note 5

STATE OF CALIFORNIA
DEPARTMENT OF TRANSPORTATION

MIDWEST GUARDRAIL SYSTEM STEEL POST AND NOTCHED WOOD BLOCK DETAILS

NO SCALE

RSP A77N2 DATED JANUARY 20, 2017 SUPERSEDES STANDARD PLAN A77N2 DATED OCTOBER 30, 2015 - PAGE 54 OF THE STANDARD PLANS BOOK DATED 2015.

REVISED STANDARD PLAN RSP A77N2

2015 REVISED STANDARD PLAN RSP A77N2

11-8-16

© 2017 California Department of Transportation
All Rights Reserved

Dist	COUNTY	ROUTE	POST MILES TOTAL PROJECT	SHEET No.	TOTAL SHEETS
04	SCL	101,237	45.2/45.8 2.7/3.3	573	736

Randell D. Hiatt
REGISTERED CIVIL ENGINEER

January 20, 2017
PLANS APPROVAL DATE

REGISTERED PROFESSIONAL ENGINEER — Randell D. Hiatt No. C50200 Exp. 6-30-17 CIVIL — STATE OF CALIFORNIA

THE STATE OF CALIFORNIA OR ITS OFFICERS OR AGENTS SHALL NOT BE RESPONSIBLE FOR THE ACCURACY OR COMPLETENESS OF SCANNED COPIES OF THIS PLAN SHEET.

TO ACCOMPANY PLANS DATED _____

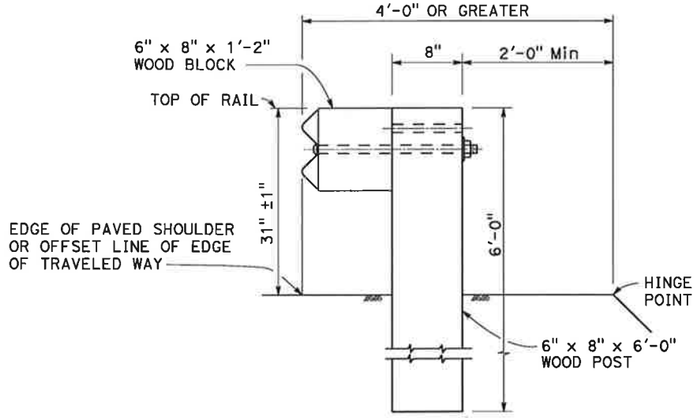

DETAIL A

TYPICAL ROADWAY INSTALLATION

See Note 1

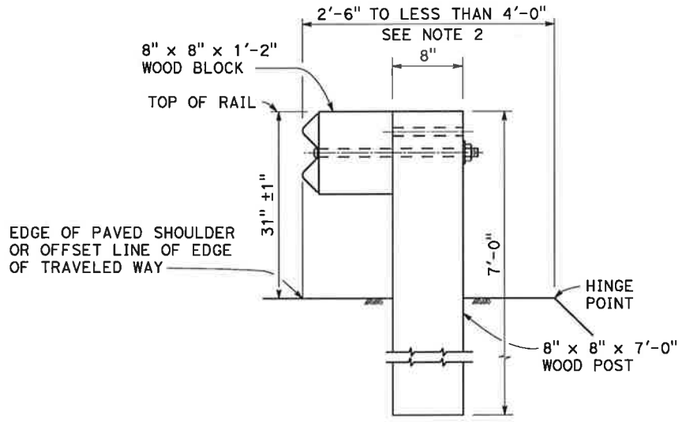

DETAIL B

NARROW ROADWAY INSTALLATION

See Note 1

POST EMBEDMENT

NOTES:

1. These installation details also applicable to steel line post installations. For Detail A, C, and D, where steel line post installations are constructed, W6 x 8.5 or W6 x 9 steel post, 6'-0" in length, with 6" x 8" x 1'-2" notched wood blocks or notched recycled plastic blocks are to be used in place of the size of wood post and wood block shown. For Detail B, where steel line post installations are constructed, W6 x 8.5 or W6 x 9 steel post, 8'-0" in length, with 8" x 8" x 1'-2" notched wood blocks or notched recycled plastic blocks are to be used in place of the size of wood post and wood block shown. For additional installation details, see Revised Standard Plans RSP A77L1 and RSP A77L2.
2. Where the distance between the face of the rail and the hinge point is less than 2'-6", see the Project Plans for special details.
3. For dike positioning with MGS installations, see Standard Plan A77N4.

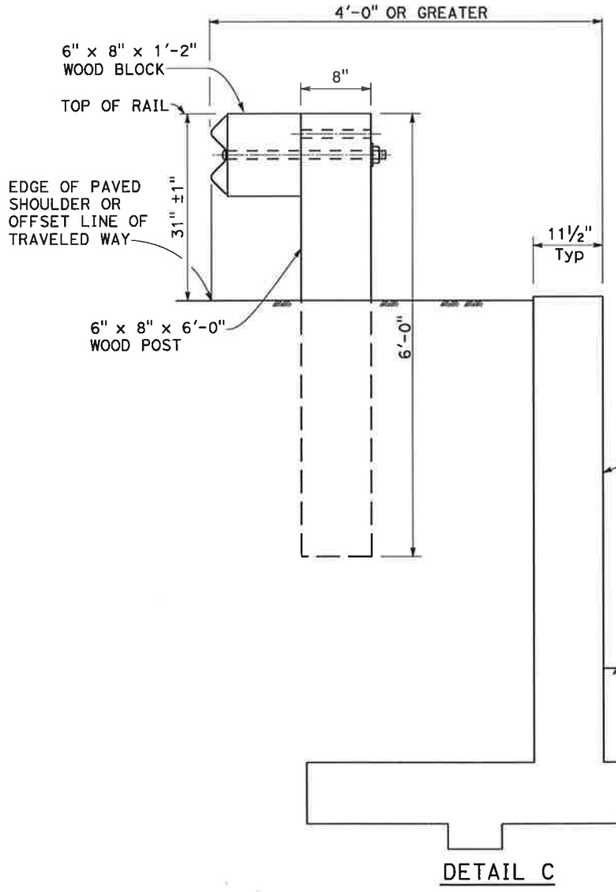

DETAIL C

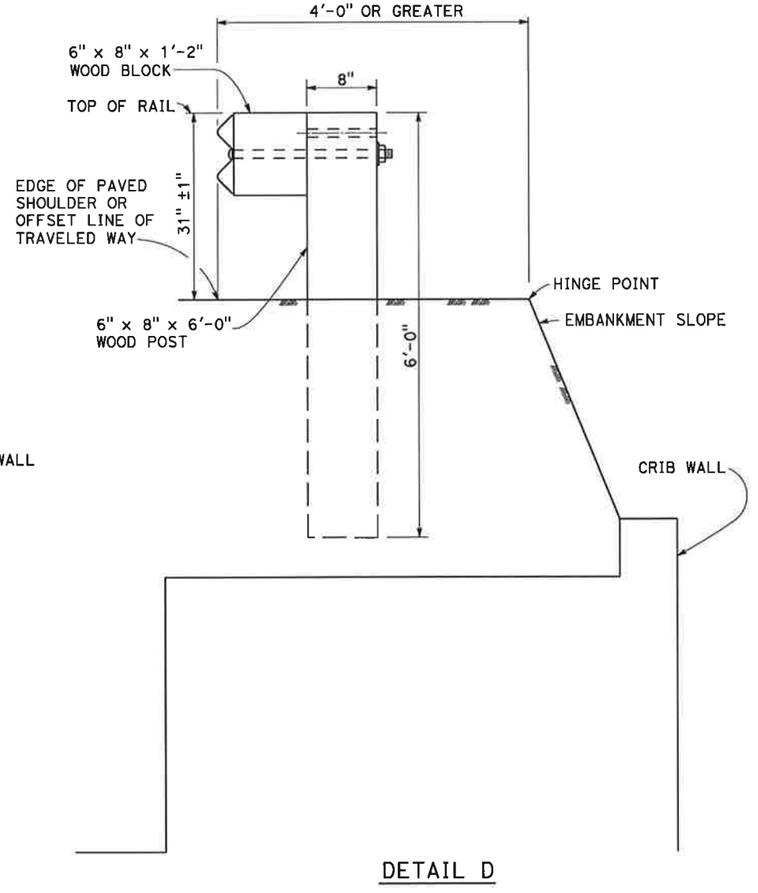

DETAIL D

INSTALLATION AT EARTH RETAINING WALLS

STATE OF CALIFORNIA
DEPARTMENT OF TRANSPORTATION

MIDWEST GUARDRAIL SYSTEM TYPICAL LINE POST EMBEDMENT AND HINGE POINT OFFSET DETAILS

NO SCALE

RSP A77N3 DATED JANUARY 20, 2017 SUPERSEDES STANDARD PLAN A77N3 DATED OCTOBER 30, 2015 - PAGE 55 OF THE STANDARD PLANS BOOK DATED 2015.

REVISED STANDARD PLAN RSP A77N3

2015 REVISED STANDARD PLAN RSP A77N3

1-6-17

© 2018 California Department of Transportation
All Rights Reserved

Dist	COUNTY	ROUTE	POST MILES TOTAL PROJECT	SHEET No.	TOTAL SHEETS
04	SCL	101,237	45.2/45.8 2.7/3.3	574	736

Chi H. Wong
REGISTERED CIVIL ENGINEER

April 20, 2018
PLANS APPROVAL DATE

REGISTERED PROFESSIONAL ENGINEER — Chi H. Wong — No. C054738 — Exp. 12-31-19 — CIVIL — STATE OF CALIFORNIA

THE STATE OF CALIFORNIA OR ITS OFFICERS OR AGENTS SHALL NOT BE RESPONSIBLE FOR THE ACCURACY OR COMPLETENESS OF SCANNED COPIES OF THIS PLAN SHEET.

TO ACCOMPANY PLANS DATED _____

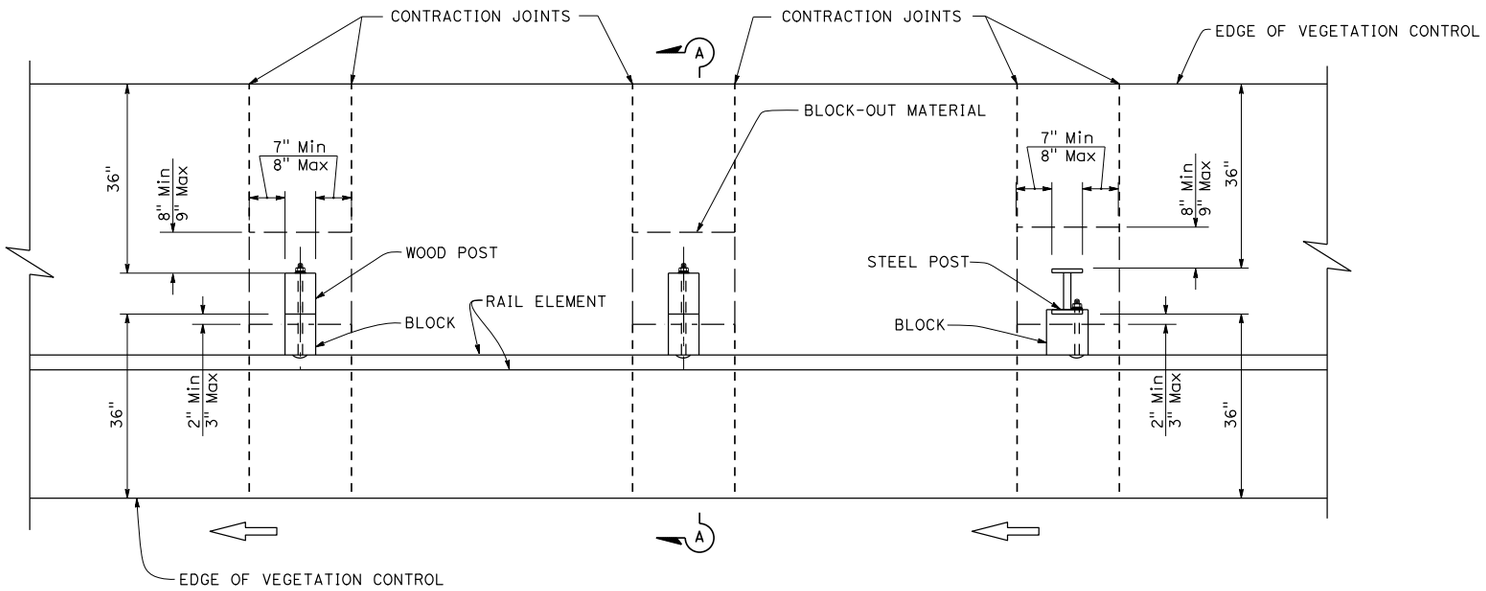

PLAN

NOTES:

1. Where the distance between back of post and hinge point is less than 42", construct vegetation control to 6" from hinge point while maintaining the 8" block-out at back of post.
2. Where paved shoulder is constructed within 36" in front of the post, construct vegetation control to the edge of paved shoulder.
3. For wood post sizes, see Revised Standard Plan RSP A77N1.
4. For steel post sizes, see Revised Standard Plan RSP A77N2.
5. For details not shown, see Revised Standard Plans RSP A77L1 and RSP A77L2.
6. Where vegetation control is adjacent to a dike on a cut slope, construct vegetation control flush with the top edge of dike.
7. Vegetation control must slope to drain water.
8. Concrete over block-out material depth, construct ⅜" Min to ⅝" Max.
9. This plan for vegetation control installation only.

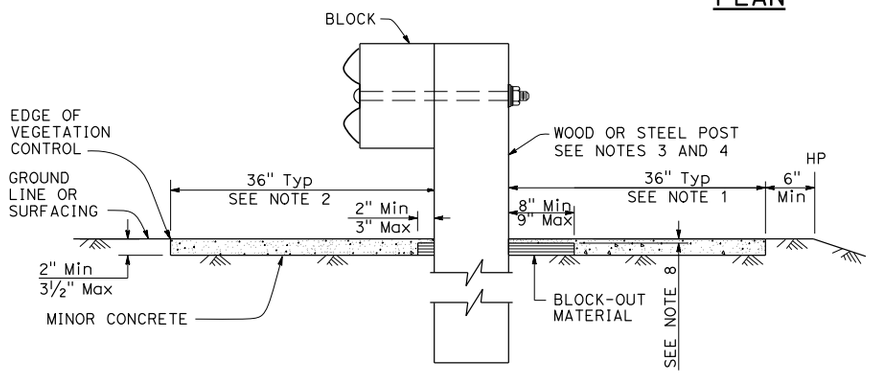

SECTION A-A
Without Existing Dike

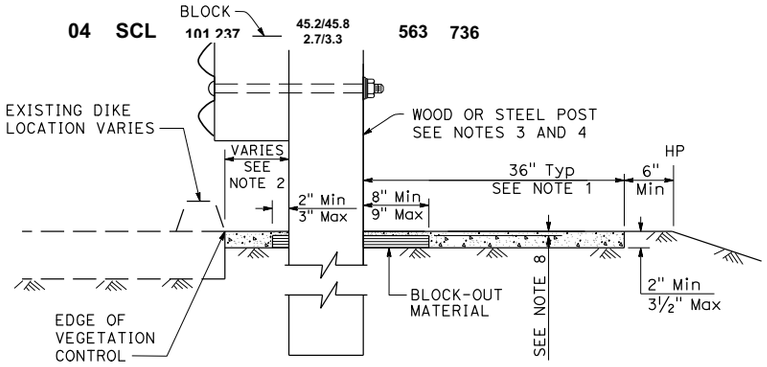

SECTION A-A
With Existing Dike

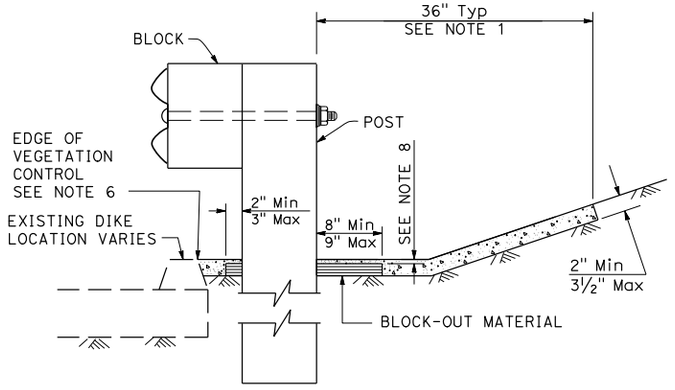

SECTION A-A
With Existing Dike
on cut slope

STATE OF CALIFORNIA
DEPARTMENT OF TRANSPORTATION

MINOR CONCRETE VEGETATION CONTROL GUARDRAIL SYSTEM

NO SCALE

RSP A77N5 DATED APRIL 20, 2018 SUPERSEDES RSP A77N5 DATED JULY 21, 2017 AND STANDARD PLAN A77N5 DATED OCTOBER 30, 2015 - PAGE 57 OF THE STANDARD PLANS BOOK DATED 2015.

REVISED STANDARD PLAN RSP A77N5

12-12-17

2015 REVISED STANDARD PLAN RSP A77N5

© 2018 California Department of Transportation
All Rights Reserved

Dist	COUNTY	ROUTE	POST MILES TOTAL PROJECT	SHEET No.	TOTAL SHEETS
04	SCL	101,237	45.2/45.8 2.7/3.3	575	736

Chi H. Wong
REGISTERED CIVIL ENGINEER

April 20, 2018
PLANS APPROVAL DATE

REGISTERED PROFESSIONAL ENGINEER
Chi H. Wong
No. C054738
Exp. 12-31-19
CIVIL
STATE OF CALIFORNIA

THE STATE OF CALIFORNIA OR ITS OFFICERS OR AGENTS SHALL NOT BE RESPONSIBLE FOR THE ACCURACY OR COMPLETENESS OF SCANNED COPIES OF THIS PLAN SHEET.

TO ACCOMPANY PLANS DATED _____

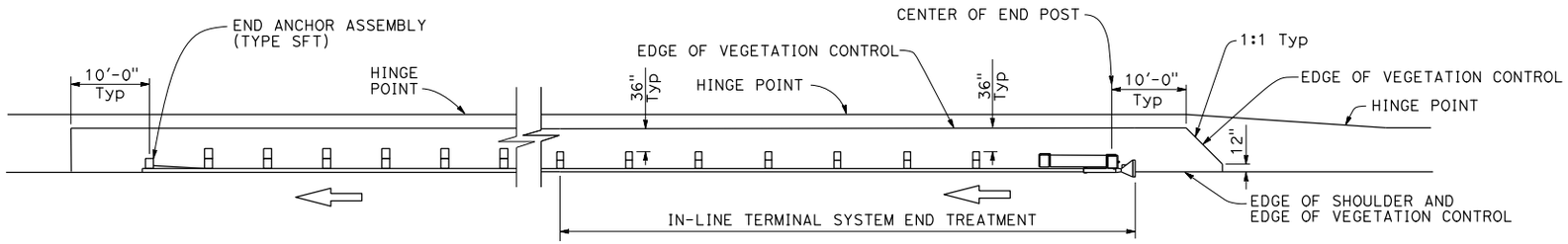

PLAN

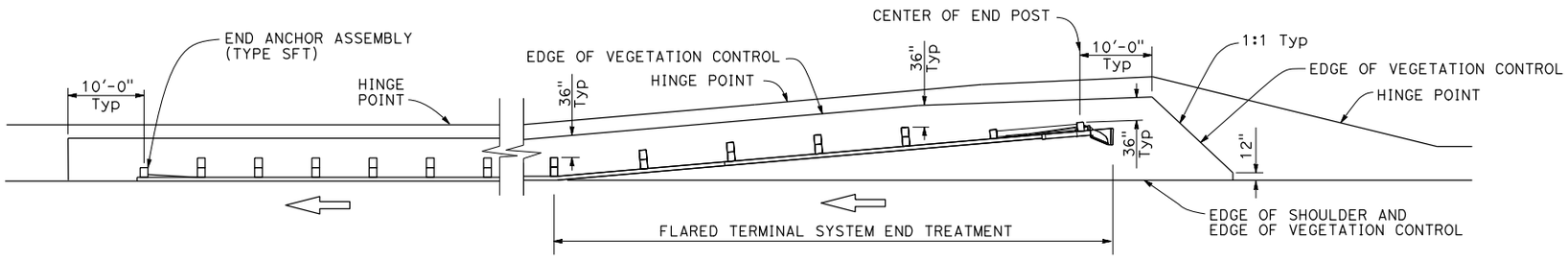

PLAN

NOTES:

1. See Revised Standard Plan RSP A77N5 for additional vegetation control details.
2. Where the distance between back of post and hinge point is less than 42", construct vegetation control to 6" from hinge point while maintaining the 8" block-out at back of post.
3. Vegetation control must slope to drain water.
4. This plan for vegetation control installation only.

STATE OF CALIFORNIA
DEPARTMENT OF TRANSPORTATION

MINOR CONCRETE VEGETATION CONTROL GUARDRAIL SYSTEM FOR TERMINAL SYSTEM END TREATMENTS

NO SCALE

RSP A77N6 DATED APRIL 20, 2018 SUPERSEDES RSP A77N6
DATED JULY 21, 2017 AND RSP A77N6 DATED JANUARY 20, 2017 AND STANDARD PLAN A77N6
DATED OCTOBER 30, 2015 - PAGE 58 OF THE STANDARD PLANS BOOK DATED 2015.

REVISED STANDARD PLAN RSP A77N6

2015 REVISED STANDARD PLAN RSP A77N6

12-12-17

© 2018 California Department of Transportation
All Rights Reserved

Dist	COUNTY	ROUTE	POST MILES TOTAL PROJECT	SHEET No.	TOTAL SHEETS
04	SCL	101 237	45.2/45.8 2.7/3.3	576	736

Chi H. Wong
REGISTERED CIVIL ENGINEER

April 20, 2018
PLANS APPROVAL DATE

Chi H. Wong
No. C054738
Exp. 12-31-19
CIVIL
REGISTERED PROFESSIONAL ENGINEER
STATE OF CALIFORNIA

THE STATE OF CALIFORNIA OR ITS OFFICERS OR AGENTS SHALL NOT BE RESPONSIBLE FOR THE ACCURACY OR COMPLETENESS OF SCANNED COPIES OF THIS PLAN SHEET.

TO ACCOMPANY PLANS DATED _____

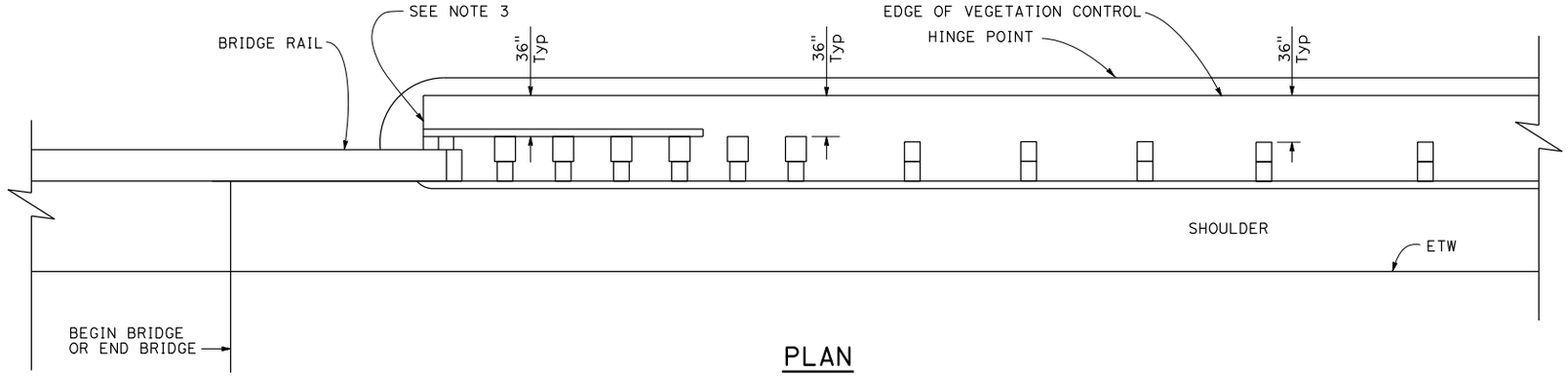

PLAN

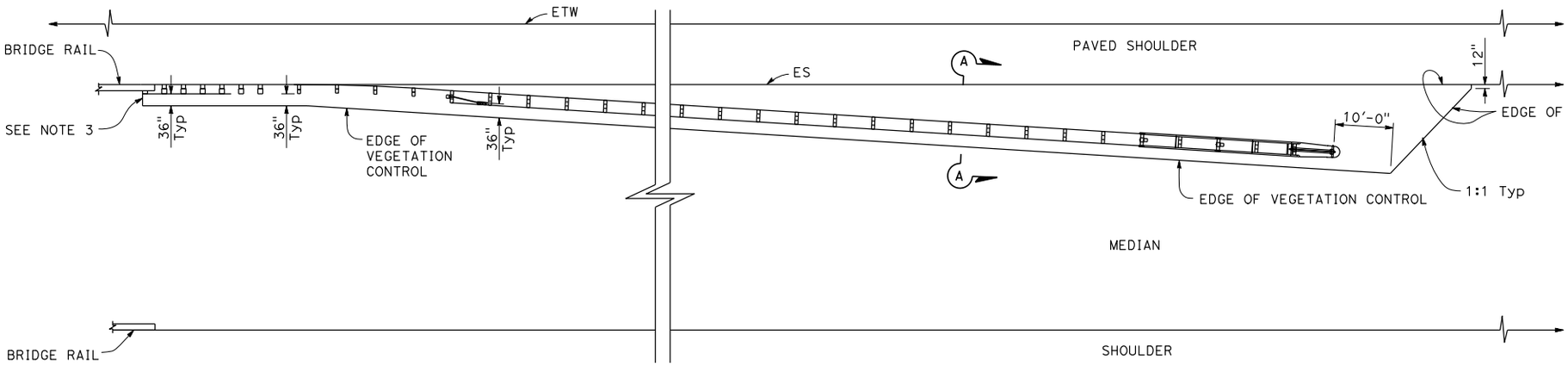

PLAN

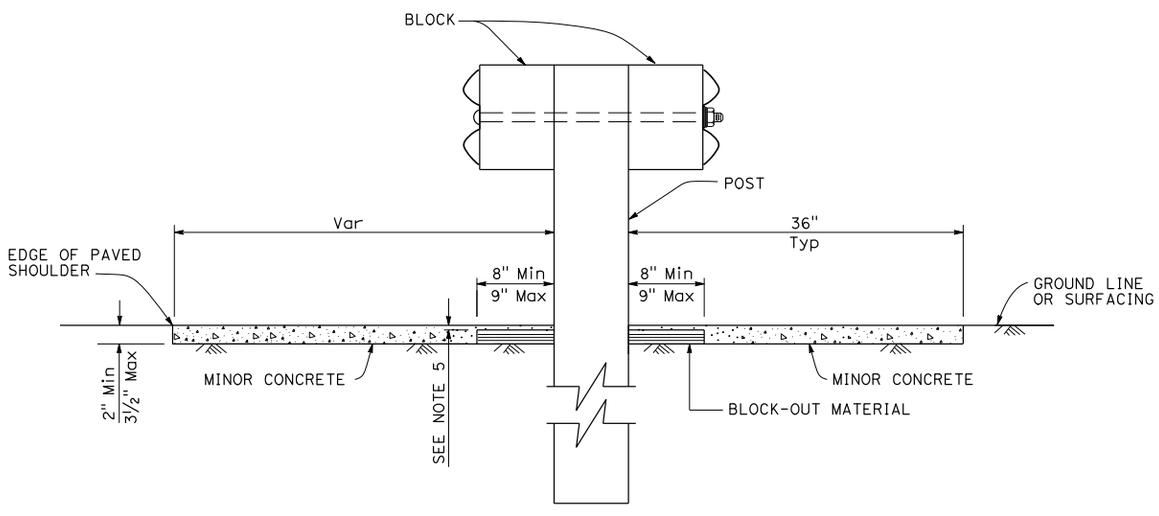

SECTION A-A

NOTES:

1. See Revised Standard Plan RSP A77N5 for additional vegetation control details.
2. Where the distance between back of post and hinge point is less than 42", construct vegetation control to 6" from hinge point while maintaining the 8" block-out at back of post.
3. End vegetation control at end of backside rail element.
4. Vegetation control must slope to drain water.
5. Concrete over block-out material depth, construct ⅜" Min to ⅝" Max.
6. This plan for vegetation control installation only.

STATE OF CALIFORNIA
DEPARTMENT OF TRANSPORTATION

MINOR CONCRETE VEGETATION CONTROL GUARDRAIL SYSTEM AT STRUCTURE APPROACH

NO SCALE

RSP A77N7 DATED APRIL 20, 2018 SUPERSEDES RSP A77N7
DATED JULY 21, 2017 AND STANDARD PLAN A77N7
DATED OCTOBER 30, 2015 - PAGE 59 OF THE STANDARD PLANS BOOK DATED 2015.

REVISED STANDARD PLAN RSP A77N7

2015 REVISED STANDARD PLAN RSP A77N7

12-12-17

© 2018 California Department of Transportation
All Rights Reserved

Dist	COUNTY	ROUTE	POST MILES TOTAL PROJECT	SHEET No.	TOTAL SHEETS
04	SCL	101,237	45.2/45.8 2.7/3.3	577	736

Chi H. Wong
REGISTERED CIVIL ENGINEER

April 20, 2018
PLANS APPROVAL DATE

REGISTERED PROFESSIONAL ENGINEER
Chi H. Wong
No. C054738
Exp. 12-31-19
CIVIL
STATE OF CALIFORNIA

THE STATE OF CALIFORNIA OR ITS OFFICERS OR AGENTS SHALL NOT BE RESPONSIBLE FOR THE ACCURACY OR COMPLETENESS OF SCANNED COPIES OF THIS PLAN SHEET.

TO ACCOMPANY PLANS DATED _____

NOTES:

1. See Revised Standard Plan RSP A77N5 for additional vegetation control details.
2. Where paved shoulder is constructed within 36" in front of the post, construct vegetation control to the edge of paved shoulder.
3. Vegetation control must slope to drain water.
4. This plan for vegetation control installation only.

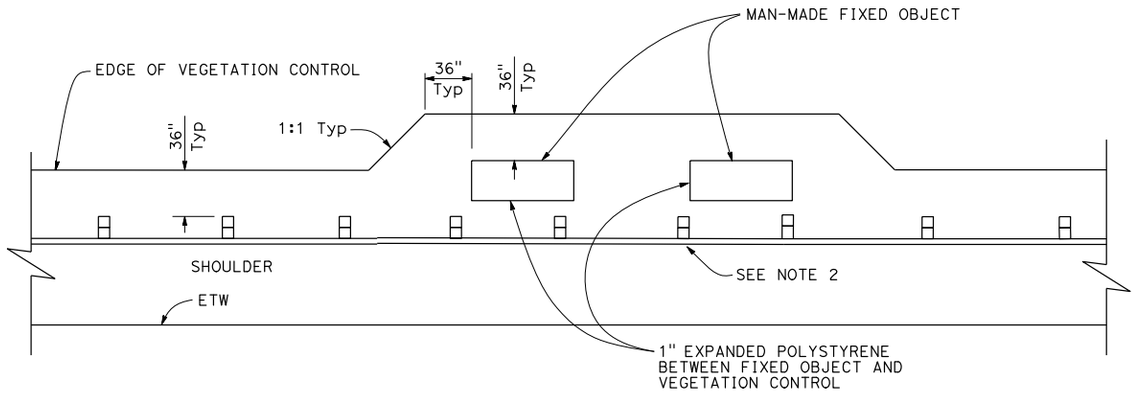

PLAN

Fixed object(s) on shoulder

STATE OF CALIFORNIA
DEPARTMENT OF TRANSPORTATION

MINOR CONCRETE VEGETATION CONTROL GUARDRAIL SYSTEM AT FIXED OBJECT

NO SCALE

RSP A77N8 DATED APRIL 20, 2018 SUPERSEDES RSP A77N8 DATED JULY 21, 2017 AND STANDARD PLAN A77N8 DATED OCTOBER 30, 2015 - PAGE 60 OF THE STANDARD PLANS BOOK DATED 2015.

REVISED STANDARD PLAN RSP A77N8

2015 REVISED STANDARD PLAN RSP A77N8

12-12-17

© 2018 California Department of Transportation
All Rights Reserved

Dist	COUNTY	ROUTE	POST MILES TOTAL PROJECT	SHEET No.	TOTAL SHEETS
04	SCL	101.237	45.2/45.8 2.7/3.3	578	736

Chi H. Wong
REGISTERED CIVIL ENGINEER

April 20, 2018
PLANS APPROVAL DATE

REGISTERED PROFESSIONAL ENGINEER
Chi H. Wong
No. C054738
Exp. 12-31-19
CIVIL
STATE OF CALIFORNIA

THE STATE OF CALIFORNIA OR ITS OFFICERS OR AGENTS SHALL NOT BE RESPONSIBLE FOR THE ACCURACY OR COMPLETENESS OF SCANNED COPIES OF THIS PLAN SHEET.

TO ACCOMPANY PLANS DATED _____

NOTES:

1. See Revised Standard Plan RSP A77N5 for additional vegetation control details.
2. Where paved shoulder is constructed within 36" in front of the post, construct vegetation control to the edge of paved shoulder.
3. Vegetation control must slope to drain water.
4. Concrete over block-out material depth, construct ⅜" Min to ⅝" Max.
5. This plan for vegetation control installation only.

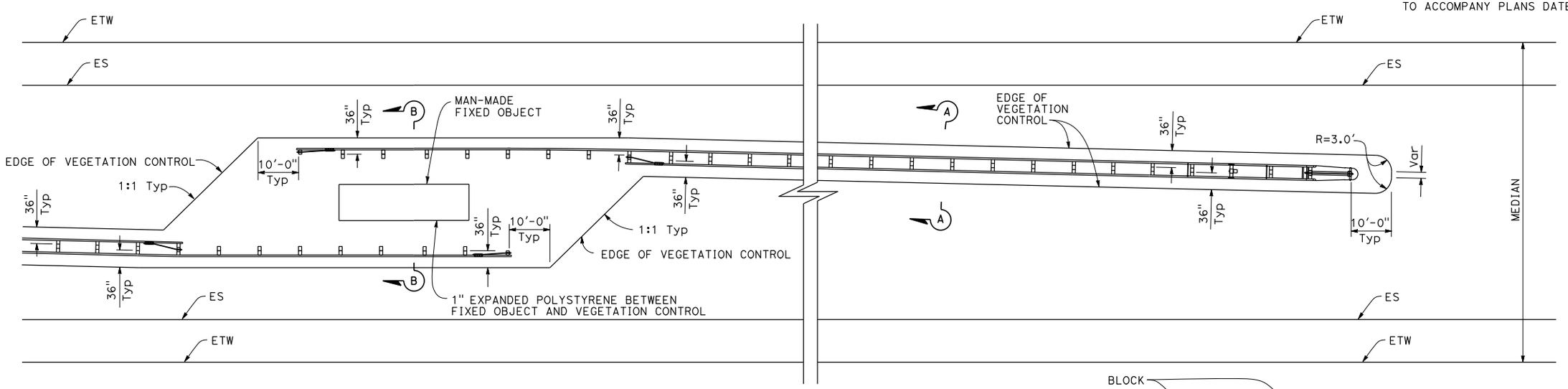

PLAN

Fixed object(s) in median

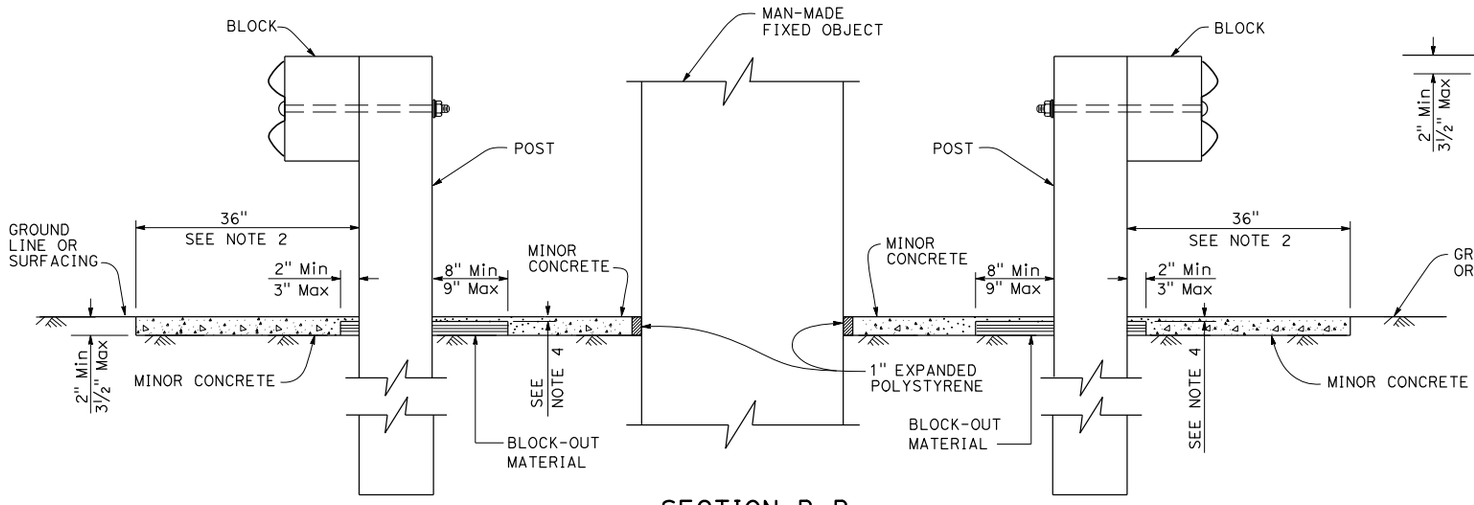

SECTION B-B

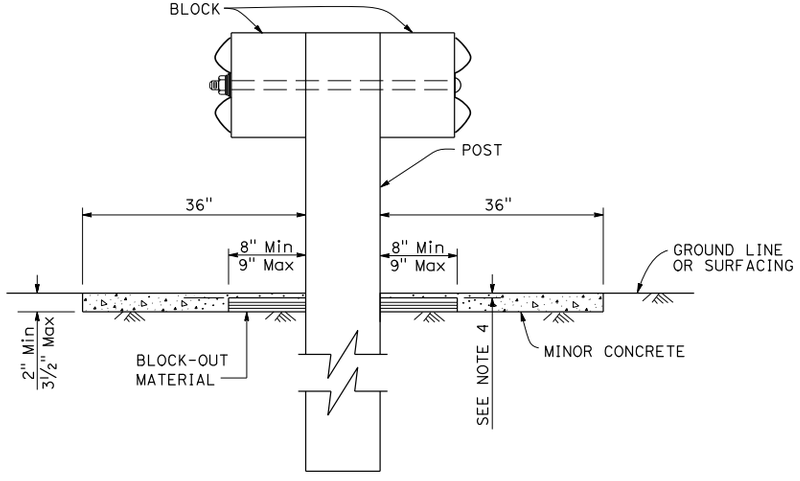

SECTION A-A

STATE OF CALIFORNIA
DEPARTMENT OF TRANSPORTATION

MINOR CONCRETE VEGETATION CONTROL GUARDRAIL SYSTEM AT FIXED OBJECT

NO SCALE

RSP A77N9 DATED APRIL 20, 2018 SUPERSEDES RSP A77N9 DATED JULY 21, 2017 AND STANDARD PLAN A77N9 DATED OCTOBER 30, 2015 - PAGE 61 OF THE STANDARD PLANS BOOK DATED 2015.

REVISED STANDARD PLAN RSP A77N9

2015 REVISED STANDARD PLAN RSP A77N9

12-12-17

© 2018 California Department of Transportation
All Rights Reserved

Dist	COUNTY	ROUTE	POST MILES TOTAL PROJECT	SHEET No.	TOTAL SHEETS
04	SCL	101,237	45.2/45.8 2.7/3.3	579	736

Chi H. Wong
REGISTERED CIVIL ENGINEER

April 20, 2018
PLANS APPROVAL DATE

REGISTERED PROFESSIONAL ENGINEER
Chi H. Wong
No. C054738
Exp. 12-31-19
CIVIL
STATE OF CALIFORNIA

THE STATE OF CALIFORNIA OR ITS OFFICERS OR AGENTS SHALL NOT BE RESPONSIBLE FOR THE ACCURACY OR COMPLETENESS OF SCANNED COPIES OF THIS PLAN SHEET.

TO ACCOMPANY PLANS DATED _____

NOTES:

1. See Revised Standard Plan RSP A77N5 for additional vegetation control details.
2. Where paved shoulder is constructed within 36" in front of the post, construct vegetation control to the edge of paved shoulder.
3. Vegetation control must slope to drain water.
4. Concrete over block-out material depth, construct 3/8" Min to 5/8" Max.
5. This plan for vegetation control installation only.

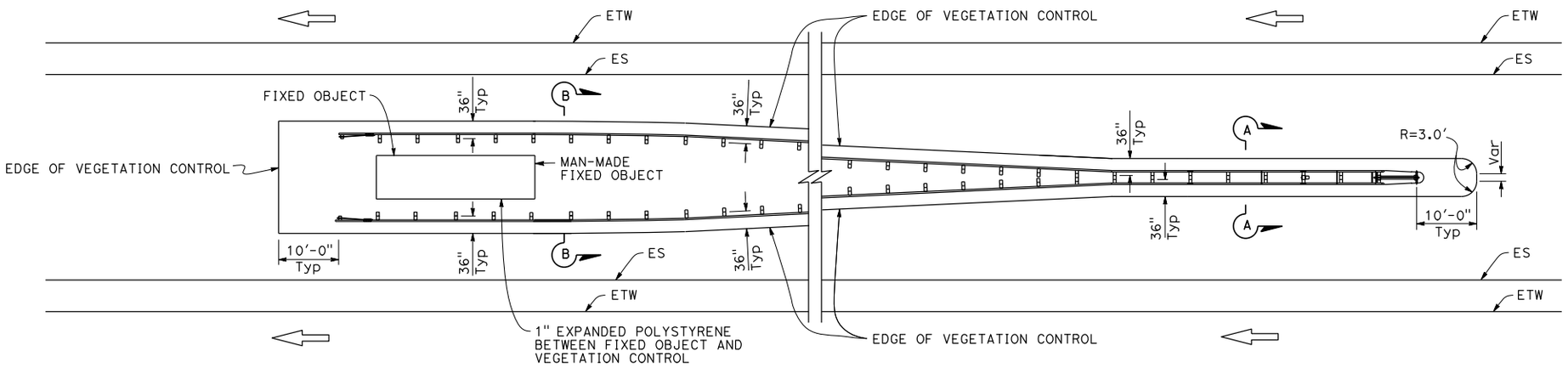

PLAN

Fixed object(s) between separate roadbeds
(One-Way Traffic)

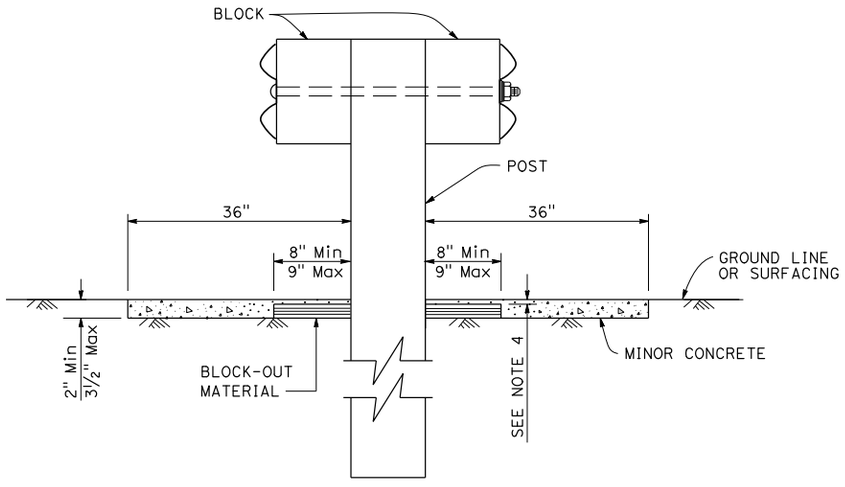

SECTION A-A

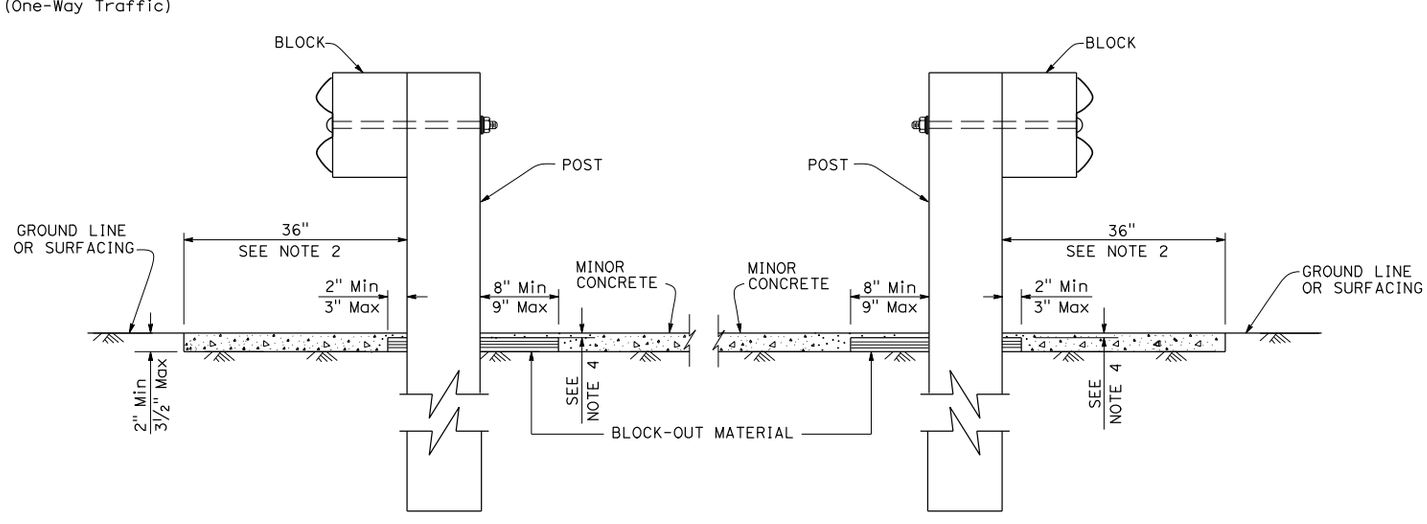

SECTION B-B

STATE OF CALIFORNIA
DEPARTMENT OF TRANSPORTATION

MINOR CONCRETE VEGETATION CONTROL GUARDRAIL SYSTEM AT FIXED OBJECT

NO SCALE

RSP A77N10 DATED APRIL 20, 2018 SUPERSEDES RSP A77N10 DATED JULY 21, 2017 AND STANDARD PLAN A77N10 DATED OCTOBER 30, 2015 - PAGE 62 OF THE STANDARD PLANS BOOK DATED 2015.

REVISED STANDARD PLAN RSP A77N10

2015 REVISED STANDARD PLAN RSP A77N10

12-12-17

© 2017 California Department of Transportation
All Rights Reserved

Dist	COUNTY	ROUTE	POST MILES TOTAL PROJECT	SHEET No.	TOTAL SHEETS
04	SCL	101,237	45.2/45.8 2.7/3.3	580	736

Randell D. Hiatt
REGISTERED CIVIL ENGINEER

January 20, 2017
PLANS APPROVAL DATE

THE STATE OF CALIFORNIA OR ITS OFFICERS OR AGENTS SHALL NOT BE RESPONSIBLE FOR THE ACCURACY OR COMPLETENESS OF SCANNED COPIES OF THIS PLAN SHEET.

REGISTERED PROFESSIONAL ENGINEER
Randell D. Hiatt
No. C50200
Exp. 6-30-17
CIVIL
STATE OF CALIFORNIA

TO ACCOMPANY PLANS DATED _____

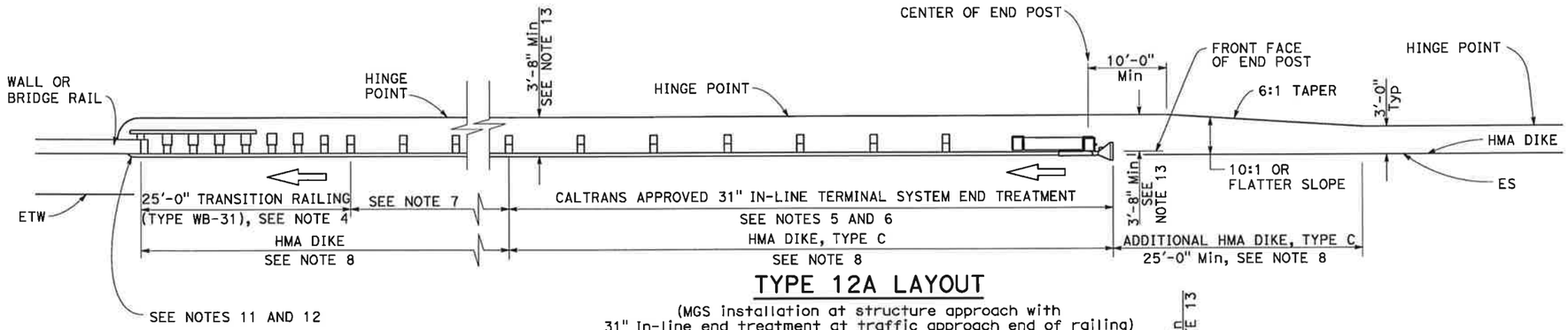

TYPE 12A LAYOUT

(MGS installation at structure approach with
31" In-line end treatment at traffic approach end of railing)
See Note 9

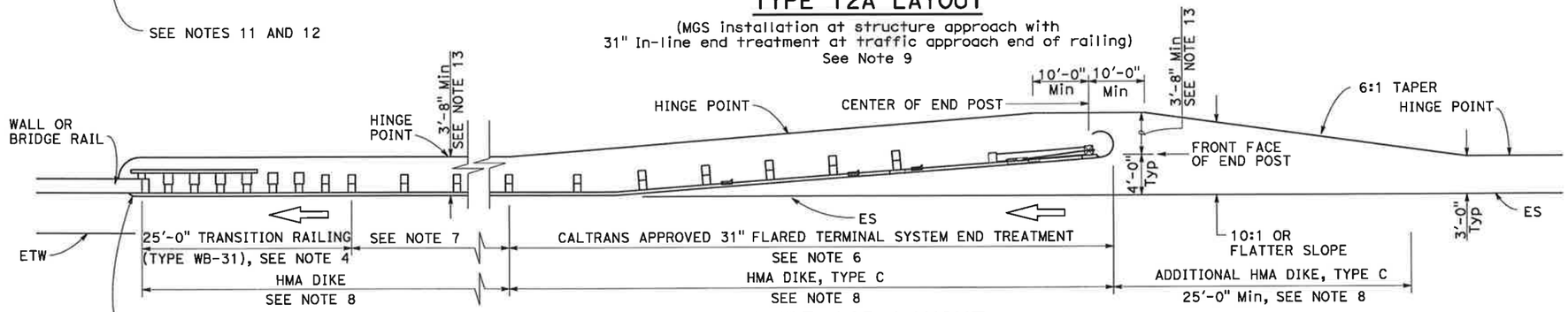

TYPE 12B LAYOUT

(MGS installation at structure approach with
31" Flared end treatment at traffic approach end of railing)
See Note 9

NOTES:

1. Line post, blocks and hardware to be used are shown on Revised Standard Plans RSP A77L1, RSP A77L2, RSP A77N1, RSP A77N2 and Standard Plan A77M1.
2. MGS post spacing to be 6'-3" center to center, except as otherwise noted.
3. Except as noted, line posts are 6" x 8" x 6'-0" wood with 6" x 8" x 1'-2" wood blocks. W6 x 8.5 or W6 x 9 steel posts, 6'-0" in length, with 6" x 8" x 1'-2" notched wood blocks or plastic blocks may be used for 6" x 8" x 6'-0" wood posts with 6" x 8" x 1'-2" wood blocks where applicable and when specified.
4. For Transition Railing (Type WB-31) details for Types 12A and 12B Layouts, see Standard Plan A77U4.
5. 31" in-line terminal system end treatments are used where site conditions will not accommodate a 31" flared end treatment.
6. The type of 31" terminal system end treatment to be used will be shown on the Project Plans.
7. Dependent on site conditions (embankment height, side slopes, or other fixed objects), it may be advisable to construct additional guard railing (a length equal to multiples of 12'-6" with 6'-3" post spacing) between the transition railing and end treatment. A 12.5 degree angle of departure can be drawn on the Project Plans from the edge of traveled way through the outer most point of the fixed object to determine the additional length of railing needed.
8. Where placement of dike is required with guard railing installations, see Standard Plan A77N4 for dike positioning details.
9. Type 12A or Type 12B Layouts are typically used:
   a. To the right of approaching traffic, at the end of a structure, on two-lane conventional highway where the roadbed width across the structure is less than 40 feet.
   b. To the left of approaching traffic, at the end of a structure, on two-lane conventional highway where the roadbed width across the structure is less than 40 feet.
   c. To the right of approaching traffic at the end of each structure on multilane freeways or expressways with separate adjacent or parallel bridges.
   d. To the right of approaching traffic at the end of the structure on multilane freeways or expressways with decked median on the bridge.
10. See Revised Standard Plan RSP A77Q3 for typical layout used left of approaching traffic at the ends of each structure on multilane freeways or expressways with separate adjacent or parallel bridges.
11. For additional details of typical connections to bridge rail, see Connection Detail AA on Standard Plans A77U1 and A77U2 and Connection Detail FF on Standard Plans A77V1 and A77V2.
12. For additional details of a typical connection to walls or abutments, see Standard Plan A77U3.
13. Use this offset for 8" block. For 12" block, use 4'-0" Min offset.

STATE OF CALIFORNIA
DEPARTMENT OF TRANSPORTATION

MIDWEST GUARDRAIL SYSTEM TYPICAL LAYOUTS FOR STRUCTURE APPROACH

NO SCALE

RSP A77Q1 DATED JANUARY 20, 2017 SUPERSEDES STANDARD PLAN A77Q1
DATED OCTOBER 30, 2015 - PAGE 69 OF THE STANDARD PLANS BOOK DATED 2015.

REVISED STANDARD PLAN RSP A77Q1

10-7-16

2015 REVISED STANDARD PLAN RSP A77Q1

© 2017 California Department of Transportation
All Rights Reserved

Dist	COUNTY	ROUTE	POST MILES TOTAL PROJECT	SHEET No.	TOTAL SHEETS
04	SCL	101,237	45.2/45.8 2.7/3.3	581	736

Randell D. Hiatt
REGISTERED CIVIL ENGINEER

January 20, 2017
PLANS APPROVAL DATE

THE STATE OF CALIFORNIA OR ITS OFFICERS OR AGENTS SHALL NOT BE RESPONSIBLE FOR THE ACCURACY OR COMPLETENESS OF SCANNED COPIES OF THIS PLAN SHEET.

REGISTERED PROFESSIONAL ENGINEER
Randell D. Hiatt
No. C50200
Exp. 6-30-17
CIVIL
STATE OF CALIFORNIA

TO ACCOMPANY PLANS DATED _____

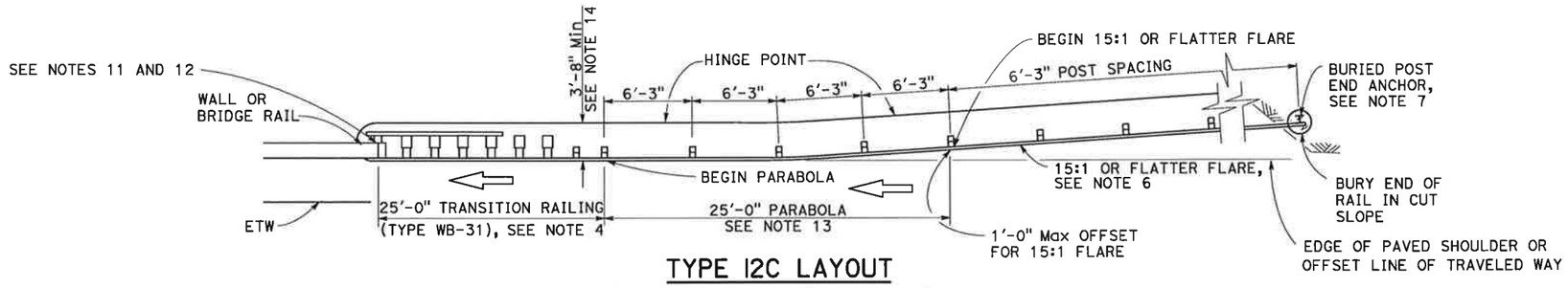

TYPE 12C LAYOUT

(MGS installation at structure approach with a
Buried end anchor treatment at traffic approach end of railing)
See Notes 8 and 9

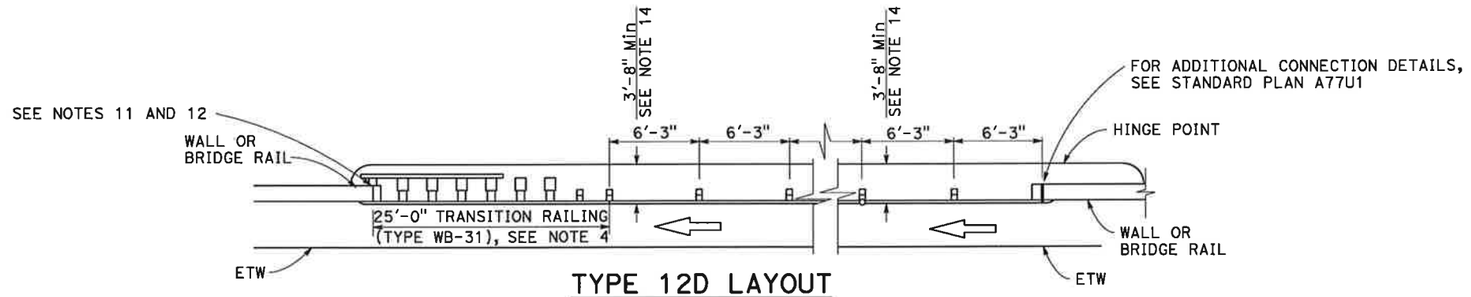

TYPE 12D LAYOUT

(Continuous MGS installation between structures)
See Notes 5 and 9

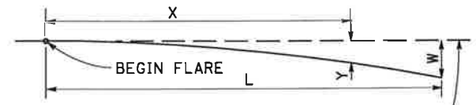

BASE LINE (EDGE OF PAVED SHOULDER OR OFFSET LINE OF EDGE OF TRAVELED WAY)

$Y = \frac{WX^2}{L^2}$

Y = OFFSET FROM BASE LINE
W = MAXIMUM OFFSET
X = DISTANCE ALONG BASE LINE
L = LENGTH OF FLARE

PARABOLIC FLARE OFFSETS

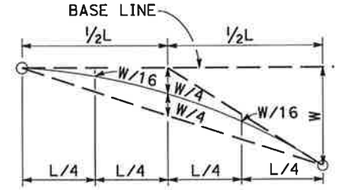

TYPICAL PARABOLIC LAYOUT

NOTES:

1. Line post, blocks and hardware to be used are shown on Revised Standard Plans RSP A77L1, RSP A77L2, RSP A77N1, RSP A77N2 and Standard Plan A77M1.
2. MGS post spacing to be 6'-3" center to center, except as otherwise noted.
3. Except as noted, line posts are 6" x 8" x 6'-0" m wood with 6" x 8" x 1'-2" wood blocks. W6 x 8.5 or W6 x 9 steel posts, 6'-0" in length, with 6" x 8" x 1'-2" notched wood blocks or plastic blocks may be used for 6" x 8" x 6'-0" wood posts with 6" x 8" x 1'-2" wood blocks where applicable and when specified.
4. For Transition Railing (Type WB-31) details for Types 12C and 12D Layouts, see Standard Plan A77U4.
5. Type 12D layout is typically used where continous MGS is recommended between structures.
6. The 15:1 or flatter flare for Type 12C Layout is based on the edge of the paved shoulder or offset line of edge of the traveled way. The length of MGS with the 15:1 or flatter flare is based on site conditions and should be a length equal to multiples of 12'-6".
7. For details of the buried post end anchor used with Type 12C Layout, see Standard Plan A77T2.
8. Where placement of dike is required with MGS installations, see Standard Plan A77N4 for dike positioning details.
9. Type 12C Layout is typically used:
   a. To the right of approaching traffic, at the end of the structure, on two-lane conventional highway where the roadbed width across the structure is less than 40 feet.
   b. To the left of approaching traffic, at each of a structure, on two-lane conventional highway where the roadbed width across the structure is less than 40 feet.
   c. To the right of approaching traffic at the end of each structure on multilane freeways or expressways with separate adjacent or parallel bridges.
   d. To the right of approaching traffic at the end of the structure on multilane freeways or expressways with decked median on the bridge.
10. See Revised Standard Plan RSP A77Q3 for typical layout used left of approaching traffic at the ends of each structure on multilane freeways or expressways with separate adjacent or parallel bridges.
11. For additional details of typical connections to bridge rail, see Connection Detail AA on Standard Plans A77U1 and A77U2 and Connection Detail FF on Standard Plans A77V1 and A77V2.
12. For additional details of a typical connection to walls or abutments, see Standard Plan A77U3.
13. For typical flare offsets for 25'-0" length parabola with maximum offset of 1'-0", see Revised Standard Plan RSP A77P1.
14. Use this offset for 8" block. For 12" block, use 4'-0" Min offset.

STATE OF CALIFORNIA
DEPARTMENT OF TRANSPORTATION

MIDWEST GUARDRAIL SYSTEM TYPICAL LAYOUTS FOR STRUCTURE APPROACH AND BETWEEN STRUCTURES

NO SCALE

RSP A77Q2 DATED JANUARY 20, 2017 SUPERSEDES STANDARD PLAN A77Q2
DATED OCTOBER 30, 2015 - PAGE 70 OF THE STANDARD PLANS BOOK DATED 2015.

REVISED STANDARD PLAN RSP A77Q2

2015 REVISED STANDARD PLAN RSP A77Q2

10-7-16

© 2017 California Department of Transportation
All Rights Reserved

Dist	COUNTY	ROUTE	POST MILES TOTAL PROJECT	SHEET No.	TOTAL SHEETS
04	SCL	101,237	45.2/45.8 2.7/3.3	582	736

Randell D. Hiatt
REGISTERED CIVIL ENGINEER

January 20, 2017
PLANS APPROVAL DATE

REGISTERED PROFESSIONAL ENGINEER
Randell D. Hiatt
No. C50200
Exp. 6-30-17
CIVIL
STATE OF CALIFORNIA

THE STATE OF CALIFORNIA OR ITS OFFICERS OR AGENTS SHALL NOT BE RESPONSIBLE FOR THE ACCURACY OR COMPLETENESS OF SCANNED COPIES OF THIS PLAN SHEET.

TO ACCOMPANY PLANS DATED _____

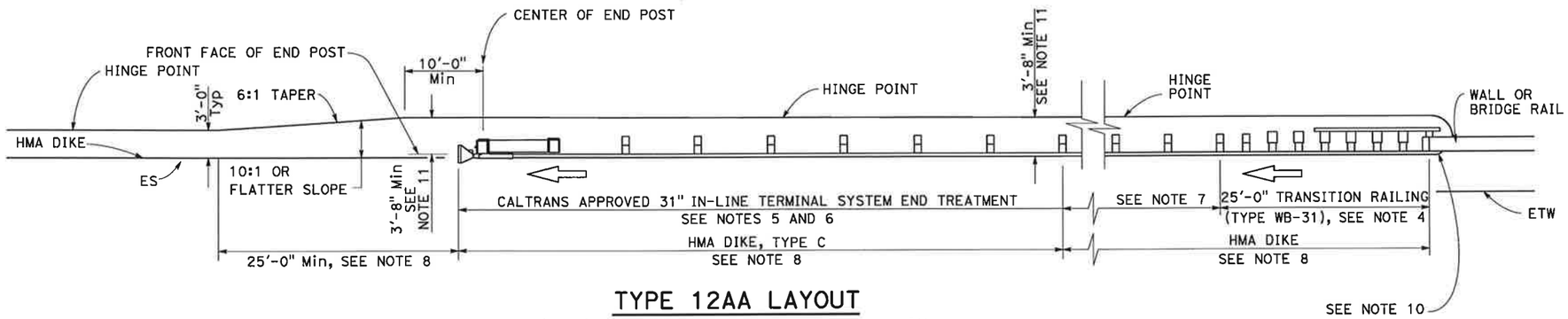

TYPE 12AA LAYOUT

(MGS installation at structure departure with
31" in-line end treatment at trailing end of railing)
See Notes 8 and 9

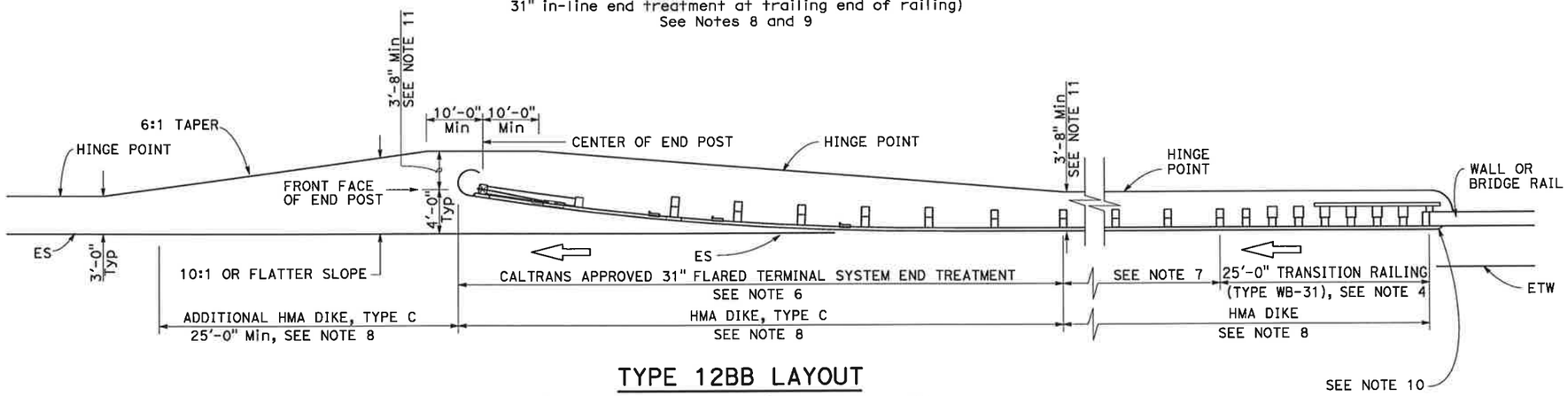

TYPE 12BB LAYOUT

(MGS installation at structure departure with
31" flared end treatment at trailing end of railing)
See Notes 8 and 9

NOTES:

1. Line post, blocks and hardware to be used are shown on Revised Standard Plans RSP A77L1, RSP A77L2, RSP A77N1, RSP A77N2 and Standard Plan A77M1.
2. MGS post spacing to be 6'-3" center to center, except as otherwise noted.
3. Except as noted, line posts are 6" x 8" x 6'-0" wood with 6" x 8" x 1'-2" wood blocks. W6 x 8.5 or W6 x 9 steel posts, 6'-0" in length, with 6" x 8" x 1-2" notched wood blocks or notched recycled plastic blocks may be used for 6" x 8" x 6'-0" wood posts with 6" x 8" x 1'-2" wood blocks where applicable and when specified.
4. For Transition Railing (Type WB-31) details for Types 12AA and 12BB Layouts, see Standard Plan A77U4.
5. 31" in-line terminal system treatments are used where site conditions will not accommodate a 31" flared end treatment.
6. The type of 31" terminal system to be used will be shown on the Project Plans.
7. Dependent on site conditions (embankment height, side slopes, other fixed objects), it may be advisable to construct additional MGS (a length equal to multiples of 12'-6" with 6'-3" post spacing) between the transition railing and 31" end treatments.
8. Where placement of dike is required with MGS installations, see Standard Plan A77N4 for dike positioning details.
9. Type 12AA or Type 12BB Layouts are typically used to the right of traffic departing a structure on two-way conventional highways where the roadbed width across the structure is less than 40 feet.
10. For additional details of typical connections to bridge rail, see Connection Detail CC on Standard Plan A77U2 and Connection Detail HH on Standard Plan A77V2.
11. Use this offset for 8" block. For 12" block, use 4'-0" Min offset.

STATE OF CALIFORNIA
DEPARTMENT OF TRANSPORTATION

MIDWEST GUARDRAIL SYSTEM TYPICAL LAYOUTS FOR STRUCTURE DEPARTURE

NO SCALE

RSP A77Q4 DATED JANUARY 20, 2017 SUPERSEDES STANDARD PLAN A77Q4
DATED OCTOBER 30, 2015 - PAGE 72 OF THE STANDARD PLANS BOOK DATED 2015.

REVISED STANDARD PLAN RSP A77Q4

2015 REVISED STANDARD PLAN RSP A77Q4

10-7-16

© 2017 California Department of Transportation
All Rights Reserved

Dist	COUNTY	ROUTE	POST MILES TOTAL PROJECT	SHEET No.	TOTAL SHEETS
04	SCL	101,237	45.2/45.8 2.7/3.3	583	736

Randell D. Hiatt
REGISTERED CIVIL ENGINEER

January 20, 2017
PLANS APPROVAL DATE

THE STATE OF CALIFORNIA OR ITS OFFICERS OR AGENTS SHALL NOT BE RESPONSIBLE FOR THE ACCURACY OR COMPLETENESS OF SCANNED COPIES OF THIS PLAN SHEET.

REGISTERED PROFESSIONAL ENGINEER — Randell D. Hiatt — No. C50200 — Exp. 6-30-17 — CIVIL — STATE OF CALIFORNIA

TO ACCOMPANY PLANS DATED _____

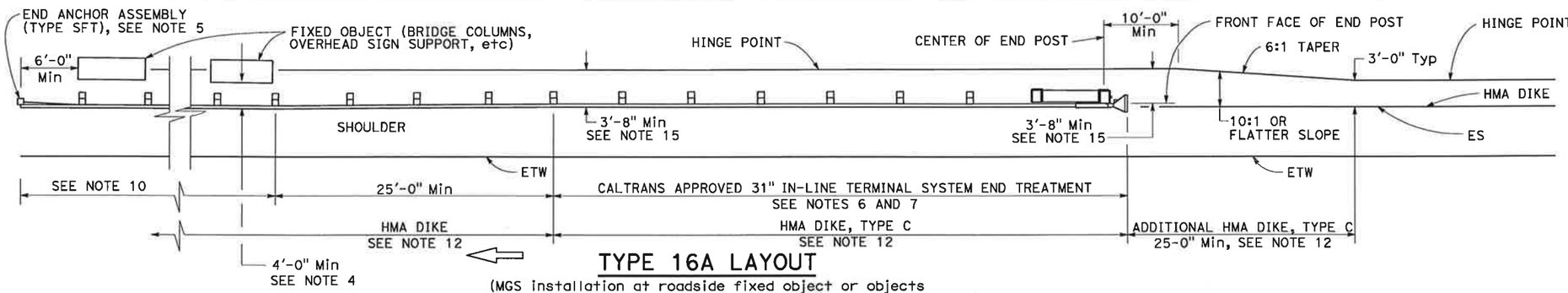

TYPE 16A LAYOUT

(MGS installation at roadside fixed object or objects with 31" in-line end treatment at traffic approach end of railing)
See Notes 11 and 12

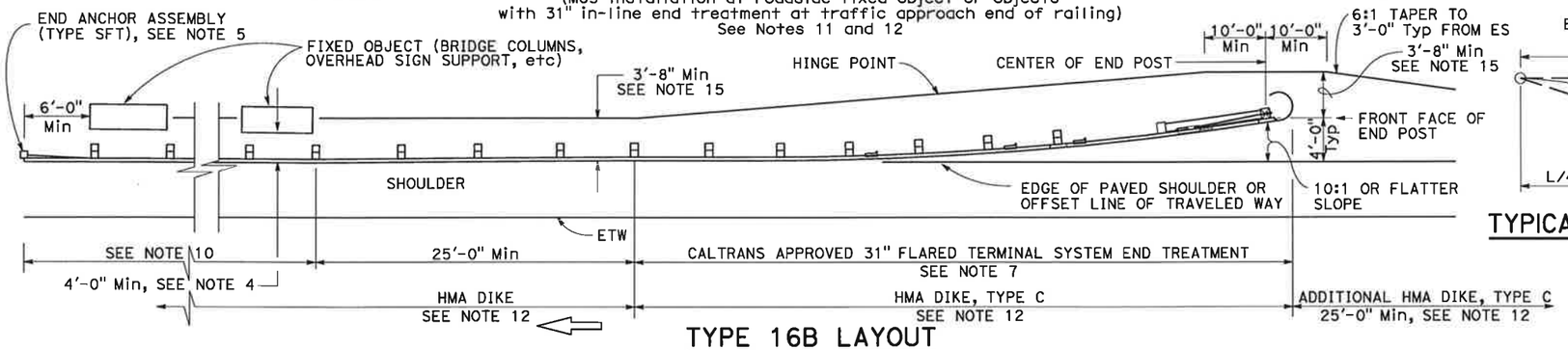

TYPE 16B LAYOUT

(MGS installation at roadside fixed object or objects with 31' flared end treatment at traffic approach end of railing)
See Notes 11 and 12

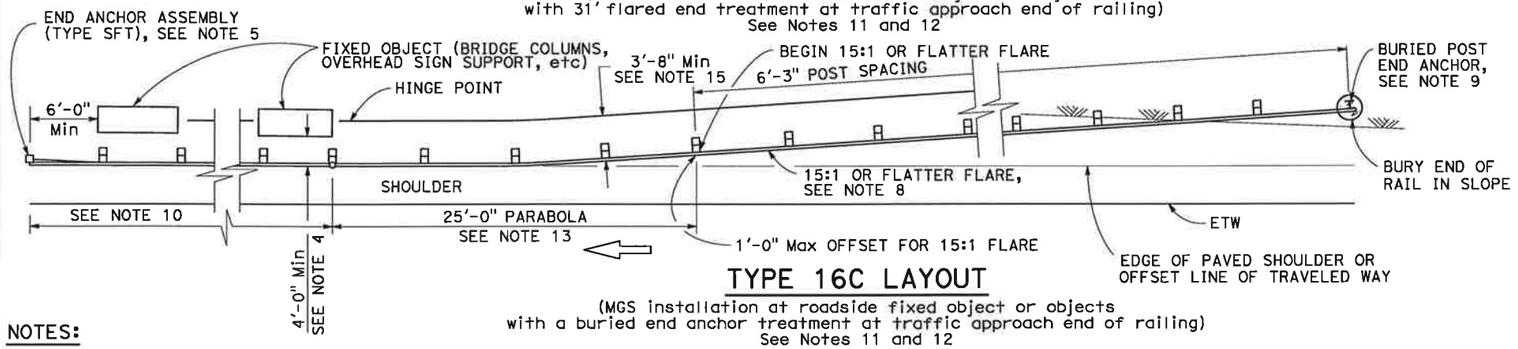

TYPE 16C LAYOUT

(MGS installation at roadside fixed object or objects with a buried end anchor treatment at traffic approach end of railing)
See Notes 11 and 12

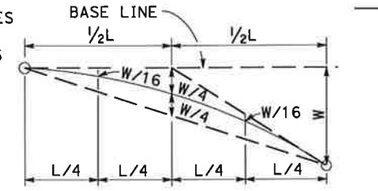

TYPICAL PARABOLIC LAYOUT

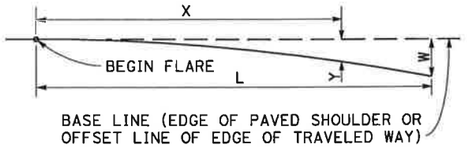

$Y = \frac{WX^2}{L^2}$

Y = OFFSET FROM BASE LINE
W = MAXIMUM OFFSET
X = DISTANCE ALONG BASE LINE
L = LENGTH OF FLARE

PARABOLIC FLARE OFFSETS

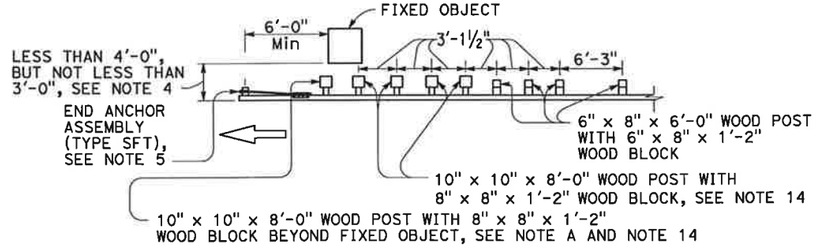

NOTE A: For a series of fixed objects (bridge columns, overhead sign supports, etc.) additional 10" x 10" x 8'-0" wood post with 8" x 8" x 1'-2" wood blocks at 3'-1½" center to center spacing are to be used between fixed objects.

STRENGTHENED MIDWEST GUARDRAIL SYSTEM SECTIONS FOR FIXED OBJECT

Use strengthened MGS sections with Types 16A, 16B or 16C layouts where minimum clearance between the face of the railing and fixed object(s) is less than 4'-0", but not less than 3'-0". See Note 4

NOTES:

1. Line post, blocks and hardware to be used are shown on Revised Standard Plans RSP A77L1, RSP A77L2, RSP A77N1, RSP A77N2 and Standard Plan A77M1.
2. MGS post spacing to be 6'-3" center to center, except as otherwise noted.
3. Except as noted, line posts are 6" x 8" x 6'-0" wood with 6" x 8" x 1'-2" wood blocks. W6 x 8.5 or W6 x 9 steel posts, 6'-0" in length, with 6" x 8" x 1'-2" notched wood blocks or notched recycled plastic blocks may be used for 6" x 8" x 6'-0" wood line posts with 6" x 8" x 1'-2" wood blocks where applicable and when specified.
4. A 4'-0" minimum clearance is required between the face of the railing and the face of a fixed object located directly behind MGS sections with post spacing of 6'-3". Construct MGS as shown in the detail "Strengthened Midwest Guardrail System Sections for Fixed Object" on this plan, where the clearance between the face of the railing and the face of a fixed object is less than 4'-0", but not less than 3'-0". Where the clearance is less than 3'-0", a concrete wall or barrier should be constructed to shield the fixed object(s).
5. For End Anchor Assembly (Type SFT) details, see Standard Plan A77S1.
6. 31" in-line terminal system end treatments are used where site conditions will not accommodate a 31" flared end treatment.
7. The type of 31" terminal system to be used will be shown on the Project Plans.
8. The 15:1 or flatter flare used with Type 16C Layout is based on the edge of the paved shoulder or offset line of edge of the traveled way. The length of MGS within the 15:1 or flatter flare is based on site conditions and should be a length equal to multiples of 12'-6".
9. For details of the Buried Post End Anchor used with Type 16C Layout, see Standard Plan A77T2.
10. As site conditions dictate, construct additional MGS to shield fixed object(s). Additional MGS length equal to multiples of 12'-6". Post spacing at 6'-3" except as specified in Note 4.
11. Layout Types 16A, 16B or 16C are typically used where MGS is recommended to shield roadside fixed object(s) and a crashworthy 31" end treatment is required for only one direction of traffic.
12. Where placement of dike is required with MGS, see Standard Plan A77N4 for dike positioning details.
13. For typical flare offsets for 25'-0" length parabola with maximum offset of 1'-0", see Revised Standard Plan RSP A77P1.
14. W6 x 15 steel post, 8'-0" in length, with 8" x 8" x 1'-2" notched wood block or notched recycled plastic blocks may be used in place of the 10" x 10" x 8'-0" wood post with 8" x 8" x 1'-2" wood block shown in the detail "Strengthened Midwest Guardrail System Sections for Fixed Object".
15. Use this offset for 8" block. For 12" block use minimum 4'-0" offset.

STATE OF CALIFORNIA
DEPARTMENT OF TRANSPORTATION

MIDWEST GUARDRAIL SYSTEM TYPICAL LAYOUTS FOR ROADSIDE FIXED OBJECTS

NO SCALE

RSP A77R3 DATED JANUARY 20, 2017 SUPERSEDES STANDARD PLAN A77R3 DATED OCTOBER 30, 2015 - PAGE 76 OF THE STANDARD PLANS BOOK DATED 2015.

REVISED STANDARD PLAN RSP A77R3

2015 REVISED STANDARD PLAN RSP A77R3

11-8-16

© 2017 California Department of Transportation
All Rights Reserved

Dist	COUNTY	ROUTE	POST MILES TOTAL PROJECT	SHEET No.	TOTAL SHEETS
04	SCL	101,237	45.2/45.8 2.7/3.3	584	736

Randell D. Hiatt
REGISTERED CIVIL ENGINEER

January 20, 2017
PLANS APPROVAL DATE

REGISTERED PROFESSIONAL ENGINEER — Randell D. Hiatt — No. C50200 — Exp. 6-30-17 — CIVIL — STATE OF CALIFORNIA

THE STATE OF CALIFORNIA OR ITS OFFICERS OR AGENTS SHALL NOT BE RESPONSIBLE FOR THE ACCURACY OR COMPLETENESS OF SCANNED COPIES OF THIS PLAN SHEET.

TO ACCOMPANY PLANS DATED _____

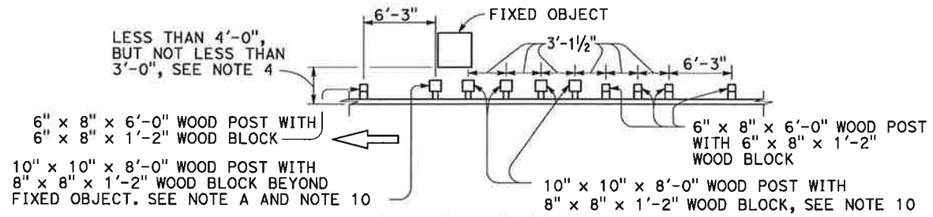

NOTE A: For a series of fixed objects (bridge columns, overhead sign supports, etc.) additional 10" x 10" x 8'-0" wood post with 8" x 8" x 1'-2" wood blocks at 3'-1½" center to center spacing are to be used between fixed object(s).

STRENGTHENED MIDWEST GUARDRAIL SYSTEM SECTIONS FOR FIXED OBJECT

Use strengthened MGS sections with layout Types 16D or 16E where minimum clearance between the face of the MGS and fixed object(s) is less than 4'-0", but not less than 3'-0". See Note 4.

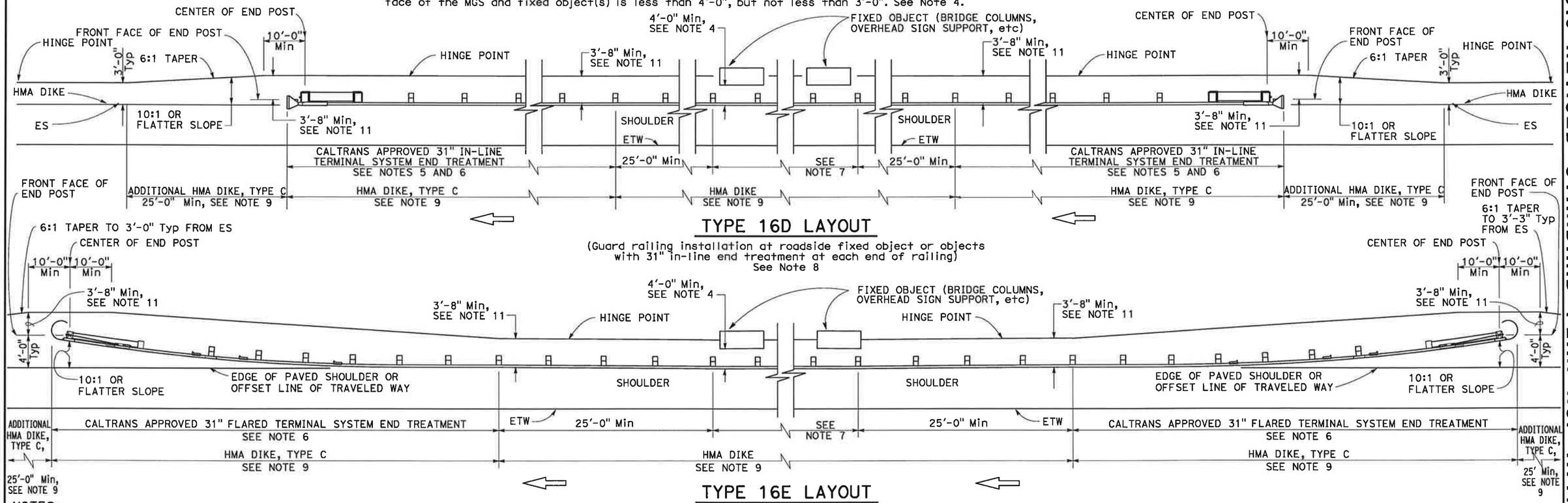

TYPE 16D LAYOUT

(Guard railing installation at roadside fixed object or objects with 31" in-line end treatment at each end of railing) See Note 8

TYPE 16E LAYOUT

(MGS installation at roadside fixed object or objects with 31" flared end treatment at each end of railing) See Note 8

NOTES:

1. Line post, blocks and hardware to be used are shown on Revised Standard Plans RSP A77L1, RSP A77L2, RSP A77N1, RSP A77N2 and Standard Plan A77M1.
2. MGS post spacing to be 6'-3" center to center, except as otherwise noted.
3. Except as noted, line posts are 6" x 8" x 6'-0" wood with 6" x 8" x 1'-2" wood blocks. W6 x 8.5 or W6 x 9 steel posts, 6'-0" in length, with 6" x 8" x 1'-2" notched wood blocks or notched recycled plastic blocks may be used for 6" x 8" x 6'-0" wood line posts with 6" x 8" x 1'-2" wood blocks where applicable and when specified.
4. A 4'-0" minimum clearance is required between the face of the railing and the face of a fixed object located directly behind MGS sections with post spacing at 6'-3". Construct MGS as shown in the detail "Strengthened Midwest Guardrail System Sections for Fixed Object". on this plan, where the clearance between the face of the railing and the face of a fixed object is less than 4'-0", but not less than 3'-0". Where the clearance is less than 3'-0", a concrete wall or barrier should be constructed to shield the fixed object(s).
5. 31" in-line terminal system end treatments are used where site conditions will not accommodate a 31" flared end treatment.
6. The type of 31" terminal system to be used will be shown on the Project Plans.
7. As site conditions dictate, construct additional MGS to shield fixed object(s). Additional MGS length equal to multiples of 12'-6". Post spacing at 6'-3", except as specified in Note 4.
8. Layout Types 16D through 16L, shown on the A77R Series of Standard Plans, are typically used where MGS is recommended to shield roadside fixed object(s) and a crashworthy 31" end treatment is required for both directions of traffic.
9. Where placement of dike is required with MGS, see Standard Plan A77N4 for dike positioning details.
10. W6 x 15 steel post, 8'-0" in length, with 8" x 8" x 1'-2" notched wood block or notched recycled plastic block may be used in place of the 10" x 10" x 8'-0" wood post with 8" x 8" x 1'-2" wood block shown in the detail "Strengthened Midwest Guardrail System Sections for Fixed Object".
11. Use this offset for 8" block. For 12" block use minimum 4'-0" offset.

STATE OF CALIFORNIA
DEPARTMENT OF TRANSPORTATION

MIDWEST GUARDRAIL SYSTEM TYPICAL LAYOUTS FOR ROADSIDE FIXED OBJECTS

NO SCALE

RSP A77R4 DATED JANUARY 20, 2017 SUPERSEDES STANDARD PLAN A77R4
DATED OCTOBER 30, 2015 - PAGE 77 OF THE STANDARD PLANS BOOK DATED 2015.

REVISED STANDARD PLAN RSP A77R4

9-22-16

2015 REVISED STANDARD PLAN RSP A77R4

© 2017 California Department of Transportation
All Rights Reserved

Dist	COUNTY	ROUTE	POST MILES TOTAL PROJECT	SHEET No.	TOTAL SHEETS
04	SCL	101,237	45.2/45.8 2.7/3.3	585	736

Randell D. Hiatt
REGISTERED CIVIL ENGINEER

January 20, 2017
PLANS APPROVAL DATE

REGISTERED PROFESSIONAL ENGINEER — Randell D. Hiatt No. C50200 Exp. 6-30-17 CIVIL — STATE OF CALIFORNIA

THE STATE OF CALIFORNIA OR ITS OFFICERS OR AGENTS SHALL NOT BE RESPONSIBLE FOR THE ACCURACY OR COMPLETENESS OF SCANNED COPIES OF THIS PLAN SHEET.

TO ACCOMPANY PLANS DATED _____

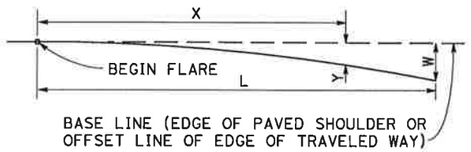

$Y = \frac{WX^2}{L^2}$

Y = OFFSET FROM BASE LINE
W = MAXIMUM OFFSET
X = DISTANCE ALONG BASE LINE
L = LENGTH OF FLARE

PARABOLIC FLARE OFFSETS

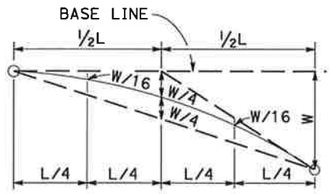

TYPICAL PARABOLIC LAYOUT

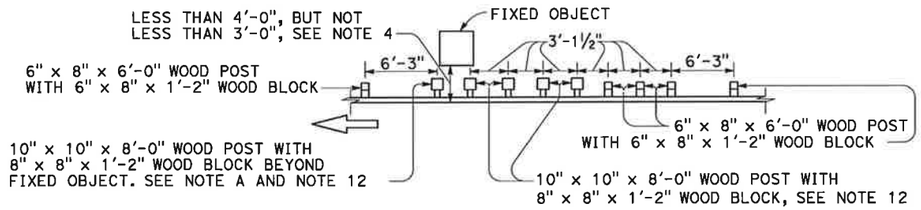

NOTE A: For a series of fixed objects (bridge columns, overhead sign supports, etc) additional 10" x 10" x 8'-0" wood post with 8" x 8" x 1'-2" wood blocks at 3'-1½" center to center spacing are to be used between fixed object(s).

STRENGTHENED MIDWEST GUARDRAIL SYSTEM SECTIONS FOR FIXED OBJECT

Use strengthened MGS sections with layout Types 16F or 16G where minimum clearance between the face of the MGS and fixed object(s) is less than 4'-0", but not less than 3'-0". See Note 4.

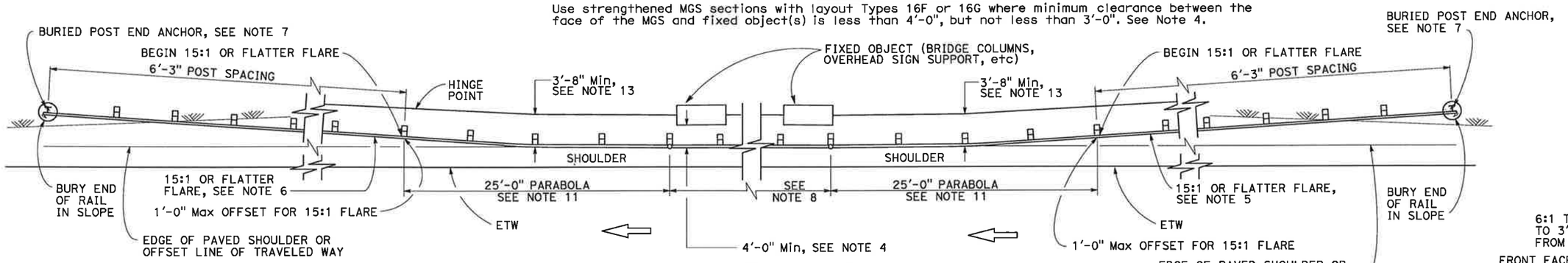

TYPE 16F LAYOUT

(MGS installation at roadside fixed object or objects With a buried end anchor treatment at each end of railing) See Notes 9 and 10

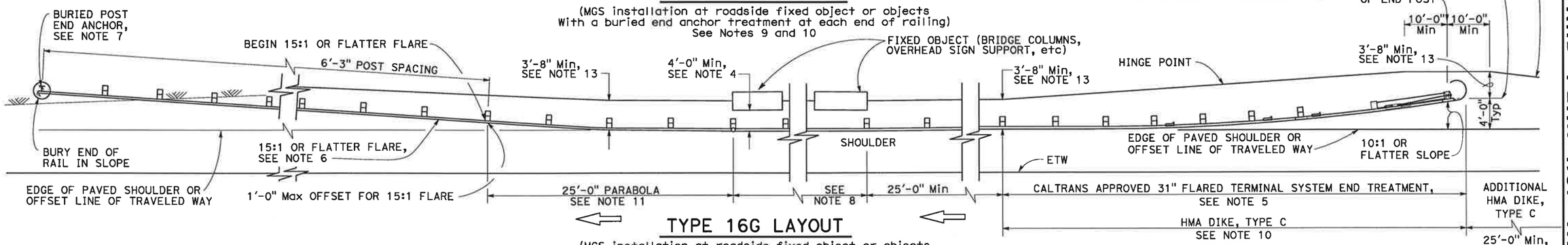

TYPE 16G LAYOUT

(MGS installation at roadside fixed object or objects with 31" flared end treatment and a buried end anchor treatment at the ends of railing) See Notes 9 and 10

NOTES:

1. Line post, blocks and hardware to be used are shown on Revised Standard Plans RSP A77L1, RSP A77L2, RSP A77N1, RSP A77N2 and Standard Plan A77M1.
2. MGS post spacing to be 6'-3" center to center, except as otherwise noted.
3. Except as noted, line posts are 6" x 8" x 6'-0" wood with 6" x 8" x 1'-2" wood blocks. W6 x 8.5 or W6 x 9 steel posts, 6'-0" in length, with 8" x 8" x 1'-2" notched wood blocks or notched recycled plastic blocks may be used for 6" x 8" x 6'-0" wood posts with 6" x 8" x 1'-2" wood blocks where applicable and when specified.
4. A 4'-0" minimum clearance is required between the face of the railing and the face of a fixed object located directly behind MGS sections with post spacing at 6'-3". Construct MGS as shown in the detail "Strengthened Midwest Guardrail System Sections for Fixed Objects" on this plan, where the clearance between the face of the railing and the face of a fixed object is less than 4'-0", but not less than 3'-0". Where the clearance is less than 3'-0", a concrete wall or barrier should be constructed to shield the fixed object(s).
5. The type of 31" terminal system to be used will be shown on the Project Plans.
6. The 15:1 or flatter flare for the buried post anchor is based on the edge of the paved shoulder or offset line of edge of the traveled way. The length of MGS within the 15:1 or flatter flare is based on site conditions and should be a length equal to multiples of 12'-6".
7. For details of the Buried Post End Anchor, see Standard Plan A77T2.
8. As site conditions dictate, construct additional MGS to shield fixed object(s). Additional MGS length equal to multiples of 12'-6". Post spacing at 6'-3", except as specified in Note 4.
9. Layout Types 16D through 16L, shown on the A77R Series of Standard Plans, are typically used on highways where MGS is recommended to shield roadside fixed object(s) and a crashworthy 31" end treatment is required for both directions of traffic.
10. Where placement of dike is required with MGS, see Standard Plan A77N4 for dike positioning details.
11. For typical flare offsets for 25'-0" length parabola with maximum offset of 1'-0", see RevisedStandard Plan RSP A77P1.
12. W6 x 15 steel post, 8'-0" in length, with 8" x 8" x 1'-2" notched wood block or notched recycled plastic blocks may be used in place of the 10" x 10" x 8'-0" wood post with 8" x 8" x 1'-2" wood block shown in the detail "Strengthened Midwest Guardrail System Sections for Fixed Object".
13. Use this offset for 8" block. For 12" block use minimum 4'-0" offset.

STATE OF CALIFORNIA
DEPARTMENT OF TRANSPORTATION

MIDWEST GUARDRAIL SYSTEM TYPICAL LAYOUTS FOR ROADSIDE FIXED OBJECTS

NO SCALE

RSP A77R5 DATED JANUARY 20, 2017 SUPERSEDES STANDARD PLAN A77R5 DATED OCTOBER 30, 2015 - PAGE 78 OF THE STANDARD PLANS BOOK DATED 2015.

REVISED STANDARD PLAN RSP A77R5

2015 REVISED STANDARD PLAN RSP A77R5

9-22-16

© 2017 California Department of Transportation
All Rights Reserved

Dist	COUNTY	ROUTE	POST MILES TOTAL PROJECT	SHEET No.	TOTAL SHEETS
04	SCL	101,237	45.2/45.8 2.7/3.3	586	736

Randell D. Hiatt
REGISTERED CIVIL ENGINEER

January 20, 2017
PLANS APPROVAL DATE

REGISTERED PROFESSIONAL ENGINEER — Randell D. Hiatt — No. C50200 — Exp. 6-30-17 — CIVIL — STATE OF CALIFORNIA

THE STATE OF CALIFORNIA OR ITS OFFICERS OR AGENTS SHALL NOT BE RESPONSIBLE FOR THE ACCURACY OR COMPLETENESS OF SCANNED COPIES OF THIS PLAN SHEET.

TO ACCOMPANY PLANS DATED _____

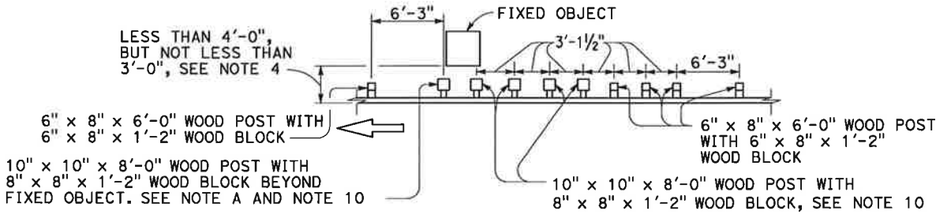

NOTE A: For a series of fixed objects (bridge columns, overhead sign supports, etc.) additional 10" x 10" x 8'-0" wood post with 8" x 8" x 1'-2" wood blocks at 3'-1½" center to center spacing are to be used between fixed object(s).

STRENGTHENED MIDWEST GUARDRAIL SYSTEM SECTIONS FOR FIXED OBJECT

Use strengthened MGS sections with layout Type 16H where minimum clearance between the face of the MGS and fixed object(s) is less than 4'-0", but not less than 3'-0". See Note 4.

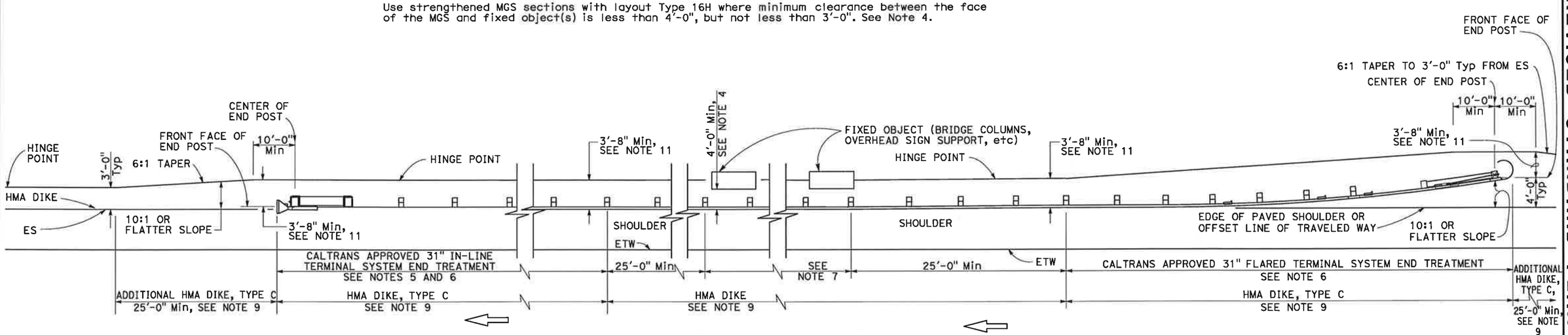

TYPE 16H LAYOUT

(MGS installation at roadside fixed object or objects with 31" flared end treatment and 31" in-line end treatment at the ends of railing)
See Note 8

NOTES:

1. Line post, blocks and hardware to be used are shown on Revised Standard Plans RSP A77L1, RSP A77L2, RSP A77N1, RSP A77N2 and Standard Plan A77M1.
2. MGS post spacing to be 6'-3" center to center, except as otherwise noted.
3. Except as noted, line posts are 6" x 8" x 6'-0" wood with 6" x 8" x 1'-2" wood blocks. W6 x 8.5 or W6 x 9 steel posts, 6'-0" in length, with 6" x 8" x 1'-2" notched wood blocks or notched recycled plastic blocks may be used for 6" x 8" x 6'-0" wood posts with 6" x 8" x 1'-2" wood blocks where applicable and when specified.
4. A 4'-0" minimum clearance is required between the face of the railing and the face of a fixed object located directly behind MGS sections with post spacing at 6'-3". Construct MGS as shown in the detail "Strengthened Midwest Guardrail System Sections for Fixed Objects" on this plan, where the clearance between the face of the railing and the face of a fixed object is less than 4'-0", but not less than 3'-0". Where the clearance is less than 3'-0", a concrete wall or barrier should be constructed to shield the fixed object(s).
5. 31" in-line terminal system end treatments are used where site conditions will not accommodate a 31" flared end treatment.
6. The type of 31" terminal system to be used will be shown on the Project Plans.
7. As site conditions dictate, construct additional MGS to shield fixed object(s). Additional MGS length equal to multiples of 12'-6". Post spacing at 6'-3", except as specified in Note 4.
8. Layout Types 16D through 16L, shown on the A77R Series of Standard PLans, typically used where MGS is recommended to shield roadside fixed object(s) and a crashworthy 31" end treatment is required for both directions of traffic.
9. Where placement of dike is required with MGS, see Standard Plan A77N4 for dike positioning details.
10. W6 x 15 steel post, 8'-0" in length, with 8" x 8" x 1'-2" notched wood block or notched recycled plastic blocks may be used in place of the 10" x 10" x 8'-0" wood post with 8" x 8" x 1'-2" wood block shown in the detail "Strengthened Midwest Guardrail System Sections for Fixed Object".
11. Use this offset for 8" block. For 12" block use minimum 4'-0" offset.

STATE OF CALIFORNIA
DEPARTMENT OF TRANSPORTATION

MIDWEST GUARDRAIL SYSTEM TYPICAL LAYOUTS FOR ROADSIDE FIXED OBJECTS

NO SCALE

RSP A77R6 DATED JANUARY 20, 2017 SUPERSEDES STANDARD PLAN A77R6 DATED OCTOBER 30, 2015 - PAGE 79 OF THE STANDARD PLANS BOOK DATED 2015.

REVISED STANDARD PLAN RSP A77R6

2015 REVISED STANDARD PLAN RSP A77R6

9-22-16

© 2017 California Department of Transportation
All Rights Reserved

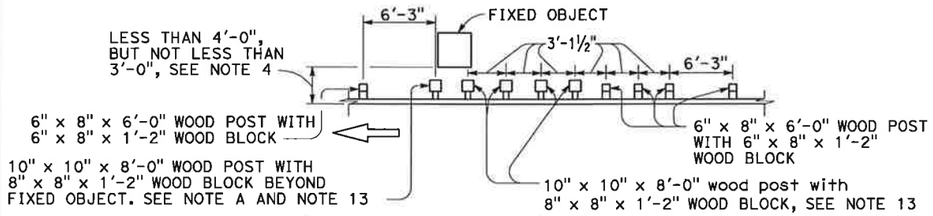

NOTE A: For a series of fixed objects (bridge columns, overhead sign supports, etc.) additional 10" x 10" x 8'-0" wood post with 8" x 8" x 1'-2" wood blocks at 3'-1½" center to center spacing are to be used between fixed object(s).

STRENGTHENED MIDWEST GUARDRAIL SYSTEM SECTIONS FOR FIXED OBJECT

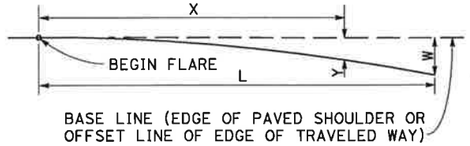

$$Y = \frac{WX^2}{L^2}$$

Y = OFFSET FROM BASE LINE
W = MAXIMUM OFFSET
X = DISTANCE ALONG BASE LINE
L = LENGTH OF FLARE

PARABOLIC FLARE OFFSETS

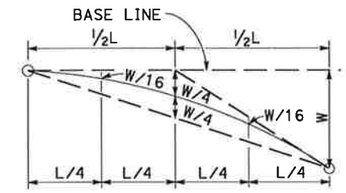

TYPICAL PARABOLIC LAYOUT

Dist	COUNTY	ROUTE	POST MILES TOTAL PROJECT	SHEET No.	TOTAL SHEETS
04	SCL	101,237	45.2/45.8 2.7/3.3	587	736

Randell D. Hiatt
REGISTERED CIVIL ENGINEER

January 20, 2017
PLANS APPROVAL DATE

REGISTERED PROFESSIONAL ENGINEER — Randell D. Hiatt — No. C50200 — Exp. 6-30-17 CIVIL — STATE OF CALIFORNIA

THE STATE OF CALIFORNIA OR ITS OFFICERS OR AGENTS SHALL NOT BE RESPONSIBLE FOR THE ACCURACY OR COMPLETENESS OF SCANNED COPIES OF THIS PLAN SHEET.

TO ACCOMPANY PLANS DATED _____

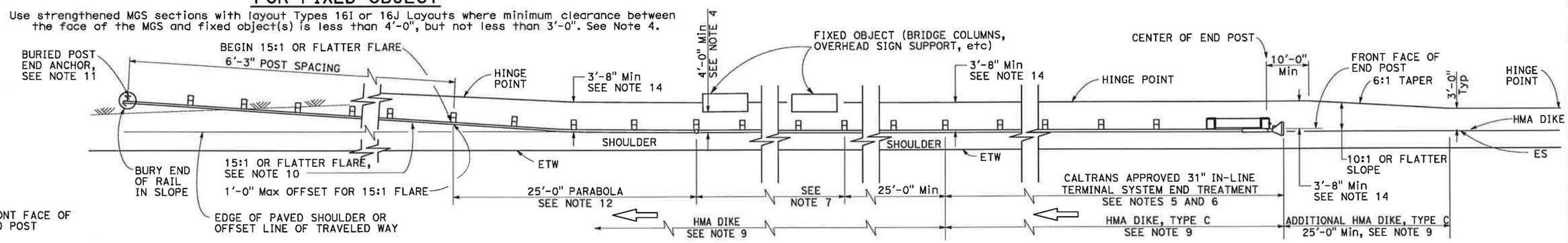

TYPE 16I LAYOUT

(MGS installation at roadside fixed object or objects with 31" in-line end treatment and a buried end anchor treatment at the ends of railing) See Note 8

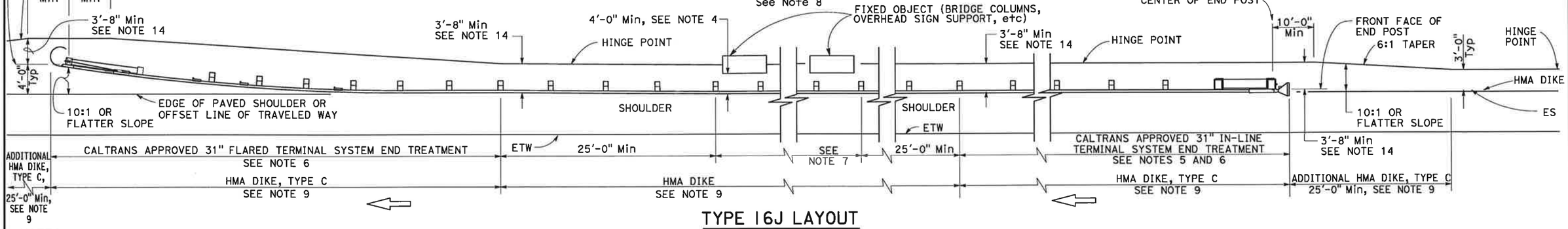

TYPE 16J LAYOUT

(MGS installation at roadside fixed object or objects with a 31" in-line end treatment and a 31" flared end treatment at the ends of railing) See Note 8

NOTES:

1. Line post, blocks and hardware to be used are shown on Revised Standard Plans RSP A77L1, RSP A77L2, RSP A77N1, RSP A77N2 and Standard Plan A77M1.
2. MGS post spacing to be 6'-3" center to center, except as otherwise noted.
3. Except as noted, line posts are 6" x 8" x 6'-0" wood with 6" x 8" x 1'-2" wood blocks. W6 x 8.5 or W6 x 9 steel posts, 6'-0" in length, with 6" x 8" x 1'-2" notched wood blocks or notched recycled plastic blocks may be used for 6" x 8" x 6'-0" wood posts with 6" x 8" x 1'-2" wood blocks where applicable and when specified.
4. A 4'-0" minimum clearance is required between the face of the railing and the face of a fixed object located directly behind MGS sections with post spacing at 6'-3". Construct MGS as shown in the detail "Strengthened Midwest Guardrail System Sections for Fixed Objects" on this plan, where the clearance between the face of the railing and the face of a fixed object is less than 4'-0", but not less than 3'-0". Where the clearance is less than 3'-0", a concrete wall or barrier should be constructed to shield the fixed object(s).
5. 31" in-line terminal system end treatments are used where site conditions will not accommodate a 31" flared end treatment.
6. The type of 31" terminal system to be used will be shown on the Project Plans.
7. As site conditions dictate, construct additional MGS to shield fixed object(s). Additional MGS length equal to multiples of 12'-6". Post spacing at 6'-3", except as specified in Note 4.
8. Layout Types 16D through 16L, shown on the A77R Series of Standard Plans, are typically used where MGS is recommended to shield roadside fixed object(s) and a crashworthy 31" end treatment is required for both directions of traffic.
9. Where placement of dike is required with guard railing, see Standard Plan A77N4 for dike positioning details.
10. The 15:1 or flatter flare for the buried post anchor is based on the edge of the paved shoulder or offset line of edge of the traveled way. The length of MGS within the 15:1 or flatter flare is based on site conditions and should be a length equal to multiples of 12'-6".
11. For details of Buried Post End Anchor, see Standard Plan A77T2.
12. For typical flare offsets for 25'-0" length parabola with maximum offset of 1'-0", see Revised Standard Plan RSP A77P1.
13. W6 x 15 steel post, 8'-0" in length, with 8" x 8" x 1'-2" notched wood block or notched recycled plastic blocks may be used in place of the 10" x 10" x 8'-0" wood post with 8" x 8" x 1'-2" wood block shown in the detail "Strengthened Midwest Guardrail System Sections for Fixed Object".
14. Use this offset for 8" block. For 12" block use minimum 4'-0" offset.

STATE OF CALIFORNIA
DEPARTMENT OF TRANSPORTATION

MIDWEST GUARDRAIL SYSTEM TYPICAL LAYOUTS FOR ROADSIDE FIXED OBJECTS

NO SCALE

RSP A77R7 DATED JANUARY 20, 2017 SUPERSEDES STANDARD PLAN A77R7 DATED OCTOBER 30, 2015 - PAGE 80 OF THE STANDARD PLANS BOOK DATED 2015.

REVISED STANDARD PLAN RSP A77R7

9-22-16

2015 REVISED STANDARD PLAN RSP A77R7

© 2017 California Department of Transportation
All Rights Reserved

Dist	COUNTY	ROUTE	POST MILES TOTAL PROJECT	SHEET No.	TOTAL SHEETS
04	SCL	101,237	45.2/45.8 2.7/3.3	588	736

Randell D. Hiatt
REGISTERED CIVIL ENGINEER

January 20, 2017
PLANS APPROVAL DATE

THE STATE OF CALIFORNIA OR ITS OFFICERS OR AGENTS SHALL NOT BE RESPONSIBLE FOR THE ACCURACY OR COMPLETENESS OF SCANNED COPIES OF THIS PLAN SHEET.

REGISTERED PROFESSIONAL ENGINEER — Randell D. Hiatt — No. C50200 — Exp. 6-30-17 — CIVIL — STATE OF CALIFORNIA

TO ACCOMPANY PLANS DATED _____

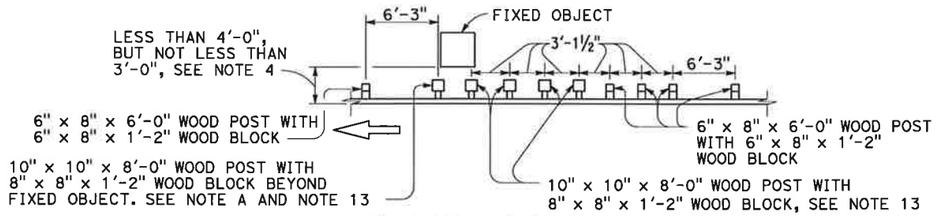

NOTE A: For a series of fixed objects (bridge columns, overhead sign supports, etc.) additional 10" x 10" x 8'-0" wood post with 8" x 8" x 1'-2" wood blocks at 3'-1½" center to center spacing are to be used between fixed object(s).

STRENGTHENED MIDWEST GUARDRAIL SYSTEM SECTIONS FOR FIXED OBJECT

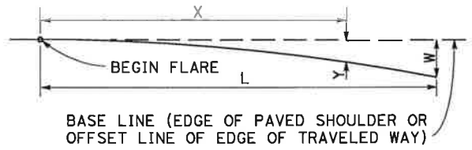

$Y = \frac{WX^2}{L^2}$

Y = OFFSET FROM BASE LINE
W = MAXIMUM OFFSET
X = DISTANCE ALONG BASE LINE
L = LENGTH OF FLARE

PARABOLIC FLARE OFFSETS

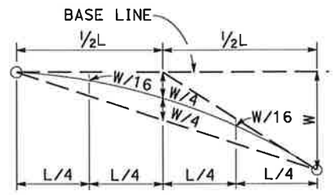

TYPICAL PARABOLIC LAYOUT

Use strengthened MGS sections with layout Types 16K or 16L layouts where minimum clearance between the face of the MGS and fixed object(s) is less than 4'-0", but not less than 3'-0". See Note 4.

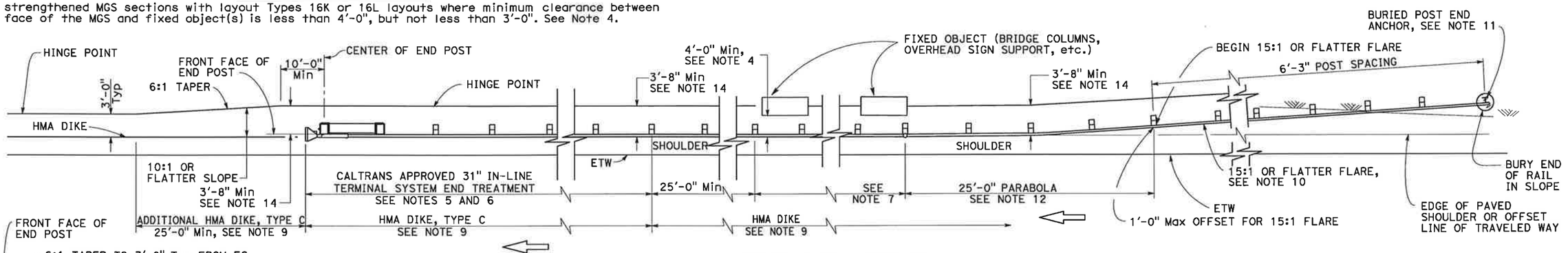

TYPE 16K LAYOUT

(MGS installation at roadside fixed object or objects with a buried end anchor treatment and a 31" in-line end treatment at the ends of railing) See Note 8

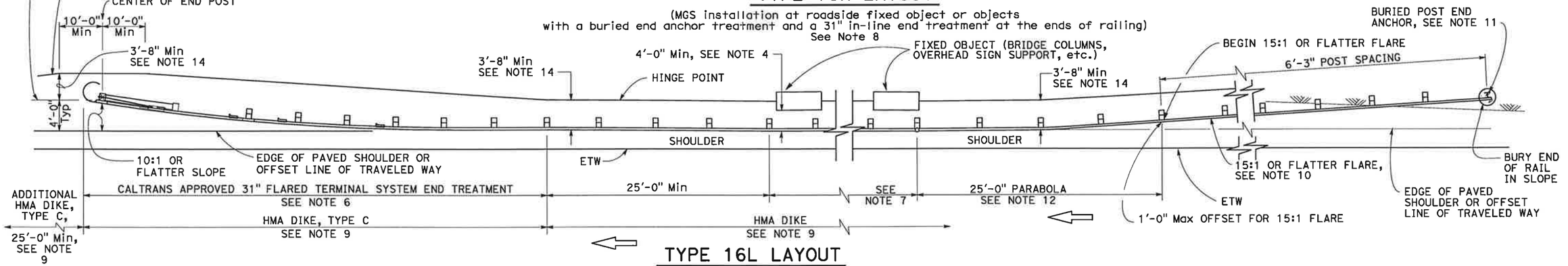

TYPE 16L LAYOUT

(MGS installation at roadside fixed object or objects with a buried end anchor treatment and a 31" flared end treatment at the ends of railing) See Note 8

NOTES:

1. Line post, blocks and hardware to be used are shown on Revised Standard Plans RSP A77L1, RSP A77L2, RSP A77N1, RSP A77N2 and Standard Plan A77M1.
2. MGS post spacing to be 6'-3" center to center, except as otherwise noted.
3. Except as noted, line posts are 6" x 8" x 6'-0" wood with 6" x 8" x 1'-2" wood blocks. W6 x 8.5 or W6 x 9 steel posts, 6'-0" in length, with 6" x 8" x 1'-2" notched wood blocks or notched recycled plastic blocks may be used for 6" x 8" x 6'-0" wood posts with 6" x 8" x 1'-2" wood blocks where applicable and when specified.
4. A 4'-0" minimum clearance is required between the face of the railing and the face of a fixed object located directly behind MGS sections with post spacing at 6'-3". Construct MGS as shown in the detail "Strengthened Midwest Guardrail System Sections for Fixed Objects" on this plan, where the clearance between the face of the railing and the face of a fixed object is less than 4'-0", but not less than 3'-0". Where the clearance is less than 3'-0", a concrete wall or barrier should be constructed to shield the fixed object(s).
5. 31" in-line terminal system end treatments are used where site conditions will not accommodate a 31" flared end treatment.
6. The type of 31" terminal system to be used will be shown on the Project Plans.
7. As site conditions dictate, construct additional MGS to shield fixed object(s). Additional MGS length equal to multiples of 12'-6". Post spacing at 6'-3", except as specified in Note 4.
8. Layout Types 16D through 16L, shown on the A77R Series of Standard Plans are typically used where MGS is recommended to shield roadside fixed object(s) and a crashworthy 31" end treatment is required for both directions of traffic.
9. Where placement of dike is required with MGS, see Standard Plan A77N4 for dike positioning details.
10. The 15:1 or flatter flare for the buried post anchor is based on the edge of the paved shoulder or offset line of edge of the traveled way. The length of MGS within the 15:1 or flatter flare is based on site conditions and should be a length equal to multiples of 12'-6".
11. For details of Buried Post End Anchor, see Standard Plan A77T2.
12. For typical flare offsets for 25'-0" length parabola with maximum offset of 1'-0", see Revised Standard Plan RSP A77P1.
13. W6 x 15 steel post, 8'-0" in length, with 8" x 8" x 1'-2" notched wood block or notched recycled plastic blocks may be used in place of the 10" x 10" x 8'-0" wood post with 8" x 8" x 1'-2" wood block shown in the detail "Strengthened Midwest Guardrail System Sections for Fixed Object".
14. Use this offset for 8" block. For 12" block use minimum 4'-0" offset.

STATE OF CALIFORNIA
DEPARTMENT OF TRANSPORTATION

MIDWEST GUARDRAIL SYSTEM TYPICAL LAYOUTS FOR ROADSIDE FIXED OBJECTS

NO SCALE

RSP A77R8 DATED JANUARY 20, 2017 SUPERSEDES STANDARD PLAN A77R8 DATED OCTOBER 30, 2015 - PAGE 81 OF THE STANDARD PLANS BOOK DATED 2015.

REVISED STANDARD PLAN RSP A77R8

2015 REVISED STANDARD PLAN RSP A77R8

9-22-16

© 2018 California Department of Transportation
All Rights Reserved

Dist	COUNTY	ROUTE	POST MILES TOTAL PROJECT	SHEET No.	TOTAL SHEETS
04	SCL	101 237	45.2/45.8 2.7/3.3	589	736

Randell D. Hiatt
REGISTERED CIVIL ENGINEER

April 20, 2018
PLANS APPROVAL DATE

REGISTERED PROFESSIONAL ENGINEER — Randell D. Hiatt — No. C50200 — Exp. 6-30-19 — CIVIL — STATE OF CALIFORNIA

THE STATE OF CALIFORNIA OR ITS OFFICERS OR AGENTS SHALL NOT BE RESPONSIBLE FOR THE ACCURACY OR COMPLETENESS OF SCANNED COPIES OF THIS PLAN SHEET.

TO ACCOMPANY PLANS DATED _____

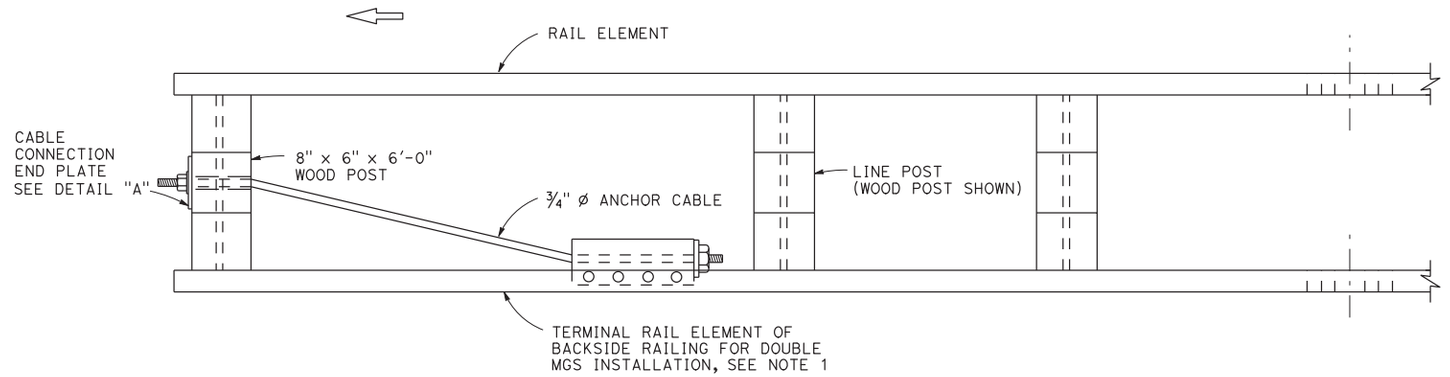

PLAN

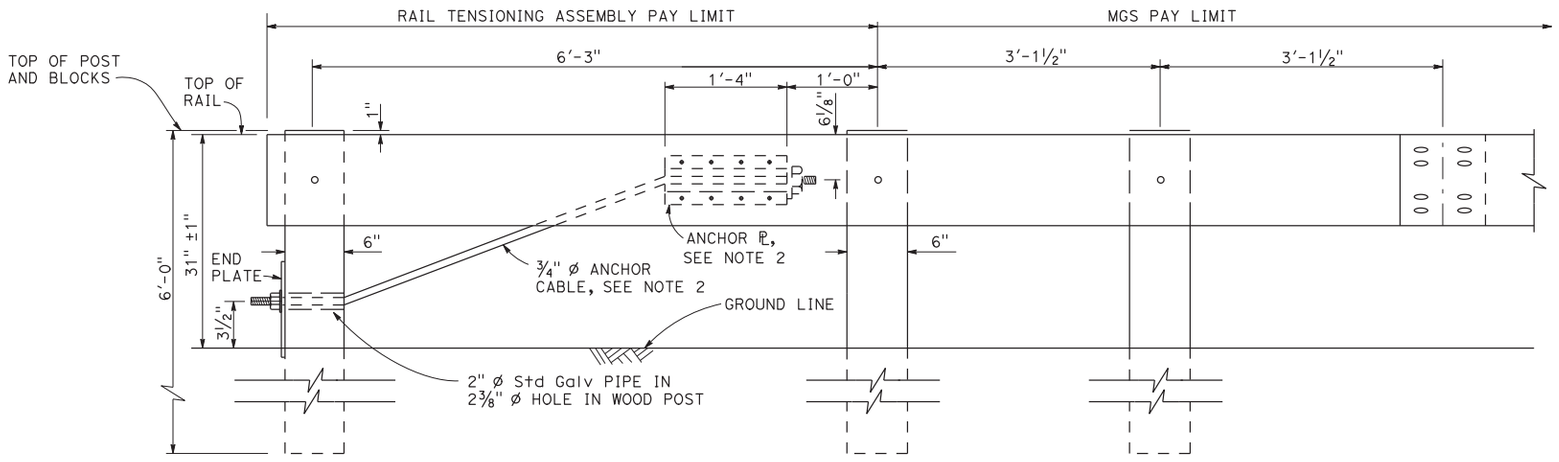

ELEVATION
RAIL TENSIONING ASSEMBLY
See Note 1

NOTES:

1. See Standard Plans A77Q3 and A77R1 for typical use of rail tensioning assembly.
2. For details of the anchor plate and ¾" cable, see Standard Plan A77S3.

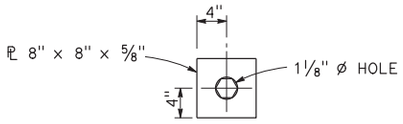

DETAIL "A"
CABLE CONNECTION END PLATE

STATE OF CALIFORNIA
DEPARTMENT OF TRANSPORTATION

MIDWEST GUARDRAIL SYSTEM
RAIL TENSIONING ASSEMBLY

NO SCALE

RSP A77S2 DATED APRIL 20, 2018 SUPERSEDES STANDARD PLAN A77S2
DATED OCTOBER 30, 2015 - PAGE 83 OF THE STANDARD PLANS BOOK DATED 2015.

REVISED STANDARD PLAN RSP A77S2

2015 REVISED STANDARD PLAN RSP A77S2

1-17-18

© 2017 California Department of Transportation
All Rights Reserved

Dist	COUNTY	ROUTE	POST MILES TOTAL PROJECT	SHEET No.	TOTAL SHEETS
04	SCL	101,237	45.2/45.8 2.7/3.3	590	736

Randell D. Hiatt
REGISTERED CIVIL ENGINEER

January 20, 2017
PLANS APPROVAL DATE

REGISTERED PROFESSIONAL ENGINEER
Randell D. Hiatt
No. C50200
Exp. 6-30-17
CIVIL
STATE OF CALIFORNIA

THE STATE OF CALIFORNIA OR ITS OFFICERS OR AGENTS SHALL NOT BE RESPONSIBLE FOR THE ACCURACY OR COMPLETENESS OF SCANNED COPIES OF THIS PLAN SHEET.

TO ACCOMPANY PLANS DATED _____

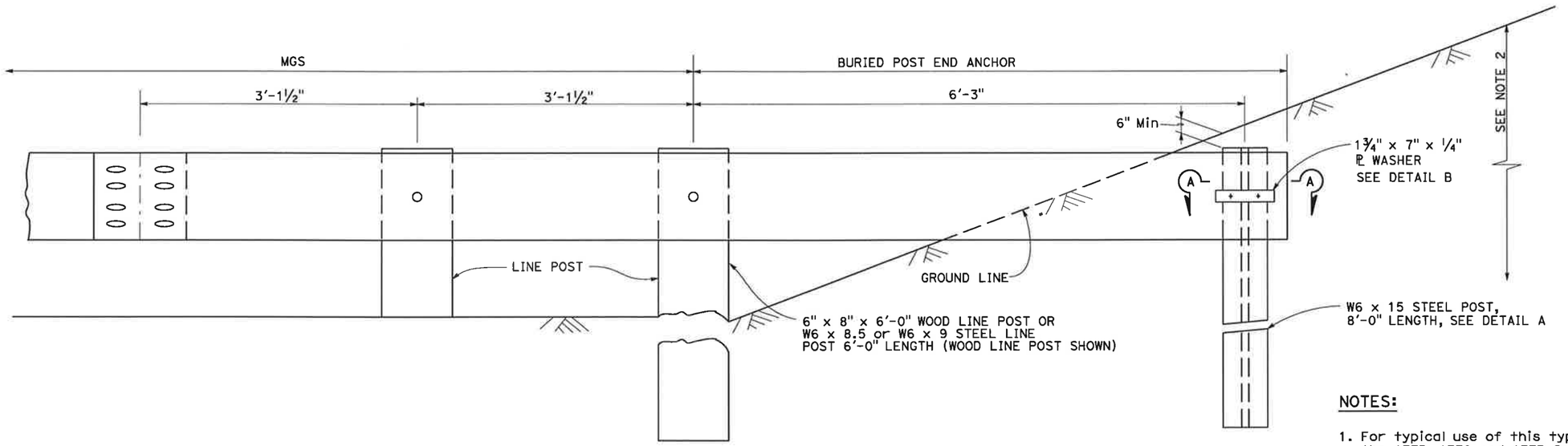

BURIED POST END ANCHOR

See Note 2

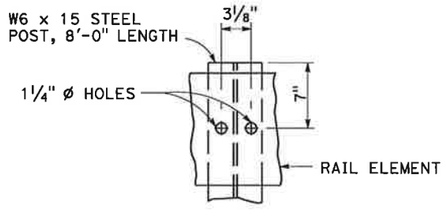

DETAIL A

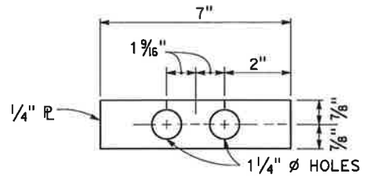

DETAIL B

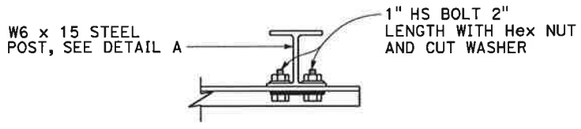

SECTION A-A

NOTES:

1. For typical use of this type of end anchor with MGS see the A77P, A77Q and A77R Series of the Standard Plans.
2. The buried post end anchor shall only be constructed at those locations where the slope perpendicular to the roadway is non-traversable.

STATE OF CALIFORNIA
DEPARTMENT OF TRANSPORTATION

MIDWEST GUARDRAIL SYSTEM
BURIED POST END ANCHOR

NO SCALE

RSP A77T2 DATED JANUARY 20, 2017 SUPERSEDES STANDARD PLAN A77T2
DATED OCTOBER 30, 2015 - PAGE 86 OF THE STANDARD PLANS BOOK DATED 2015.

REVISED STANDARD PLAN RSP A77T2

2015 REVISED STANDARD PLAN RSP A77T2

11-17-16

© 2017 California Department of Transportation
All Rights Reserved

Dist	COUNTY	ROUTE	POST MILES TOTAL PROJECT	SHEET No.	TOTAL SHEETS
04	SCL	101,237	45.2/45.8 2.7/3.3	591	736

B. Valizadeh
REGISTERED CIVIL ENGINEER

July 21, 2017
PLANS APPROVAL DATE

M. Reza Valizadeh No. C51902 Exp. 6-30-18 CIVIL — REGISTERED PROFESSIONAL ENGINEER — STATE OF CALIFORNIA

THE STATE OF CALIFORNIA OR ITS OFFICERS OR AGENTS SHALL NOT BE RESPONSIBLE FOR THE ACCURACY OR COMPLETENESS OF SCANNED COPIES OF THIS PLAN SHEET.

TO ACCOMPANY PLANS DATED _____

2015 REVISED STANDARD PLAN RSP A85

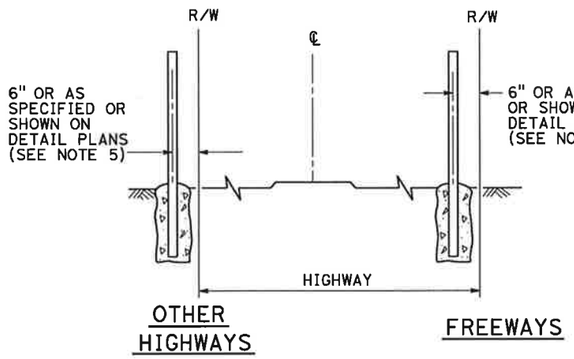

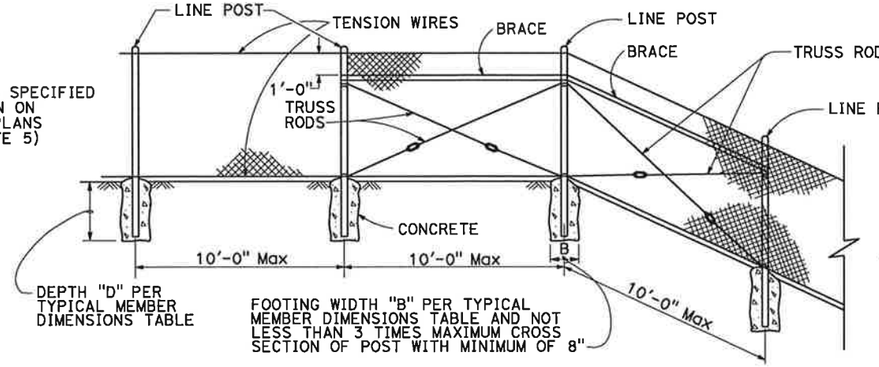

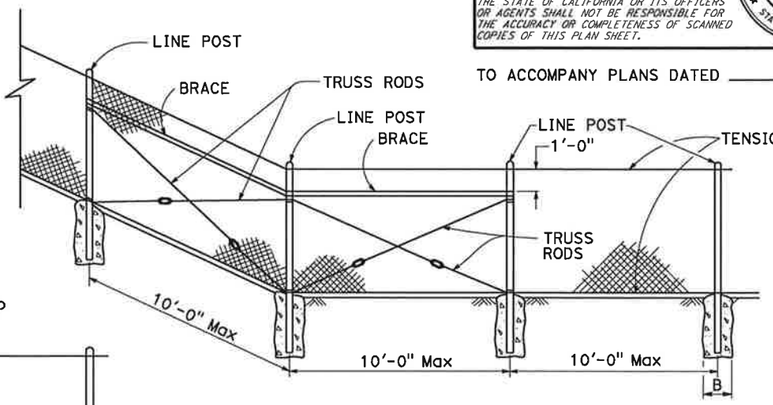

FENCE LOCATION

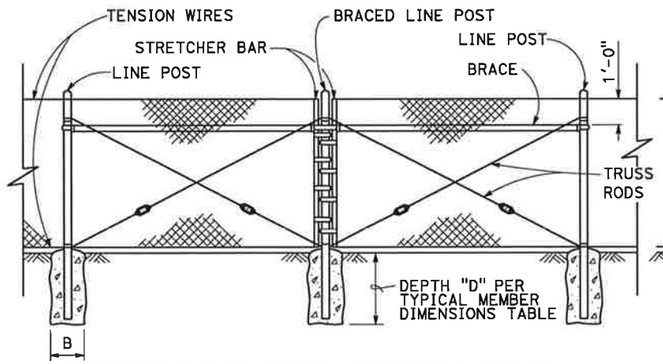

CHAIN LINK FENCE ON SHARP BREAK IN GRADE

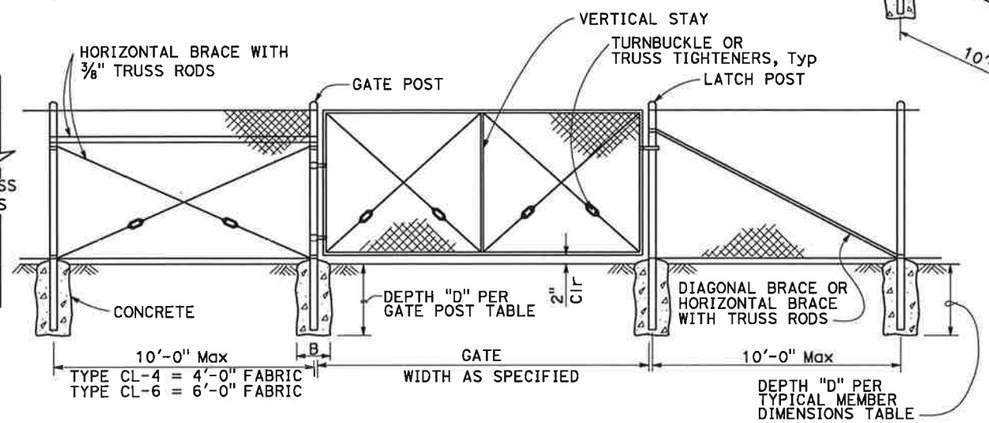

BRACED LINE POST INSTALLATION

Braced line post at intervals not exceeding 1000'

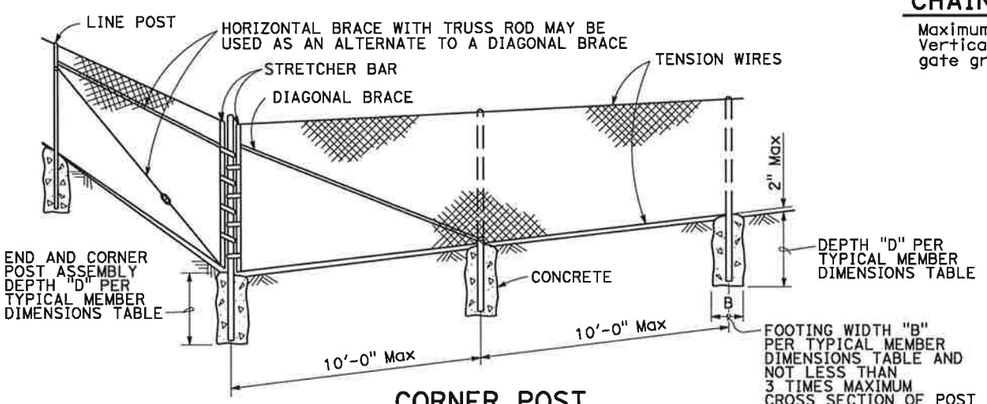

CORNER POST

CHAIN LINK GATE INSTALLATION

Maximum Gate Width is 12'-0"
Vertical Stay is required in middle of gate greater than 8'-0" in width.

GATE POST

FENCE HEIGHT (Max)	SLATTED	B (in)	D (ft)	ROUND PIPE SECTION	ROUND PIPE ROUND OD PIPE	ROUND PIPE WEIGHT (lb/ft)
5'-0"	NO	12"	2'-6"	3 Std	3.50"	7.58
6'-0"	NO	12"	2'-6"	3 Std	3.50"	7.58
8'-0"	NO	12"	3'-0"	3 Std	3.50"	7.58
10'-0"	NO	14"	3'-6"	3 Std	3.50"	7.58
5'-0"	YES	12"	3'-0"	3½ Std	4.00"	9.12
6'-0"	YES	14"	3'-6"	4 Std	4.50"	10.80
8'-0"	YES	18"	3'-6"	5 Std	5.56"	14.60
10'-0"	YES	20"	4'-0"	6 Std	6.63"	19.00

Above post dimensions and weights are minimums.
Larger sizes may be used upon approval.

TYPICAL MEMBER DIMENSIONS (See Notes)

FENCE HEIGHT (Max)	SLATTED	B (in)	D (ft)	LINE POSTS ROUND PIPE SECTION	LINE POSTS ROUND PIPE ROUND OD PIPE	LINE POSTS ROUND PIPE WEIGHT (lb/ft)	LINE POSTS ROLL FORMED SECTION	LINE POSTS ROLL FORMED WEIGHT (lb/ft)	BRACES ROUND PIPE SECTION	BRACES ROUND PIPE ROUND OD PIPE	BRACES ROUND PIPE WEIGHT (lb/ft)	BRACES ROLL FORMED SECTION	BRACES ROLL FORMED WEIGHT (lb/ft)
5'-0"	NO	8"	2'-6"	1½ Std	1.90"	2.72	1.875" x 1.625"	1.85	1½" Std	1.90"	2.72	1.625" x 1.250"	1.35
6'-0"	NO	10"	2'-6"	2 Std	2.38"	3.66	1.875" x 1.625"	2.40	2 Std	2.38"	3.66	1.625" x 1.250"	1.35
8'-0"	NO	12"	3'-0"	2½ Std	2.88"	5.80	3.250" x 2.500"	4.50	2 Std	2.38"	3.66	1.625" x 1.250"	1.35
10'-0"	NO	14"	3'-6"	3 Std	3.50"	7.58	3.250" x 2.500"	4.50	2½ Std	2.88"	5.80	1.625" x 1.250"	1.35
5'-0"	YES	12"	3'-0"	3½ Std	4.00"	9.12	N/A	-	2 Std	2.38"	3.66	N/A	-
6'-0"	YES	14"	3'-0"	4 Std	4.50"	10.80	N/A	-	2 Std	2.38"	3.66	N/A	-
8'-0"	YES	18"	3'-6"	5 Std	5.56"	14.60	N/A	-	2 Std	2.38"	3.66	N/A	-
10'-0"	YES	20"	4'-0"	6 Std	6.63"	19.00	N/A	-	2½ Std	2.88"	5.80	N/A	-

NOTES:

1. The table to the right shows minimum sized posts and braces complying with the specifications. Larger or heavier post and brace sizes may be used upon approval.
2. Sections shown in the tables must also comply with the strength requirements and other provisions of the Specifications.
3. Other sections which comply with the strength requirements and other provisions of the Specifications may be used upon approval.
4. Options exercised shall be uniform on any one project.
5. Offset to be 2'-0" at monument locations, measured at right angles to R/W lines. Taper to achieve offset to be at least 20'-0" long.
6. See Standard Plan A85B for Brace, Stretcher Bar, and Truss Tightener Details.

STATE OF CALIFORNIA
DEPARTMENT OF TRANSPORTATION

CHAIN LINK FENCE

NO SCALE

RSP A85 DATED JULY 21, 2017 SUPERSEDES RSP A85 DATED JANUARY 20, 2017 AND RSP A85 DATED JULY 15, 2016 AND STANDARD PLAN A85 DATED OCTOBER 30, 2015 - PAGE 117 OF THE STANDARD PLANS BOOK DATED 2015.

REVISED STANDARD PLAN RSP A85

2-28-17

© 2017 California Department of Transportation
All Rights Reserved

Dist	COUNTY	ROUTE	POST MILES TOTAL PROJECT	SHEET No.	TOTAL SHEETS
04	SCL	101,237	45.2/45.8 2.7/3.3	592	736

B. Valizadeh
REGISTERED CIVIL ENGINEER

July 21, 2017
PLANS APPROVAL DATE

M. Reza Valizadeh No. C51902 Exp. 6-30-18 CIVIL — REGISTERED PROFESSIONAL ENGINEER — STATE OF CALIFORNIA

THE STATE OF CALIFORNIA OR ITS OFFICERS OR AGENTS SHALL NOT BE RESPONSIBLE FOR THE ACCURACY OR COMPLETENESS OF SCANNED COPIES OF THIS PLAN SHEET.

TO ACCOMPANY PLANS DATED _____

2015 REVISED STANDARD PLAN RSP A85A

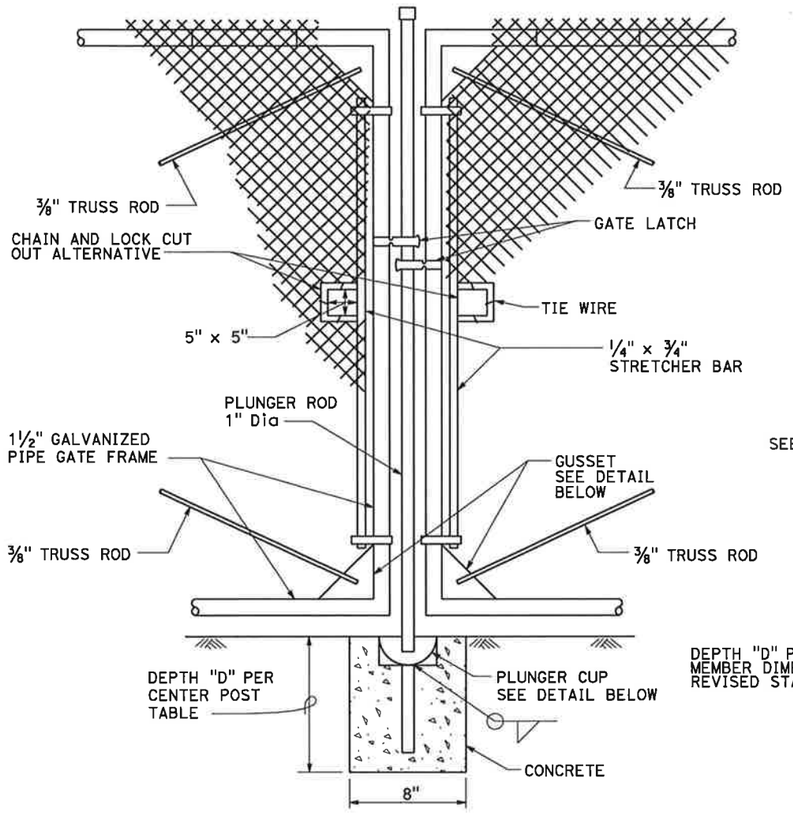

DOUBLE GATE REMOVABLE CENTER POST

Each gate maximum width is 12'-0"

CENTER POST		
FENCE HEIGHT (Max)	SLATTED	D
ALL HEIGHTS	NO	1'-6"
5'-0"	YES	3'-0"
6'-0"	YES	3'-0"
8'-0"	YES	3'-6"
10'-0"	YES	4'-0"

NOTES:

1. B is not less than 3 times maximum cross section of post with minimum of 8".
2. See Revised Standard Plan RSP A85 for Chain Link Fencing dimensions.
3. See Detail A on Standard Plan A86B for connection at headwall.
4. See Detail D on Standard Plan A86B for connection at headwall.

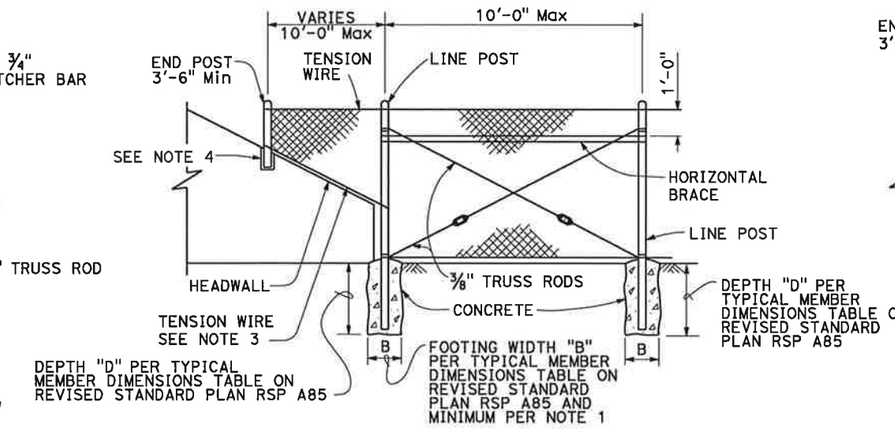

METHOD OF TYING FENCE TO HEADWALL

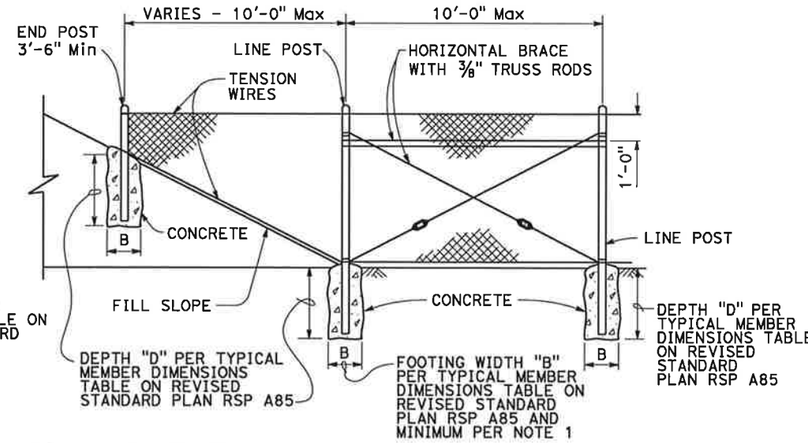

METHOD OF ERECTING FENCE FOR FILL SLOPE

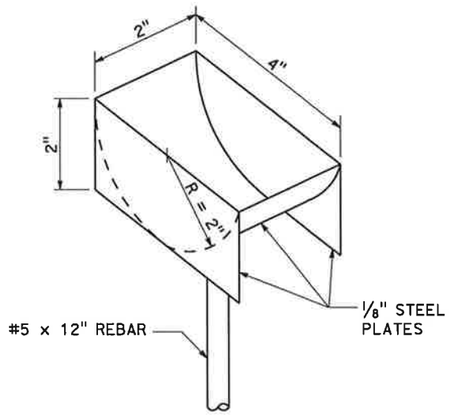

PLUNGER CUP DETAIL

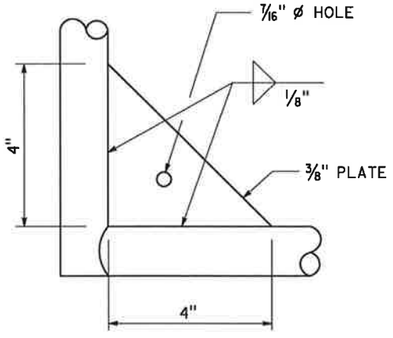

GUSSET DETAIL

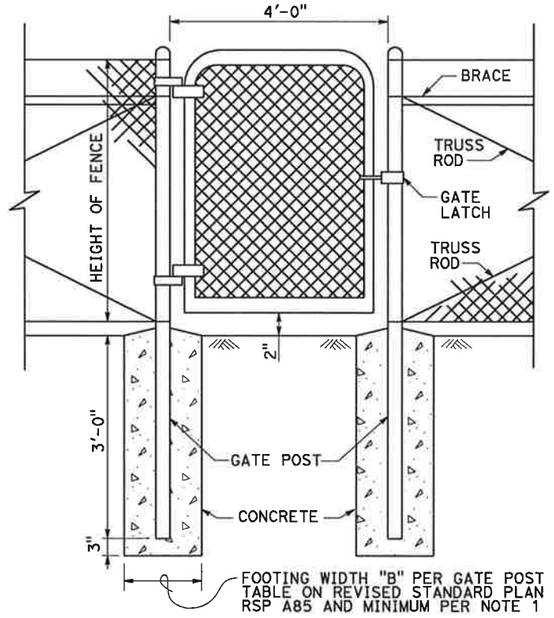

WALK GATE

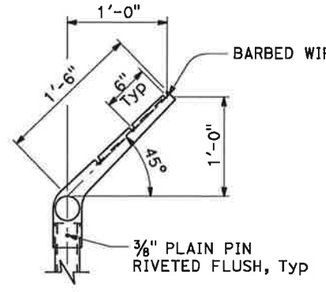

LINE POST

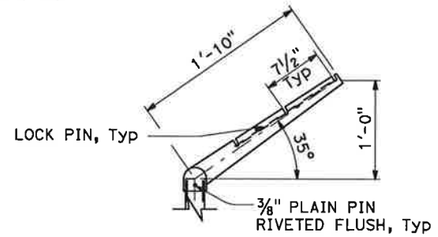

CORNER POST

BARBED WIRE POST TOP

STATE OF CALIFORNIA
DEPARTMENT OF TRANSPORTATION

CHAIN LINK FENCE DETAILS

NO SCALE

RSP A85A DATED JULY 21, 2017 SUPERSEDES RSP A85A DATED JANUARY 20, 2017 AND RSP A85A DATED JULY 15, 2016 AND STANDARD PLAN A85A DATED OCTOBER 30, 2015 - PAGE 118 OF THE STANDARD PLANS BOOK DATED 2015.

REVISED STANDARD PLAN RSP A85A

5-5-17

© 2016 California Department of Transportation
All Rights Reserved

Dist	COUNTY	ROUTE	POST MILES TOTAL PROJECT	SHEET No.	TOTAL SHEETS
04	SCL	101,237	45.2/45.8 2.7/3.3	593	736

REGISTERED CIVIL ENGINEER

January 15, 2016
PLANS APPROVAL DATE

REGISTERED PROFESSIONAL ENGINEER
Michael Janzen
No. 44788
Exp. 3-31-16
CIVIL
STATE OF CALIFORNIA

THE STATE OF CALIFORNIA OR ITS OFFICERS OR AGENTS SHALL NOT BE RESPONSIBLE FOR THE ACCURACY OR COMPLETENESS OF SCANNED COPIES OF THIS PLAN SHEET.

TO ACCOMPANY PLANS DATED _____

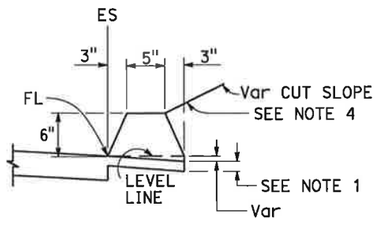

TYPE A
See Notes 3 and 5

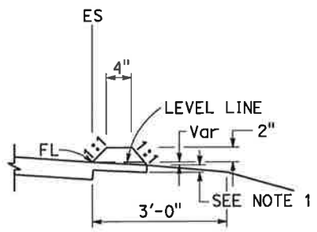

TYPE C

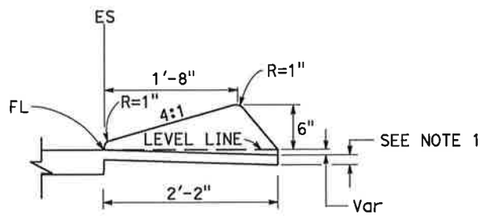

TYPE D

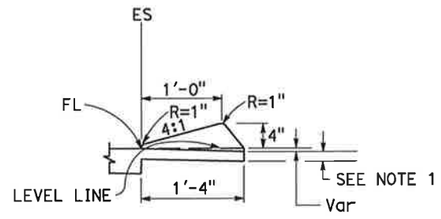

TYPE E

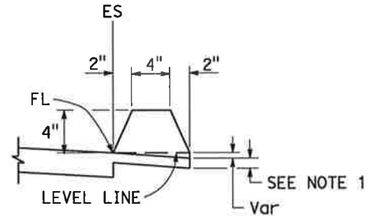

TYPE F
See Note 5

DIKES

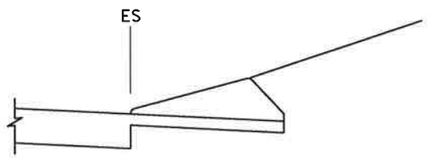

CASE C-1
Cut Slope

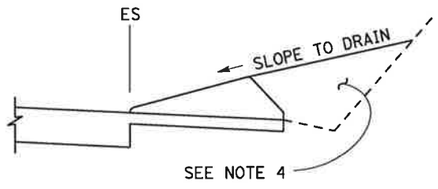

CASE C-2
Cut Slope

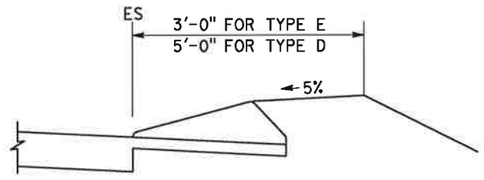

CASE F

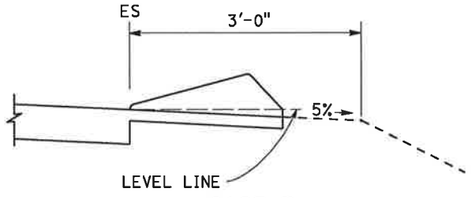

CASE R
See Note 2

TYPE D AND E BACKFILL DETAILS

NOTES:

1. For HMA shoulders only, extend top layer of HMA placed on the shoulder under dike with no joint at the ES. For projects with OGFC shoulders, do not extend OGFC under dike. See project plans for modified dike detail.
2. Case R applies to retrofit only projects where restrictive conditions do not provide enough width for Case F backfill.
3. Type A dike only to be used where restrictive slope conditions do not provide enough width to use Type D or Type E dike.
4. Fill and compact with excavated material to top of dike.
5. Use Type A or F dike, where dike is required with guardrail installations. See Standard Plan A77N4 for dike positioning details. See Standard Plan A77N3 for hinge point offsets with guardrail.

DIKE QUANTITIES

TYPE	CUBIC YARDS PER LINEAR FOOT
A	0.0135
C	0.0038
D	0.0293
E	0.0130
F	0.0066

Quantities based on 5% cross slope.

STATE OF CALIFORNIA
DEPARTMENT OF TRANSPORTATION

HOT MIX ASPHALT DIKES

NO SCALE

RSP A87B DATED JANUARY 15, 2016 SUPERSEDES STANDARD PLAN A87B DATED OCTOBER 30, 2015 - PAGE 126 OF THE STANDARD PLANS BOOK DATED 2015.

REVISED STANDARD PLAN RSP A87B

11-17-15

2015 REVISED STANDARD PLAN RSP A87B

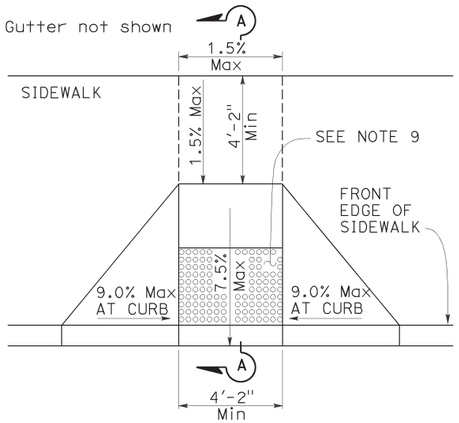

CASE A

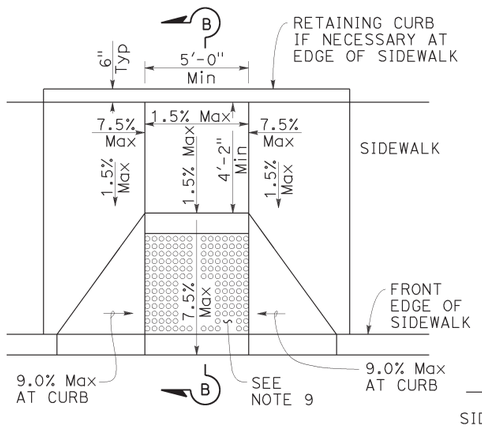

CASE B

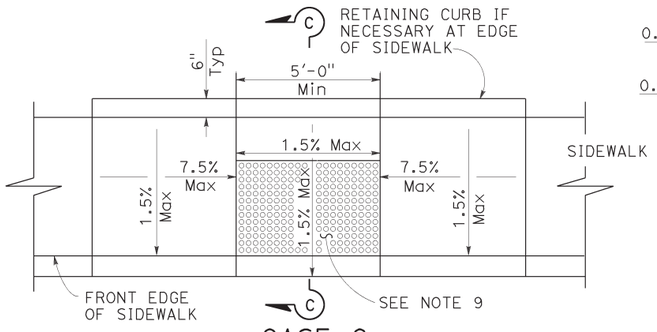

CASE C

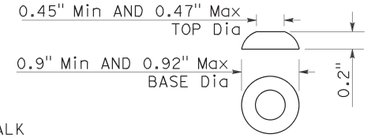

RAISED TRUNCATED DOME

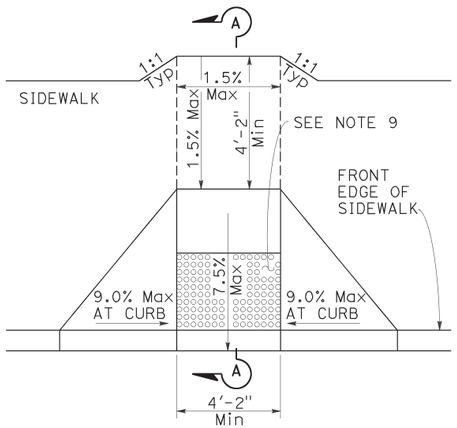

CASE D

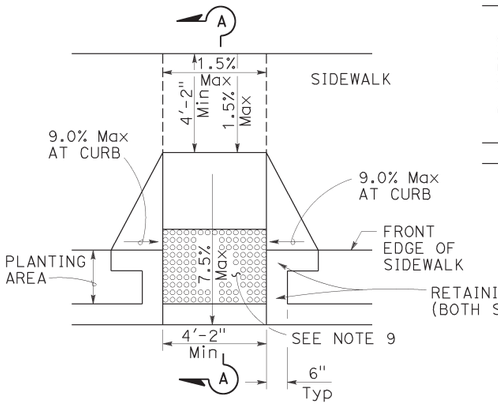

CASE E

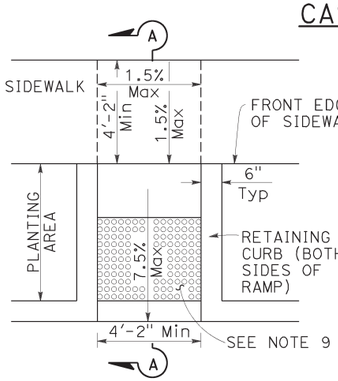

CASE F

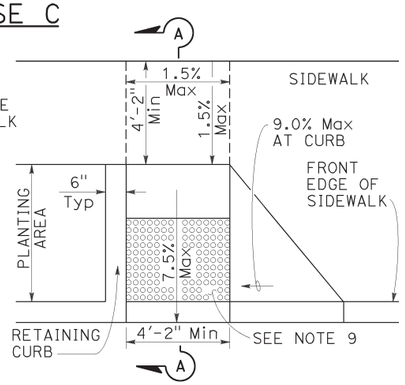

CASE G

See Note 4

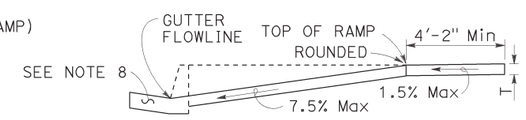

SECTION A-A

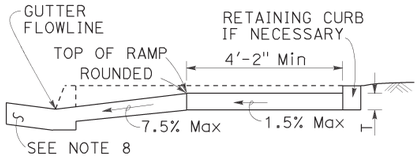

SECTION B-B

Depress entire sidewalk as required

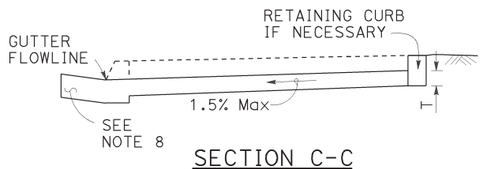

SECTION C-C

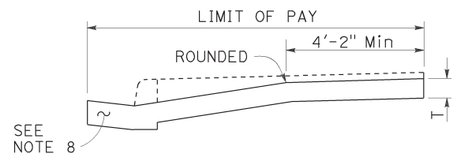

RETROFIT PAY LIMITS

Existing curb and sidewalk

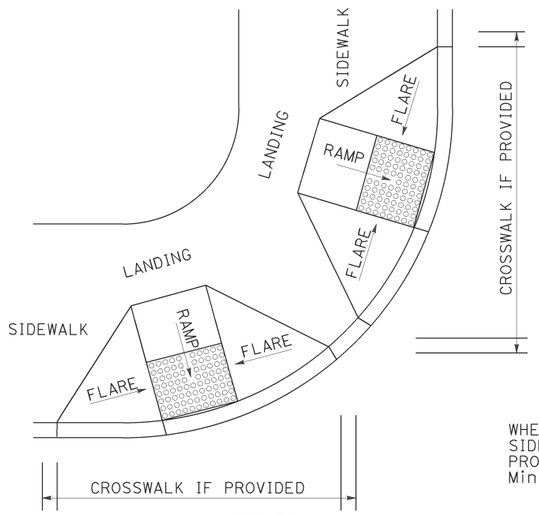

DETAIL A

TYPICAL TWO-RAMP CORNER INSTALLATION

See Note 1

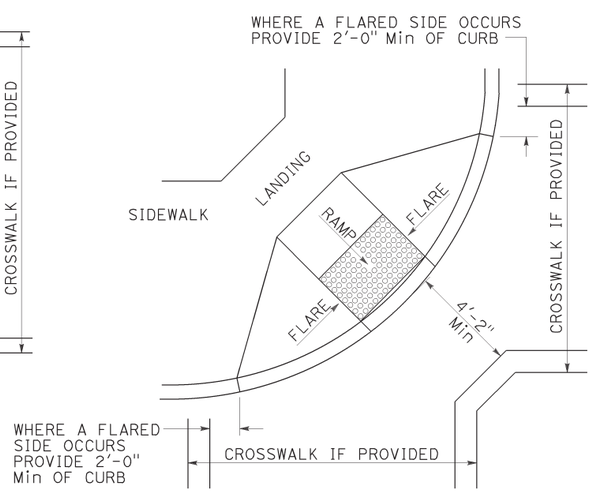

DETAIL B

TYPICAL ONE-RAMP CORNER INSTALLATION

See Notes 1 and 3

RAISED TRUNCATED DOME PATTERN (IN-LINE)

DETECTABLE WARNING SURFACE

See Note 9

NOTES:

1. As site conditions dictate, Case A through Case G curb ramps may be used for corner installations similar to those shown in Detail A and Detail B. The case of curb ramps used in Detail A do not have to be the same. Case A through Case G curb ramps also may be used at mid block locations, as site conditions dictate.
2. If distance from curb to back of sidewalk is too short to accommodate ramp and 4'-2" platform (landing) as shown in Case A, the sidewalk may be depressed longitudinally as in Case B or C or may be widened as in Case D.
3. When ramp is located in center of curb return, crosswalk configuration must be similar to that shown for Detail B.
4. As site conditions dictate, the retaining curb side and the flared side of the Case G ramp shall be constructed in reversed position.
5. If located on a curve, the sides of the ramp need not be parallel, but the minimum width of the ramp shall be 4'-2".
6. Side slope of ramp flares vary uniformly from a maximum of 9.0% at curb to conform with longitudinal sidewalk slope adjacent to top of the ramp, except in Case C and Case F.
7. The adjacent surfaces at transitions at curb ramps to walks, gutters, and streets shall be at the same level.
8. Counter slopes of adjoining gutters and road surfaces immediately adjacent to and within 24 inches of the curb ramp shall not be steeper than 1V:20H (5.0%). Gutter pan slope shall not exceed 1" of depth for each 2'-0" of width.
9. Curb ramps shall have a detectable warning surface that extends the full width and 3'-0" depth of the ramp. A 4'-0" wide detectable warning surface may be used on a 4'-2" wide curb ramp. Detectable Warning Surfaces shall conform to the requirements in the Standard Specifications.
10. Sidewalk and ramp thickness, "T", shall be 3½" minimum.
11. Utility pull boxes, manholes, vaults and all other utility facilities within the boundaries of the curb ramp will be relocated or adjusted to grade by the owner prior to, or in conjunction with, curb ramp construction.
12. Detectable warning surface may have to be cut to allow removal of utility covers while maintaining full detectable warning width and depth.

Dist	COUNTY	ROUTE	POST MILES TOTAL PROJECT	SHEET No.	TOTAL SHEETS
04	SCL	101,237	45.2/45.8 2.7/3.3	594	736

REGISTERED CIVIL ENGINEER

Hector David Cordova No. C41957 Exp. 3-31-18 CIVIL

REGISTERED PROFESSIONAL ENGINEER — STATE OF CALIFORNIA

July 15, 2016

PLANS APPROVAL DATE

THE STATE OF CALIFORNIA OR ITS OFFICERS OR AGENTS SHALL NOT BE RESPONSIBLE FOR THE ACCURACY OR COMPLETENESS OF SCANNED COPIES OF THIS PLAN SHEET.

TO ACCOMPANY PLANS DATED _____

STATE OF CALIFORNIA
DEPARTMENT OF TRANSPORTATION

CURB RAMP DETAILS

NO SCALE

RSP A88A DATED JULY 15, 2016 SUPERSEDES STANDARD PLAN A88A
DATED OCTOBER 30, 2015 - PAGE 127 OF THE STANDARD PLANS BOOK DATED 2015.

REVISED STANDARD PLAN RSP A88A

2015 REVISED STANDARD PLAN RSP A88A

3-30-16

© 2017 California Department of Transportation
All Rights Reserved

Dist	COUNTY	ROUTE	POST MILES TOTAL PROJECT	SHEET No.	TOTAL SHEETS
04	SCL	101,237	45.2/45.8 2.7/3.3	595	736

H. David Cordova
REGISTERED CIVIL ENGINEER

July 21, 2017
PLANS APPROVAL DATE

REGISTERED PROFESSIONAL ENGINEER — Hector David Cordova — No. C41957 — Exp. 3-31-18 CIVIL — STATE OF CALIFORNIA

THE STATE OF CALIFORNIA OR ITS OFFICERS OR AGENTS SHALL NOT BE RESPONSIBLE FOR THE ACCURACY OR COMPLETENESS OF SCANNED COPIES OF THIS PLAN SHEET.

TO ACCOMPANY PLANS DATED _____

Gutter not shown

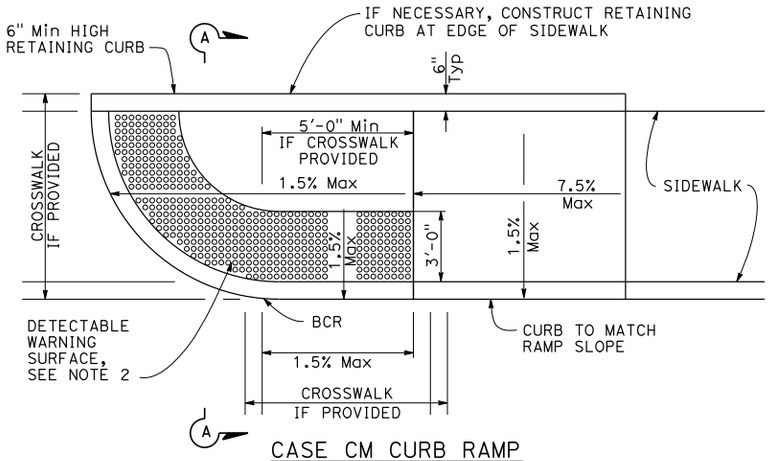

CASE CM CURB RAMP

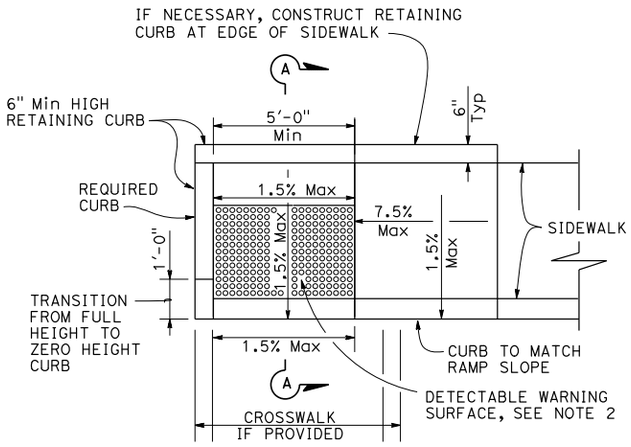

CASE CH CURB RAMP

NOTES:

1. Sidewalk, ramp and passageway thickness, "T", shall be 3½" minimum.
2. For details of detectable warning surfaces, see Revised Standard Plan RSP A88A.
3. Where an island passageway length is greater than or equal to 6'-0", but less than 8'-0", each detectable warning surface shall extend the full width and 2'-0" depth of the passageway length. Where an island passageway length is greater than or equal to 8'-0", each detectable warning surface shall extend the full width and 3'-0" depth of the passageway length. Detectable warning surfaces shall extend the full width of the island passageway except a maximum gap of 1 inch is allowed on each side of the passageway.
4. The adjacent surfaces at transitions at curb ramps to walks, gutters, and streets shall be at the same level.
5. Utility pull boxes, manholes, vaults and all other utility facilities within the boundaries of the curb ramp will be relocated or adjusted to grade by the owner prior to, or in conjunction with, curb ramp construction.
6. Detectable warning surface may have to be cut to allow removal of utility covers while maintaining detectable warning width and depth.
7. For additional curb ramp details, see Revised Standard Plan RSP A88A.
8. The detectable warning surface will be a rectangle as shown at the face of curb, unless modified in the Project Plans.

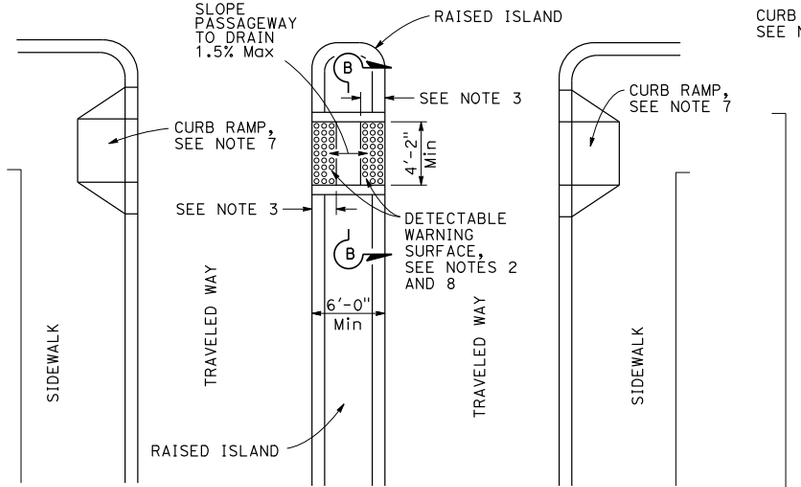

TYPE A PASSAGEWAY

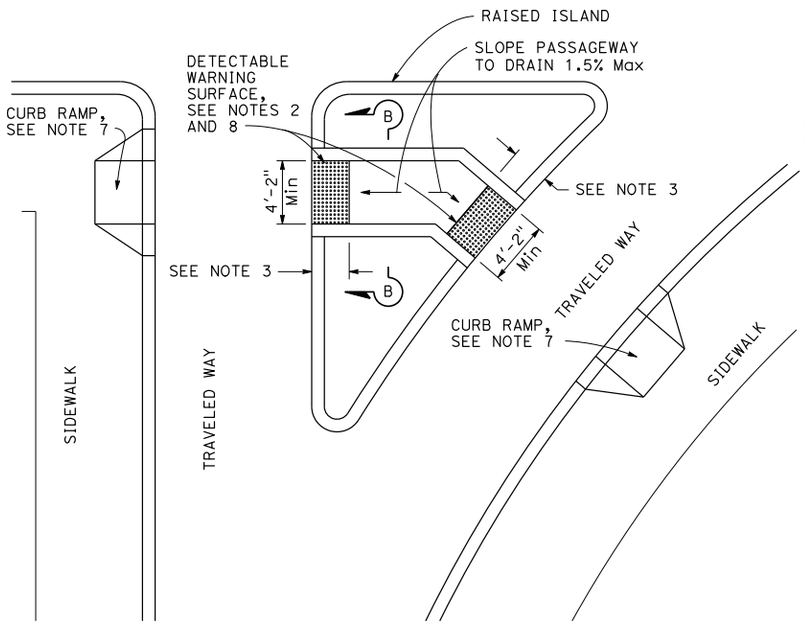

TYPE B PASSAGEWAY

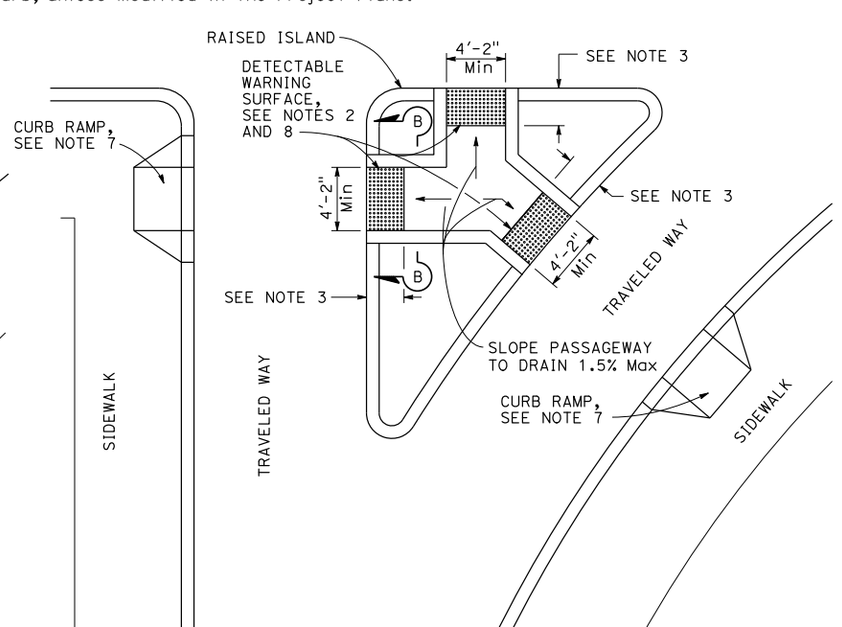

TYPE C PASSAGEWAY

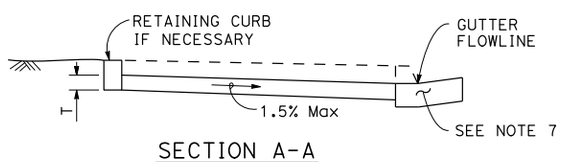

SECTION A-A

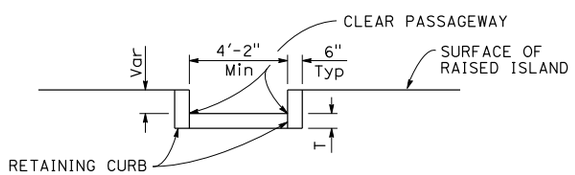

SECTION B-B

STATE OF CALIFORNIA
DEPARTMENT OF TRANSPORTATION

CURB RAMP AND ISLAND PASSAGEWAY DETAILS

NO SCALE

RSP A88B DATED JULY 21, 2017 SUPERSEDES RSP A88B DATED JULY 15, 2016 AND STANDARD PLAN A88B DATED OCTOBER 30, 2015 - PAGE 128 OF THE STANDARD PLANS BOOK DATED 2015.

REVISED STANDARD PLAN RSP A88B

2015 REVISED STANDARD PLAN RSP A88B

5-16-17

© 2016 California Department of Transportation
All Rights Reserved

Dist	COUNTY	ROUTE	POST MILES TOTAL PROJECT	SHEET No.	TOTAL SHEETS
04	SCL	101,237	45.2/45.8 2.7/3.3	596	736

REGISTERED CIVIL ENGINEER

July 15, 2016
PLANS APPROVAL DATE

REGISTERED PROFESSIONAL ENGINEER — Carl W. Duan, No. C59976, Exp. 6-30-18, CIVIL, STATE OF CALIFORNIA

THE STATE OF CALIFORNIA OR ITS OFFICERS OR AGENTS SHALL NOT BE RESPONSIBLE FOR THE ACCURACY OR COMPLETENESS OF SCANNED COPIES OF THIS PLAN SHEET.

TO ACCOMPANY PLANS DATED _____

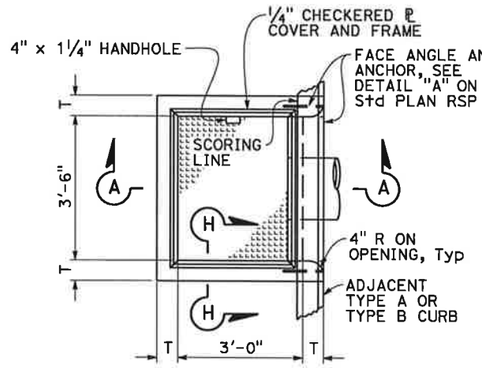

PLAN
TYPE OS

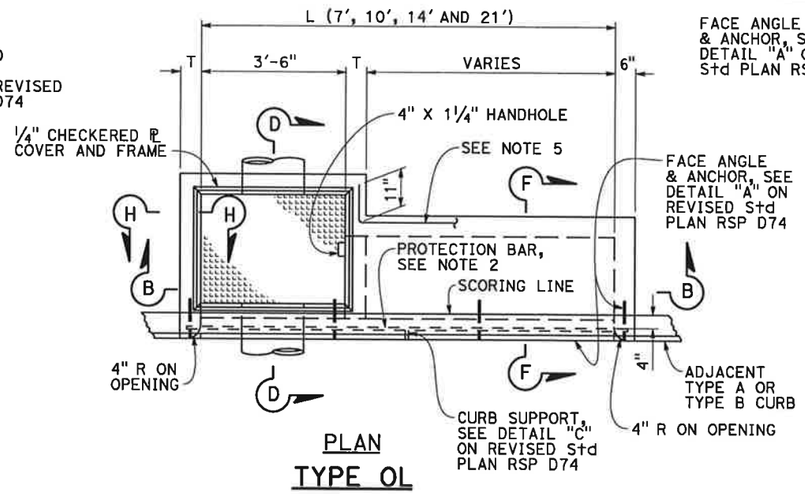

PLAN
TYPE OL

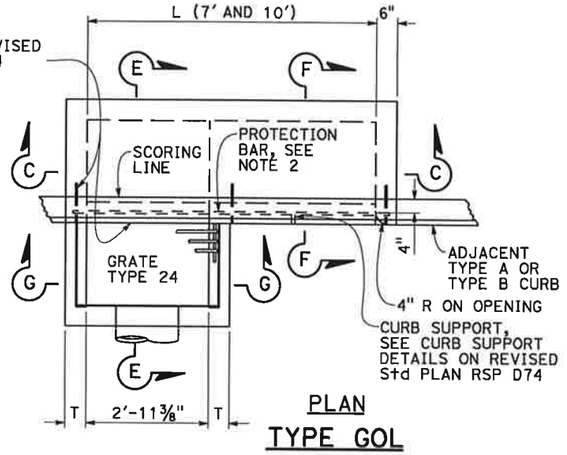

PLAN
TYPE GOL

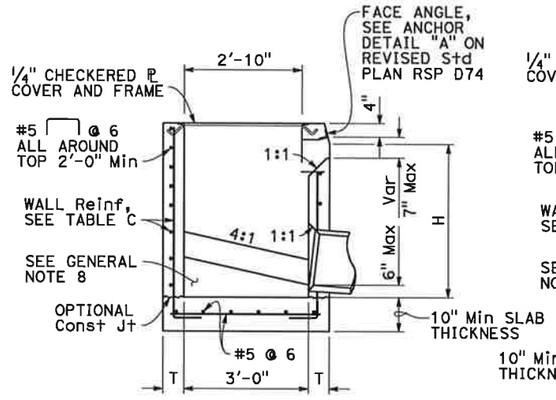

SECTION A-A

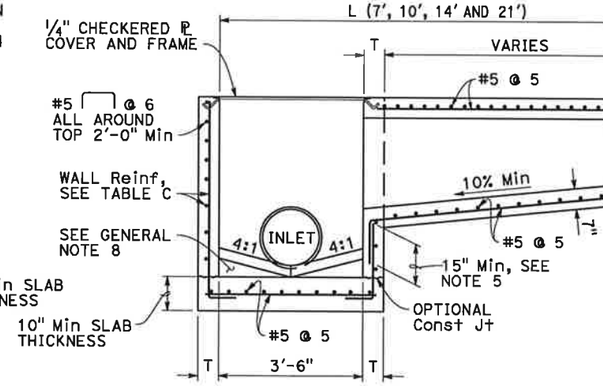

SECTION B-B

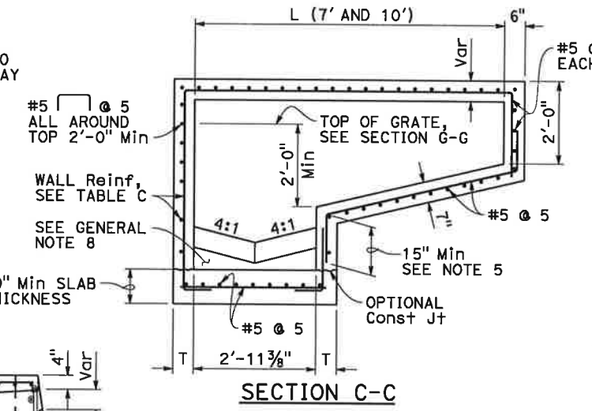

SECTION C-C

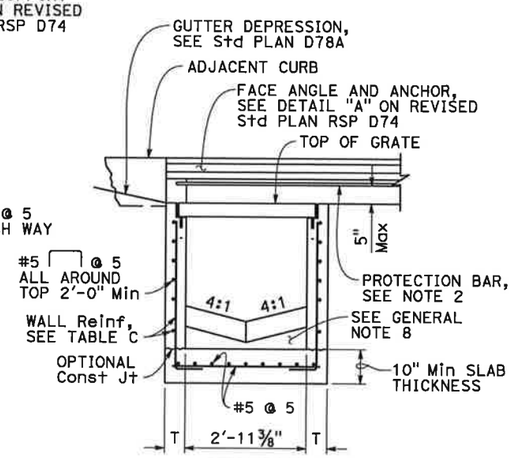

SECTION G-G

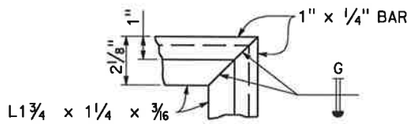

COVER FRAME
TYPICAL EACH CORNER
(CHECKERED PL COVER NOT SHOWN)

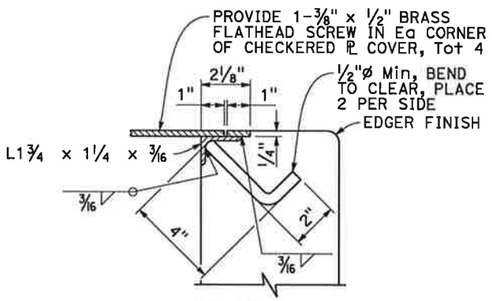

SECTION H-H

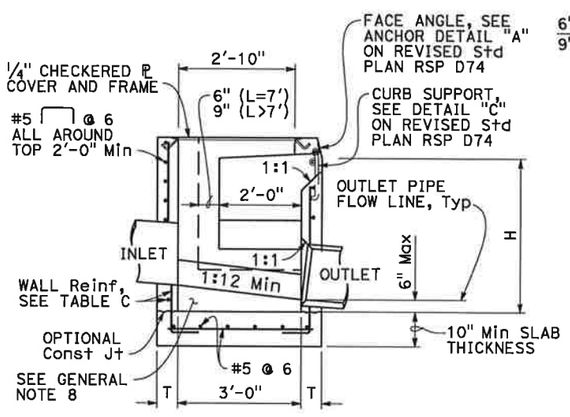

SECTION D-D

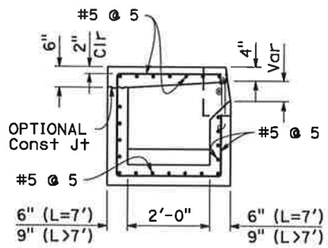

SECTION F-F
(SEE NOTE 5)

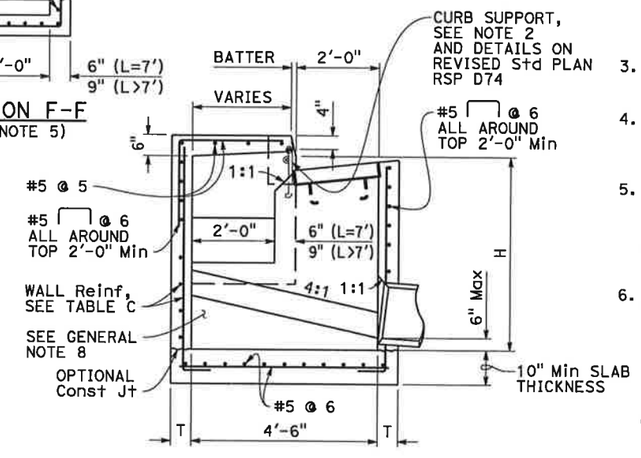

SECTION E-E

NOTES:

1. See Revised Standard Plan RSP D72F for General Notes and additional details. See Revised Standard Plan RSP D72G for tables, wall thickness "T" and quantities.
2. Where shown on the project plans, place a ¾"ø plain round protection bar horizontally across the length of the opening and bend back 4" into the inlet wall on each side.
3. Complete joint penetration butt welds may be substituted for the fillet welds on all anchors.
4. Standard square, hexagon, round or equivalent headed anchors may be substituted for the right angle hooks on the anchors shown on this plan.
5. Extend all horizontal bars from inlet extensions into adjacent concrete elements of main inlet box a minimum of 15". Where shown, bend horizontal bars into box. If necessary rotate bars to maintain 2" clear coverage.
6. Height of curb opening will vary with the type of curb and the depth of the local depression.

STATE OF CALIFORNIA
DEPARTMENT OF TRANSPORTATION

CIP DRAINAGE INLETS TYPES OS, OL AND GOL

NO SCALE

RSP D72A DATED JULY 15, 2016 SUPPLEMENTS THE STANDARD PLANS BOOK DATED 2015.

REVISED STANDARD PLAN RSP D72A

2015 REVISED STANDARD PLAN RSP D72A

6-28-16

© 2017 California Department of Transportation
All Rights Reserved

Dist	COUNTY	ROUTE	POST MILES TOTAL PROJECT	SHEET No.	TOTAL SHEETS
04	SCL	101,237	45.2/45.8 2.7/3.3	597	736

REGISTERED CIVIL ENGINEER

July 21, 2017
PLANS APPROVAL DATE

Carl M. Duan
No. C59976
Exp. 6-30-18
CIVIL
STATE OF CALIFORNIA
REGISTERED PROFESSIONAL ENGINEER

THE STATE OF CALIFORNIA OR ITS OFFICERS OR AGENTS SHALL NOT BE RESPONSIBLE FOR THE ACCURACY OR COMPLETENESS OF SCANNED COPIES OF THIS PLAN SHEET.

TO ACCOMPANY PLANS DATED

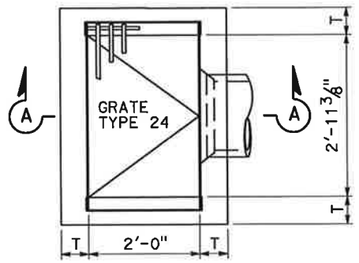

PLAN
TYPE G1

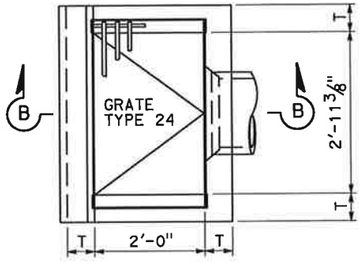

PLAN
TYPE G3

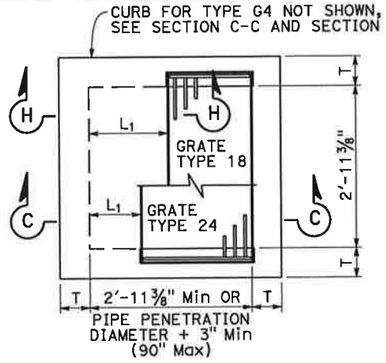

PLAN
STANDARD
TYPE G2 OR G4

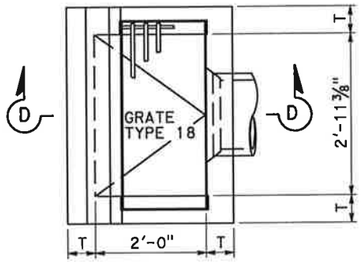

PLAN
TYPE G5

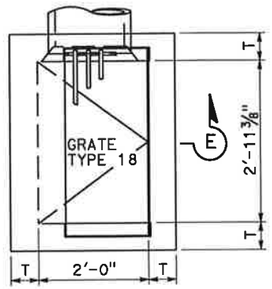

PLAN
TYPE G6

NOTES:

1. For notes and Table 2, See Revised Standard Plan RSP D72C.
2. For L_1 or L_2 greater than 2'-10", see Table 1 for wall thickness dimension and see Table C in Revised Standard Plan RSP D72G for reinforcement. Otherwise, see Table C in Revised Standard Plan RSP D72G for wall thickness and reinforcement.

TABLE 1	
	T
L_1 OR L_2 > 2'-10"	12"

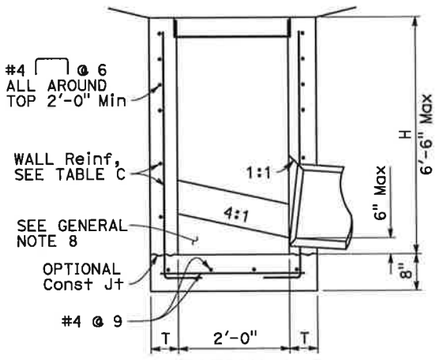

SECTION A-A

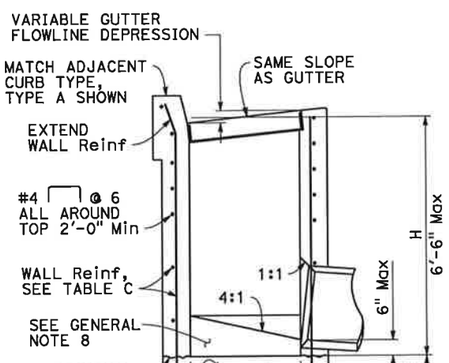

SECTION B-B

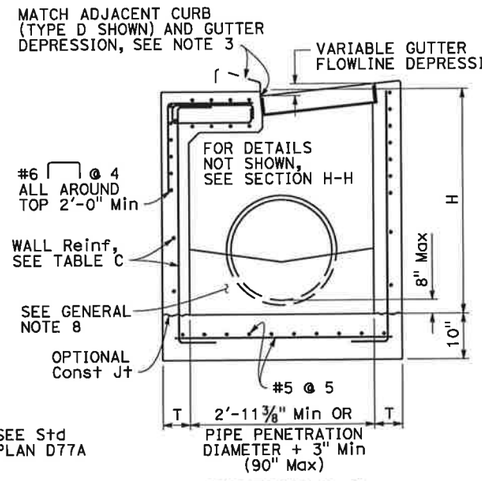

SECTION C-C

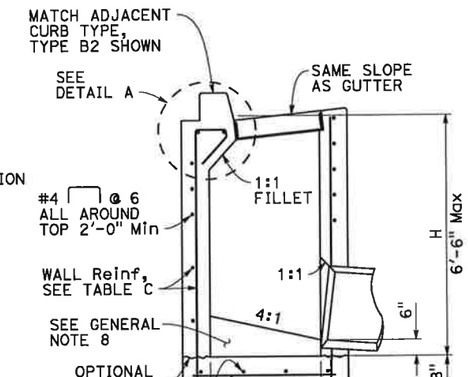

SECTION D-D

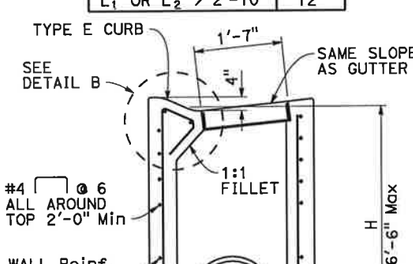

SECTION E-E

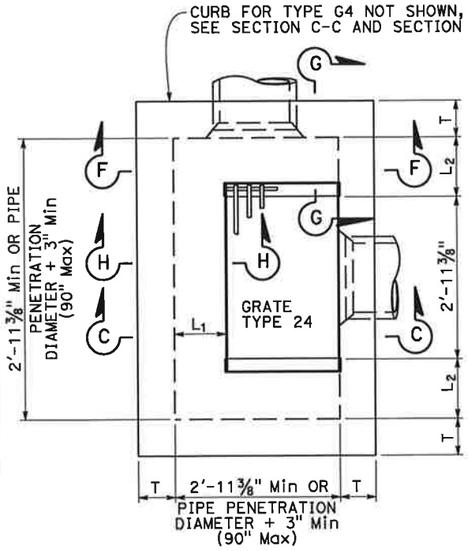

PLAN
EXPANDED
TYPE G2 OR G4

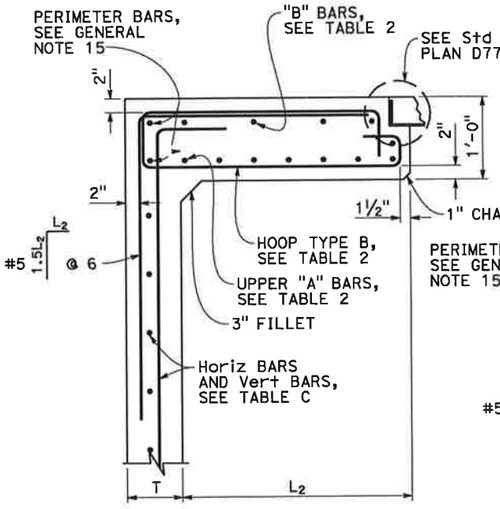

SECTION G-G

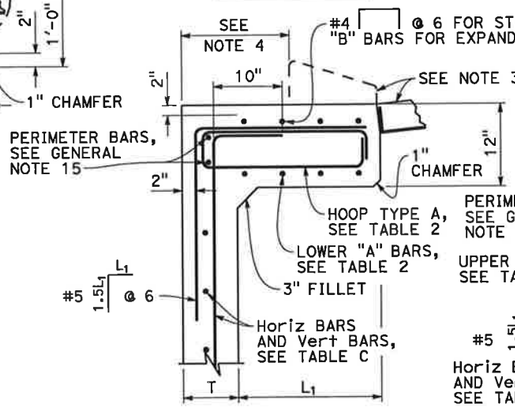

SECTION H-H

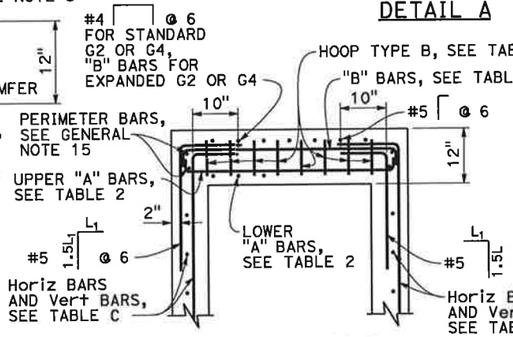

SECTION F-F

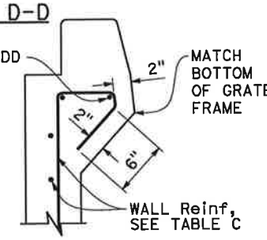

DETAIL A

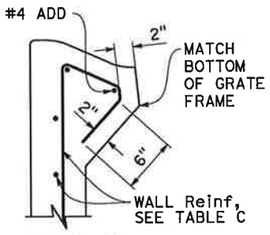

DETAIL B

STATE OF CALIFORNIA
DEPARTMENT OF TRANSPORTATION

CIP DRAINAGE INLETS TYPES G1, G2, G3, G4, G5 AND G6

NO SCALE

RSP D72B DATED JULY 21, 2017 SUPERSEDES RSP D72B
DATED JULY 15, 2016 THAT SUPPLEMENTS THE STANDARD PLANS BOOK DATED 2015.

REVISED STANDARD PLAN RSP D72B

2015 REVISED STANDARD PLAN RSP D72B

5-26-17

© 2017 California Department of Transportation
All Rights Reserved

Dist	COUNTY	ROUTE	POST MILES TOTAL PROJECT	SHEET No.	TOTAL SHEETS
04	SCL	101,237	45.2/45.8 2.7/3.3	598	736

REGISTERED CIVIL ENGINEER

July 21, 2017
PLANS APPROVAL DATE

REGISTERED PROFESSIONAL ENGINEER
Carl M. Duan
No. C59976
Exp. 6-30-18
CIVIL
STATE OF CALIFORNIA

THE STATE OF CALIFORNIA OR ITS OFFICERS OR AGENTS SHALL NOT BE RESPONSIBLE FOR THE ACCURACY OR COMPLETENESS OF SCANNED COPIES OF THIS PLAN SHEET.

TO ACCOMPANY PLANS DATED _____

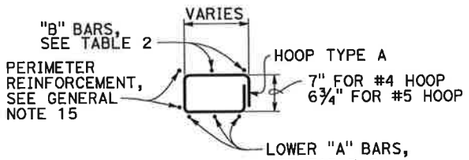

HOOP TYPE A

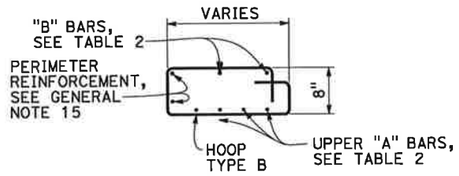

HOOP TYPE B

NOTES:

1. See Revised Standard Plan RSP D72F for General Notes and additional details. See Revised Standard Plan RSP D72G for tables and quantities.
2. Type G4 inlet can use Grate Type 18 or 24. Type G2 inlet uses Grate Type 24.
3. Type G4 inlet details are similar to Type G2 inlet details, except for the addition of a curb and sloped grate to match the adjacent curb and gutter depression.
4. Dimension will vary with different grates, curb types, box width and wall thickness.

TABLE 2 - TOP SLAB REINFORCEMENT

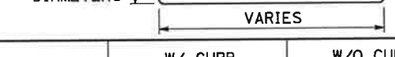

	W/ CURB	W/O CURB
"A" BARS	#4 @ 5 (2 BARS Min)	#5 @ 5 (3 BARS Min)
"B" BARS	#4 @ 10 (2 BARS Min)	#4 @ 12 (2 BARS Min)
HOOPS ("A" & "B")	#4 @ 5	#5 @ 5

ROTATE "A" AND "B" BARS SO HOOKED ENDS WILL MAINTAIN 2" CLEAR COVERAGE.

STATE OF CALIFORNIA
DEPARTMENT OF TRANSPORTATION

CIP DRAINAGE INLETS TYPES G1, G2, G3, G4, G5 AND G6

NO SCALE

RSP D72C DATED JULY 21, 2017 SUPERSEDES RSP D72C DATED JULY 15, 2016 THAT SUPPLEMENTS THE STANDARD PLANS BOOK DATED 2015.

REVISED STANDARD PLAN RSP D72C

2015 REVISED STANDARD PLAN RSP D72C

5-16-17

© 2016 California Department of Transportation
All Rights Reserved

Dist	COUNTY	ROUTE	POST MILES TOTAL PROJECT	SHEET No.	TOTAL SHEETS
04	SCL	101,237	45.2/45.8 2.7/3.3	599	736

REGISTERED CIVIL ENGINEER

July 15, 2016
PLANS APPROVAL DATE

Carl M. Duan
No. C59976
Exp. 6-30-18
CIVIL
REGISTERED PROFESSIONAL ENGINEER
STATE OF CALIFORNIA

THE STATE OF CALIFORNIA OR ITS OFFICERS OR AGENTS SHALL NOT BE RESPONSIBLE FOR THE ACCURACY OR COMPLETENESS OF SCANNED COPIES OF THIS PLAN SHEET.

TO ACCOMPANY PLANS DATED _____

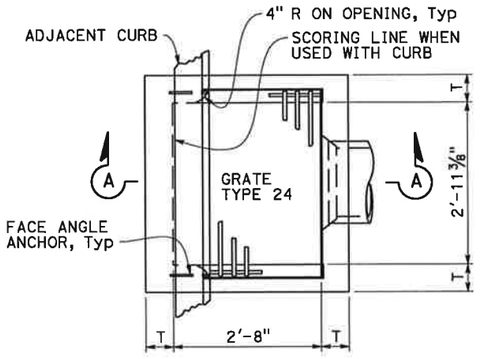

PLAN
TYPE GO

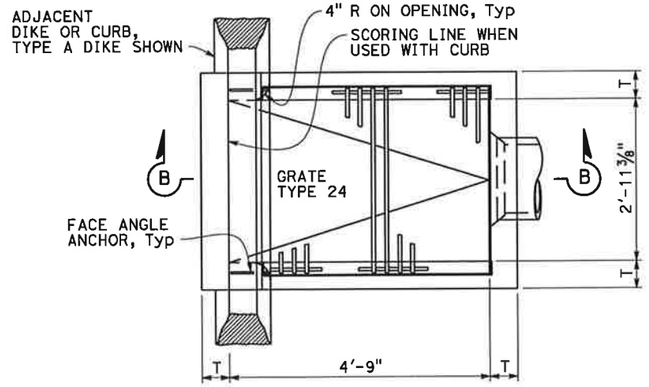

PLAN
TYPE GDO

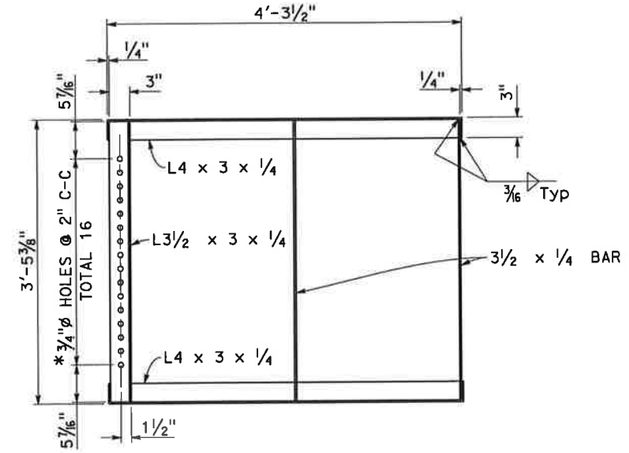

GRATE FRAME FOR TYPE GDO INLET
* HOLES REQUIRED ONLY WITH TRASH RACK

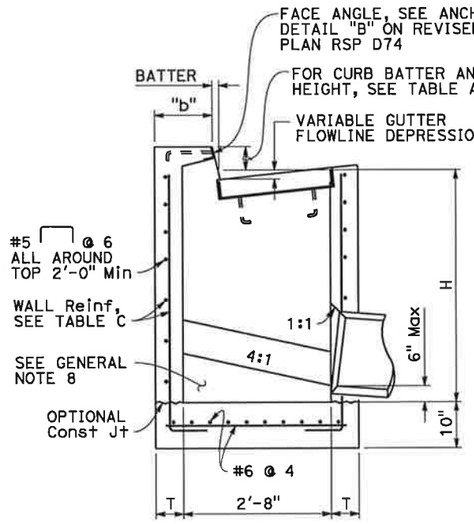

SECTION A-A

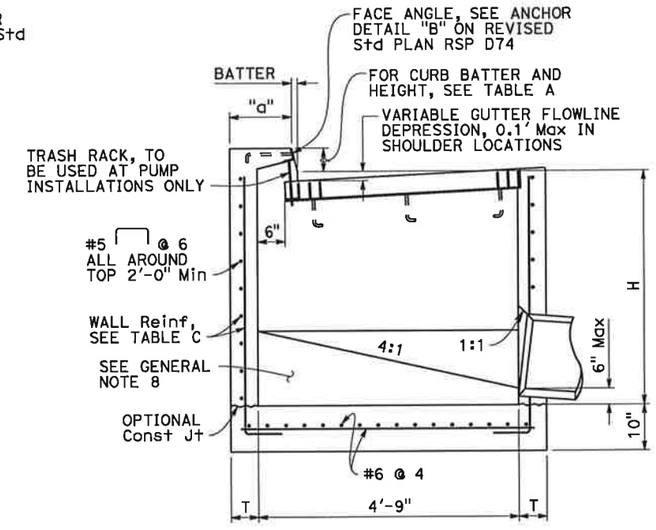

SECTION B-B

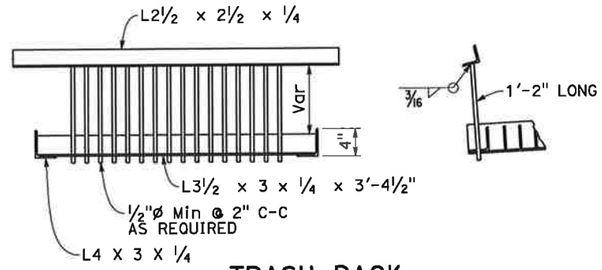

TRASH RACK
(FOR USE WITH PUMP INSTALLATION)

TABLE A				
CURB TYPE	NORMAL CURB HEIGHT	CURB BATTER	"a" DIMENSION	"b" DIMENSION
A1-6	6"	1 1/2"	T+7 1/2"	T+6 1/2"
A1-8	8"	2"	T+7"	T+6"
B1-6	6"	4"	T+5"	T+4"
TYPE A DIKE	6"	3"	T+6"	T+5"

Height of curb opening will vary with the type of curb and the depth of the local depression.

NOTES:

1. See Revised Standard Plan RSP D72F for General Notes and additional details. See Revised Standard Plan RSP D72G for tables, wall thickness "T" and quantities.
2. Where shown on the project plans, place a 3/4"ø plain round protection bar horizontally across the length of the opening and bend back 4" into the inlet wall on each side.
3. Complete joint penetration butt welds may be substituted for the fillet welds on all anchors.
4. Standard square, hexagon, round or equivalent headed anchors may be substituted for the right angle hooks on the anchors shown on this plan.

STATE OF CALIFORNIA
DEPARTMENT OF TRANSPORTATION

CIP DRAINAGE INLETS TYPES GO AND GDO

NO SCALE

RSP D72E DATED JULY 15, 2016 SUPPLEMENTS THE STANDARD PLANS BOOK DATED 2015.

REVISED STANDARD PLAN RSP D72E

2015 REVISED STANDARD PLAN RSP D72E

6-20-16

© 2016 California Department of Transportation
All Rights Reserved

Dist	COUNTY	ROUTE	POST MILES TOTAL PROJECT	SHEET No.	TOTAL SHEETS
04	SCL	101,237	45.2/45.8 2.7/3.3	600	736

REGISTERED CIVIL ENGINEER

Carl M. Duan
No. C59976
Exp. 6-30-18
CIVIL
REGISTERED PROFESSIONAL ENGINEER
STATE OF CALIFORNIA

July 15, 2016
PLANS APPROVAL DATE

THE STATE OF CALIFORNIA OR ITS OFFICERS OR AGENTS SHALL NOT BE RESPONSIBLE FOR THE ACCURACY OR COMPLETENESS OF SCANNED COPIES OF THIS PLAN SHEET.

TO ACCOMPANY PLANS DATED _____

GENERAL NOTES:

1. "H" is measured from top of bottom slab to the normal gutter grade line undepressed at the curb face.
2. For "T" wall thickness and reinforcement, see Table C on Revised Standard Plan RSP D72G.
3. Wall reinforcement must be placed in the center of the wall thickness with horizontal bars placed on the exterior face. Bottom slab concrete cover must be 3" clear on the interior face unless otherwise noted. Top slab concrete cover must be 2" clear on the exterior face unless otherwise noted. Reinforcement spacing is in inches unless otherwise noted.
4. Steps - None required where "H" is less than 2'-6". Where "H" is 2'-6" or more, install steps with lowest rung 1'-0" above the floor and highest rung not more than 6" below bottom of lid. The distance between steps must not exceed 1'-0" and be uniform throughout the length of the wall. Place steps in the wall without an opening. Steps inserts may be substituted for the bar steps. Step inserts must comply with State Industrial Safety Requirements. See Revised Standard Plan RSP D74 for step details.
5. Pipe(s) can be placed in any wall. Adjacent to each side of the opening, place additional reinforcement equivalent to half the interupted main reinforcement. For larger pipes greater than or equal to 42" diameter, also add 4 diagonal bars, 1 bar each side. Bars must be the same size as the larger of the main vertical or horizontal bars. Extend bars one development length past the intersection with the adjacent diagonal bar, or where bars intersect mid thickness of adjacent wall bottom or top of non-continuous wall, bend ends as required into same plane.
6. Set inlet so that grate bars are parallel to direction of principal surface flow.
7. Curb section must match adjacent curb.
8. Except for inlets used as junction boxes, basin floors must have wood trowel finish and a minimum slope of 4:1, unless otherwise noted, from all directions toward outlet pipe by casting grout fill on top of the bottom slab. The additional volume to achieve the 4:1 slope may also be achieved by casting the bottom slab and fill as a composite concrete element.
9. See Standard Plans D77A and D77B for grate and frame details and weights of miscellaneous iron and steel.
10. See Standard Plans D78A and D78B for gutter depression details.
11. See Standard Plan A87A and Revised Standard Plan RSP A87B for curb and dike details.
12. Details shown apply to metal, concrete and plastic pipe(s).
13. The Contractor may use WWR instead of bar reinforcement. The ratio of bar reinforcement to WWR shall be based on the yield strength ratio.
14. Cast-in-place (CIP) inlets to be formed around all pipes/stubs intersecting the inlet, and concrete poured in one continuous operation.
15. Perimeter reinforcement must not be smaller than main bars and #4 and serves as a rigid frame to position and attach the required structural reinforcement and may be tack welded at outer corners when using ASTM A706 weldable bars.

DESIGN NOTES:

1. Design Specifications: AASHTO LRFD Bridge Design Specifications, 6th edition with 2012 Interims and Errata and CA Amendments.
2. Live Load (AASHTO LRFD 3.6.1.2):
   HL-93, consists of design truck or tandem, and design lane load.
   Dynamic Load Allowance, IM = 33%
   Multiple Presence Factor, m = 1.0
   Design lane load was excluded in Top Slab design.
   A wheel load of 8 kips without impact factor was used for top slabs that are above a curb.
3. Earth Load:
   Vertical pressure = 140 pcf
   Lateral pressure:
   = 100 pcf for walls with flat embankment
   = 140 pcf For walls with slope embankment, 1.5:1 Max
4. Downdrag: ϕ = 34°and γ_E = 120 pcf.
5. Buoyancy: γ_W = 62.4 pcf to finished grade
6. Reinforced Concrete: f'c = 3.6 ksi, fy = 60.0 ksi.
7. Soil pressures shown are factored per AASHTO LRFD and include self-weight, live load and downdrag.

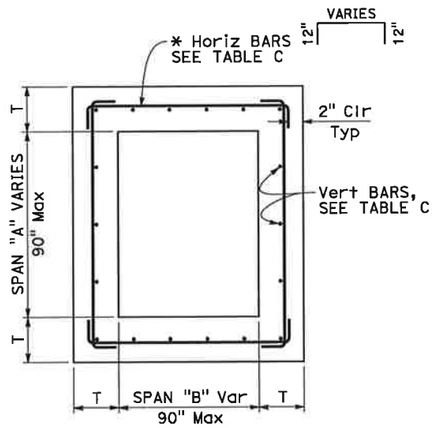

TYPICAL INLET PLAN

* ALTERNATIVE HORIZONTAL BARS

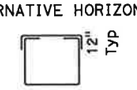

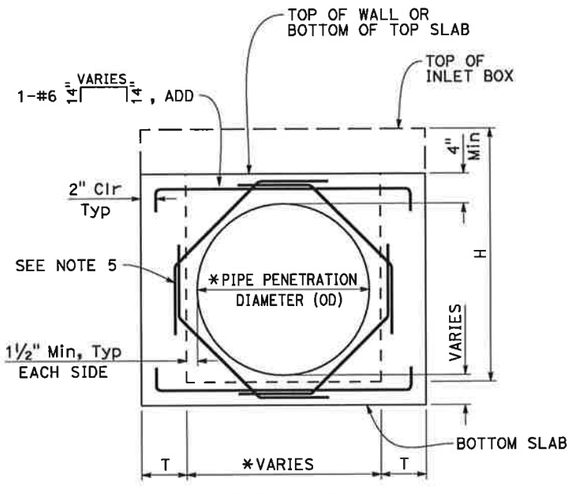

TYPICAL WALL
W/ PIPE OPENING

* SEE "SKEWED PIPE PLAN"

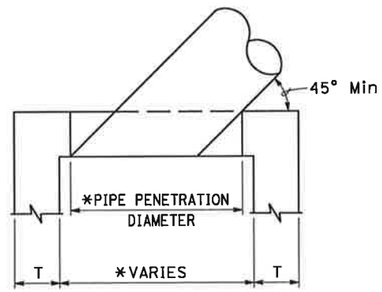

SKEWED PIPE PLAN

* ADJUST PIPE PENETRATION AND BOX WIDTH FOR SKEWED PIPES.

STATE OF CALIFORNIA
DEPARTMENT OF TRANSPORTATION

CIP DRAINAGE INLET NOTES

NO SCALE

RSP D72F DATED JULY 15, 2016 SUPPLEMENTS THE STANDARD PLANS BOOK DATED 2015.

REVISED STANDARD PLAN RSP D72F

2015 REVISED STANDARD PLAN RSP D72F

6-20-16

© 2016 California Department of Transportation
All Rights Reserved

dist	COUNTY	ROUTE	POST MILES TOTAL PROJECT	SHEET No.	TOTAL SHEETS
04	SCL	101,237	45.2/45.8 2.7/3.3	601	736

REGISTERED CIVIL ENGINEER

July 15, 2016
PLANS APPROVAL DATE

REGISTERED PROFESSIONAL ENGINEER
Carl M. Duan
No. C59976
Exp. 6-30-18
CIVIL
STATE OF CALIFORNIA

THE STATE OF CALIFORNIA OR ITS OFFICERS OR AGENTS SHALL NOT BE RESPONSIBLE FOR THE ACCURACY OR COMPLETENESS OF SCANNED COPIES OF THIS PLAN SHEET.

TO ACCOMPANY PLANS DATED _____

2015 REVISED STANDARD PLAN RSP D72G

TABLE A - CONCRETE QUANTITIES

TYPE	H=3'-0" TO 8'-0"		H=8'-1" TO 20'-0"	
	H=3'-0" (CY)	ADDITIONAL CONCRETE PER FOOT (CY)	H=8'-1" (CY)	ADDITIONAL CONCRETE PER FOOT (CY)
G1	0.95	0.220	SEE NOTE 2	SEE NOTE 2
G2*	2.00	0.411	5.11	0.525
G3	1.03	0.220	SEE NOTE 2	SEE NOTE 2
G4 (TYPE 18)*	2.02	0.411	5.14	0.525
G4 (TYPE 24)*	1.99	0.411	5.10	0.525
G5	1.02	0.220	SEE NOTE 2	SEE NOTE 2
G6	1.04	0.220	SEE NOTE 2	SEE NOTE 2
OS	1.53	0.278	5.08	0.504
OL7	2.06	0.278	6.17	0.566
OL10	2.85	0.278	6.85	0.566
OL14	3.81	0.278	7.78	0.566
OL21	5.71	0.278	9.62	0.566
GOL7	2.48	0.313	6.89	0.630
GOL10	3.41	0.313	7.85	0.630
GT1	1.72	0.248	SEE NOTE 2	SEE NOTE 2
GT2	2.93	0.530	7.73	0.762
GT3	1.74	0.348	SEE NOTE 2	SEE NOTE 2
GT4	2.83	0.530	7.62	0.762
GO	1.26	0.245	4.90	0.506
GDO	1.74	0.322	6.33	0.647

* Quantities are based on the minimum interior dimensions.

TABLE B - REINFORCEMENT QUANTITIES

TYPE	H=3'-0" TO 8'-0"		H=8'-1" TO 20'-0"	
	H=3'-0" (LB)	ADDITIONAL REINFORCEMENT PER FOOT (LB)	H=8'-1" (LB)	ADDITIONAL REINFORCEMENT PER FOOT (LB)
G1	118	22.20	SEE NOTE 2	SEE NOTE 2
G2*	729	86.48	1794	171.79
G3	118	22.20	SEE NOTE 2	SEE NOTE 2
G4 (TYPE 18)*	647	86.48	1675	171.79
G4 (TYPE 24)*	647	86.48	1675	171.79
G5	118	22.20	SEE NOTE 2	SEE NOTE 2
G6	118	22.20	SEE NOTE 2	SEE NOTE 2
OS	245	49.88	1057	120.77
OL7	458	50.53	1324	126.75
OL10	729	50.53	1595	126.75
OL14	982	50.53	1849	126.75
OL21	1453	50.53	2320	126.75
GOL7	644	83.57	1969	148.79
GOL10	883	83.57	2208	148.79
GT1	486	96.91	SEE NOTE 2	SEE NOTE 2
GT2	1040	117.08	2543	233.37
GT3	486	96.91	SEE NOTE 2	SEE NOTE 2
GT4	1001	117.08	2556	237.88
GO	308	32.44	1013	96.56
GDO	519	57.09	1654	165.66

* Quantities are based on the minimum interior dimensions.

TABLE D

INLET	CURB USED IN QUANTITIES
G1	-
G2	-
G3	A1-6
G4 (Type 18)	A1-6
G4 (Type 24)	A1-6
G5	B1-4
G6	½E
OS	-
OL7	-
OL10	-
OL14	-
OL21	-
GOL7	-
GOL10	-
GT1	D-6
GT2	E
GT3	A2-8
GT4	A2-8
GO	-
GDO	-

TABLE C - WALL REINFORCEMENT

TYPE	H≤8 (T=6",UON)		8<H≤20 (T=11",UON)	
	HORIZ	VERTICAL	HORIZ	VERTICAL
OS	#4 @ 8	#4 @ 6	#5 @ 6	#6 @ 4.5
OL	#4 @ 6	#4 @ 6	#5 @ 6	#6 @ 4.5
GOL	#5 @ 6	#5 @ 8	#6 @ 5	#6 @ 4.5
G1 (H≤6-6")	#3 @ 6	#3 @ 6	-	-
G2	T=9" #5 @ 5	#5 @ 5	T=11" #6 @ 4	#6 @ 4.5
G3 (H≤6-6")	#3 @ 6	#3 @ 6	-	-
G4	T=9" #5 @ 5	#5 @ 5	T=11" #6 @ 4	#6 @ 4.5
G5 (H≤6-6")	#3 @ 6	#3 @ 6	-	-
G6 (H≤6-6")	#3 @ 6	#3 @ 6	-	-
GT1 (H≤6-6")	#5 @ 6	#5 @ 6	-	-
GT2	T=8" #5 @ 6	#5 @ 6	#6 @ 4	#6 @ 4.5
GT3 (H≤6-6")	#5 @ 6	#5 @ 6	-	-
GT4	T=8" #5 @ 6	#5 @ 6	#6 @ 4	#6 @ 4.5
GO	#4 @ 9	#4 @ 6	#4 @ 6	#6 @ 4.5
GDO	#4 @ 6	#4 @ 6	#5 @ 4	#6 @ 4.5

TABLE E

SOIL PRESSURE BELOW BASE SLAB (ksf)		
TYPE	H=8'-0"	8'-0"< H ≤20'-0"
OS	2.93	5.56
OL*	2.93	5.56
GOL*	2.50	5.06
G1	3.67	-
G2	2.99	5.91
G3	3.67	-
G4	2.99	5.91
G5	3.67	-
G6	3.67	-
GT1	3.66	-
GT2	3.91	6.07
GT3	3.86	-
GT4	3.91	6.07
GO	3.42	6.11
GDO	2.52	6.95

* Main Box

NOTES:

1. No deduction or adjustment was made to the quantities of concrete and reinforcement for pipe openings, floor alternatives or curb type.
2. Maximum allowable height is 6'-6".
3. Quantities are approximate and for design purposes only.
4. Design is based on envelope of level and sloped ground.

STATE OF CALIFORNIA
DEPARTMENT OF TRANSPORTATION

CIP DRAINAGE INLET TABLES

NO SCALE

RSP D72G DATED JULY 15, 2016 SUPPLEMENTS THE STANDARD PLANS BOOK DATED 2015.

REVISED STANDARD PLAN RSP D72G

6-20-16

© 2016 California Department of Transportation
All Rights Reserved

Dist	COUNTY	ROUTE	POST MILES TOTAL PROJECT	SHEET No.	TOTAL SHEETS
04	SCL	101,237	45.2/45.8 2.7/3.3	602	736

REGISTERED CIVIL ENGINEER

July 15, 2016
PLANS APPROVAL DATE

Carl M. Duan
No. C59976
Exp. 6-30-18
CIVIL
REGISTERED PROFESSIONAL ENGINEER
STATE OF CALIFORNIA

THE STATE OF CALIFORNIA OR ITS OFFICERS OR AGENTS SHALL NOT BE RESPONSIBLE FOR THE ACCURACY OR COMPLETENESS OF SCANNED COPIES OF THIS PLAN SHEET.

TO ACCOMPANY PLANS DATED _____

2015 REVISED STANDARD PLAN RSP D73A

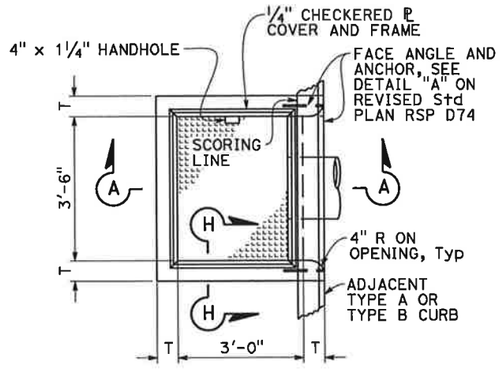

PLAN
TYPE OS

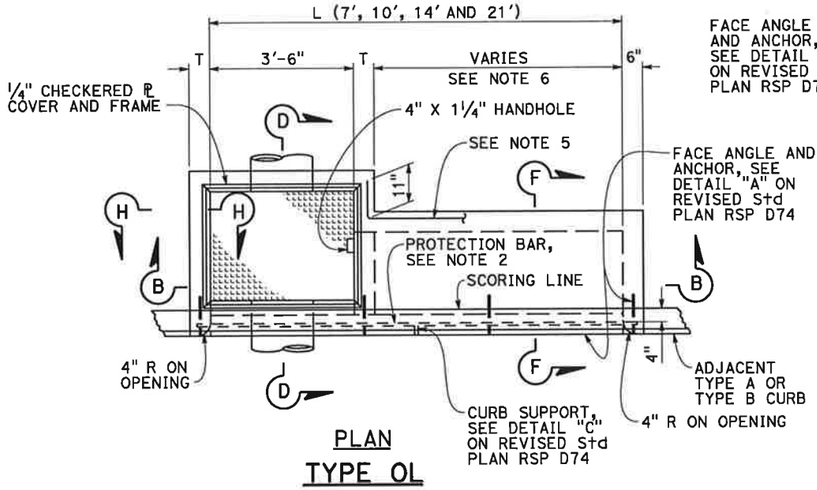

PLAN
TYPE OL

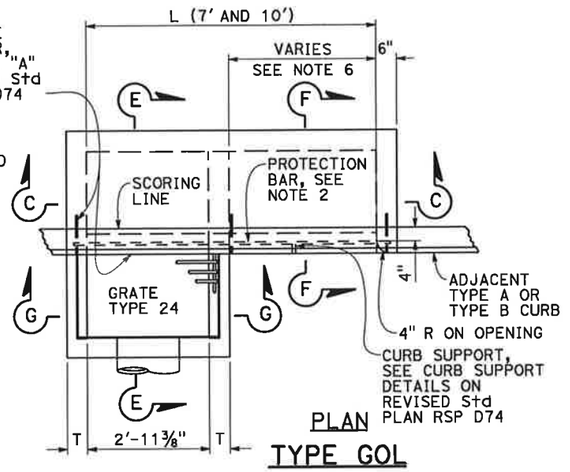

PLAN
TYPE GOL

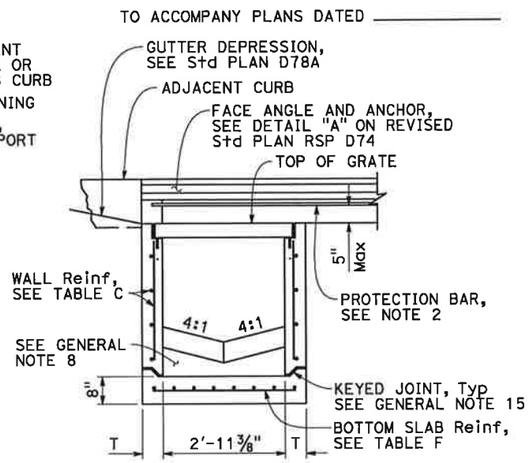

SECTION G-G

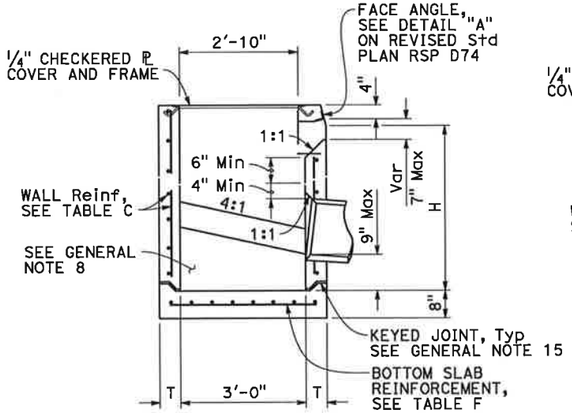

SECTION A-A

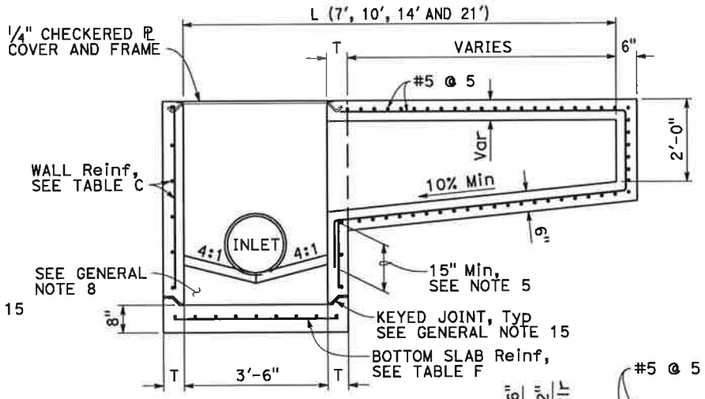

SECTION B-B

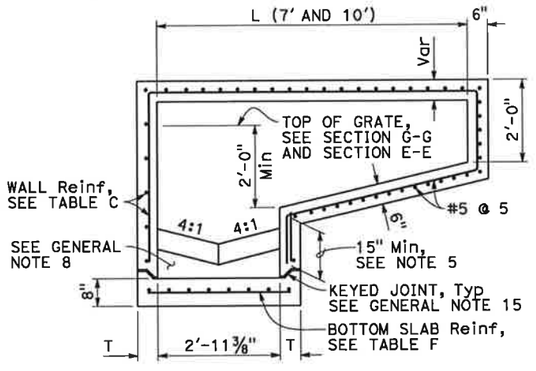

SECTION C-C

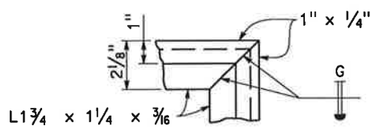

COVER FRAME
TYPICAL EACH CORNER
(CHECKERED ℄ COVER NOT SHOWN)

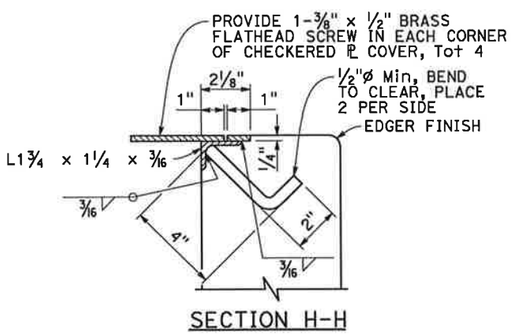

SECTION H-H

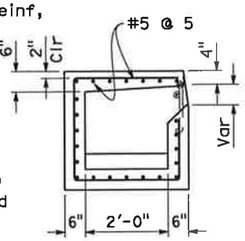

SECTION F-F
SEE NOTE 5

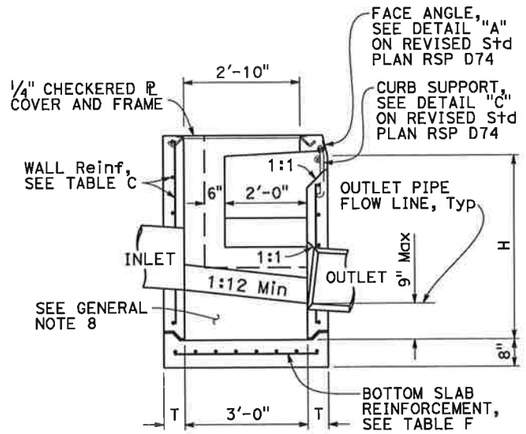

SECTION D-D

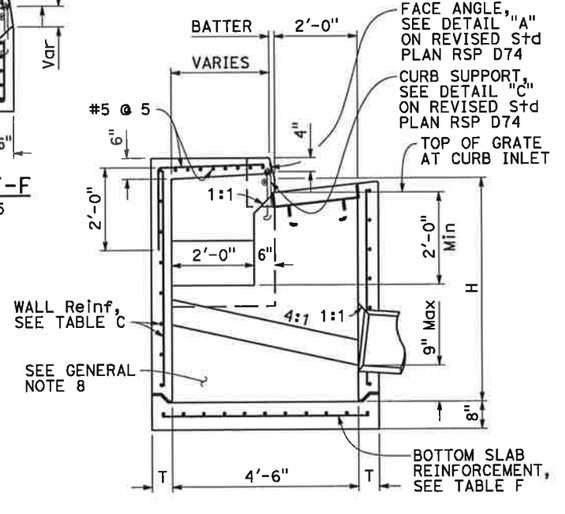

SECTION E-E

NOTES:

1. See Revised Standard Plan RSP D73F for General Notes and additional details. See Revised Standard Plan RSP D73G for tables, wall thickness "T" and quantities.
2. When shown on the project plans, place a ¾"ø plain round protection bar horizontally across the length of the opening and bend back 4" into the inlet wall on each side.
3. Complete joint penetration butt welds may be substituted for the fillet welds on all anchors.
4. Standard square, hexagon, round or equivalent headed anchors may be substituted for the right angle hooks on the anchors shown on this plan.
5. Extend all horizontal bars from inlet extensions into adjacent concrete elements of main inlet box a minimum of 15". Where shown, bend horizontal bars into box. If necessary rotate bars to maintain 2" clear coverage.
6. Height of curb opening will vary with the type of curb and the depth of the local depression.

STATE OF CALIFORNIA
DEPARTMENT OF TRANSPORTATION

PRECAST DRAINAGE INLETS TYPES OS, OL AND GOL

NO SCALE

RSP D73A DATED JULY 15, 2016 SUPERSEDES STANDARD PLAN D73A DATED OCTOBER 30, 2015 - PAGE 174 OF THE STANDARD PLANS BOOK DATED 2015.

REVISED STANDARD PLAN RSP D73A

6-28-16

© 2017 California Department of Transportation
All Rights Reserved

Dist	COUNTY	ROUTE	POST MILES TOTAL PROJECT	SHEET No.	TOTAL SHEETS
04	SCL	101,237	45.2/45.8 2.7/3.3	603	736

REGISTERED CIVIL ENGINEER

July 21, 2017
PLANS APPROVAL DATE

Carl M. Duan, No. C59976, Exp. 6-30-18, CIVIL, STATE OF CALIFORNIA

THE STATE OF CALIFORNIA OR ITS OFFICERS OR AGENTS SHALL NOT BE RESPONSIBLE FOR THE ACCURACY OR COMPLETENESS OF SCANNED COPIES OF THIS PLAN SHEET.

TO ACCOMPANY PLANS DATED _____

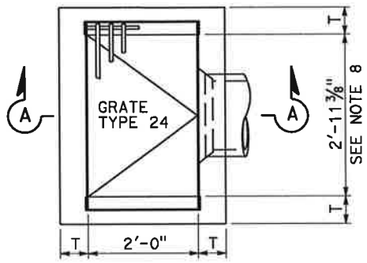

PLAN
TYPE G1

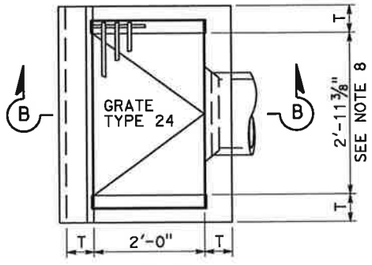

PLAN
TYPE G3

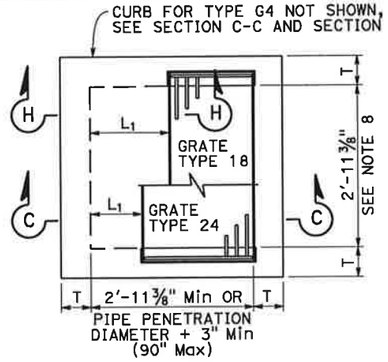

PLAN
STANDARD TYPE G2 OR G4
(INTEGRAL TOP ALTERNATIVE)
FOR "L" AND "T" VALUES, SEE TABLE 1

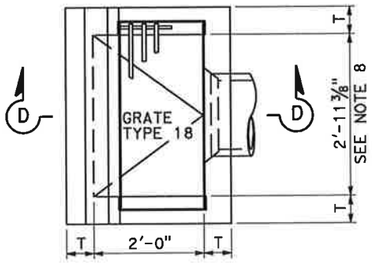

PLAN
TYPE G5

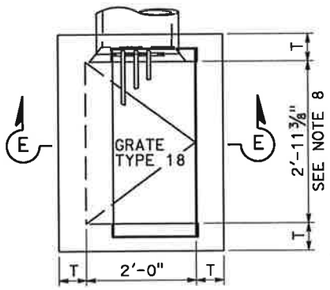

PLAN
TYPE G6

NOTES:

1. For notes and Table 2, See Revised Standard Plan RSP D73C.
2. For L_1 or L_2 greater than 2'-10", see Table 1 for wall thickness dimension and see Table C in Revised Standard Plan RSP D73G for reinforcement. Otherwise, see Table C in Revised Standard Plan RSP D73G for wall thickness and reinforcement.

TABLE 1	
	T
L_1 OR L_2 > 2'-10"	12"

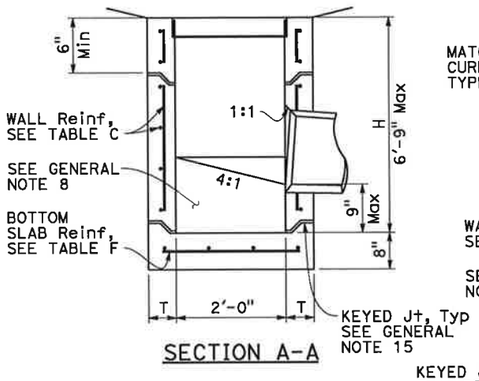

SECTION A-A

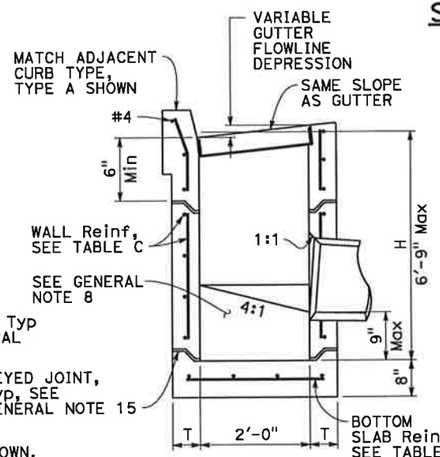

SECTION B-B

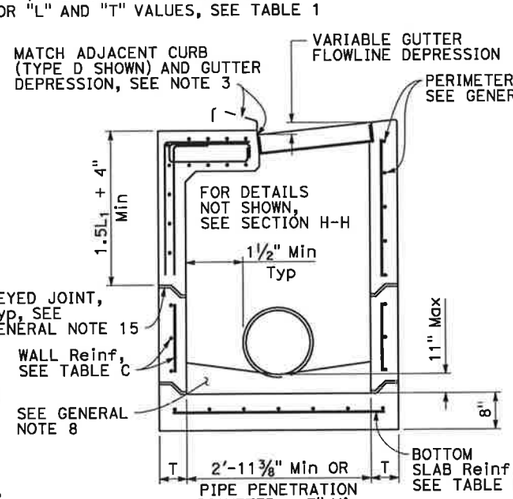

SECTION C-C
FOR "L_1", "L_2" AND "T_1" VALUES, SEE "TABLE 1"

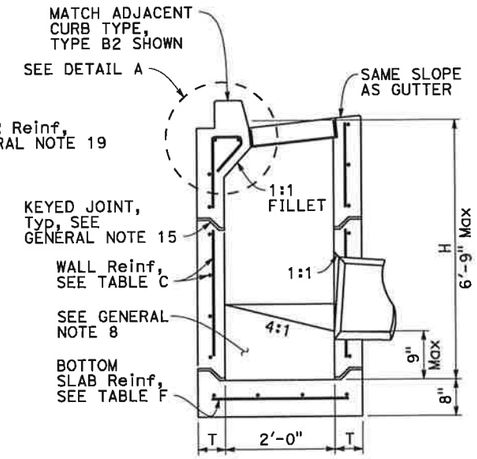

SECTION D-D

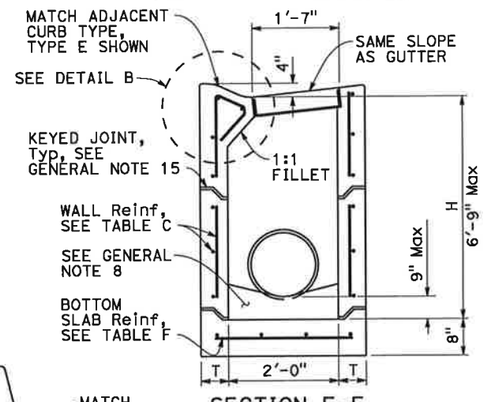

SECTION E-E

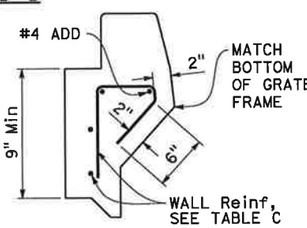

DETAIL A

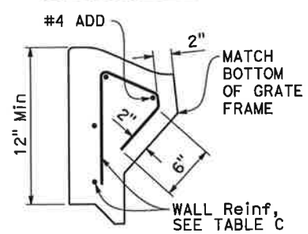

DETAIL B

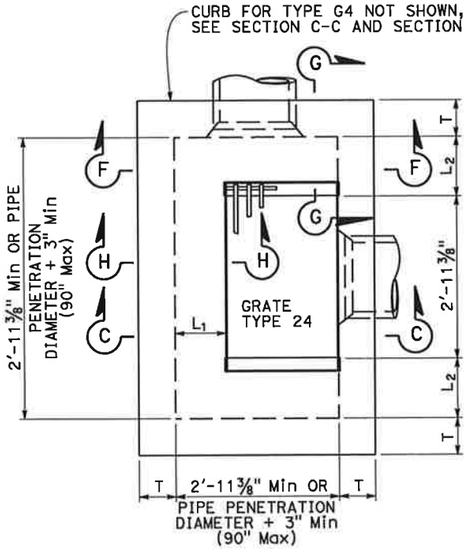

PLAN
EXPANDED
TYPE G2 OR G4

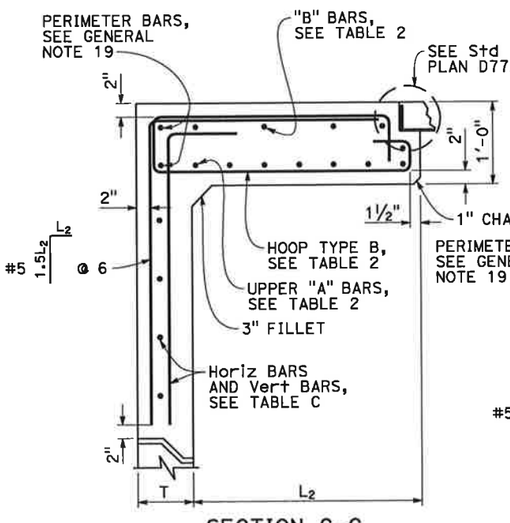

SECTION G-G

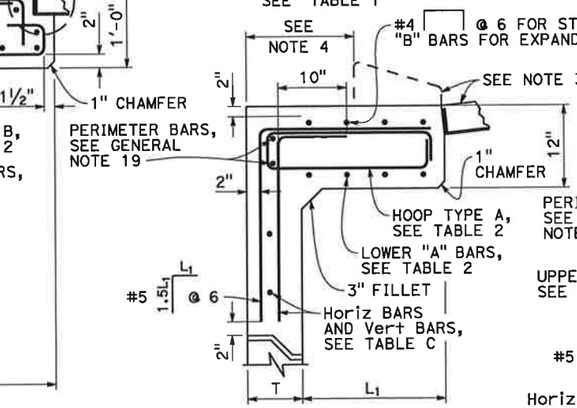

SECTION H-H

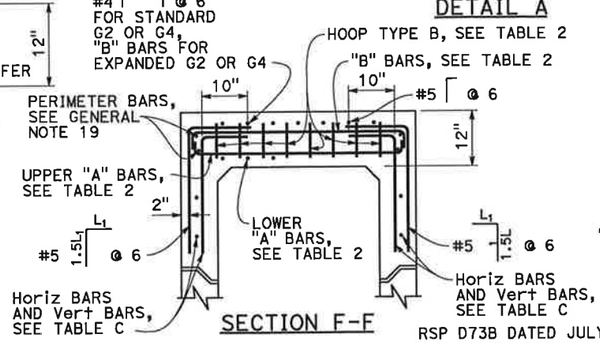

SECTION F-F

STATE OF CALIFORNIA
DEPARTMENT OF TRANSPORTATION

PRECAST DRAINAGE INLETS TYPES G1, G2, G3, G4, G5 AND G6

NO SCALE

RSP D73B DATED JULY 21, 2017 SUPERSEDES RSP D73B DATED JULY 15, 2016 THAT SUPPLEMENTS THE STANDARD PLANS BOOK DATED 2015.

REVISED STANDARD PLAN RSP D73B

2015 REVISED STANDARD PLAN RSP D73B

5-25-17

© 2017 California Department of Transportation
All Rights Reserved

Dist	COUNTY	ROUTE	POST MILES TOTAL PROJECT	SHEET No.	TOTAL SHEETS
04	SCL	101,237	45.2/45.8 2.7/3.3	604	736

REGISTERED CIVIL ENGINEER

July 21, 2017
PLANS APPROVAL DATE

Carl M. Duan No. C59976 Exp. 6-30-18 CIVIL — REGISTERED PROFESSIONAL ENGINEER — STATE OF CALIFORNIA

THE STATE OF CALIFORNIA OR ITS OFFICERS OR AGENTS SHALL NOT BE RESPONSIBLE FOR THE ACCURACY OR COMPLETENESS OF SCANNED COPIES OF THIS PLAN SHEET.

TO ACCOMPANY PLANS DATED _____

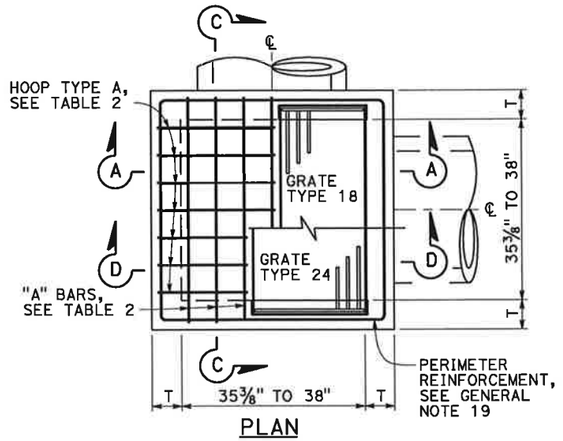

PLAN

STANDARD TYPE G2 OR G4

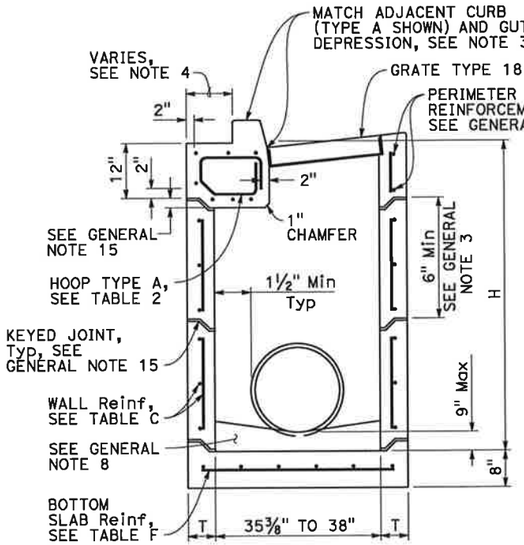

SECTION A-A
(WITH G4 TOP)

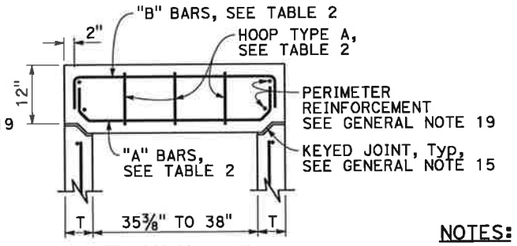

SECTION C-C

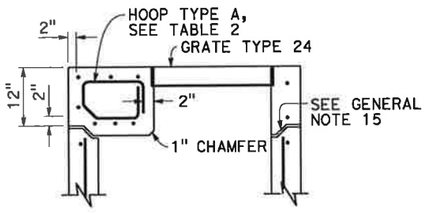

SECTION D-D
(WITH G2 TOP)

NOTES:

1. See Revised Standard Plan RSP D73F for General Notes and additional details. See Revised Standard Plan RSP D73G for additional tables, wall thickness "T" and quantities.
2. Type G4 inlet can use Grate Type 18 or 24. Type G2 inlet uses Grate Type 24.
3. G4 inlet details are the same as the G2 with the addition of a curb and sloped grate that matches the adjacent curb and gutter depression.
4. Dimension will vary with different grates, curb types, box width and wall thickness.
5. 2" unless inlet is expanded in the Span "A" direction, then clearance is 2" plus the diameter of the lower "A" bar.
6. See Revised Standard Plan RSP D73B for integral top slab alternative.
7. Interior dimension of lower sections of inlet for Types G2 and G4 may be 3'-0" provided top section conforms to the requirements for frame and grate types on Standard Plan D77A. The wall thickness of top sections may transition from "T" to "T"+5/16" to meet this requirement. Minimum height of thickened wall shall = "T".

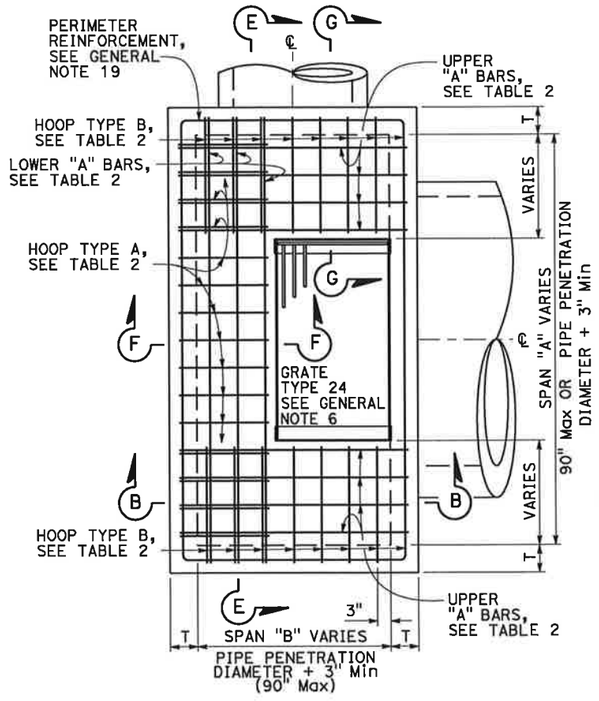

PLAN

EXPANDED TYPE G2 OR G4

(TOP REBAR NOT SHOWN)

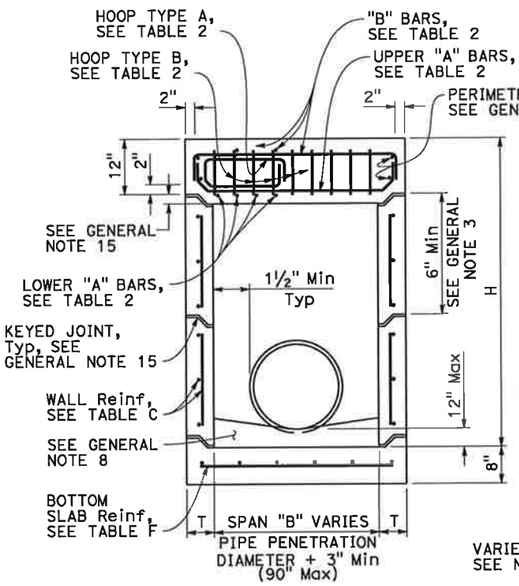

SECTION B-B
(WITH G2 TOP)

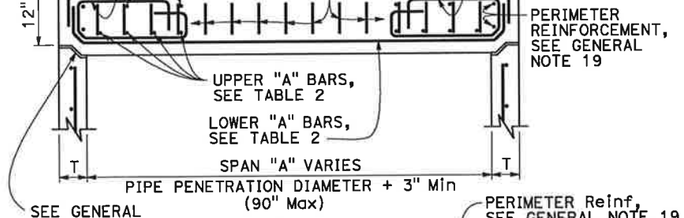

SECTION E-E

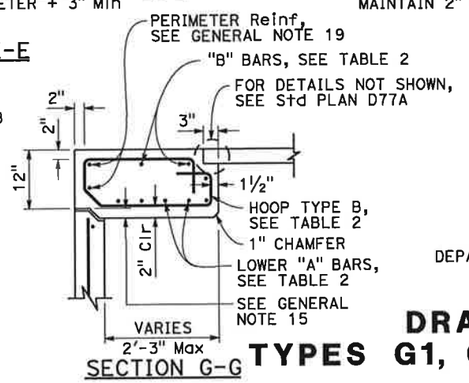

SECTION G-G

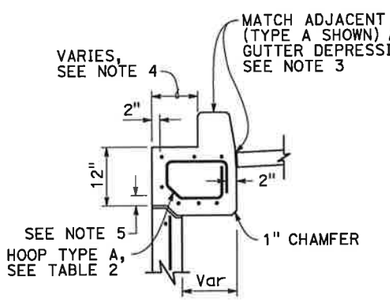

SECTION F-F
(WITH G4 TOP)

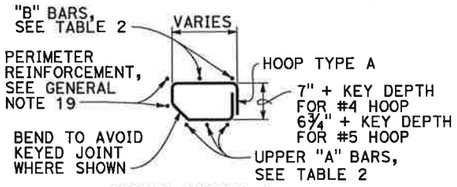

HOOP TYPE A

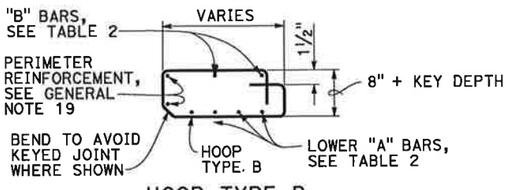

HOOP TYPE B

TABLE 2 - TOP SLAB REINFORCEMENT

16 BAR DIAMETERS — "A" & "B" BARS VARIES — BEND TO AVOID KEYED JOINT WHERE SHOWN

	W/ CURB	W/O CURB
"A" BARS	#4 @ 5 (2 BARS Min)	#5 @ 5 (3 BARS Min)
"B" BARS	#4 @ 10 (2 BARS Min)	#4 @ 10 (2 BARS Min)
HOOPS ("A" & "B")	#4 @ 5	#5 @ 5

ROTATE "A" AND "B" BARS SO HOOKED ENDS WILL MAINTAIN 2" CLEAR COVERAGE.

STATE OF CALIFORNIA
DEPARTMENT OF TRANSPORTATION

PRECAST DRAINAGE INLETS TYPES G1, G2 G3, G4, G5 AND G6

NO SCALE

RSP D73C DATED JULY 21, 2017 SUPERSEDES RSP D73C
DATED JULY 15, 2016 THAT SUPPLEMENTS THE STANDARD PLANS BOOK DATED 2015.

REVISED STANDARD PLAN RSP D73C

2015 REVISED STANDARD PLAN RSP D73C

5-24-17

© 2016 California Department of Transportation
All Rights Reserved

Dist	COUNTY	ROUTE	POST MILES TOTAL PROJECT	SHEET No.	TOTAL SHEETS
04	SCL	101,237	45.2/45.8 2.7/3.3	605	736

REGISTERED CIVIL ENGINEER

July 15, 2016
PLANS APPROVAL DATE

Carl W. Duan
No. C59976
Exp. 6-30-18
CIVIL
STATE OF CALIFORNIA
REGISTERED PROFESSIONAL ENGINEER

THE STATE OF CALIFORNIA OR ITS OFFICERS OR AGENTS SHALL NOT BE RESPONSIBLE FOR THE ACCURACY OR COMPLETENESS OF SCANNED COPIES OF THIS PLAN SHEET.

TO ACCOMPANY PLANS DATED _____

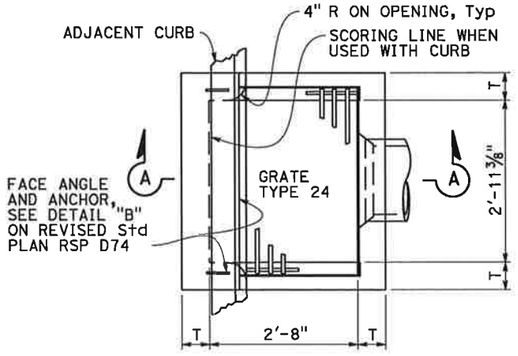

PLAN
TYPE GO

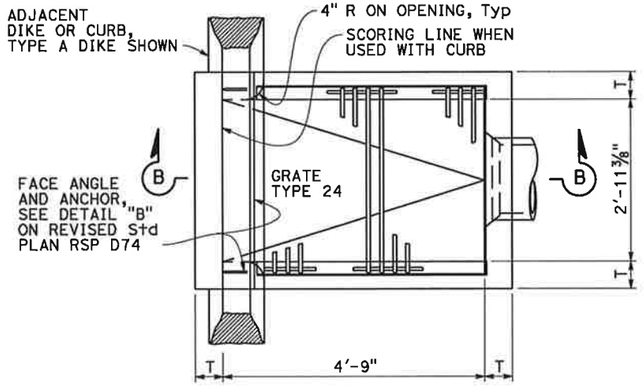

PLAN
TYPE GDO

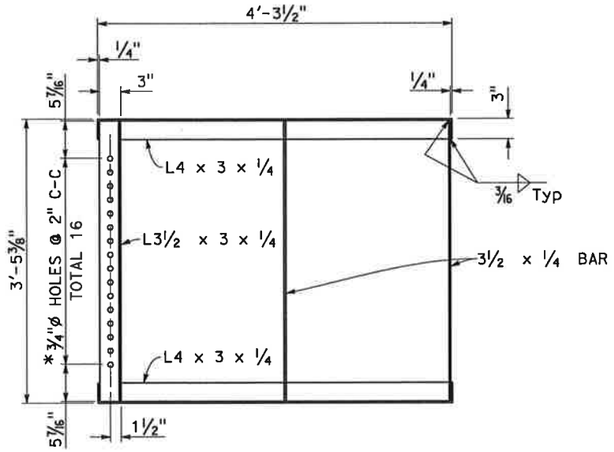

GRATE FRAME FOR TYPE GDO INLET

* HOLES REQUIRED ONLY WITH TRASH RACK

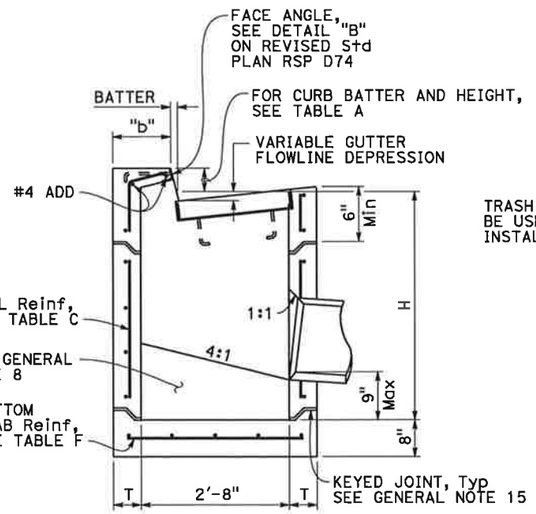

SECTION A-A

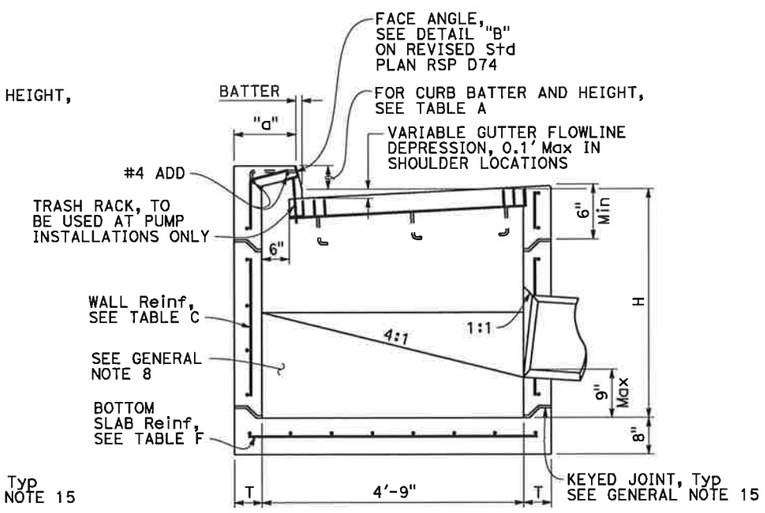

SECTION B-B

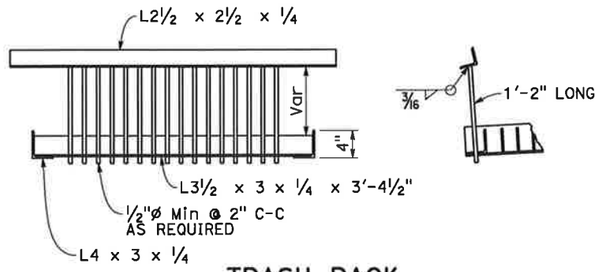

TRASH RACK
FOR USE WITH PUMP INSTALLATION

TABLE A				
CURB TYPE	NORMAL CURB HEIGHT	CURB BATTER	"a" DIMENSION	"b" DIMENSION
A1-6	6"	1 1/2"	T+7 1/2"	T+6 1/2"
A1-8	8"	2"	T+7"	T+6"
B1-6	6"	4"	T+5"	T+4"
TYPE A DIKE	6"	3"	T+6"	T+5"

Height of curb opening will vary with the type of curb and the depth of the local depression.

NOTES:

1. See Revised Standard Plan RSP D73F for General Notes and additional details. See Revised Standard Plan RSP D73G for tables, wall thickness "T" and quantities.
2. Where shown on the project plans, place a 3/4"* plain round protection bar horizontally across the length of the opening and bend back 4" into the inlet wall on each side.
3. Complete joint penetration butt welds may be substituted for the fillet welds on all anchors.
4. Standard square, hexagon, round or equivalent headed anchors may be substituted for the right angle hooks on the anchors shown on this plan.

STATE OF CALIFORNIA
DEPARTMENT OF TRANSPORTATION

PRECAST DRAINAGE INLETS TYPES GO AND GDO

NO SCALE

RSP D73E DATED JULY 15, 2016 SUPPLEMENTS THE STANDARD PLANS BOOK DATED 2015.

REVISED STANDARD PLAN RSP D73E

2015 REVISED STANDARD PLAN RSP D73E

6-20-16

© 2016 California Department of Transportation
All Rights Reserved

Dist	COUNTY	ROUTE	POST MILES TOTAL PROJECT	SHEET No.	TOTAL SHEETS
04	SCL	101,237	45.2/45.8 2.7/3.3	606	736

REGISTERED CIVIL ENGINEER

July 15, 2016
PLANS APPROVAL DATE

REGISTERED PROFESSIONAL ENGINEER — Carl M. Duan, No. C59976, Exp. 6-30-18, CIVIL, STATE OF CALIFORNIA

THE STATE OF CALIFORNIA OR ITS OFFICERS OR AGENTS SHALL NOT BE RESPONSIBLE FOR THE ACCURACY OR COMPLETENESS OF SCANNED COPIES OF THIS PLAN SHEET.

TO ACCOMPANY PLANS DATED _____

GENERAL NOTES:

1. "H" is measured from top of bottom slab to the normal gutter grade line undepressed at the curb face.
2. For "T" wall thickness and reinforcement, see Table C on Revised Standard Plan RSP D73G.
3. Wall reinforcement must be placed at the center of wall thickness with horizontal bars placed on the exterior face. Bottom slab concrete cover must be 3" clear on the interior side face unless otherwise noted. Top slab concrete cover must be 2" clear on the exterior face unless otherwise noted. Short independent wall sections or height adjustment rings 6" to 24" high must have a minimum of two #4 horizontal bars. Reinforcement spacing is in inches unless otherwise noted.
4. Steps - None required where "H" is less than 2'-6". Where "H" is 2'-6" or more, install steps with lowest rung 1'-0" above the floor and highest rung not more than 6" below bottom of lid. The distance between steps must not exceed 1'-0" and be uniform throughout the length of the wall. Place steps in the wall without an opening. Steps inserts may be substituted for the bar steps. Step inserts must comply with State Industrial Safety Requirements. See Revised Standard Plan RSP D74 for step details.
5. Pipe(s) can be placed in any wall. Adjacent to each side of the opening, place additional reinforcement equivalent to half the interupted main reinforcement. For larger pipes greater than or equal to 42" diameter, also add 4 diagonal bars, 1 bar each side. Bars must be the same size as the larger of the main vertical or horizontal bars. Extend bars one development length past the intersection with the adjacent diagonal bar, or where bars intersect mid thickness of adjacent wall bottom or top of non-continuous wall, bend ends as required into same plane.
6. Set inlet so that grate bars are parallel to direction of principal surface flow.
7. Curb section must match adjacent curb.
8. Except for inlets used as junction boxes, basin floors must have wood trowel finish and a minimum slope of 4:1, unless otherwise noted, from all directions toward outlet pipe by casting grout on top of the bottom slab. Grout must be placed prior to backfill.
9. See Standard Plans D77A and D77B for grate and frame details and weights of miscellaneous iron and steel.
10. See Standard Plans D78A and D78B for gutter depression details.
11. See Standard Plan A87A and Revised Standard Plan RSP A87B for curb and dike details.
12. Details shown apply to metal, concrete and plastic pipe(s).
13. The Contractor may use WWR instead of bar reinforcement. The ratio of bar reinforcement to WWR shall be based on the yield strength ratio.
14. Seal precast inlets connection openings between wall and pipe with non-shrink grout or resilient connectors as specified in the Special Provisions. Precast inlets shall have mortared connections conforming to details for Type GCP Inlet shown on Standard Plan D75B. See Standard Specifications for mortar composition.
15. Where shown, provide precast inlets with separate top sections for final grade adjustment. Provide keyed joints with butyl rubber sealant between the top section and wall, multiple wall sections, and wall and bottom slab. Joint design may vary but must be 1" to 3" in depth. For tongue type joints, tongue down orientation is not allowed. For keyed joints, keyway up, keyway down or tongue up configurations are allowed. Only one key type is allowed for each drainage inlet.
16. Non-shrink grout can be used for upper most joint to facilitate final top grade adjustment.
17. Provide a level and firm sand bedding on which to place precast inlets. Extend sand bedding under all structure backfill.
18. For Integral Base, see Detail "A".
19. Perimeter reinforcement must not be smaller than main bars and #4 and serves as a rigid frame to position and attach the required structural reinforcement and may be tack welded at outer corners when using ASTM A706 weldable bars.
20. Inlet extensions may be cast in place after placement of main box and placement and compaction of backfill. Concrete strength must be 3.6 ksi minimum. All slab and wall thicknesses must be per Revised Standard Plan RSP D72A. All reinforcement shall extend a minimum of 24" from precast main inlet box.

DESIGN NOTES:

1. Design Specifications: AASHTO LRFD Bridge Design Specifications, 6th edition with 2012 Interims and Errata and CA Amendments.
2. Live Load (AASHTO LRFD 3.6.1.2):
   HL-93, consists of design truck or tandem, and design lane load.
   Dynamic Load Allowance, IM = 33%
   Multiple Presence Factor, m = 1.0
   Design lane load was excluded in Top Slab design.
   A wheel load of 8 kips without impact factor was used for top slabs that are above a curb.
3. Earth Load:
   Vertical pressure = 140 pcf
   Lateral pressure:
   = 100 pcf for walls with flat embankment
   = 140 pcf For walls with slope embankment, 1.5:1 Max
4. Downdrag: ϕ = 34° and γ_E = 120 pcf.
5. Buoyancy: γ_W = 62.4 pcf to finished grade.
6. Reinforced Concrete: f'c = 5.0 ksi, fy = 60.0 ksi.
7. Tables are based on the worst case from the level ground and sloped ground.
8. Soil pressures shown are factored per AASHTO LRFD and include self-weight, live load and downdrag.

SPAN "A" OR "B" (IN)	L (IN)
<38	34
38 TO 50	40
51 TO 64	47
65 TO 76	53
77 TO 90	60

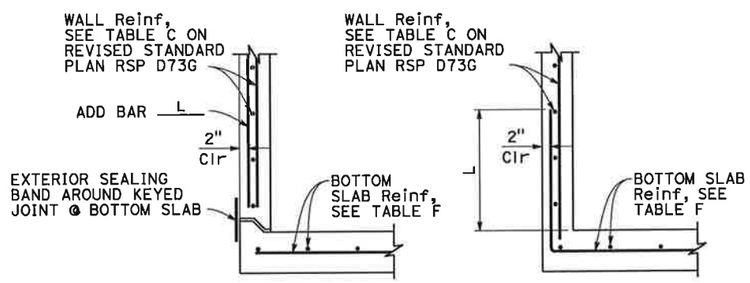

BASE WITH KEYED JOINT — INTEGRAL BASE

DETAIL "A"

FOR INTEGRAL BASE, CLEARANCE BETWEEN PIPE PENETRATION AND BASE SLAB MAY BE AS SHOWN IN CIP ALTERNATIVE STANDARD PLAN SHEET.

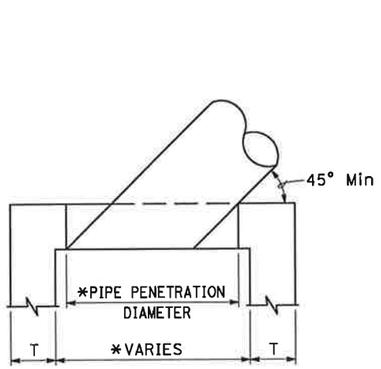

SKEWED PIPE PLAN

* ADJUST PIPE PENETRATION AND BOX WIDTH FOR SKEWED PIPES.

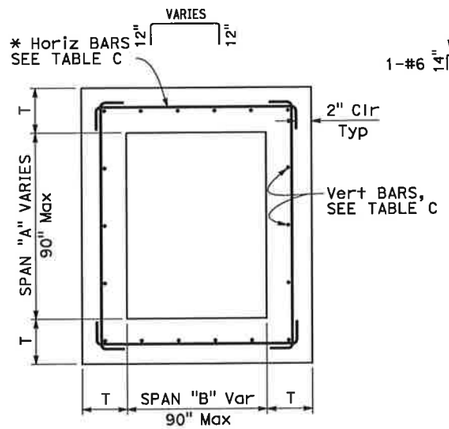

TYPICAL INLET PLAN

* ALTERNATIVE HORIZONTAL BARS

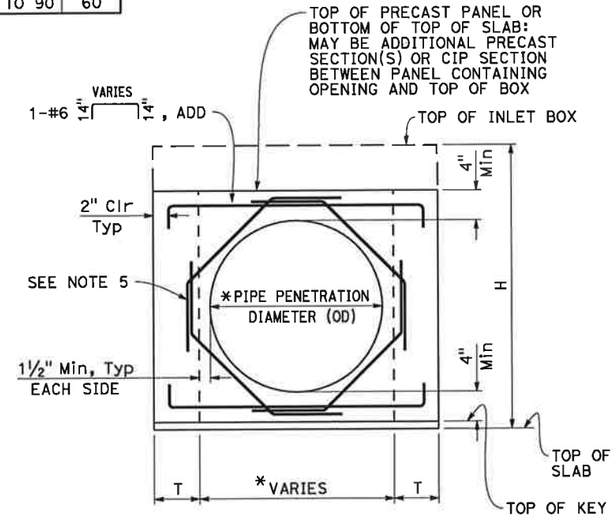

BASE WITH KEYED JOINT

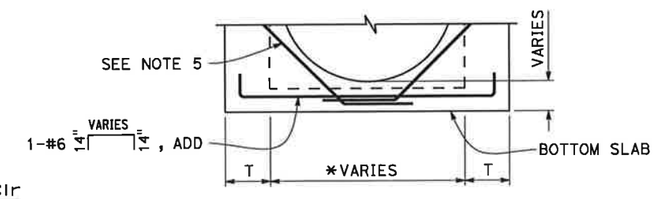

INTEGRAL BASE

FOR DETAILS NOT SHOWN, SEE "BASE WITH KEYED JOINT"

TYPICAL WALL W/ PIPE OPENING

* SEE "SKEWED PIPE PLAN"

STATE OF CALIFORNIA
DEPARTMENT OF TRANSPORTATION

PRECAST DRAINAGE INLET NOTES

NO SCALE

RSP D73F DATED JULY 15, 2016 SUPPLEMENTS THE STANDARD PLANS BOOK DATED 2015.

REVISED STANDARD PLAN RSP D73F

2015 REVISED STANDARD PLAN RSP D73F

6-20-16

© 2016 California Department of Transportation
All Rights Reserved

Dist	COUNTY	ROUTE	POST MILES TOTAL PROJECT	SHEET No.	TOTAL SHEETS
04	SCL	101,237	45.2/45.8 2.7/3.3	607	736

REGISTERED CIVIL ENGINEER

July 15, 2016
PLANS APPROVAL DATE

REGISTERED PROFESSIONAL ENGINEER — Carl M. Duan No. C59976 Exp. 6-30-18 CIVIL — STATE OF CALIFORNIA

THE STATE OF CALIFORNIA OR ITS OFFICERS OR AGENTS SHALL NOT BE RESPONSIBLE FOR THE ACCURACY OR COMPLETENESS OF SCANNED COPIES OF THIS PLAN SHEET.

TO ACCOMPANY PLANS DATED _____

TABLE A - CONCRETE QUANTITIES

TYPE	H=3'-0" TO 8'-0"		H=8'-1" TO 20'-0"	
	H=3'-0" (CY)	ADDITIONAL CONCRETE PER FOOT (CY)	H=8'-1" (CY)	ADDITIONAL CONCRETE PER FOOT (CY)
G1	0.95	0.220	SEE NOTE 2	SEE NOTE 2
G2*	1.25	0.255	2.55	0.255
G3	1.06	0.220	SEE NOTE 2	SEE NOTE 2
G4 (TYPE 18)*	1.41	0.255	2.71	0.255
G4 (TYPE 24)*	1.36	0.255	2.65	0.255
G5	1.09	0.220	SEE NOTE 2	SEE NOTE 2
G6	1.14	0.220	SEE NOTE 2	SEE NOTE 2
OS	1.28	0.278	2.69	0.278
OL7	1.92	0.278	3.33	0.278
OL10	2.43	0.278	3.84	0.278
OL14	3.16	0.278	4.57	0.278
OL21	4.58	0.278	5.99	0.278
GOL7	2.36	0.313	4.04	0.434
GOL10	2.84	0.313	4.53	0.434
GT1	2.30	0.480	SEE NOTE 2	SEE NOTE 2
GT2	2.71	0.530	5.40	0.530
GT3	2.29	0.480	SEE NOTE 2	SEE NOTE 2
GT4	2.69	0.530	5.39	0.530
GO	1.25	0.245	2.37	0.245
GDO	1.64	0.322	3.37	0.446

* Quantities are based on the minimum interior dimensions.

TABLE B - REINFORCEMENT QUANTITIES

TYPE	H=3'-0" TO 8'-0"		H=8'-1" TO 20'-0"	
	H=3'-0" (LB)	ADDITIONAL REINFORCEMENT PER FOOT (LB)	H=8'-1" (LB)	ADDITIONAL REINFORCEMENT PER FOOT (LB)
G1	88.5	21.90	SEE NOTE 2	SEE NOTE 2
G2*	151.5	24.54	277.4	38.64
G3	92.9	21.90	SEE NOTE 2	SEE NOTE 2
G4 (TYPE 18)*	134.4	24.54	260.3	38.64
G4 (TYPE 24)*	125.1	24.54	251.0	38.64
G5	92.5	21.90	SEE NOTE 2	SEE NOTE 2
G6	92.5	21.90	SEE NOTE 2	SEE NOTE 2
OS	145.8	35.57	327.8	49.60
OL7	328.0	35.57	510.0	49.60
OL10	467.5	35.57	649.5	49.60
OL14	667.5	35.57	849.5	49.60
OL21	1056.1	35.57	1238.1	49.60
GOL7	474.7	45.17	706.8	74.02
GOL10	604.9	45.17	836.9	74.02
GT1	349.0	80.48	SEE NOTE 2	SEE NOTE 2
GT2	403.7	86.82	849.1	135.15
GT3	347.0	80.48	SEE NOTE 2	SEE NOTE 2
GT4	403.7	86.82	849.1	135.15
GO	99.8	23.75	221.7	37.46
GDO	208.8	46.22	446.2	75.61

* Quantities are based on the minimum interior dimensions.

TABLE D

INLET	CURB USED IN QUANTITIES
G1	-
G2	-
G3	A1-6
G4 (Type 18)	A1-6
G4 (Type 24)	A1-6
G5	B1-4
G6	½E
OS	-
OL7	-
OL10	-
OL14	-
OL21	-
GOL7	-
GOL10	-
GT1	D-6
GT2	E
GT3	A2-8
GT4	A2-8
GO	-
GDO	-

TABLE C - WALL REINFORCEMENT

TYPE	H ≤8'-0" (T=6", UON)			8'-0"< H ≤20'-0" (T=8", UON)		
	HORIZONTAL	VERTICAL	*ADD	HORIZONTAL	VERTICAL	*ADD
OS	#4@6	#3@8	#3@8	#4@4 (T=6")	#3@8	#3@8
OL	#4@6	#3@8	#3@8	#4@4 (T=6")	#3@8	#3@8
GOL	#4@5	#3@8	#3@8	#5@5	#3@6	#3@6
G1 (H ≤6'-9")	#4@9	#3@8	#3@8	-	-	-
G2 & G4 (a** ≤38")	#4@9	#3@8	#3@8	#4@5 (T=6")	#3@8	#3@8
G2 & G4 (38" < a** ≤50")	#4@6	#3@8	#3@8	#4@4 (T=6")	#3@8	#3@8
G2 & G4 (50" < a** ≤64")	#4@5	#3@8	#3@8	#5@5	#3@6	#3@6
G2 & G4 (64"< a** ≤76")	#5@7 (T=8")	#3@6	#3@6	#5@4	#3@6	#5@6
G2 & G4 (76" < a** ≤90")	#5@5 (T=8")	#3@6	#3@6	#5@3	#3@6	#5@6
G3 (H ≤6'-9")	#4@9	#3@8	#3@8	-	-	-
G5 (H ≤6'-9")	#4@9	#3@8	#3@8	-	-	-
G6 (H ≤6'-9")	#4@9	#3@8	#3@8	-	-	-
GT1 (H ≤6'-9")	#5@5 (T=8")	#3@6	#3@6	-	-	-
GT2	#5@5 (T=8")	#3@6	#3@6	#5@3	#3@6	#5@6
GT3 (H ≤6'-9")	#5@5 (T=8")	#3@6	#3@6	-	-	-
GT4	#5@5 (T=8")	#3@6	#3@6	#5@3	#3@6	#5@6
GO	#4@9	#3@8	#3@8	#4@5 (T=6")	#3@8	#3@8
GDO	#4@5	#3@8	#3@8	#5@5	#3@6	#3@6

* See Detail A on Revised Standard Plan RSP D73F for additional vertical bars at the base.
** a = Larger interior span

TABLE E

SOIL PRESSURE BELOW BASE SLAB (ksf)		
TYPE	H ≤8'-0"	8'-0"< H ≤20'-0"
OS	2.89	5.68
OL*	2.89	5.68
GOL*	2.36	4.93
G1 (H ≤6'-9")	3.51	-
G2 & G4 (a** ≤38")	2.96	5.79
G2 & G4 (38" < a** ≤50")	2.21	4.51
G2 & G4 (50" < a** ≤64")	3.19	4.89
G2 & G4 (64"< a** ≤76")	2.50	4.23
G2 & G4 (76" < a** ≤90")	2.04	3.56
G3 (H ≤6'-9")	3.51	-
G5 (H ≤6'-9")	3.51	-
G6 (H ≤6'-9")	3.51	-
GT1 (H ≤6'-9")	3.41	-
GT2	3.60	6.42
GT3 (H ≤6'-9")	3.41	-
GT4	3.60	6.42
GO	3.37	6.46
GDO	2.48	7.30

* Main Box
** a = Larger interior span

TABLE F

BASE SLAB REINFORCEMENT (T=8", UON)		
TYPE	H ≤8'-0"	8'-0"< H ≤20'-0"
OS	#4@8 (EW)	#4@5 (EW)
OL*	#4@8 (EW)	#4@5 (EW)
GOL*	#4@6 (EW)	#4@4 (EW)
G1 (H ≤6'-9")	#4@10 (EW)	-
G2 & G4 (a** ≤38")	#4@10 (EW)	#4@6 (EW)
G2 & G4 (38" < a** ≤50")	#4@8 (EW)	#4@5 (EW)
G2 & G4 (50" < a** ≤64")	#4@6 (EW)	#4@4 (EW)
G2 & G4 (64"< a** ≤76")	#4@5 (EW)	#4@3 (EW)
G2 & G4 (76" < a** ≤90")	#4@4 (EW)	#5@3 (EW)
G3 (H ≤6'-9")	#4@10 (EW)	-
G5 (H ≤6'-9")	#4@10 (EW)	-
G6 (H ≤6'-9")	#4@10 (EW)	-
GT1 (H ≤6'-9")	#4@4 (EW)	-
GT2	#4@4 (EW)	#5@3 (EW)
GT3 (H ≤6'-9")	#4@4 (EW)	-
GT4	#4@4 (EW)	#5@3 (EW)
GO	#4@10 (EW)	#4@6 (EW)
GDO	#4@6 (EW)	#4@4 (EW)

(EW) Each Way
* Main Box
** a = Larger interior span

NOTES:

1. No deduction or adjustment was made to the quantities of concrete and reinforcement for pipe openings, floor alternatives or curb type.
2. Maximum allowable height is 6'-9".
3. Quantities are approximate and for design purposes only.
4. Design is based on envelope of level and sloped ground.

STATE OF CALIFORNIA
DEPARTMENT OF TRANSPORTATION

PRECAST DRAINAGE INLET TABLES

NO SCALE

RSP D73G DATED JULY 15, 2016 SUPPLEMENTS THE STANDARD PLANS BOOK DATED 2015.

REVISED STANDARD PLAN RSP D73G

2015 REVISED STANDARD PLAN RSP D73G

6-20-16

© 2016 California Department of Transportation
All Rights Reserved

Dist	COUNTY	ROUTE	POST MILES TOTAL PROJECT	SHEET No.	TOTAL SHEETS
04	SCL	101,237	45.2/45.8 2.7/3.3	608	736

REGISTERED CIVIL ENGINEER

July 15, 2016
PLANS APPROVAL DATE

REGISTERED PROFESSIONAL ENGINEER — Carl W. Duan — No. C59976 — Exp. 6-30-18 — CIVIL — STATE OF CALIFORNIA

THE STATE OF CALIFORNIA OR ITS OFFICERS OR AGENTS SHALL NOT BE RESPONSIBLE FOR THE ACCURACY OR COMPLETENESS OF SCANNED COPIES OF THIS PLAN SHEET.

TO ACCOMPANY PLANS DATED _____

FACE ANGLE DETAIL "A"	
LENGTH OF CURB OPENING	No. OF ANCHORS
3'-6" OR LESS	2
7'-0"	3
10'-0"	4
14'-0"	5
21'-0"	7

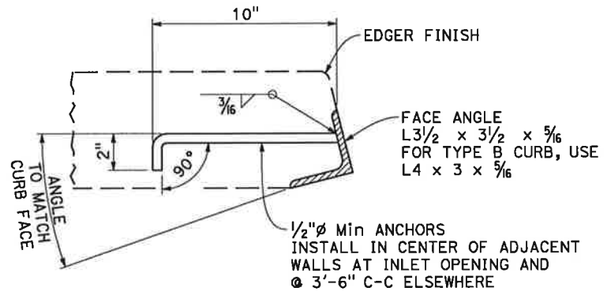

DETAIL "A"

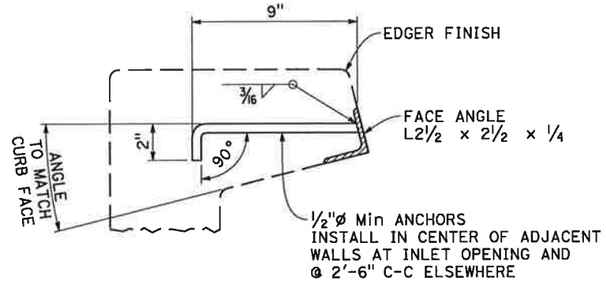

DETAIL "B"

FACE ANGLE AND ANCHOR

NOTE:

1. When shown on the project plans, place a ¾"ø plain round protection bar horizontally across the length of the opening and bend back 4" into the inlet wall on each side.

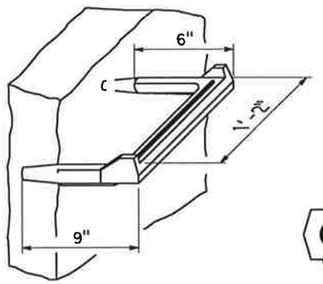

STEP INSERT

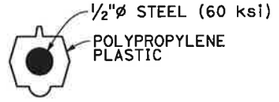

TYPICAL SECTION
(STEP INSERT)

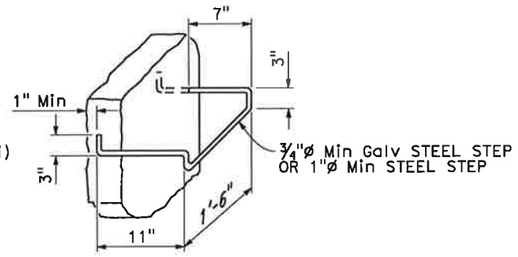

BAR STEP

STEP DETAILS

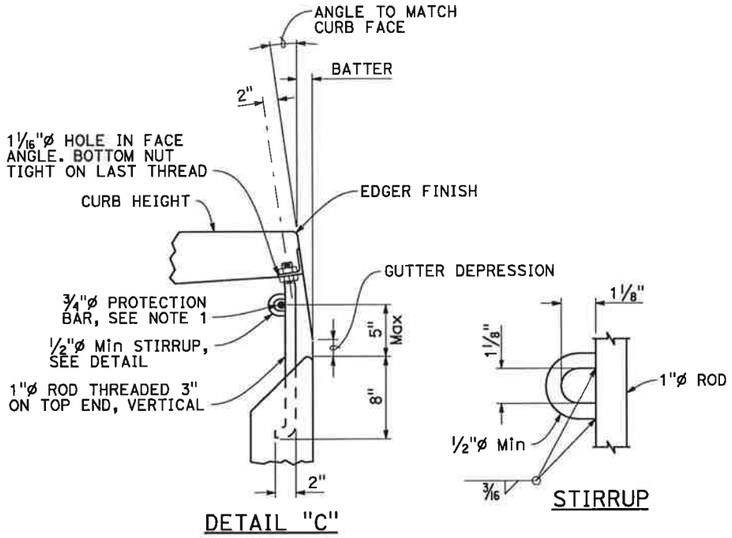

DETAIL "C"

STIRRUP

CURB SUPPORT

CURB SUPPORTS SHALL BE EVENLY SPACED AND MINIMAL IN NUMBER SUCH THAT MAXIMUM SPAN OF UNSUPPORTED CURB IS 7'-0".

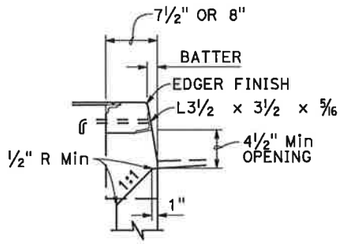

TYPE A CURBS

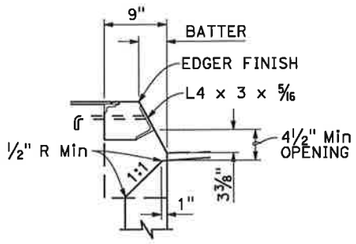

TYPE B CURBS

CURB OPENING DETAILS

STATE OF CALIFORNIA
DEPARTMENT OF TRANSPORTATION

DRAINAGE INLET DETAILS

NO SCALE

RSP D74 DATED JULY 15, 2016 SUPPLEMENTS THE STANDARD PLANS BOOK DATED 2015.

REVISED STANDARD PLAN RSP D74

2015 REVISED STANDARD PLAN RSP D74

6-20-16

© 2018 California Department of Transportation
All Rights Reserved

Dist	COUNTY	ROUTE	POST MILES TOTAL PROJECT	SHEET No.	TOTAL SHEETS
04	SCL	101 237	45.2/45.8 2.7/3.3	609	736

REGISTERED CIVIL ENGINEER

April 20, 2018
PLANS APPROVAL DATE

Raymond Don Tsztoo No. C37332 Exp. 6-30-18 CIVIL — REGISTERED PROFESSIONAL ENGINEER — STATE OF CALIFORNIA

THE STATE OF CALIFORNIA OR ITS OFFICERS OR AGENTS SHALL NOT BE RESPONSIBLE FOR THE ACCURACY OR COMPLETENESS OF SCANNED COPIES OF THIS PLAN SHEET.

TO ACCOMPANY PLANS DATED _____

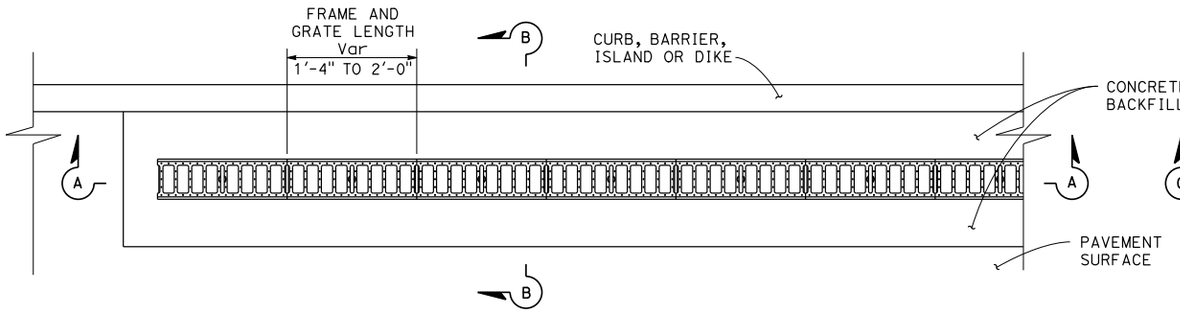

PLAN

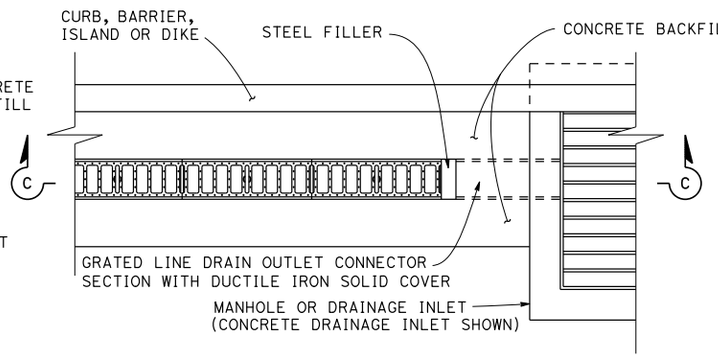

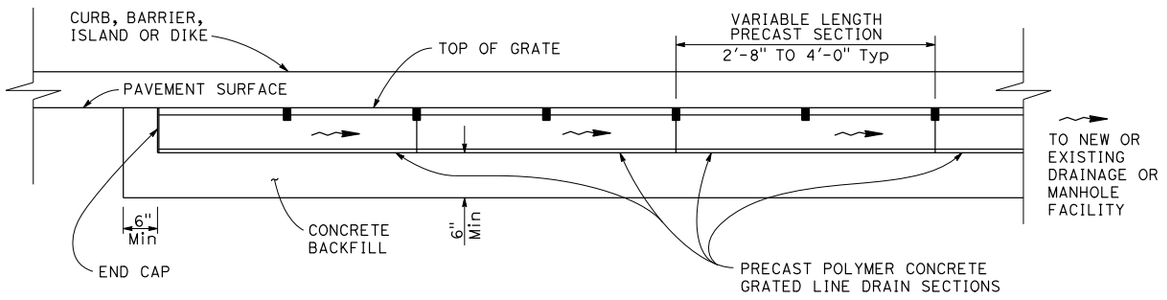

SECTION A-A

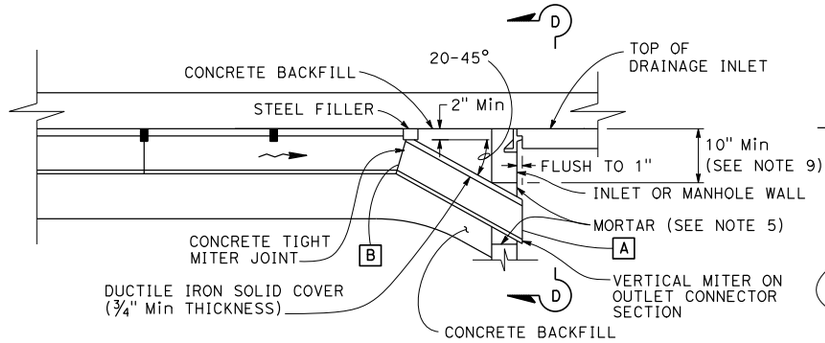

SECTION C-C

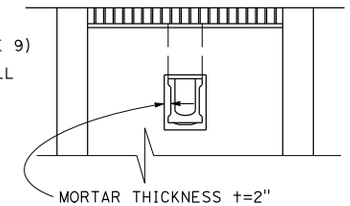

SECTION D-D

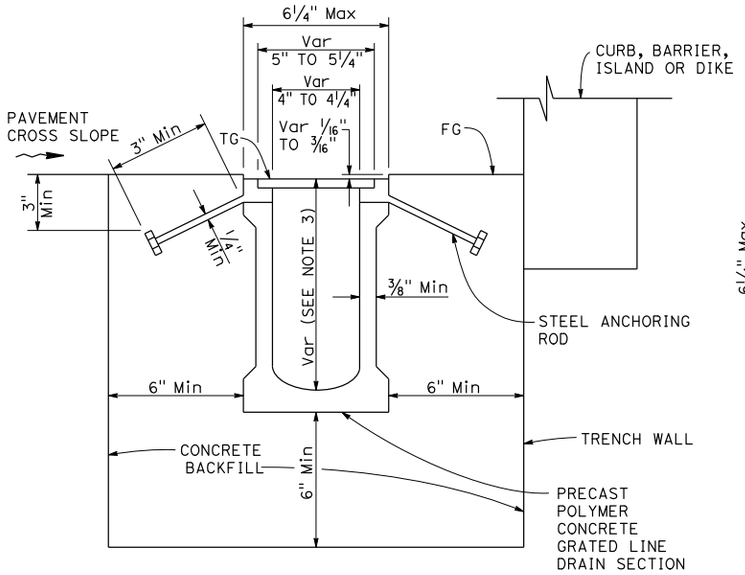

SECTION B-B
(Precast grated line drain with non-integral frame)

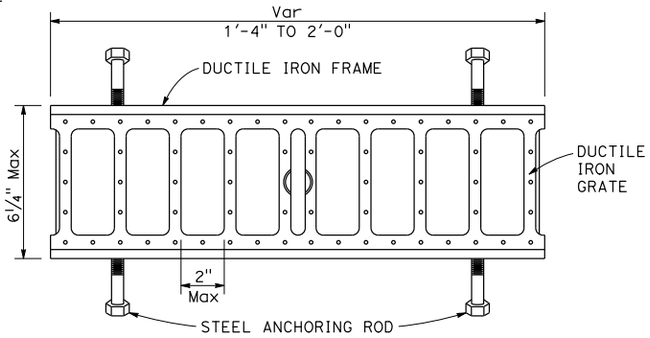

FRAME AND GRATE DETAIL
See Notes 6, 7 and 8

NOTES:

1. See Quanitiy Sheets for discharge capacity requirements.
2. Discharge capacity (cfs) at point A must be equivalent to maximum channel discharge capacity of grated line drain at point B.
3. Precast polymer concrete drain sections are available in non-sloped uniform depth sections 4 7/16" to 12" or in 0.6 percent pre-sloped sections with graduated depths from 4 7/16" to 12". See Project Plans for trench sections to be installed.
4. Nominal dimensions shown. Allowable tolerance ± 2% .
5. For GMP inlet connection, seal field joint with a pliable mixture of sand, portland cement and emulsified asphalt (mixture of 1 part portland cement, 3-5 parts sand and 1½ part SSI emulsified asphalt).
6. Within designated pedestrian paths of travel, the maximum grate opening in the direction of pedestrian traffic must not exceed ½".
7. Grate patterns may vary from detail shown. See Special Provisions.
8. 3/16" maximum gap between adjacent gratings.
9. Contractor to field verify minimum depth to avoid conflict with inlet top.

STATE OF CALIFORNIA
DEPARTMENT OF TRANSPORTATION

GRATED LINE DRAIN DETAILS No. 1 - POLYMER CONCRETE, 4" NOMINAL WIDTH

NO SCALE

RSP D98G DATED APRIL 20, 2018 SUPERSEDES RSP D98G
DATED JANUARY 20, 2017 THAT SUPPLEMENTS THE STANDARD PLANS BOOK DATED 2015.

REVISED STANDARD PLAN RSP D98G

2015 REVISED STANDARD PLAN RSP D98G

11-2-17

© 2017 California Department of Transportation
All Rights Reserved

Dist	COUNTY	ROUTE	POST MILES TOTAL PROJECT	SHEET No.	TOTAL SHEETS
04	SCL	101,237	45.2/45.8 2.7/3.3	610	736

Raymond Don Tsztoo
REGISTERED CIVIL ENGINEER

January 20, 2017
PLANS APPROVAL DATE

REGISTERED PROFESSIONAL ENGINEER
Raymond Don Tsztoo
No. C37332
Exp. 6-30-18
CIVIL
STATE OF CALIFORNIA

THE STATE OF CALIFORNIA OR ITS OFFICERS OR AGENTS SHALL NOT BE RESPONSIBLE FOR THE ACCURACY OR COMPLETENESS OF SCANNED COPIES OF THIS PLAN SHEET.

TO ACCOMPANY PLANS DATED _____

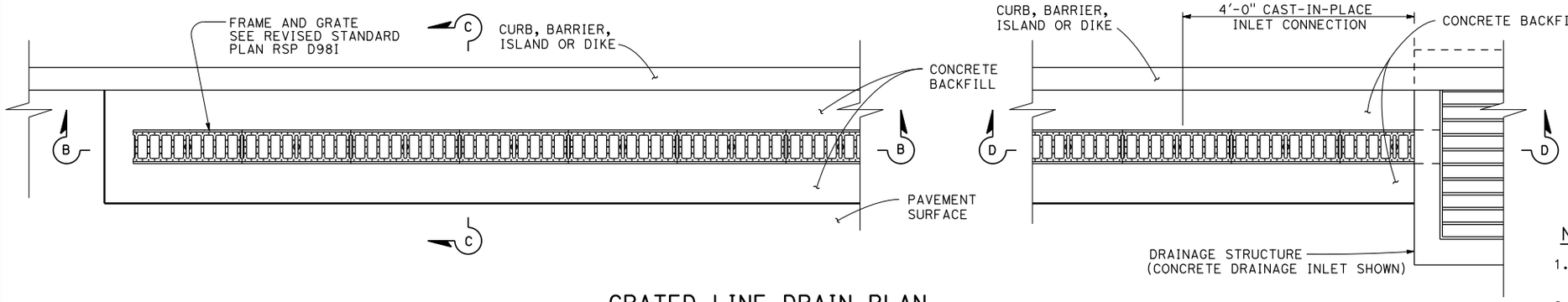

GRATED LINE DRAIN PLAN

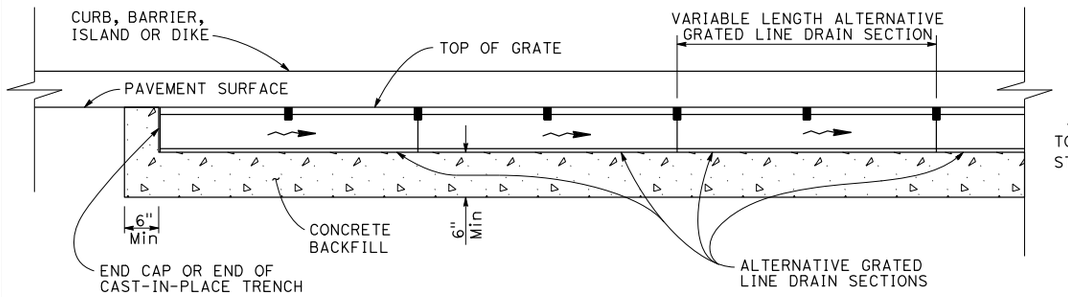

SECTION B-B

TO NEW DRAINAGE STRUCTURE

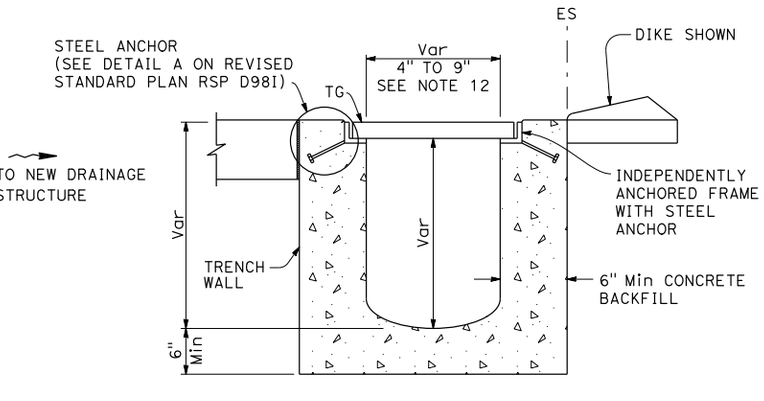

SECTION E-E

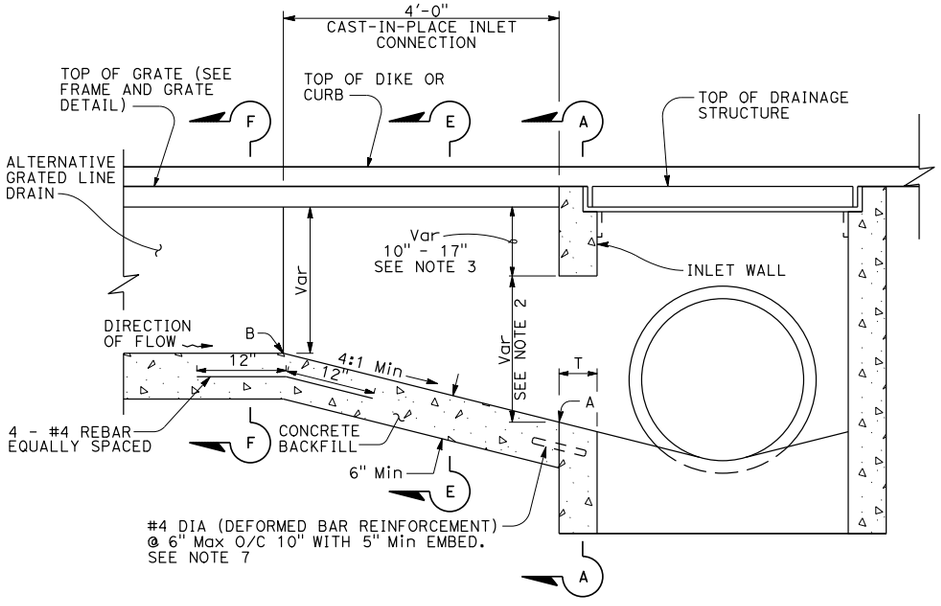

SECTION D-D

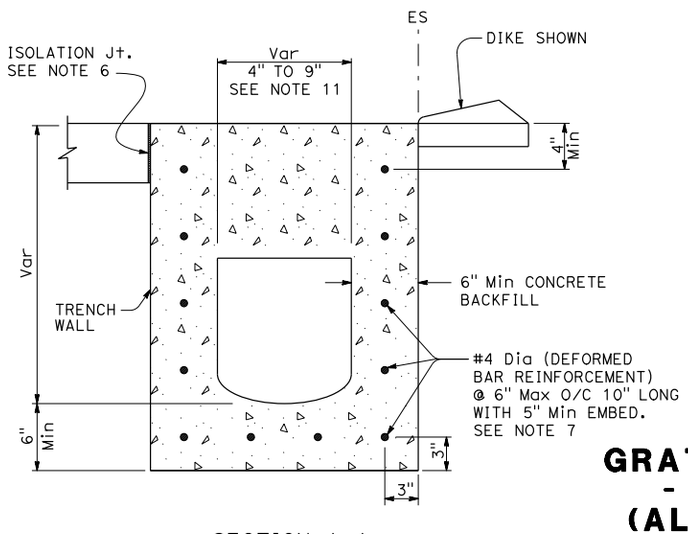

SECTION A-A

NOTES:

1. See Quantity Sheets for discharge capacity requirements.
2. Discharge capacity (cfs) at point A must be equivalent to maximum channel discharge capacity of grated line drain at point B.
3. Contractor to field verify minimum depth to avoid conflict with inlet top.
4. Grate patterns may vary from details shown. See special provisions.
5. See Revised Standard Plan RSP D98G for 4" polymer concrete grated line details.
6. Within PCC pavement, a 0.5" isolation joint must be made between pavement and concrete backfill. See isolation joint details on Standard Plans P45 and P46.
7. Bottom row of dowels to match inlet connection slope with 2" Min clear to inside of box. Place other dowels normal to inlet wall with 1½" Min clear to inside of box. (When T = 6" use 4½" Min embed)
8. Channel section shape and frame and grate configuration may vary.
9. Nominal dimensions shown. Allowable tolerances ±2%.
10. 3/16" maximum gap between adjacent grates.
11. Minimum channel width must be equal or greater than maximum channel width of grated line drain section.
12. See Revised Standard Plan RSP D98I for Section C-C and Section F-F.

STATE OF CALIFORNIA
DEPARTMENT OF TRANSPORTATION

GRATED LINE DRAIN DETAILS No. 2 - INLET CONNECTION DETAILS (ALL TYPES EXCEPT 4" NOMINAL WIDTH POLYMER CONCRETE)

NO SCALE

RSP D98H DATED JANUARY 20, 2017 SUPPLEMENTS THE STANDARD PLANS BOOK DATED 2015.

REVISED STANDARD PLAN RSP D98H

2015 REVISED STANDARD PLAN RSP D98H

11-9-16

© 2017 California Department of Transportation
All Rights Reserved

Dist	COUNTY	ROUTE	POST MILES TOTAL PROJECT	SHEET No.	TOTAL SHEETS
04	SCL	101,237	45.2/45.8 2.7/3.3	611	736

Raymond Don Tsztoo
REGISTERED CIVIL ENGINEER

January 20, 2017
PLANS APPROVAL DATE

REGISTERED PROFESSIONAL ENGINEER
Raymond Don Tsztoo
No. C37332
Exp. 6-30-18
CIVIL
STATE OF CALIFORNIA

THE STATE OF CALIFORNIA OR ITS OFFICERS OR AGENTS SHALL NOT BE RESPONSIBLE FOR THE ACCURACY OR COMPLETENESS OF SCANNED COPIES OF THIS PLAN SHEET.

TO ACCOMPANY PLANS DATED _____

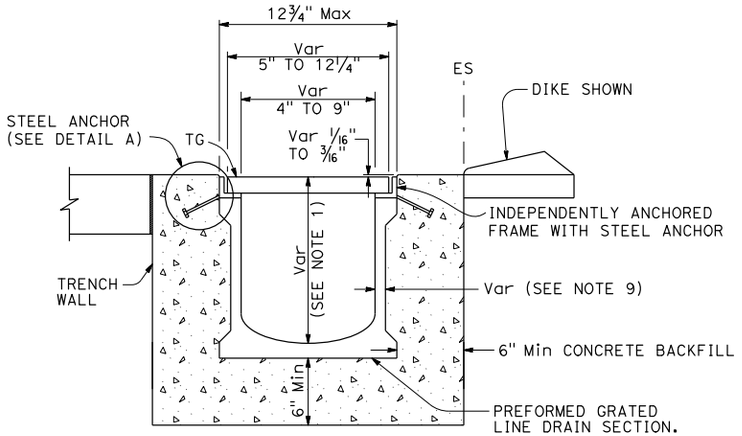

SECTION C-C
(See Note 1)

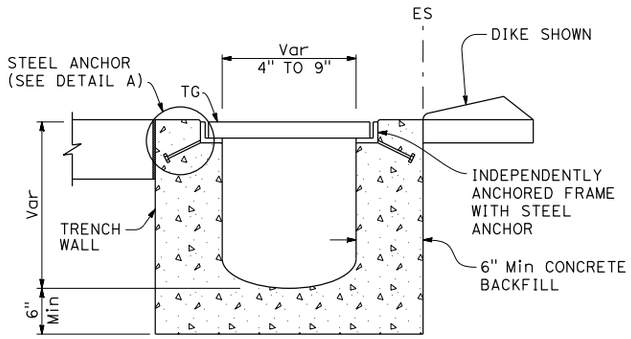

CAST-IN-PLACE ALTERNATIVE

SECTION C-C
(See Note 1)

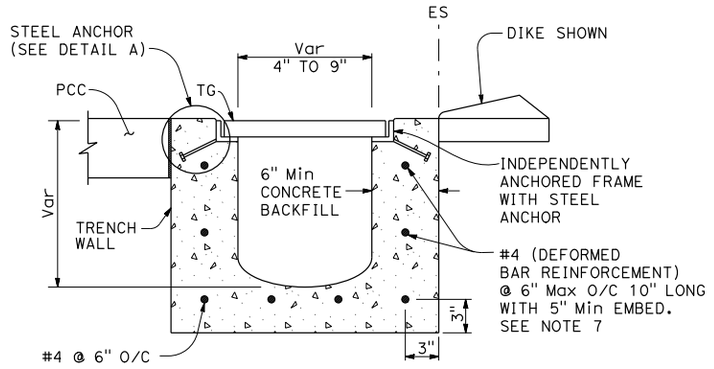

SECTION F-F
FOR CAST-IN-PLACE AND PRECAST INLETS
(See Note 1)

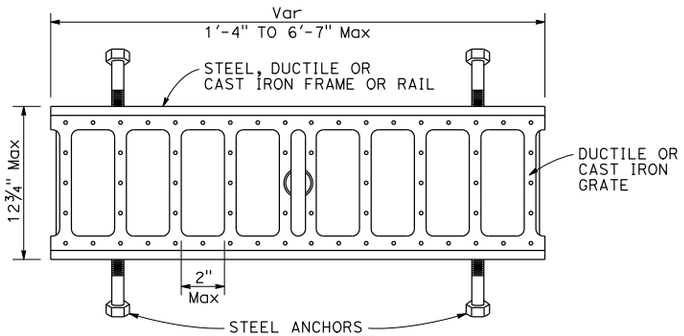

FRAME AND GRATE DETAIL

(See Note 1)

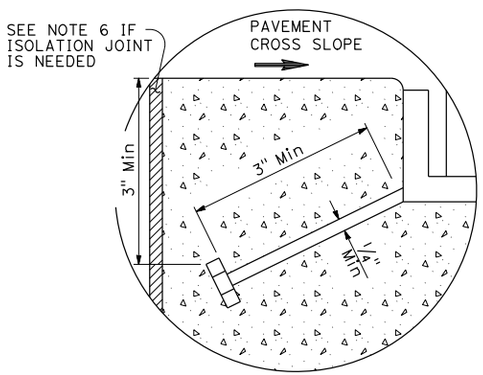

DETAIL A

NOTE:

1. See Revised Standard Plan RSP D98H for corresponding notes.

STATE OF CALIFORNIA
DEPARTMENT OF TRANSPORTATION

GRATED LINE DRAIN DETAILS No. 3 (ALL TYPES EXCEPT 4" NOMINAL WIDTH POLYMER CONCRETE)

NO SCALE

RSP D98I DATED JANUARY 20, 2017 SUPPLEMENTS THE STANDARD PLANS BOOK DATED 2015.

REVISED STANDARD PLAN RSP D98I

2015 REVISED STANDARD PLAN RSP D98I

11-9-16

© 2016 California Department of Transportation
All Rights Reserved

EXISTING	NEW	ITEM DESCRIPTION
		WATER METER (WM)
		BACKFLOW PREVENTER ASSEMBLY (BPA)
		BACKFLOW PREVENTER ENCLOSURE (BPE)
		BOOSTER PUMP (BP)
		TRUCK LOADING STANDPIPE (TLS)
FS	FS	FLOW SENSOR (FS)
		MASTER IRRIGATION CONTROLLER (MIC)
		AUXILIARY IRRIGATION CONTROLLER (AIC)
		IRRIGATION CONTROLLER (IC) IRRIGATION CONTROLLER (IC) (BATTERY) IRRIGATION CONTROLLER (IC) (SOLAR) IRRIGATION CONTROLLER (IC) (TWO WIRE)
		IRRIGATION CONTROLLER(S) IN CONTROLLER ENCLOSURE CABINET (ICC)
acc	ACC	ARMOR-CLAD CONDUCTORS (ACC)
		CONTROL AND NEUTRAL CONDUCTORS (CNC)
		IRRIGATION CONDUIT
		IRRIGATION SLEEVE
dip	DIP	DUCTILE IRON PIPE (SUPPLY LINE) (MAIN) (DIP)
		GALVANIZED STEEL PIPE (SUPPLY LINE) (MAIN) (GSP)
		GALVANIZED STEEL PIPE (SUPPLY LINE) (LATERAL) (GSP)
		PLASTIC PIPE (SUPPLY LINE) (MAIN)
		PLASTIC PIPE (SUPPLY LINE) (LATERAL)
cp	CP	COPPER PIPE (SUPPLY LINE)
dit	DIT	DRIP IRRIGATION TUBING
		REMOTE CONTROL VALVE (RCV) REMOTE CONTROL VALVE (MASTER) (RCVM) REMOTE CONTROL VALVE (MASTER) W/FLOW METER (RCVMF)
P	P	REMOTE CONTROL VALVE W/PRESSURE REGULATOR (RCVP)
		EXISTING MANUAL CONTROL VALVE (MCV)
		DRIP VALVE ASSEMBLY (DVA)
		WYE STRAINER ASSEMBLY (WSA)

EXISTING	NEW	ITEM DESCRIPTION
		GATE VALVE (GV)
		BALL VALVE (BV)
		QUICK COUPLING VALVE (QCV)
		CAM COUPLER ASSEMBLY (CCA)
		GARDEN VALVE ASSEMBLY (GARVA)
		PRESSURE REGULATING VALVE (PRV)
		PRESSURE RELIEF VALVE (PRLV)
		FLOW CONTROL VALVE (FCV)
		COMBINATION AIR RELEASE VALVE (CARV)
		CHECK VALVE (CV)
		FLUSH VALVE (FV)
		EXISTING NOZZLE LINE W/TURNING UNION
		EXISTING IRRIGATION SYSTEM
		EXISTING IRRIGATION SYSTEM TO BE REMOVED
		CHAIN LINK GATE
		QUICK COUPLING VALVE W/SPRINKLER PROTECTOR
3	3	SPRINKLER W/SPRINKLER PROTECTOR
		CONNECT TO EXISTING SYSTEM
		CAP
		CAP EXISTING
	FR	FIBER ROLL
	CS	COMPOST SOCK

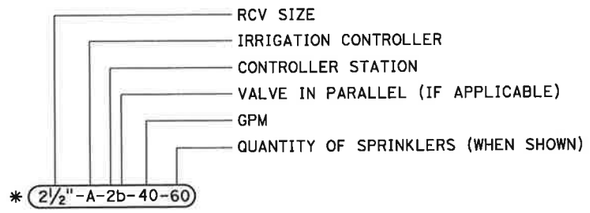

VALVE CODE

* VALVE CODES FOR EXISTING VALVES ARE SHOWN IN A DASHED ENCLOSURE.

Dist	COUNTY	ROUTE	POST MILES TOTAL PROJECT	SHEET No.	TOTAL SHEETS
04	SCL	101,237	45.2/45.8 2.7/3.3	612	736

LICENSED LANDSCAPE ARCHITECT

July 15, 2016
PLANS APPROVAL DATE

THE STATE OF CALIFORNIA OR ITS OFFICERS OR AGENTS SHALL NOT BE RESPONSIBLE FOR THE ACCURACY OR COMPLETENESS OF SCANNED COPIES OF THIS PLAN SHEET.

LICENSED LANDSCAPE ARCHITECT — GREGORY V. FERRARO — 9-30-17 Renewal Date — STATE OF CALIFORNIA

TO ACCOMPANY PLANS DATED _____

STATE OF CALIFORNIA
DEPARTMENT OF TRANSPORTATION

LANDSCAPE AND EROSION CONTROL SYMBOLS

NO SCALE

RSP H1 DATED JULY 15, 2016 SUPERSEDES STANDARD PLAN H1 DATED OCTOBER 30, 2015 - PAGE 230 OF THE STANDARD PLANS BOOK DATED 2015.

REVISED STANDARD PLAN RSP H1

2015 REVISED STANDARD PLAN RSP H1

5-24-16

© 2017 California Department of Transportation
All Rights Reserved

Dist	COUNTY	ROUTE	POST MILES TOTAL PROJECT	SHEET No.	TOTAL SHEETS
04	SCL	101 237	45.2/45.8 2.7/3.3	613	736

LICENSED LANDSCAPE ARCHITECT

July 21, 2017
PLANS APPROVAL DATE

LICENSED LANDSCAPE ARCHITECT — Michael V. Ferrara 3505 — Signature 9-30-17 Renewal Date — Date — STATE OF CALIFORNIA

THE STATE OF CALIFORNIA OR ITS OFFICERS OR AGENTS SHALL NOT BE RESPONSIBLE FOR THE ACCURACY OR COMPLETENESS OF SCANNED COPIES OF THIS PLAN SHEET.

TO ACCOMPANY PLANS DATED _____

NOTES:

1. 40" - 50"
2. 12" downstream of RCV
   18" upstream of RCV

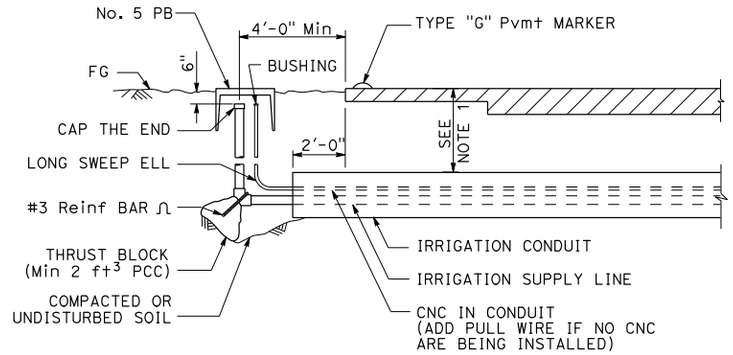

SECTION

IRRIGATION CONDUIT

UNDER TRAVELED WAY

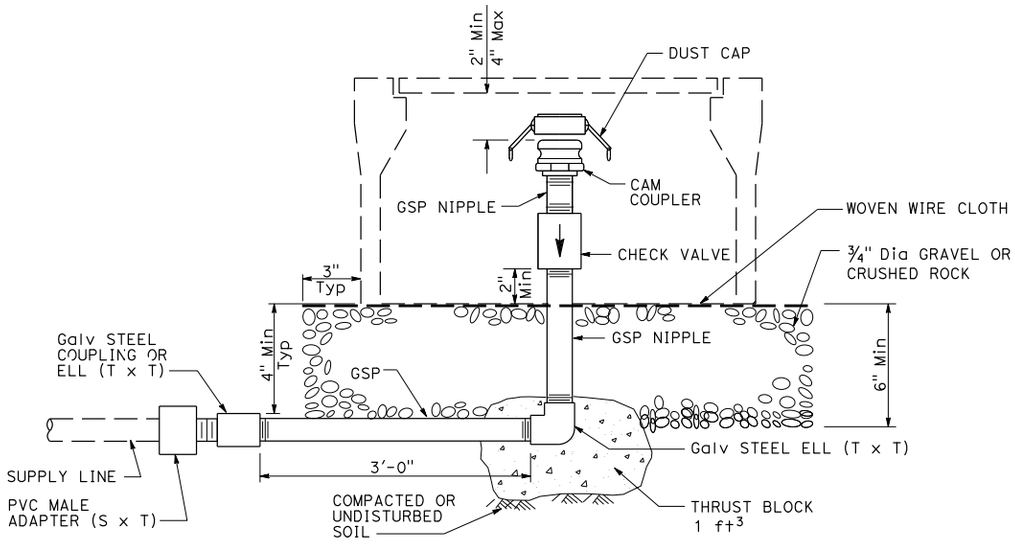

ELEVATION

CAM COUPLER ASSEMBLY

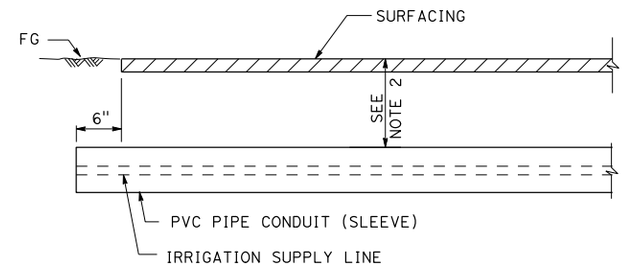

SECTION

PVC PIPE CONDUIT (SLEEVE)

UNDER SIDEWALKS, DRIVEWAYS PAVEMENT, SLOPE PAVING, PAVED DITCHES AND PATHS

STATE OF CALIFORNIA
DEPARTMENT OF TRANSPORTATION

LANDSCAPE DETAILS

NO SCALE

RSP H8 DATED JULY 21, 2017 SUPERSEDES RSP H8 DATED APRIL 15, 2016 AND STANDARD PLAN H8 DATED OCTOBER 30, 2015 - PAGE 237 OF THE STANDARD PLANS BOOK DATED 2015.

REVISED STANDARD PLAN RSP H8

2015 REVISED STANDARD PLAN RSP H8

6-22-17

© 2017 California Department of Transportation
All Rights Reserved

Dist	COUNTY	ROUTE	POST MILES TOTAL PROJECT	SHEET No.	TOTAL SHEETS
04	SCL	101,237	45.2/45.8 2.7/3.3	614	736

LICENSED LANDSCAPE ARCHITECT

July 21, 2017
PLANS APPROVAL DATE

LICENSED LANDSCAPE ARCHITECT Michael V. Ferrara 3505 Signature 9-30-17 Renewal Date Date STATE OF CALIFORNIA

THE STATE OF CALIFORNIA OR ITS OFFICERS OR AGENTS SHALL NOT BE RESPONSIBLE FOR THE ACCURACY OR COMPLETENESS OF SCANNED COPIES OF THIS PLAN SHEET.

TO ACCOMPANY PLANS DATED _____

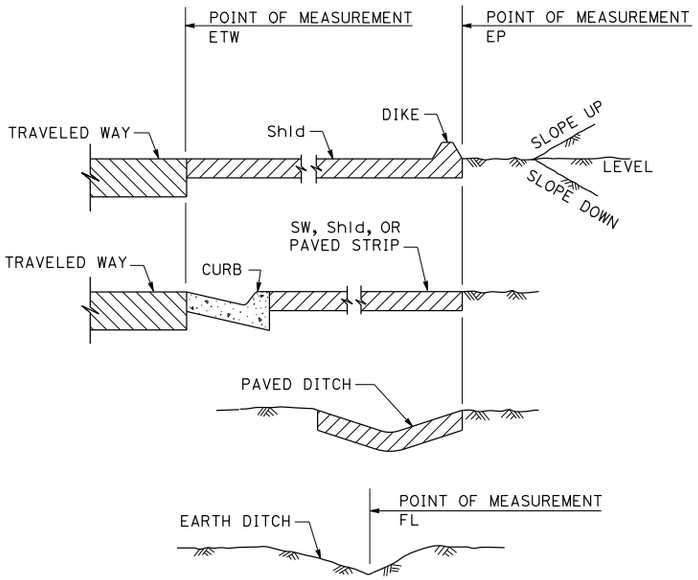

SECTION

POINTS OF MEASUREMENT

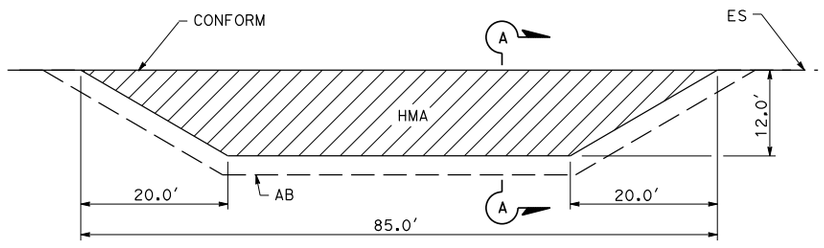

PLAN

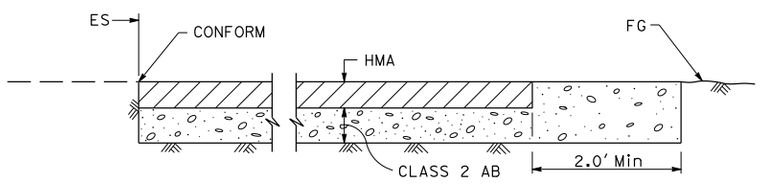

SECTION A-A

MAINTENANCE VEHICLE PULLOUT

NOTES:

1. 12" downstream of RCV
   18" upstream of RCV
2. Width sufficent to allow snaking of pipe and CNC bundles without stacking.
3. 1 ft minimum to back of sidewalk.
4. 2" Min or Dia of largest pipe in trench.

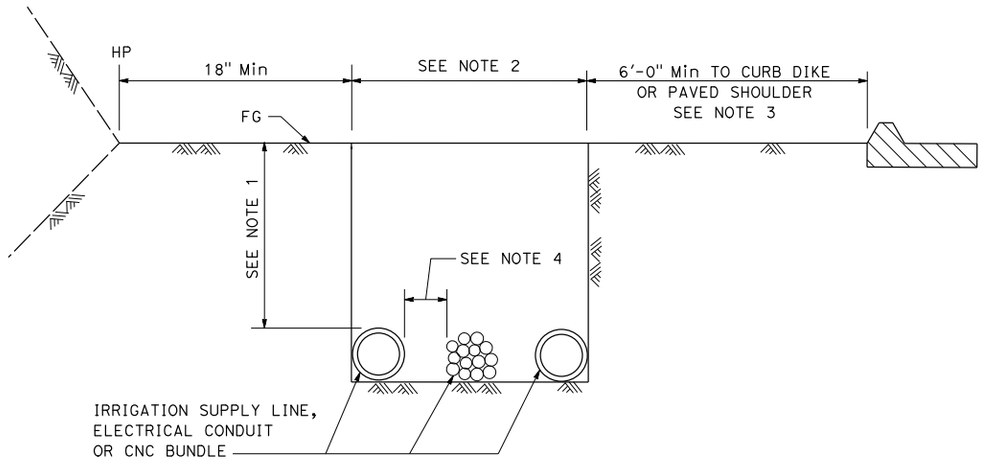

SECTION

IRRIGATION TRENCH DETAIL

STATE OF CALIFORNIA
DEPARTMENT OF TRANSPORTATION

LANDSCAPE DETAILS

NO SCALE

RSP H9 DATED JULY 21, 2017 SUPERSEDES STANDARD PLAN H9
DATED OCTOBER 30, 2015 - PAGE 238 OF THE STANDARD PLANS BOOK DATED 2015.

REVISED STANDARD PLAN RSP H9

2015 REVISED STANDARD PLAN RSP H9

5-10-17

© 2017 California Department of Transportation
All Rights Reserved

Dist	COUNTY	ROUTE	POST MILES TOTAL PROJECT	SHEET No.	TOTAL SHEETS
04	SCL	101,237	45.2/45.8 2.7/3.3	615	736

LICENSED LANDSCAPE ARCHITECT

July 21, 2017
PLANS APPROVAL DATE

LICENSED LANDSCAPE ARCHITECT Michael V. Ferrara 3505 Signature 9-30-17 Renewal Date Date STATE OF CALIFORNIA

THE STATE OF CALIFORNIA OR ITS OFFICERS OR AGENTS SHALL NOT BE RESPONSIBLE FOR THE ACCURACY OR COMPLETENESS OF SCANNED COPIES OF THIS PLAN SHEET.

TO ACCOMPANY PLANS DATED _____

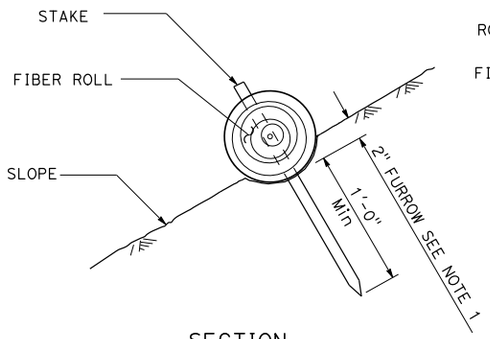

SECTION

FIBER ROLL (TYPE 1)

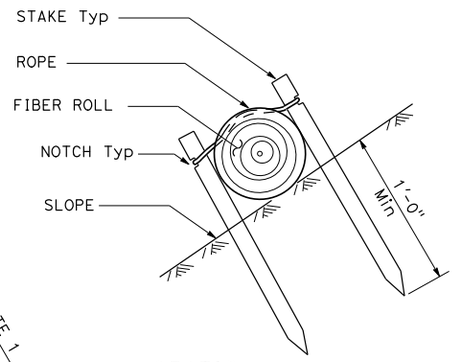

SECTION

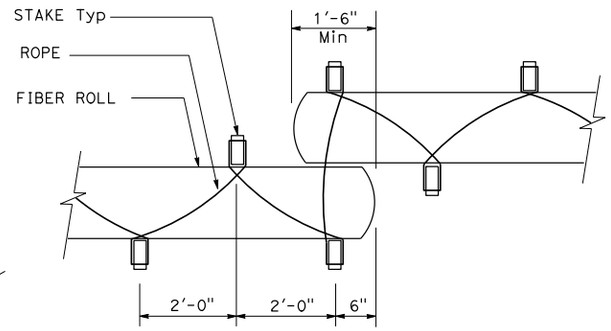

PLAN

FIBER ROLL (TYPE 2)

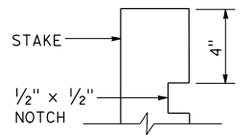

ELEVATION

STAKE NOTCH DETAIL

NOTE:

1. Installations shown in the perspectives are for slope inclination of 10:1 (Horiz:Vert) and steeper.

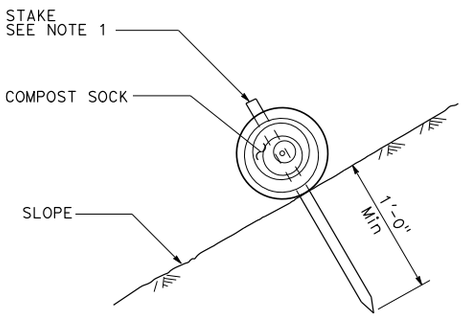

SECTION

COMPOST SOCK

NOTE:

1. May install stake adjacent to bottom edge of compost sock.

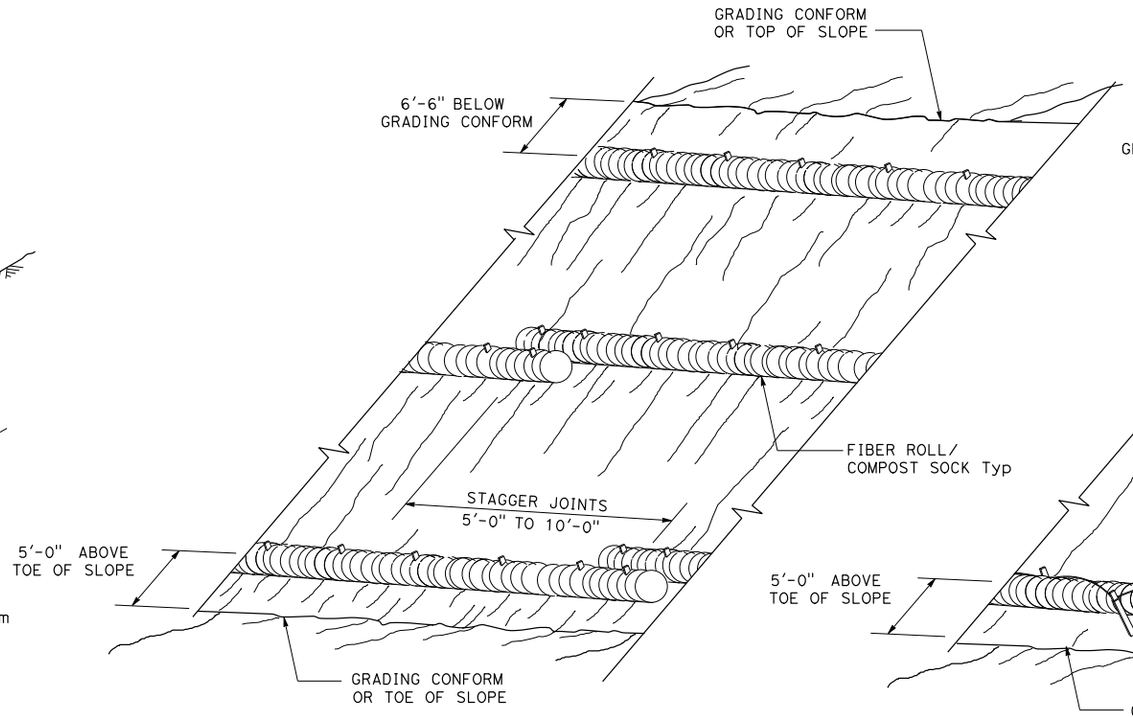

PERSPECTIVE

FIBER ROLL (TYPE 1) COMPOST SOCK

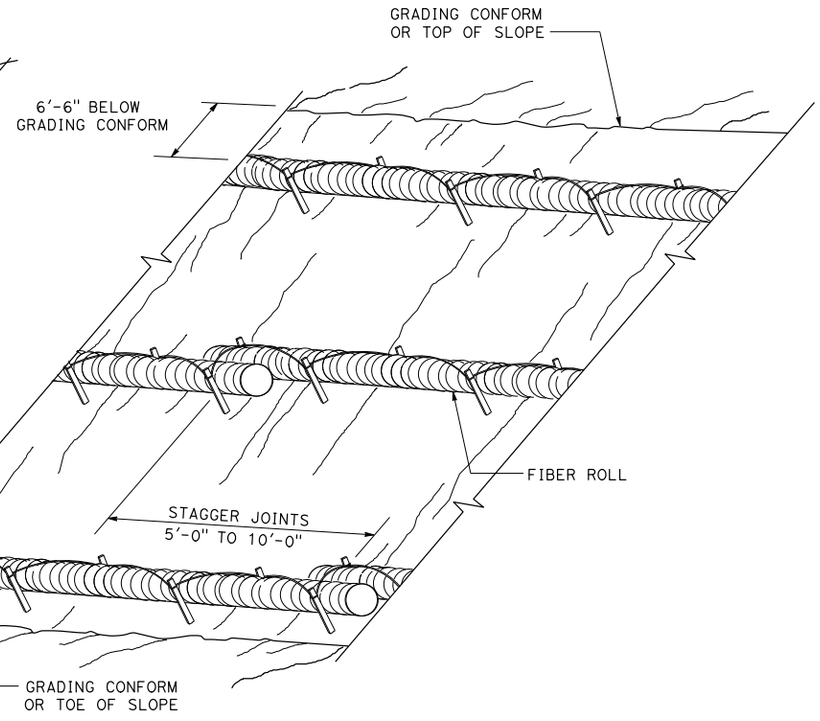

PERSPECTIVE

FIBER ROLL (TYPE 2)

STATE OF CALIFORNIA
DEPARTMENT OF TRANSPORTATION

EROSION CONTROL DETAILS FIBER ROLL AND COMPOST SOCK

NO SCALE

RSP H51 DATED JULY 21, 2017 SUPERSEDES STANDARD PLAN H51
DATED OCTOBER 30, 2015 - PAGE 240 OF THE STANDARD PLANS BOOK DATED 2015.

REVISED STANDARD PLAN RSP H51

2015 REVISED STANDARD PLAN RSP H51

5-25-17

© 2017 California Department of Transportation
All Rights Reserved

Dist	COUNTY	ROUTE	POST MILES TOTAL PROJECT	SHEET No.	TOTAL SHEETS
04	SCL	101,237	45.2/45.8 2.7/3.3	616	736

Devinder Singh
REGISTERED CIVIL ENGINEER

January 20, 2017
PLANS APPROVAL DATE

REGISTERED PROFESSIONAL ENGINEER — Devinder Singh — No. C50470 — Exp. 6-30-17 — CIVIL — STATE OF CALIFORNIA

THE STATE OF CALIFORNIA OR ITS OFFICERS OR AGENTS SHALL NOT BE RESPONSIBLE FOR THE ACCURACY OR COMPLETENESS OF SCANNED COPIES OF THIS PLAN SHEET.

TO ACCOMPANY PLANS DATED _____

2015 REVISED STANDARD PLAN RSP T9

TABLE 1

TAPER LENGTH CRITERIA AND CHANNELIZING DEVICE SPACING

SPEED (S)	MINIMUM TAPER LENGTH * FOR WIDTH OF OFFSET 12 FEET (W)				MAXIMUM CHANNELIZING DEVICE SPACING		
					X	Y	Z **
	TANGENT 2L	MERGING L	SHIFTING L/2	SHOULDER L/3	TAPER	TANGENT	CONFLICT
mph	ft	ft	ft	ft	ft	ft	ft
20	160	80	40	27	20	40	10
25	250	125	63	42	25	50	12
30	360	180	90	60	30	60	15
35	490	245	123	82	35	70	17
40	640	320	160	107	40	80	20
45	1080	540	270	180	45	90	22
50	1200	600	300	200	50	100	25
55	1320	660	330	220	50	100	25
60	1440	720	360	240	50	100	25
65	1560	780	390	260	50	100	25
70	1680	840	420	280	50	100	25
75	1800	900	450	300	50	100	25

* - For other offsets, use the following merging taper length formula for L:
For speed of 40 mph or less, $L = WS^2/60$
For speed of 45 mph or more, $L = WS$

Where: L = Taper length in feet
W = Width of offset in feet
S = Posted speed limit, off-peak 85th-percentile speed prior to work starting, or the anticipated operating speed in mph

** - Use for taper and tangent sections where there are no pavement markings or where there is a conflict between existing pavement markings and channelizers (CA).

TABLE 2

LONGITUDINAL BUFFER SPACE AND FLAGGER STATION SPACING

SPEED *	Min D **	DOWNGRADE Min D ***		
		-3%	-6%	-9%
mph	ft	ft	ft	ft
20	115	116	120	126
25	155	158	165	173
30	200	205	215	227
35	250	257	271	287
40	305	315	333	354
45	360	378	400	427
50	425	446	474	507
55	495	520	553	593
60	570	598	638	686
65	645	682	728	785
70	730	771	825	891
75	820	866	927	1003

* - Speed is posted speed limit, off-peak 85th-percentile speed prior to work starting, or the anticipated operating speed in mph

** - Longitudinal buffer space or flagger station spacing

*** - Use on sustained downgrade steeper than -3 percent and longer than 1 mile.

TABLE 3

ADVANCE WARNING SIGN SPACING

ROAD TYPE	DISTANCE BETWEEN SIGNS *		
	A	B	C
	ft	ft	ft
URBAN - 25 mph OR LESS	100	100	100
URBAN - MORE THAN 25 mph TO 40 mph	250	250	250
URBAN - MORE THAN 40 mph	350	350	350
RURAL	500	500	500
EXPRESSWAY / FREEWAY	1000	1500	2640

* - The distances are approximate, are intended for guidance purposes only, and should be applied with engineering judgment. These distances should be adjusted by the Engineer for field conditions, if necessary, by increasing or decreasing the recommmended distances.

STATE OF CALIFORNIA
DEPARTMENT OF TRANSPORTATION

TRAFFIC CONTROL SYSTEM TABLES FOR LANE AND RAMP CLOSURES

NO SCALE

RSP T9 DATED JANUARY 20, 2017 SUPERSEDES STANDARD PLAN T9
DATED OCTOBER 30, 2015 - PAGE 249 OF THE STANDARD PLANS BOOK DATED 2015.

REVISED STANDARD PLAN RSP T9

11-1-16

© 2017 California Department of Transportation
All Rights Reserved

Dist	COUNTY	ROUTE	POST MILES TOTAL PROJECT	SHEET No.	TOTAL SHEETS
04	SCL	101,237	45.2/45.8 2.7/3.3	617	736

Devinder Singh
REGISTERED CIVIL ENGINEER

January 20, 2017
PLANS APPROVAL DATE

REGISTERED PROFESSIONAL ENGINEER — Devinder Singh — No. C50470 — Exp. 6-30-17 — CIVIL — STATE OF CALIFORNIA

THE STATE OF CALIFORNIA OR ITS OFFICERS OR AGENTS SHALL NOT BE RESPONSIBLE FOR THE ACCURACY OR COMPLETENESS OF SCANNED COPIES OF THIS PLAN SHEET.

NOTES:

TO ACCOMPANY PLANS DATED _____

See Revised Standard Plan RSP T9 for tables.

Use cone spacing X for taper segment, Y for tangent segment or Z for conflict situations, as appropriate, per Table 1, unless X, Y, or Z cone spacing is shown on this sheet.

All temporary warning signs shall have black legend on fluorescent orange background.

California codes are designated by (CA). Otherwise, Federal (MUTCD) codes are shown.

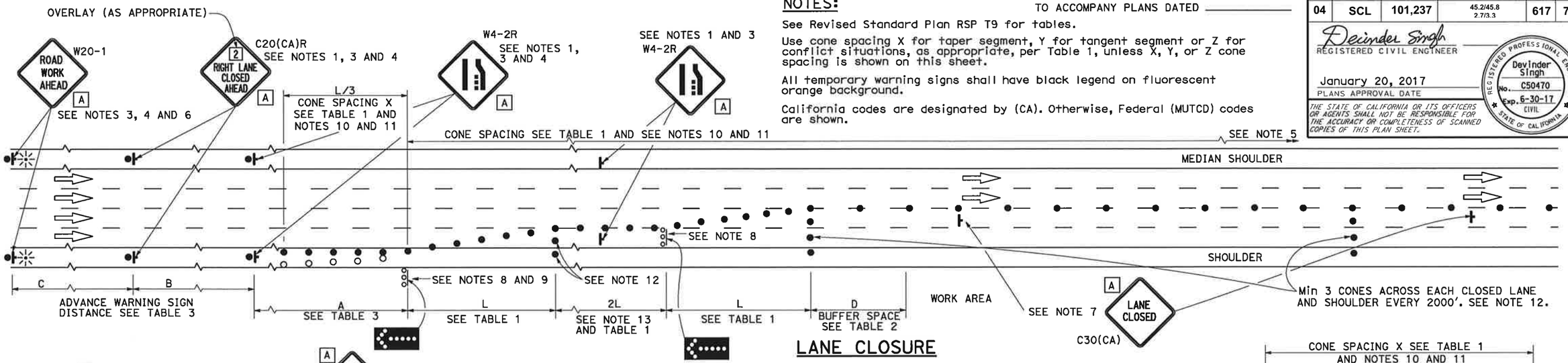

LANE CLOSURE

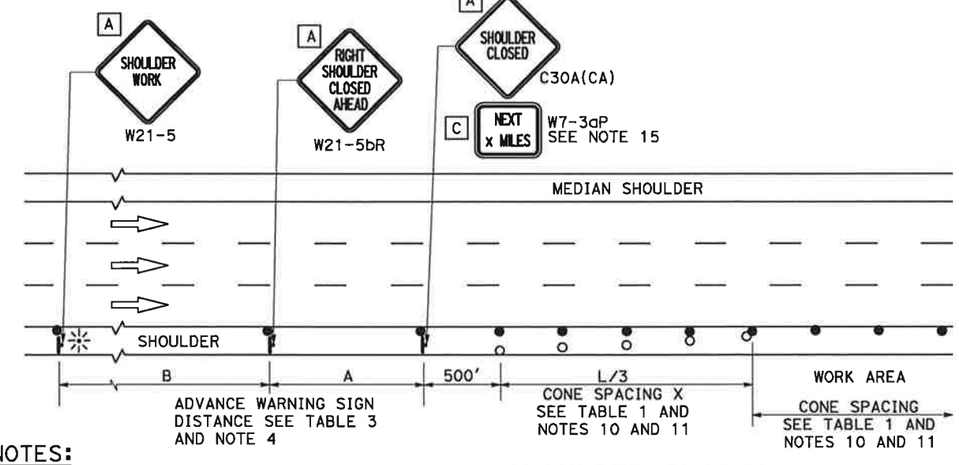

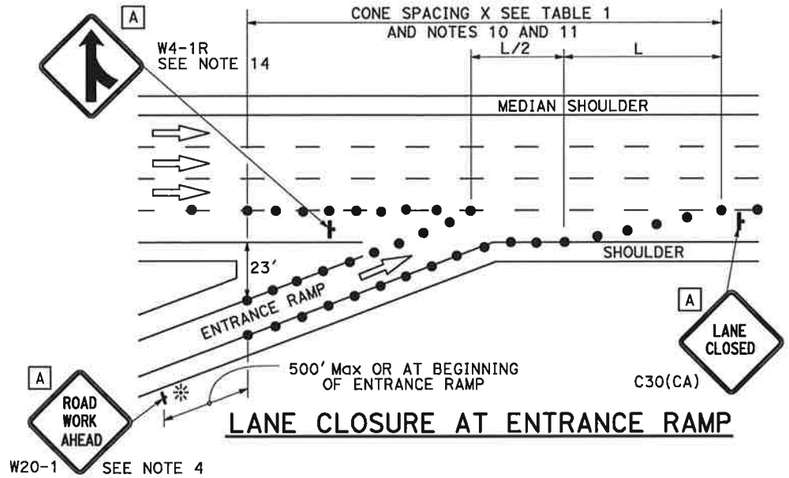

LANE CLOSURE AT ENTRANCE RAMP

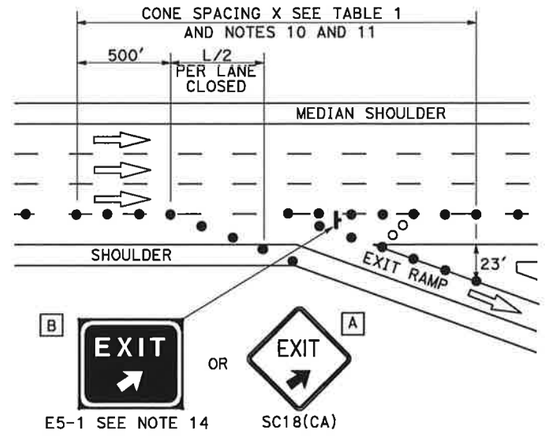

LANE CLOSURE AT EXIT RAMP

SEE NOTE 16

NOTES:

1. Median lane closures shall conform to the details as shown except that C20(CA)L and W4-2L signs shall be used.
2. At least one person shall be assigned to provide full time maintenance of traffic control devices for lane closures.
3. Duplicate sign installations are not required:
   a) On opposite shoulder if at least one-half of the available lanes remain open to traffic.
   b) In the median if the width of the median shoulder is less than 8' and the outside lanes are to be closed.
4. Each advance warning sign on each side of the roadway shall be equipped with at least two flags for daytime closure. Each flag shall be at least 16" x 16" in size and shall be orange or fluorescent red-orange in color. Flashing beacons shall be placed at the locations indicated for lane closure during hours of darkness.
5. A G20-2 "END ROAD WORK" sign, with minimum size of 48" x 24" as appropriate, shall be placed at the end of the lane closure unless the end of work area is obvious or ends within a larger project's limits.

SHOULDER CLOSURE

6. If the W20-1 sign would follow within 2000' of a stationary W20-1 or G20-1 "ROAD WORK NEXT _____ MILES", use a C20(CA) sign for the first advance warning sign.
7. Place a C30(CA) sign every 2000' throughout length of lane closure.
8. Use one flashing arrow sign for each lane closed. The flashing arrow signs shall be Type I.
9. A minimum 1500' of sight distance shall be provided where possible for vehicles approaching the first flashing arrow sign. Lane closures shall not begin at top of crest vertical curve or on a horizontal curve.
10. All cones used for lane closures during the hours of darkness shall be fitted with retroreflective bands (or sleeves).
11. Portable delineators, placed at one-half the spacing indicated for traffic cones may be used instead of cones for daytime closures only.
12. A minimum of 3 cones shall be placed transversely across each closed lane and shoulder at each location where a taper across a traffic lane ends and every 2000' as shown on the "Lane Closure" detail. Two Type II barricades may be used instead of the 3 cones. The transverse alignment of the cones or barricades on the closed shoulder may be shifted from the transverse alignment to provide access to the work.
13. The 2L tangent shown along lane lines shall be used between the L tapers required for each closed traffic lane.
14. The E5-1 or SC18(CA) and W4-1 signs shall be used as shown.
15. A W7-3aP "NEXT___ MILES" plaque must be used if the shoulder closure extends beyond the distance that can be perceived by road users.
16. For the warning sign requirements at the Exit Ramp, when work is proposed on the local street, see CA MUTCD Figure 6H-22 to 6H-27.

LEGEND

- ● TRAFFIC CONE
- ○ TRAFFIC CONE (OPTIONAL TAPER)
- TEMPORARY TRAFFIC CONTROL SIGN
- FLASHING ARROW SIGN (FAS)
- FAS SUPPORT OR TRAILER
- PORTABLE FLASHING BEACON

SIGN PANEL SIZE (Min)

- A 48" x 48"
- B 72" x 60"
- C 36" x 30"

STATE OF CALIFORNIA
DEPARTMENT OF TRANSPORTATION

TRAFFIC CONTROL SYSTEM FOR LANE CLOSURE ON FREEWAYS AND EXPRESSWAYS

NO SCALE

RSP T10 DATED JANUARY 20, 2017 SUPERSEDES STANDARD PLAN T10 DATED OCTOBER 30, 2015 - PAGE 250 OF THE STANDARD PLANS BOOK DATED 2015.

REVISED STANDARD PLAN RSP T10

11-1-16

2015 REVISED STANDARD PLAN RSP T10

© 2018 California Department of Transportation
All Rights Reserved

Dist	COUNTY	ROUTE	POST MILES TOTAL PROJECT	SHEET No.	TOTAL SHEETS
04	SCL	101,237	45.2/45.8 2.7/3.3	618	736

REGISTERED CIVIL ENGINEER

April 20, 2018
PLANS APPROVAL DATE

Robert D. Mcnew No. C68559 Exp. 9-30-19 CIVIL — REGISTERED PROFESSIONAL ENGINEER — STATE OF CALIFORNIA

THE STATE OF CALIFORNIA OR ITS OFFICERS OR AGENTS SHALL NOT BE RESPONSIBLE FOR THE ACCURACY OR COMPLETENESS OF SCANNED COPIES OF THIS PLAN SHEET.

TO ACCOMPANY PLANS DATED _____

NOTES:

See Revised Standard Plan RSP T9 for tables.

Use cone spacing X for taper segment, Y for tangent segment or Z for conflict situations, as appropriate, per Table 1, unless X, Y, or Z cone spacing is shown on this sheet.

Provide at least one person to continuously maintain traffic control devices for lane closures.

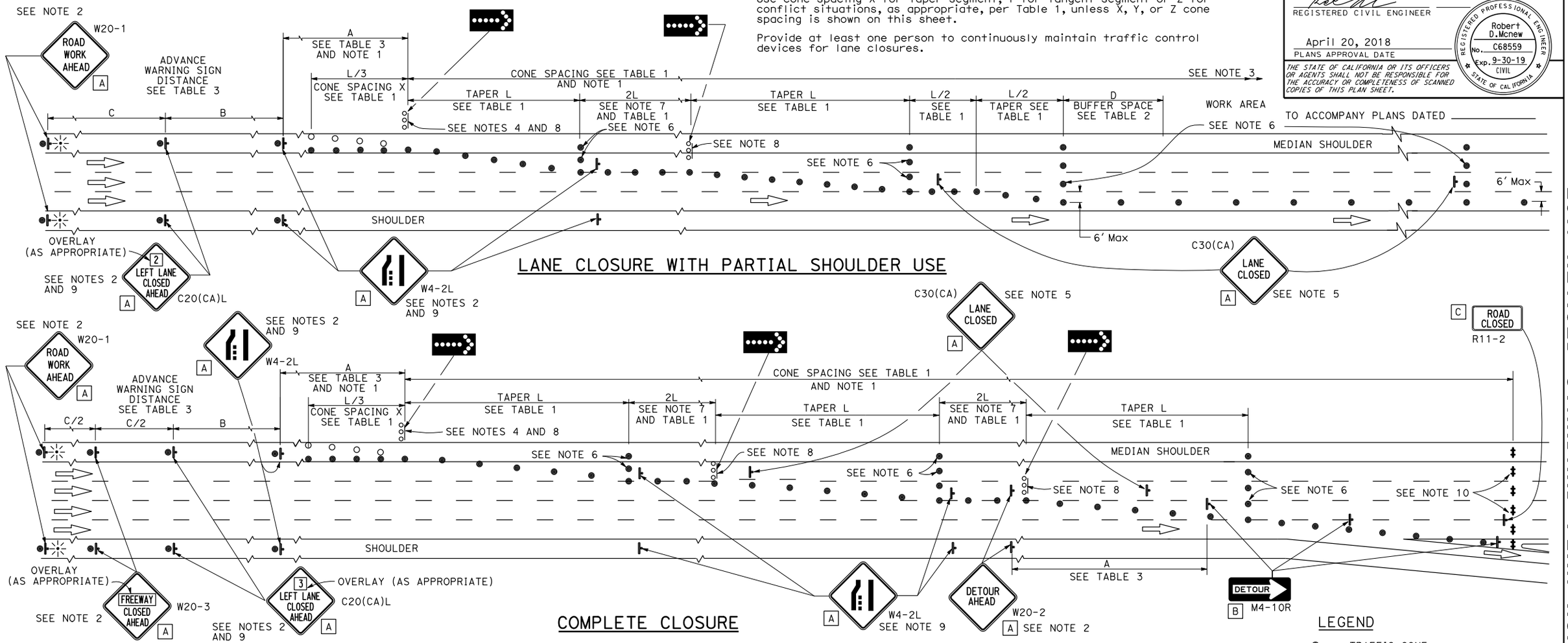

LANE CLOSURE WITH PARTIAL SHOULDER USE

COMPLETE CLOSURE

NOTES:

1. Portable delineators placed at one-half the spacing indicated for traffic cones may be used instead of cones for daytime closures only.
2. Each advance warning sign shall be equipped with at least two flags for daytime closure. Each flag shall be at least 16" x 16" in size and shall be orange or fluorescent red-orange in color. Flashing beacons shall be placed at the locations indicated for lane closure during hours of darkness.
3. A G20-2 "END ROAD WORK" sign, with minimum size of 48" x 24" as appropriate, shall be placed at the end of the lane closure unless the end of work area is obvious or ends within a larger project's limits.
4. A minimum 1500' of sight distance shall be provided where possible for vehicles approaching the first flashing arrow sign. Lane closures shall not begin at the top of crest vertical curve or on a horizontal curve.
5. Place a C30(CA) sign every 1000 ' throughout length of lane closure.
6. A minimum of 3 cones shall be placed transversely across each closed lane and shoulder at each location where a taper across a traffic lane ends and every 1000' as shown on the "Lane Closure with Partial Shoulder USE" detail. Two type II barricades may be used instead of the 3 cones. The transverse alignment of the cones or barricades on the closed shoulder may be shifted from the transverse alignment to provide access to the work.
7. The 2L tangent shown along lane lines shall be used between the L tapers required for each closed traffic lane.
8. Use one flashing arrow sign for each lane closed. The flashing arrow sign shall be Type I.
9. Lane closures on the right side using partial median shoulder as a traffic lane shall conform to the details shown except that C20(CA)R and W4-2R signs shall be used.
10. A minimum of Two Type II or III barricades shall be placed across each closed lane and shoulder at the location shown and every 2000' within the complete closure area. Within the complete closure area, the transverse alignment of the barricades on the closed shoulder may be shifted from the transverse alignment to provide access to the work.

SIGN PANEL SIZE (Min)

- A 48" x 48"
- B 48" x 18"
- C 48" x 30"

LEGEND

- TRAFFIC CONE
- TRAFFIC CONE (OPTIONAL TAPER)
- TEMPORARY TRAFFIC CONTROL SIGN
- FLASHING ARROW SIGN (FAS)
- FAS SUPPORT OR TRAILER
- PORTABLE FLASHING BEACON

STATE OF CALIFORNIA
DEPARTMENT OF TRANSPORTATION

TRAFFIC CONTROL SYSTEM FOR LANE CLOSURE ON FREEWAYS AND EXPRESSWAYS

NO SCALE

RSP T10A DATED APRIL 20, 2018 SUPERSEDES STANDARD PLAN T10A
DATED OCTOBER 30, 2015 - PAGE 251 OF THE STANDARD PLANS BOOK DATED 2015.

REVISED STANDARD PLAN RSP T10A

2015 REVISED STANDARD PLAN RSP T10A

12-15-17

© 2018 California Department of Transportation
All Rights Reserved

Dist	COUNTY	ROUTE	POST MILES TOTAL PROJECT	SHEET No.	TOTAL SHEETS
04	SCL	101,237	45.2/45.8 2.7/3.3	619	736

REGISTERED CIVIL ENGINEER

April 20, 2018
PLANS APPROVAL DATE

Robert D. Mcnew
No. C68559
Exp. 9-30-19
CIVIL
REGISTERED PROFESSIONAL ENGINEER
STATE OF CALIFORNIA

THE STATE OF CALIFORNIA OR ITS OFFICERS OR AGENTS SHALL NOT BE RESPONSIBLE FOR THE ACCURACY OR COMPLETENESS OF SCANNED COPIES OF THIS PLAN SHEET.

TO ACCOMPANY PLANS DATED _____

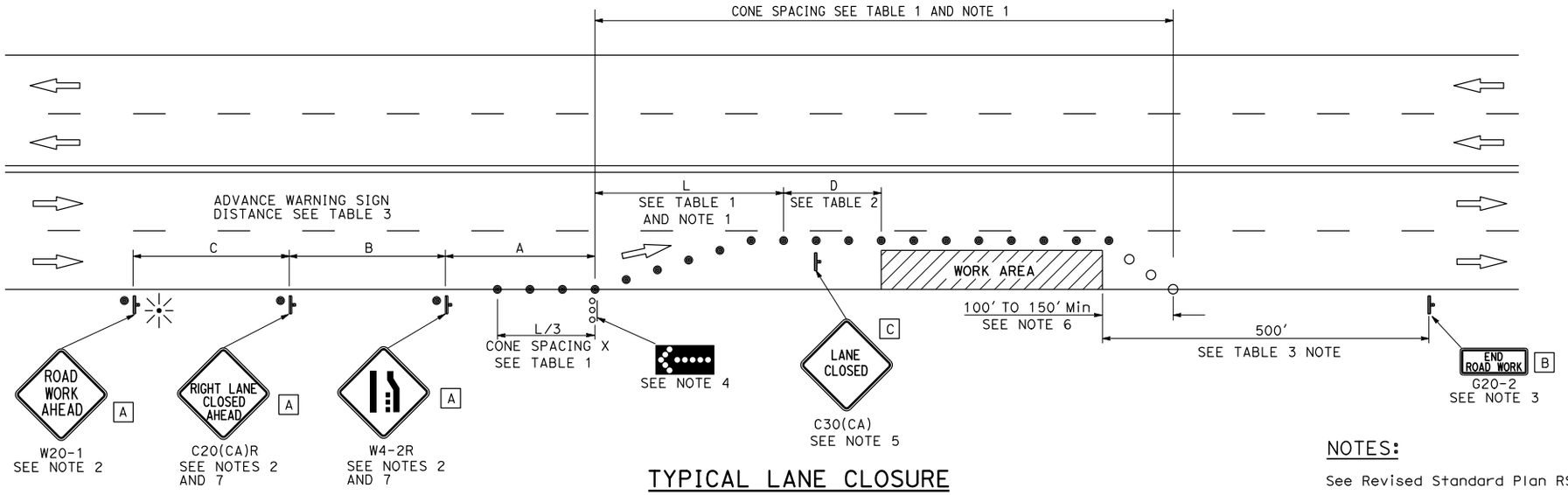

TYPICAL LANE CLOSURE

NOTES:

See Revised Standard Plan RSP T9 for tables.

Use cone spacing X for taper segment, Y for tangent segment or Z for conflict situations, as appropriate, per Table 1, unless X, Y, or Z cone spacing is shown on this sheet.

Provide at least one person to continuously maintain traffic control devices for lane closures.

NOTES:

1. Portable delineators placed at one-half the spacing indicated for traffic cones may be used instead of cones for daytime closures only.
2. Each advance warning sign shall be equipped with at least two flags for daytime closure. Each flag shall be at least 16" x 16" in size and shall be orange or fluorescent red-orange in color. Flashing beacons shall be placed at the locations indicated for lane closure during hours of darkness.
3. A G20-2 "END ROAD WORK" sign shall be placed at the end of the lane closure unless the end of work area is obvious or ends within the larger project's limits.
4. A minimum 1500' of sight distance shall be provided where possible for vehicles approaching the first flashing arrow sign. Lane closures shall not begin at the top of crest vertical curve or on a horizontal curve.
5. Place C30(CA) "LANE CLOSED" sign at 500' to 1000' intervals throughout extended work area.
6. Length may be reduced by the Engineer to address site conditions.
7. Median lane closures shall conform to the details shown except that C20(CA)L and W4-2L signs shall be used.
8. For approach speeds over 50 MPH, use the "Traffic Control System for Lane Closure on Freeways and Expressways" plan for lane closure details and requirements.

LEGEND

- TRAFFIC CONE
- TRAFFIC CONE (OPTIONAL TAPER)
- TEMPORARY TRAFFIC CONTROL SIGN
- FLASHING ARROW SIGN (FAS)
- FAS SUPPORT OR TRAILER
- PORTABLE FLASHING BEACON

SIGN PANEL SIZE (Min)

A	48" x 48"
B	36" x 18"
C	30" x 30"

STATE OF CALIFORNIA
DEPARTMENT OF TRANSPORTATION

TRAFFIC CONTROL SYSTEM FOR LANE CLOSURE ON MULTILANE CONVENTIONAL HIGHWAYS

NO SCALE

RSP T11 DATED APRIL 20, 2018 SUPERSEDES STANDARD PLAN T11
DATED OCTOBER 30, 2015 - PAGE 252 OF THE STANDARD PLANS BOOK DATED 2015.

REVISED STANDARD PLAN RSP T11

2015 REVISED STANDARD PLAN RSP T11

11-8-17

© 2018 California Department of Transportation
All Rights Reserved

Dist	COUNTY	ROUTE	POST MILES TOTAL PROJECT	SHEET No.	TOTAL SHEETS
04	SCL	101,237	45.2/45.8, 2.7/3.3	620	736

REGISTERED CIVIL ENGINEER

April 20, 2018
PLANS APPROVAL DATE

REGISTERED PROFESSIONAL ENGINEER
Robert D. Mcnew
No. C68559
Exp. 9-30-19
CIVIL
STATE OF CALIFORNIA

THE STATE OF CALIFORNIA OR ITS OFFICERS OR AGENTS SHALL NOT BE RESPONSIBLE FOR THE ACCURACY OR COMPLETENESS OF SCANNED COPIES OF THIS PLAN SHEET.

TO ACCOMPANY PLANS DATED _____

LEGEND

- TRAFFIC CONE
- TEMPORARY TRAFFIC CONTROL SIGN
- FLASHING ARROW SIGN (FAS)
- FAS SUPPORT OR TRAILER
- PORTABLE FLASHING BEACON

SIGN PANEL SIZE (Min)

- [A] 48" x 48"
- [B] 24" x 24"
- [C] 36" x 18"

NOTES:

See Revised Standard Plan RSP T9 for tables.

Use cone spacing X for taper segment, Y for tangent segment or Z for conflict situations, as appropriate, per Table 1, unless X, Y, or Z cone spacing is shown on this sheet.

Provide at least one person to continuously maintain traffic control devices for lane closures.

TYPICAL CHANGEABLE LANE CLOSURE

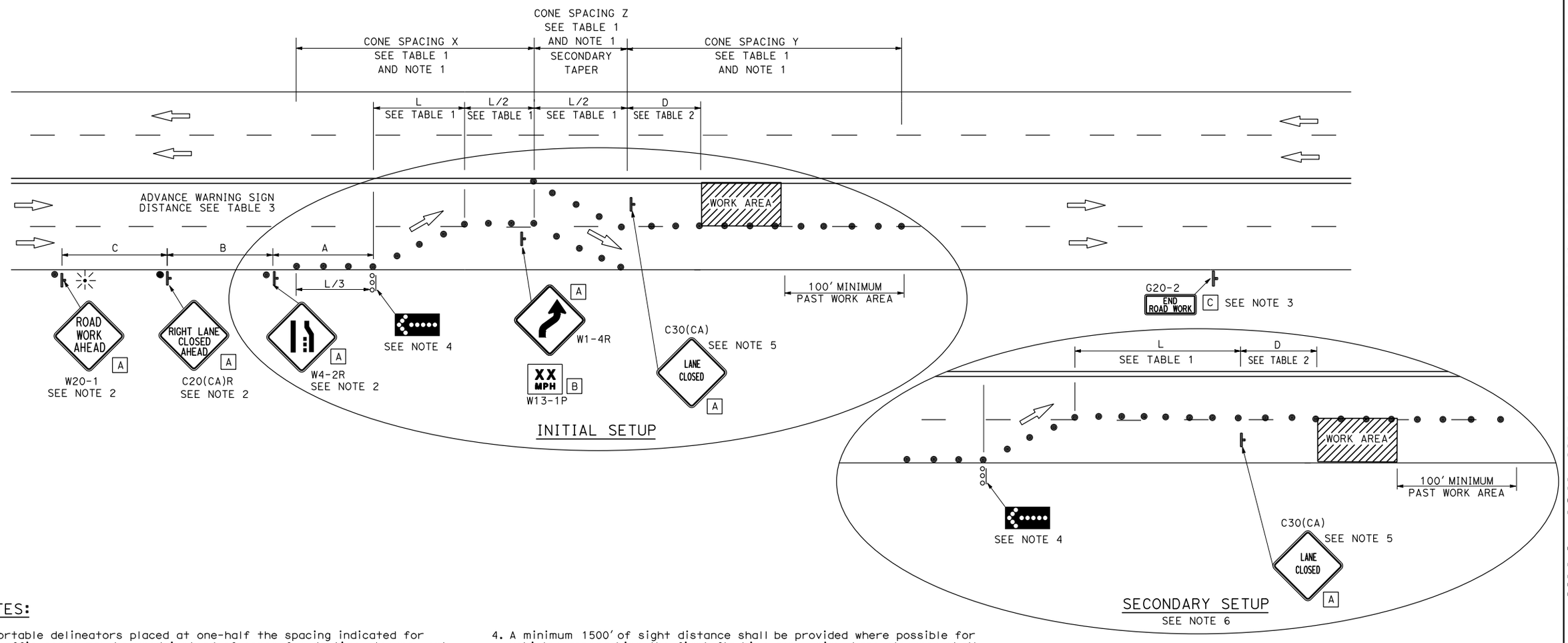

NOTES:

1. Portable delineators placed at one-half the spacing indicated for traffic cones may be used instead of cones for daytime closures only.
2. Each advance warning sign shall be equipped with at least two flags for daytime closure. Each flag shall be at least 16" x 16" in size and shall be orange or fluorescent red-orange in color. Flashing beacon shall be placed at the locations indicated for lane closure during hours of darkness.
3. A G20-2 "END ROAD WORK" sign shall be placed at the end of the lane closure unless the end of work area is obvious or ends within the larger project's limits.
4. A minimum 1500' of sight distance shall be provided where possible for vehicles approaching the first flashing arrow sign. Lane closures shall not begin at the top of crest vertical curve or on a horizontal curve.
5. Place C30(CA) "LANE CLOSED" sign at 500' to 1000' intervals throughout extended work area.
6. Relocate secondary taper to tangent location and relocate C30(CA) sign. Remove W1-4R/W13-1P sign package.

STATE OF CALIFORNIA
DEPARTMENT OF TRANSPORTATION

TRAFFIC CONTROL SYSTEM FOR CHANGEABLE LANE CLOSURE ON MULTILANE CONVENTIONAL HIGHWAYS AND EXPRESSWAYS

NO SCALE

RSP T11A DATED APRIL 20, 2018 SUPPLEMENTS THE STANDARD PLANS BOOK DATED 2015.

REVISED STANDARD PLAN RSP T11A

2015 REVISED STANDARD PLAN RSP T11A

11-9-17

© 2018 California Department of Transportation
All Rights Reserved

Dist	COUNTY	ROUTE	POST MILES TOTAL PROJECT	SHEET No.	TOTAL SHEETS
04	SCL	101,237	45.2/45.8, 2.7/3.3	621	736

REGISTERED CIVIL ENGINEER

April 20, 2018
PLANS APPROVAL DATE

REGISTERED PROFESSIONAL ENGINEER — Robert D. Mcnew — No. C68559 — Exp. 9-30-19 CIVIL — STATE OF CALIFORNIA

THE STATE OF CALIFORNIA OR ITS OFFICERS OR AGENTS SHALL NOT BE RESPONSIBLE FOR THE ACCURACY OR COMPLETENESS OF SCANNED COPIES OF THIS PLAN SHEET.

TO ACCOMPANY PLANS DATED _____

LEGEND

- TRAFFIC CONE
- TEMPORARY TRAFFIC CONTROL SIGN
- FLASHING ARROW SIGN (FAS)
- FAS SUPPORT OR TRAILER
- PORTABLE FLASHING BEACON

SIGN PANEL SIZE (Min)

- [A] 48" x 48"
- [B] 24" x 24"
- [C] 36" x 18"

NOTES:

See Revised Standard Plan RSP T9 for tables.

Use cone spacing X for taper segment, Y for tangent segment or Z for conflict situations, as appropriate, per Table 1, unless X, Y, or Z cone spacing is shown on this sheet.

Provide at least one person to continuously maintain traffic control devices for lane closures.

TYPICAL HALF ROAD CLOSURE

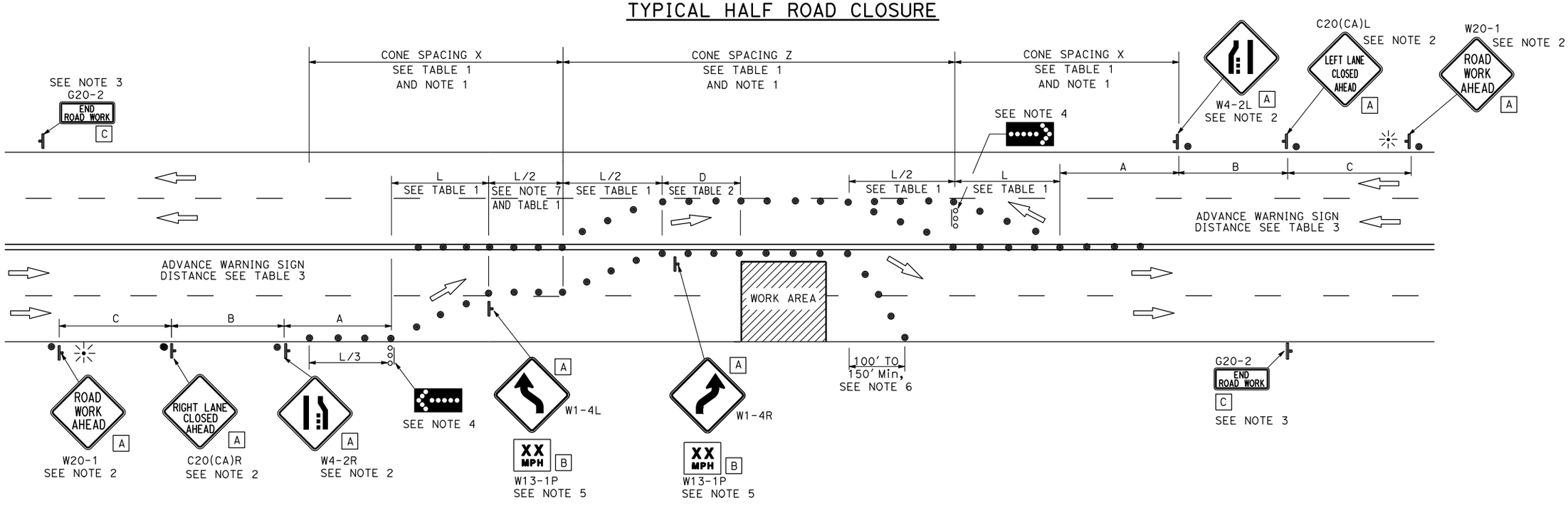

NOTES:

1. Portable delineators placed at one-half the spacing indicated for traffic cones may be used instead of cones for daytime closures only.
2. Each advance warning sign shall be equipped with at least two flags for daytime closure. Each flag shall be at least 16" x 16" in size and shall be orange or fluorescent red-orange in color. Flashing beacons shall be placed at the locations indicated for lane closure during hours of darkness.
3. A G20-2 "END ROAD WORK" sign, shall be placed at the end of the lane closure unless the end of work area is obvious or ends within the larger project's limits.
4. A minimum 1500' sight distance shall be provided where possible for vehicles approaching the first flashing arrow sign. Lane closures shall not begin at the top of crest verticle curve or on a horizontal curve.
5. Advisory speed will be determined by the Engineer, The W13-1P Plaque will not be required when advidory speed is more than the posted or maximum speed limit.
6. Length may be reduced by the Engineer to address site conditions.
7. The tangent (L/2) shall be used.

STATE OF CALIFORNIA
DEPARTMENT OF TRANSPORTATION

TRAFFIC CONTROL SYSTEM FOR HALF ROAD CLOSURE ON MULTILANE CONVENTIONAL HIGHWAYS AND EXPRESSWAYS

NO SCALE

RSP T12 DATED APRIL 20, 2018 SUPERSEDES STANDARD PLAN T12
DATED OCTOBER 30, 2015 - PAGE 253 OF THE STANDARD PLANS BOOK DATED 2015.

REVISED STANDARD PLAN RSP T12

2015 REVISED STANDARD PLAN RSP T12

11-8-17

© 2018 California Department of Transportation
All Rights Reserved

Dist	COUNTY	ROUTE	POST MILES TOTAL PROJECT	SHEET No.	TOTAL SHEETS
04	SCL	101,237	45.2/45.8, 2.7/3.3	622	736

REGISTERED CIVIL ENGINEER

April 20, 2018
PLANS APPROVAL DATE

Robert D. Mcnew
No. C68559
Exp. 9-30-19
CIVIL
REGISTERED PROFESSIONAL ENGINEER
STATE OF CALIFORNIA

THE STATE OF CALIFORNIA OR ITS OFFICERS OR AGENTS SHALL NOT BE RESPONSIBLE FOR THE ACCURACY OR COMPLETENESS OF SCANNED COPIES OF THIS PLAN SHEET.

TO ACCOMPANY PLANS DATED _____

NOTES:

See Revised Standard Plan RSP T9 for tables.

Use cone spacing X for taper segment, Y for tangent segment or Z for conflict situations, as appropriate, per Table 1, unless X, Y, or Z cone spacing is shown on this sheet.

Provide at least one person to continuously maintain traffic control devices for lane closures.

TYPICAL LANE CLOSURE WITH REVERSIBLE CONTROL

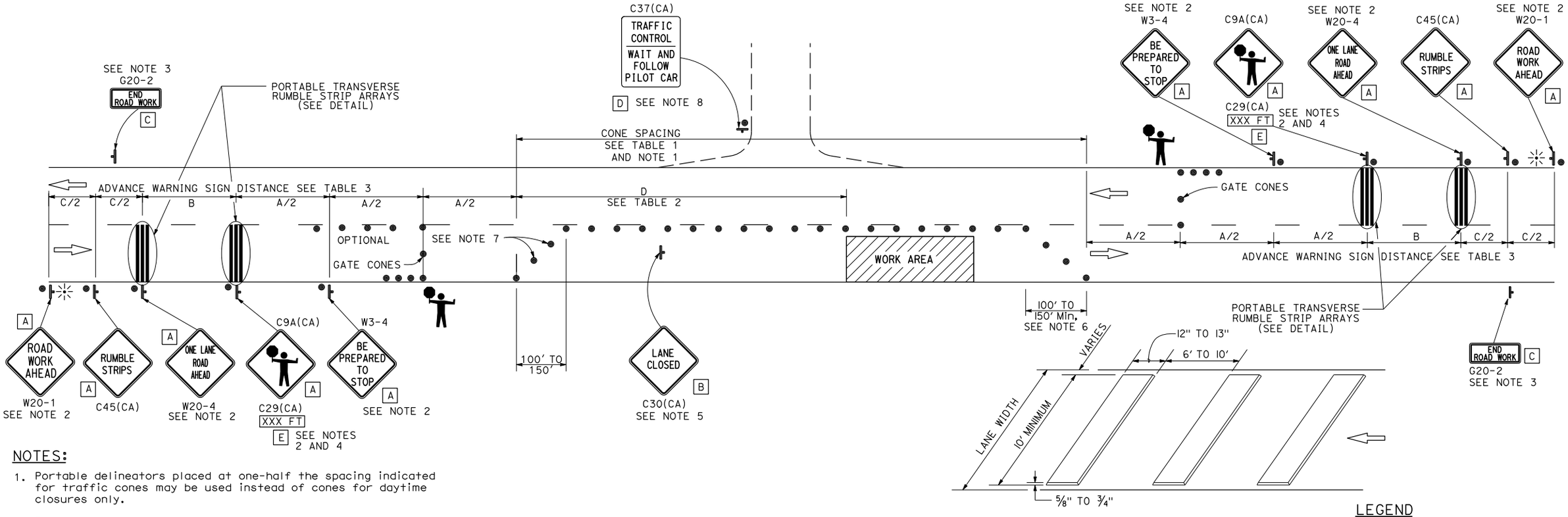

NOTES:

1. Portable delineators placed at one-half the spacing indicated for traffic cones may be used instead of cones for daytime closures only.
2. Each advance warning sign shall be equipped with at least two flags for daytime closure. Each flag shall be at least 16" x 16" in size and shall be orange or fluorescent red-orange in color. Flashing beacons shall be placed at the locations indicated for lane closure during hours of darkness.
3. A G20-2 "END ROAD WORK" sign, shall be placed at the end of the lane closure unless the end of work area is obvious or ends within the larger project's limits.
4. An optional C29(CA) sign may be placed below the C9A(CA) sign.
5. Place C30(CA) "LANE CLOSED" sign at 500' to 1000' intervals throughout extended work area. They are optional if the work area is visible from nthe flagger station.
6. Length may be reduced by the Engineer to address site conditions.
7. Either traffic cones or barricades shall be placed on the taper. Barricades shall be Type I, II, or III.
8. When a pilot car is used, place a C37(CA) "TRAFFIC CONTROL-WAIT AND FOLLOW PILOT CAR" sign with black legend on white background at all intersections, driveways and alleys without a flagger within the traffic control area.

PORTABLE TRANSVERSE RUMBLE STRIP ARRAY DETAIL

SIGN PANEL SIZE (Min)

A	48" x 48"
B	30" x 30"
C	36" x 18"
D	36" x 42"
E	20" x 7"

LEGEND

- TRAFFIC CONE
- TEMPORARY TRAFFIC CONTROL SIGN
- PORTABLE FLASHING BEACON
- FLAGGER

STATE OF CALIFORNIA
DEPARTMENT OF TRANSPORTATION

TRAFFIC CONTROL SYSTEM FOR LANE CLOSURE ON TWO LANE CONVENTIONAL HIGHWAYS

NO SCALE

RSP T13 DATED APRIL 20, 2018 SUPERSEDES STANDARD PLAN T13
DATED OCTOBER 30, 2015 - PAGE 254 OF THE STANDARD PLANS BOOK DATED 2015.

REVISED STANDARD PLAN RSP T13

2015 REVISED STANDARD PLAN RSP T13

11-8-17

© 2018 California Department of Transportation
All Rights Reserved

TYPICAL RAMP CLOSURES

SIGN PANEL SIZE (Min)

- A 48" x 48"
- B 48" x 30"
- C 36" x 36"
- D 48" x 36"

LEGEND

- TRAFFIC CONE
- TEMPORARY TRAFFIC CONTROL SIGN
- BARRICADES
- PORTABLE FLASHING BEACON

Dist	COUNTY	ROUTE	POST MILES TOTAL PROJECT	SHEET No.	TOTAL SHEETS
04	SCL	101,237	45.2/45.8, 2.7/3.3	623	736

REGISTERED CIVIL ENGINEER

April 20, 2018
PLANS APPROVAL DATE

Robert D. Mcnew, No. C68559, Exp. 9-30-19, CIVIL, REGISTERED PROFESSIONAL ENGINEER, STATE OF CALIFORNIA

THE STATE OF CALIFORNIA OR ITS OFFICERS OR AGENTS SHALL NOT BE RESPONSIBLE FOR THE ACCURACY OR COMPLETENESS OF SCANNED COPIES OF THIS PLAN SHEET.

TO ACCOMPANY PLANS DATED _____

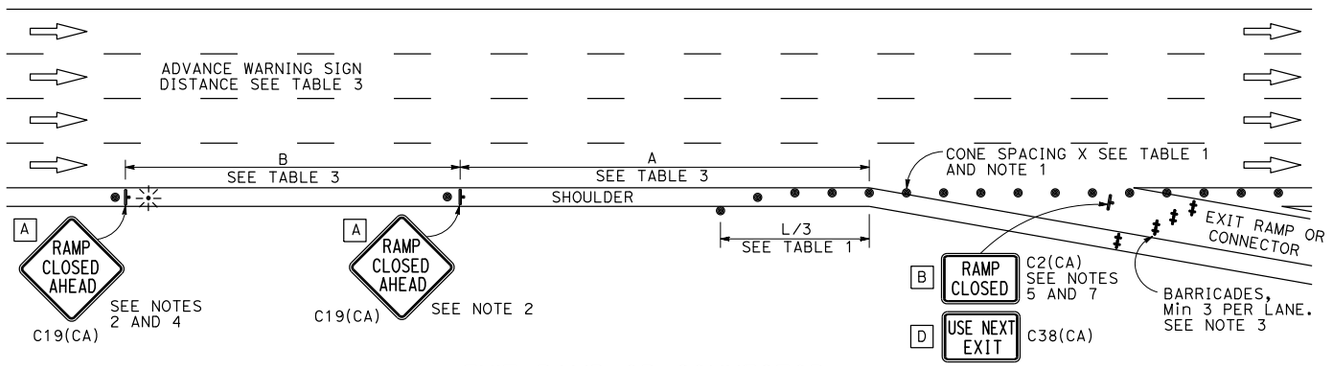

EXIT RAMP OR CONNECTOR

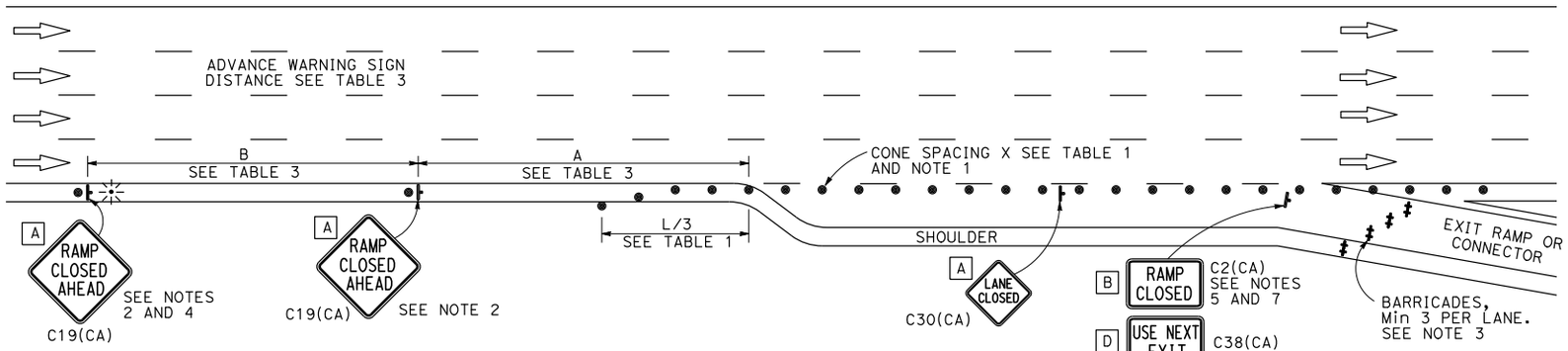

EXIT RAMP OR CONNECTOR WITH ADDITIONAL LANE

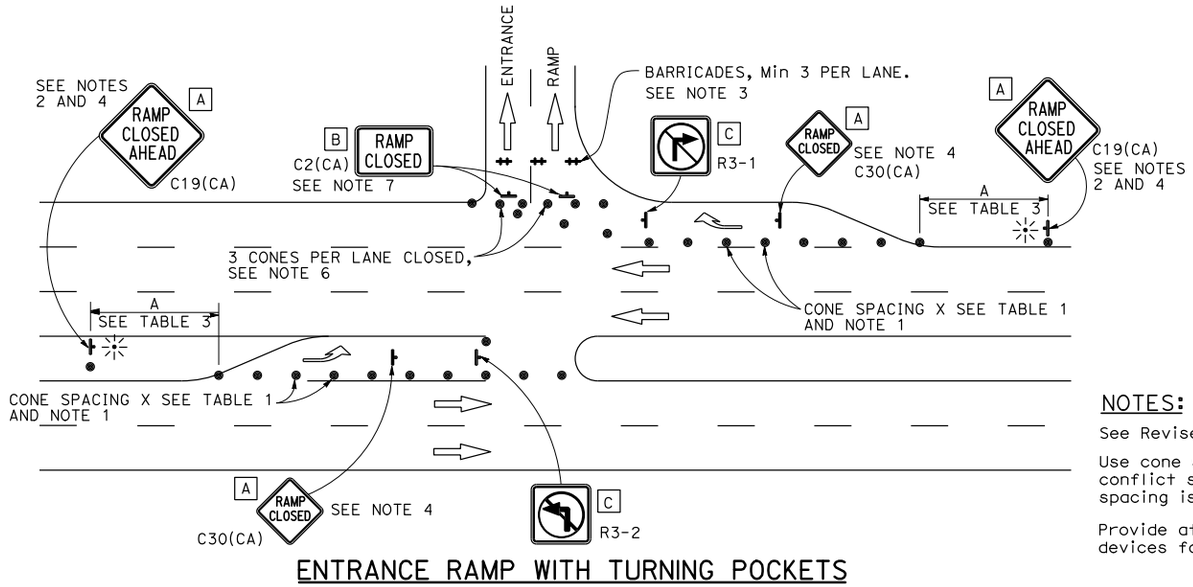

ENTRANCE RAMP WITH TURNING POCKETS

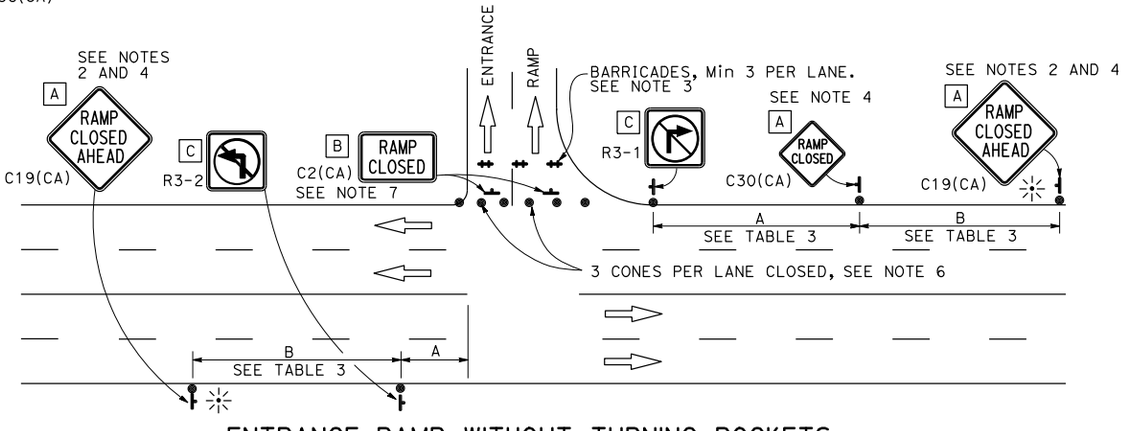

ENTRANCE RAMP WITHOUT TURNING POCKETS

NOTES:

1. Portable delineators placed at one-half the spacing indicated for traffic cones may be used instead of cones for daytime closures only.
2. Each advance warning C19(CA) "RAMP CLOSED AHEAD" sign shall be equipped with at least two flags for daytime closure. Each flag shall be at least 16" x 16" in size and shall be orange or fluorescent red-orange in color. A flashing beacon shall be placed on top of the first C19(CA) sign during hours of darkness.
3. Barricades shall be Type I, II or III for closures lastind one week or less ans Type III for closures lasting longer than one week.
4. In addition to placing the C19(CA) "RAMP CLOSED AHEAD" and C30(CA) "RAMP CLOSED" signs, black on orange overlay plates with the word "closed" may be mounted. As directed by the Engineer on all guide signs that refer to the closed ramp. The letter size on the overlay shall be the same as the guide sign.
5. The existing "EXIT" signs shall be covered during ramp closures.
6. A minimum of 3 cones shall be placed transversely across each closed lane and shoulder.
7. C2(CA) sign shall be black and white.

NOTES:

See Revised Standard Plan RSP T9 for tables.

Use cone spacing X for taper segment, Y for tangent segment or Z for conflict situations, as appropriate, per Table 1, unless X, Y, or Z cone spacing is shown on this sheet.

Provide at least one person to continuously maintain traffic control devices for lane closures.

STATE OF CALIFORNIA
DEPARTMENT OF TRANSPORTATION

TRAFFIC CONTROL SYSTEM FOR RAMP CLOSURE

NO SCALE

RSP T14 DATED APRIL 20, 2018 SUPERSEDES STANDARD PLAN T14
DATED OCTOBER 30, 2015 - PAGE 255 OF THE STANDARD PLANS BOOK DATED 2015.

REVISED STANDARD PLAN RSP T14

2015 REVISED STANDARD PLAN RSP T14

11-8-17

© 2017 California Department of Transportation
All Rights Reserved

Dist	COUNTY	ROUTE	POST MILES TOTAL PROJECT	SHEET No.	TOTAL SHEETS
04	SCL	101,237	45.2/45.8, 2.7/3.3	624	736

REGISTERED CIVIL ENGINEER

July 21, 2017
PLANS APPROVAL DATE

REGISTERED PROFESSIONAL ENGINEER
Robert D.Mcnew
No. C68559
Exp. 9-30-17
CIVIL
STATE OF CALIFORNIA

THE STATE OF CALIFORNIA OR ITS OFFICERS OR AGENTS SHALL NOT BE RESPONSIBLE FOR THE ACCURACY OR COMPLETENESS OF SCANNED COPIES OF THIS PLAN SHEET.

TO ACCOMPANY PLANS DATED _____

NOTES:

1. Only signs related to pedestrians are shown. For all other signs see appropriate T-sheets.
2. Barricades closing sidewalk shall cover the full width of the sidewalk. Use R9-11 sign when there are destination points between the detour and the work area. Locate the R9-11 sign to allow pedestrian access.
3. Advance warning sign is not required if the work area is within the limits of a larger work zone. Sign shall be equipped with at least two flags for daytime closure. Each flag shall be orange or fluorescent red-orange in color.

NOTES:

See Revised Standard Plan RSP T9 for tables.

Use cone spacing X for taper segment, Y for tangent segment or Z for conflict situations, as appropriate, per Table 1 unless X,Y, or Z cone spacing is shown on this sheet.

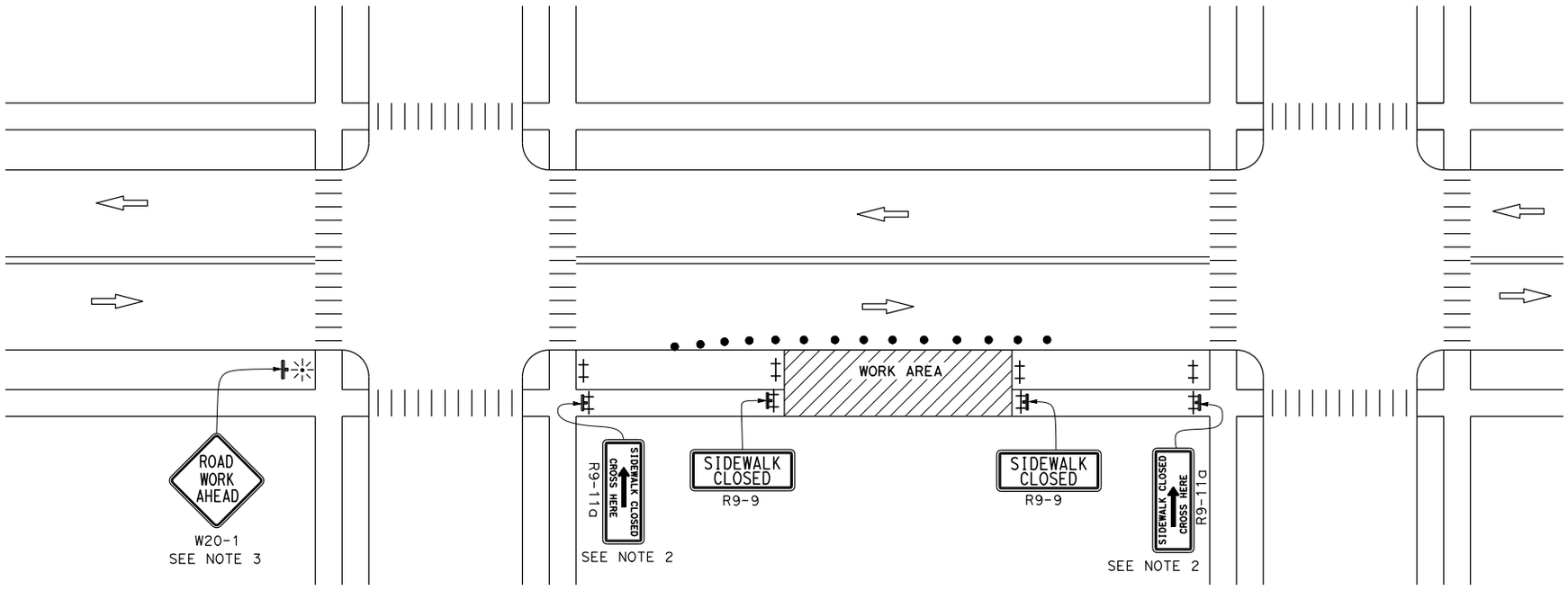

LEGEND:

- BARRICADE
- TRAFFIC CONE
- PORTABLE FLASHING BEACON
- SIGN
- TEMPORARY TRAFFIC CONTROL SIGN ON BARRICADE

SIGN PANEL SIZE (Min)

SIGN DESIGNATION	SIGN OR PLAQUE	SIGN SIZE
R9-9	SIDEWALK CLOSED	24" x 12"
R9-11	SIDEWALK CLOSED AHEAD CROSS HERE	24" x 18"
R9-11a	SIDEWALK CLOSED CROSS HERE	24" x 12"
W20-1	ROAD WORK AHEAD	36" x 36"

STATE OF CALIFORNIA
DEPARTMENT OF TRANSPORTATION

TEMPORARY PEDESTRIAN ACCESS ROUTES TYPICAL SIDEWALK CLOSURE AND PEDESTRIAN DETOUR

NO SCALE

RSP T30 DATED JULY 21, 2017 SUPPLEMENTS THE STANDARD PLANS BOOK DATED 2015.

REVISED STANDARD PLAN RSP T30

2015 REVISED STANDARD PLAN RSP T30

6-27-17

© 2017 California Department of Transportation
All Rights Reserved

Dist	COUNTY	ROUTE	POST MILES TOTAL PROJECT	SHEET No.	TOTAL SHEETS
04	SCL	101,237	45.2/45.8, 2.7/3.3	625	736

REGISTERED CIVIL ENGINEER

July 21, 2017
PLANS APPROVAL DATE

REGISTERED PROFESSIONAL ENGINEER
Robert D. Mcnew
No. C68559
Exp. 9-30-17
CIVIL
STATE OF CALIFORNIA

THE STATE OF CALIFORNIA OR ITS OFFICERS OR AGENTS SHALL NOT BE RESPONSIBLE FOR THE ACCURACY OR COMPLETENESS OF SCANNED COPIES OF THIS PLAN SHEET.

TO ACCOMPANY PLANS DATED _____

NOTES:

1. Only signs related to pedestrians are shown. For all other signs see appropriate T-sheets.
2. Separate pedestrian walkway from traffic and work zone activities, when temporary walkway is adjacent to traffic.
3. The temporary pedestrian access route must not lead into conflict with vehicles or work.
4. Advance warning sign is not required if the work area is within the limits of a larger work zone. Sign shall be equipped with at least two flags for daytime closure. Each flag shall be orange or fluorescent red-orange in color.
5. All devices used to channelize pedestrian flow must connect such that gaps do not allow pedestrians to stray from the channelized path.
6. Barricades closing sidewalk shall cover the full width of the sidewalk.
7. Separate the temporary pedestrian access route from traffic using a temporary barrier and a crash cushion if necessary.
8. When it is not possible to maintain a minumum of 60 inches throughout the length of the pedestrian route, maintain a minimum width of 48 inches and provide a 60 X 60-inch passing space at least every 200 feet.
9. See Revised Standard Plan RSP A88A for detectable warning surface for curb ramps to apply to temporary curb ramps.
10. See Revised Standard Plan RSP T34 for temporary curb ramp options.

NOTES:

See Revised Standard Plan RSP T9 for tables.

Use cone spacing X for taper segment, Y for tangent segment or Z for conflict situations, as appropriate, per Table 1 unless X,Y, or Z cone spacing is shown on this sheet.

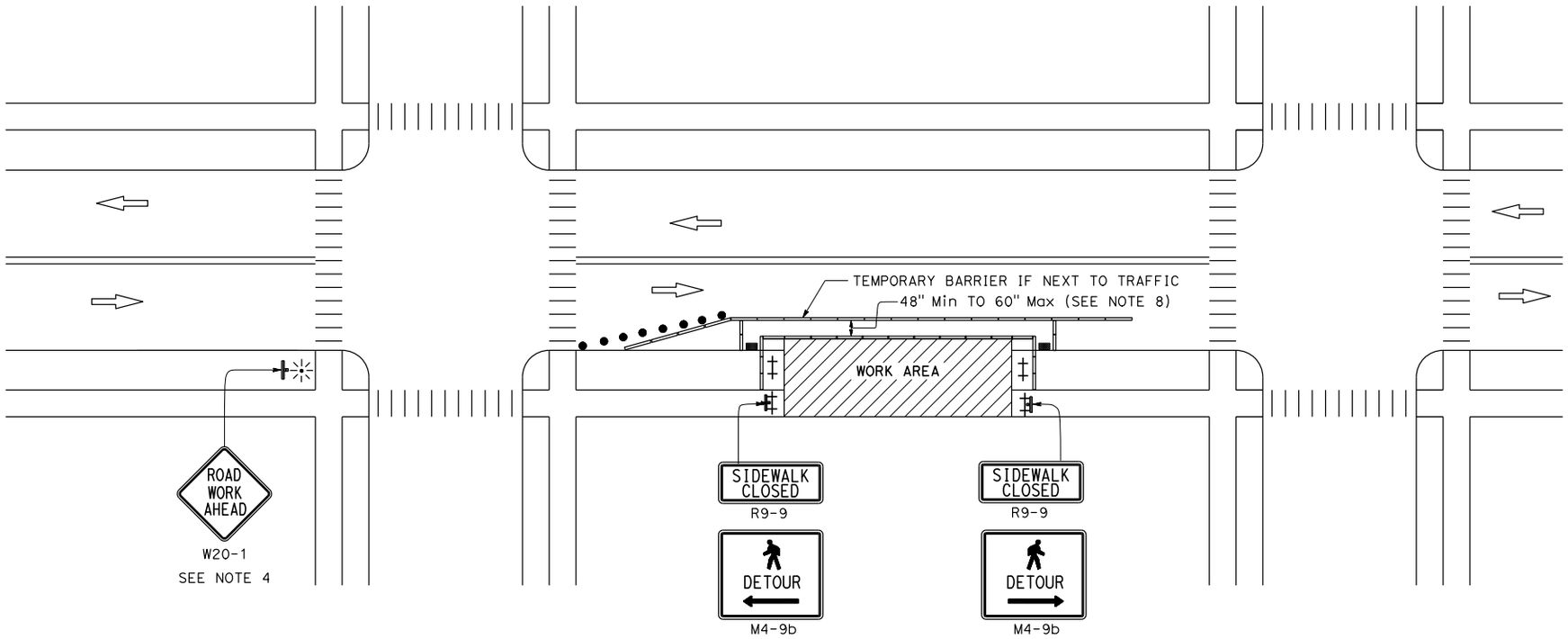

LEGEND:

- BARRICADE
- TEMPORARY CURB RAMP
- CHANNELIZING DEVICE
- TRAFFIC CONE
- PORTABLE FLASHING BEACON
- TEMPORARY TRAFFIC CONTROL SIGN
- TEMPORARY TRAFFIC CONTROL SIGN ON BARRICADE

SIGN PANEL SIZE (Min)

SIGN DESIGNATION	SIGN OR PLAQUE	SIGN SIZE
M4-9b	PEDESTRIAN DETOUR	30" x 24"
R9-9	SIDEWALK CLOSED	24" x 12"
W20-1	ROAD WORK AHEAD	36" x 36"

STATE OF CALIFORNIA
DEPARTMENT OF TRANSPORTATION

TEMPORARY PEDESTRIAN ACCESS ROUTES
TYPICAL SIDEWALK DIVERSION WITHIN ROADBED

NO SCALE

RSP T31 DATED JULY 21, 2017 SUPPLEMENTS THE STANDARD PLANS BOOK DATED 2015.

REVISED STANDARD PLAN RSP T31

2015 REVISED STANDARD PLAN RSP T31

6-27-17

© 2017 California Department of Transportation
All Rights Reserved

NOTES:

1. Only signs related to pedestrians are shown. For all other signs see appropriate T-sheets.
2. Barricades closing sidewalk shall cover the full width of the sidewalk. Use R9-11 sign when there are destination points between the detour and the work area. Locate the R9-11 sign to allow pedestrian access.
3. Advance warning sign is not required if the work area is within the limits of a larger work zone. Sign shall be equipped with at least two flags for daytime closure. Each flag shall be orange or fluorescent red-orange in color.

NOTES:

See Revised Standard Plan RSP T9 for tables.

Use cone spacing X for taper segment, Y for tangent segment or Z for conflict situations, as appropriate, per Table 1 unless X,Y, or Z cone spacing is shown on this sheet.

Dist	COUNTY	ROUTE	POST MILES TOTAL PROJECT	SHEET No.	TOTAL SHEETS
04	SCL	101,237	45.2/45.8, 2.7/3.3	626	736

REGISTERED CIVIL ENGINEER

July 21, 2017
PLANS APPROVAL DATE

REGISTERED PROFESSIONAL ENGINEER — Robert D. Mcnew — No. C68559 — Exp. 9-30-17 — CIVIL — STATE OF CALIFORNIA

THE STATE OF CALIFORNIA OR ITS OFFICERS OR AGENTS SHALL NOT BE RESPONSIBLE FOR THE ACCURACY OR COMPLETENESS OF SCANNED COPIES OF THIS PLAN SHEET.

TO ACCOMPANY PLANS DATED _____

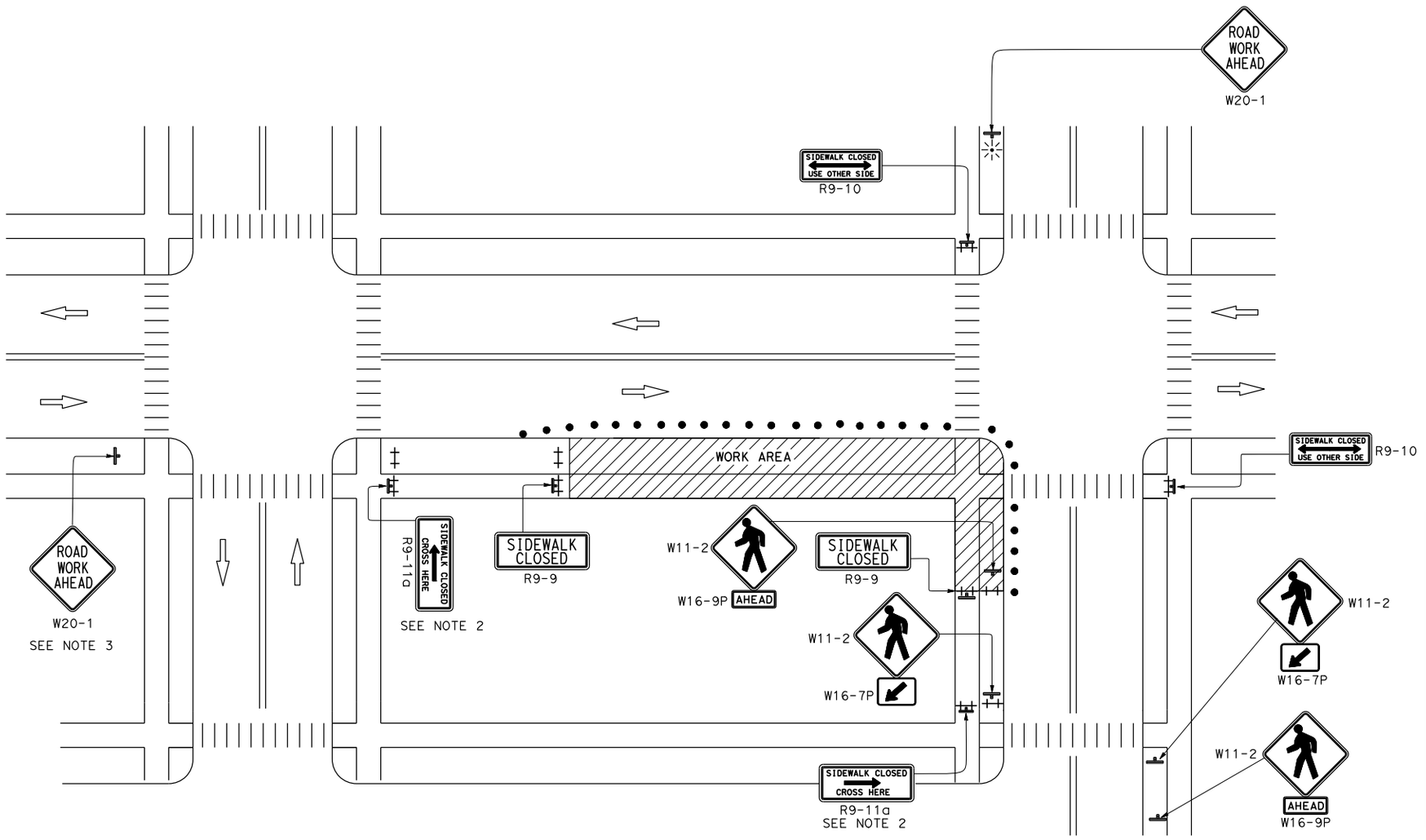

LEGEND:

- ‡ BARRICADE
- • TRAFFIC CONE
- ✳ PORTABLE FLASHING BEACON
- ⊢ TEMPORARY TRAFFIC CONTROL SIGN
- ⊢‡ TEMPORARY TRAFFIC CONTROL SIGN ON BARRICADE

SIGN PANEL SIZE (Min)

SIGN DESIGNATION	SIGN OR PLAQUE	SIGN SIZE
R9-9	SIDEWALK CLOSED	24" x 12"
R9-10	SIDEWALK CLOSED USE OTHER SIDE	24" x 12"
R9-11	SIDEWALK CLOSED AHEAD CROSS HERE	24" x 18"
R9-11a	SIDEWALK CLOSED CROSS HERE	24" x 12"
W11-2	PEDESTRIAN	36" x 36"
W16-7P	DIAGONAL DOWNWARD POINTING ARROW (PLAQUE)	24" x 12"
W16-9P	AHEAD (PLAQUE)	24" x 12"
W20-1	ROAD WORK AHEAD	36" x 36"

STATE OF CALIFORNIA
DEPARTMENT OF TRANSPORTATION

TEMPORARY PEDESTRIAN ACCESS ROUTES TYPICAL SIDEWALK/CROSSWALK CLOSURE AND PEDESTRIAN DETOUR

NO SCALE

RSP T32 DATED JULY 21, 2017 SUPPLEMENTS THE STANDARD PLANS BOOK DATED 2015.

REVISED STANDARD PLAN RSP T32

2015 REVISED STANDARD PLAN RSP T32

6-27-17

© 2017 California Department of Transportation
All Rights Reserved

Dist	COUNTY	ROUTE	POST MILES TOTAL PROJECT	SHEET No.	TOTAL SHEETS
04	SCL	101,237	45.2/45.8, 2.7/3.3	627	736

REGISTERED CIVIL ENGINEER

July 21, 2017
PLANS APPROVAL DATE

REGISTERED PROFESSIONAL ENGINEER
Robert D.Mcnew
No. C68559
Exp. 9-30-17
CIVIL
STATE OF CALIFORNIA

THE STATE OF CALIFORNIA OR ITS OFFICERS OR AGENTS SHALL NOT BE RESPONSIBLE FOR THE ACCURACY OR COMPLETENESS OF SCANNED COPIES OF THIS PLAN SHEET.

TO ACCOMPANY PLANS DATED _____

RAMP				HAND RAIL		EDGE PROTECTION	
SLOPE	CROSS SLOPE	WIDTH	LENGTH	HEIGHT RIGHT SIDE	HEIGHT LEFT SIDE	RAIL RIGHT SIDE	RAIL LEFT SIDE
A	B	C	D	E	F	G	H
8.3% OR LESS	2.0% OR LESS	48 INCHES OR GREATER	30 FEET OR LESS	34 TO 38 INCHES	34 TO 38 INCHES	WITHIN 2 INCHES FROM GROUND	WITHIN 2 INCHES FROM GROUND
TOP LANDING				BOTTOM LANDING			
CROSS SLOPE	SLOPE	WIDTH	DEPTH	CROSS SLOPE	SLOPE	WIDTH	DEPTH
I	J	K	L	M	N	O	P
2.0% OR LESS	2.0% OR LESS	48 INCHES OR GREATER	60 INCHES OR GREATER	2.0% OR LESS	2.0% OR LESS	48 INCHES OR GREATER	60 INCHES OR GREATER

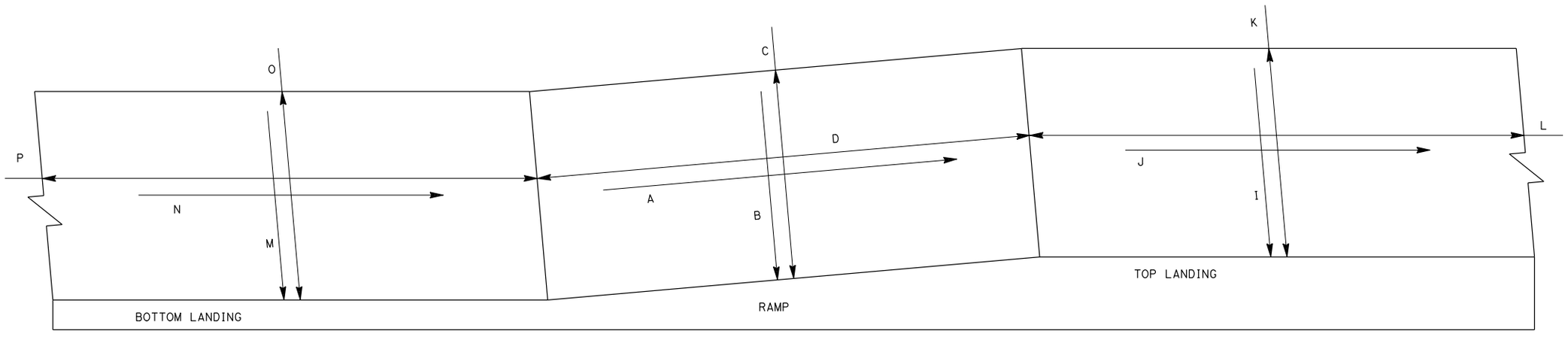

STATE OF CALIFORNIA
DEPARTMENT OF TRANSPORTATION

TEMPORARY PEDESTRIAN ACCESS ROUTES
RAMP

NO SCALE

RSP T33 DATED JULY 21, 2017 SUPPLEMENTS THE STANDARD PLANS BOOK DATED 2015.

REVISED STANDARD PLAN RSP T33

2015 REVISED STANDARD PLAN RSP T33

5-30-17

© 2017 California Department of Transportation
All Rights Reserved

Dist	COUNTY	ROUTE	POST MILES TOTAL PROJECT	SHEET No.	TOTAL SHEETS
04	SCL	101,237	45.2/45.8, 2.7/3.3	628	736

REGISTERED CIVIL ENGINEER

July 21, 2017
PLANS APPROVAL DATE

REGISTERED PROFESSIONAL ENGINEER
Robert D.Mcnew
No. C68559
Exp. 9-30-17
CIVIL
STATE OF CALIFORNIA

THE STATE OF CALIFORNIA OR ITS OFFICERS OR AGENTS SHALL NOT BE RESPONSIBLE FOR THE ACCURACY OR COMPLETENESS OF SCANNED COPIES OF THIS PLAN SHEET.

TO ACCOMPANY PLANS DATED _____

CURB RAMP			TOP LANDING				DETECTABLE WARNING SURFACE
SLOPE	CROSS SLOPE	WIDTH	CROSS SLOPE	SLOPE	WIDTH	DEPTH	DEPTH
A	B	C	D	E	F	G	K
8.3% OR LESS	2.0% OR LESS	48 INCHES OR GREATER	2.0% OR LESS	2.0% OR LESS	48 INCHES OR GREATER	60 INCHES OR GREATER	MINIMUM 36 INCHES

NOTES: If the above requirements cannot be met, on existing sites with space limitations, the following slopes are allowed:

For a maximum rise of 6 inches a slope between 1:12 to 1:10 is allowed.
For a maximum rise of 3 inches a slope between 1:10 to 1:8 is allowed.

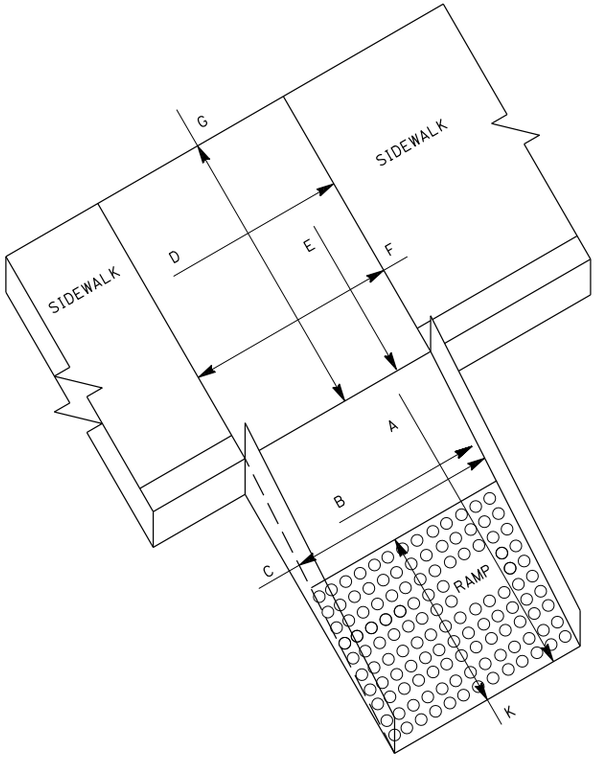

OPTION A

SHOWN WITH SIDE EDGE

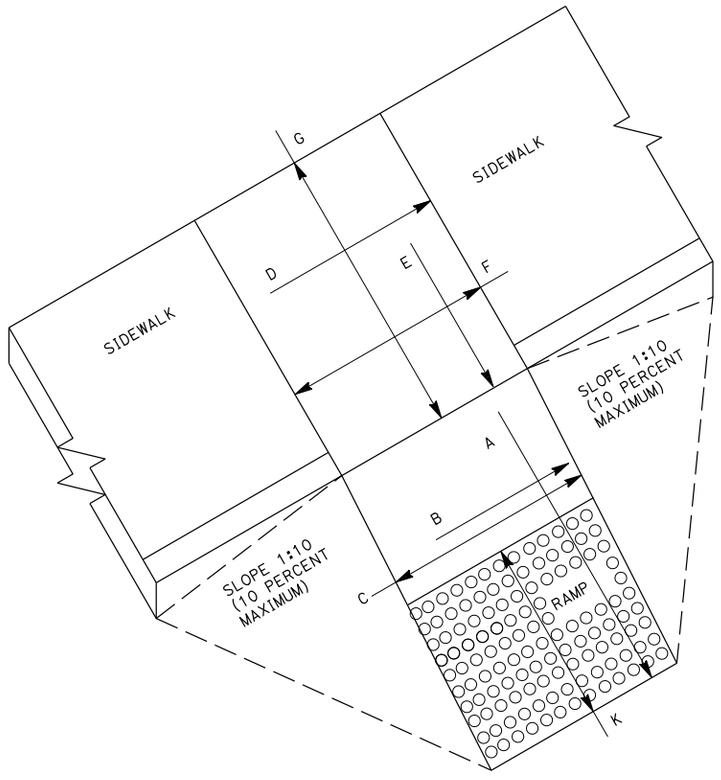

OPTION B

SHOWN WITH SIDE APRON

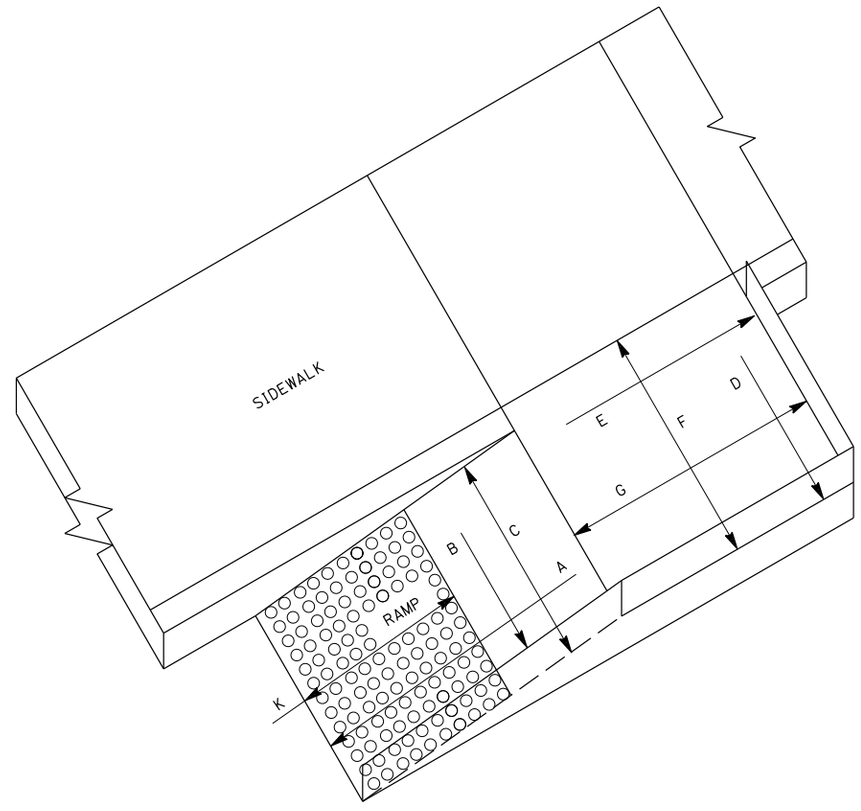

OPTION C

PARALLEL RAMP

SHOWN WITH SIDE EDGE

STATE OF CALIFORNIA
DEPARTMENT OF TRANSPORTATION

TEMPORARY PEDESTRIAN ACCESS ROUTES CURB RAMP OPTIONS

NO SCALE

RSP T34 DATED JULY 21, 2017 SUPPLEMENTS THE STANDARD PLANS BOOK DATED 2015.

REVISED STANDARD PLAN RSP T34

2015 REVISED STANDARD PLAN RSP T34

6-9-17

© 2017 California Department of Transportation
All Rights Reserved

Dist	COUNTY	ROUTE	POST MILES TOTAL PROJECT	SHEET No.	TOTAL SHEETS
04	SCL	101,237	45.2/45.8, 2.7/3.3	629	736

REGISTERED CIVIL ENGINEER

July 21, 2017
PLANS APPROVAL DATE

REGISTERED PROFESSIONAL ENGINEER — Gary Wang — No. C58298 — Exp. 6-30-18 — CIVIL — STATE OF CALIFORNIA

THE STATE OF CALIFORNIA OR ITS OFFICERS OR AGENTS SHALL NOT BE RESPONSIBLE FOR THE ACCURACY OR COMPLETENESS OF SCANNED COPIES OF THIS PLAN SHEET.

TO ACCOMPANY PLANS DATED _____

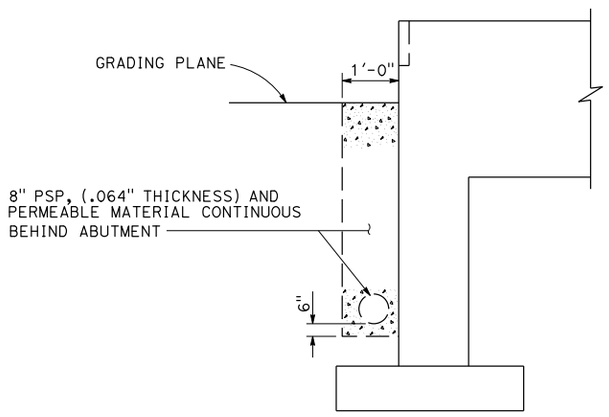

BRIDGE DETAIL 3-5
8" PSP AND PERMEABLE MATERIAL

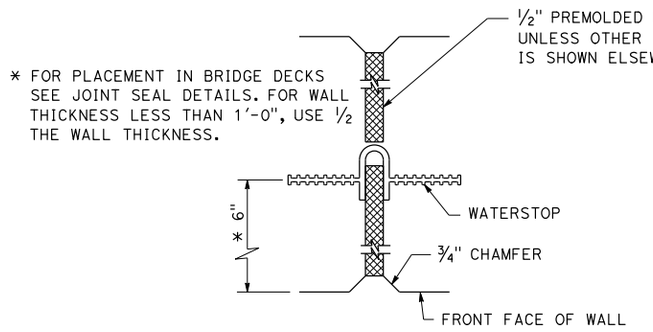

BRIDGE DETAIL 3-4
WALL EXPANSION JOINT

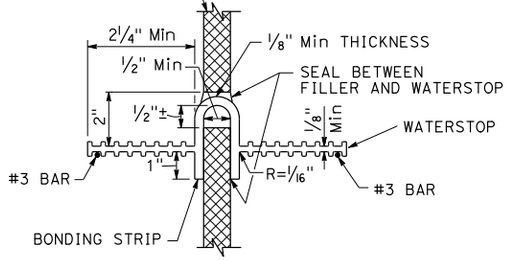

BRIDGE DETAIL 3-6
WATERSTOP

NOTES:

1. Holes will be permitted in the outer ½" of the web for wire, rings, etc. Tie web to #3 reinforcing bars @ 12 maximum intervals to support the waterstop in proper position during concrete placement. Alternative detail may be submitted for approval of the Engineer.
2. Waterstop to have 5 or more pairs of raised ribs to provide 0.1 square inch minimum rib cross-section area on each half of the waterstop.

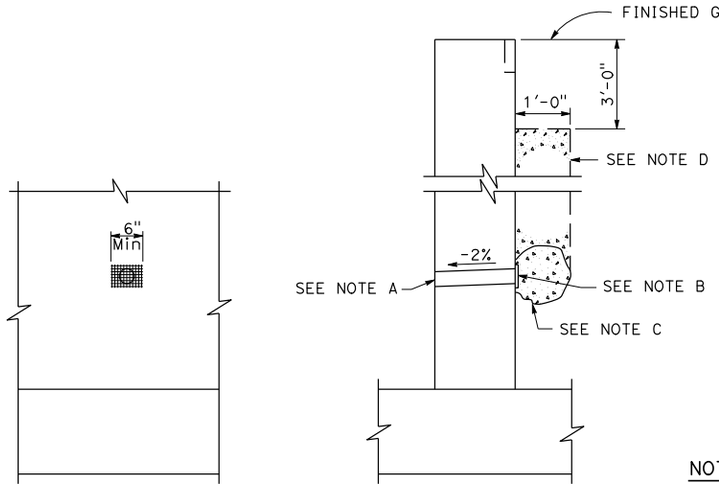

ELEVATION SECTION

BRIDGE DETAIL 3-1
WEEP HOLE AND PERVIOUS BACKFILL

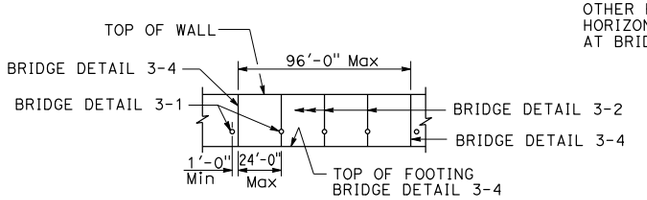

BRIDGE DETAIL 3-3
WALL EXPANSION JOINTS AND WEAKENED PLANES

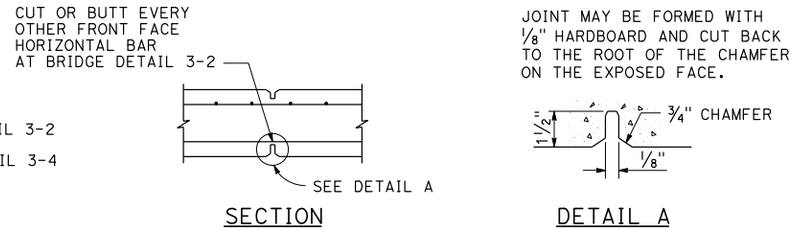

SECTION DETAIL A

BRIDGE DETAIL 3-2
WEAKENED PLANES

NOTES:

A. 4" ø Drains @ 25'-0" maximum center to center. For walls adjacent to sidewalks or curbs, provide 4" plastic pipe under the sidewalk to discharge thru curb face. Exposed wall drains shall be located 3"± above finished grade.

B. 6" square aluminum or galvanized steel wire ¼" mesh hardware cloth, minimum wire diameter 0.025". Anchor firmly to backface.

C. One cubic foot pervious backfill material in a nonwoven filter fabric, securely tied.

D. Pervious backfill material continuous behind retaining wall or abutment.

STATE OF CALIFORNIA
DEPARTMENT OF TRANSPORTATION

BRIDGE DETAILS

NO SCALE

RSP B0-3 DATED JULY 21, 2017 SUPERSEDES STANDARD PLAN B0-3
DATED OCTOBER 30, 2015 - PAGE 277 OF THE STANDARD PLANS BOOK DATED 2015.

REVISED STANDARD PLAN RSP B0-3

2015 REVISED STANDARD PLAN RSP B0-3

5-22-17

© 2016 California Department of Transportation
All Rights Reserved

Dist	COUNTY	ROUTE	POST MILES TOTAL PROJECT	SHEET No.	TOTAL SHEETS
04	SCL	101,237	45.2/45.8, 2.7/3.3	630	736

REGISTERED CIVIL ENGINEER

July 15, 2016
PLANS APPROVAL DATE

REGISTERED PROFESSIONAL ENGINEER — Tillat Satter — No. C42892 — Exp. 3-31-18 — CIVIL — STATE OF CALIFORNIA

THE STATE OF CALIFORNIA OR ITS OFFICERS OR AGENTS SHALL NOT BE RESPONSIBLE FOR THE ACCURACY OR COMPLETENESS OF SCANNED COPIES OF THIS PLAN SHEET.

TO ACCOMPANY PLANS DATED _____

ELECTROLIER PEDESTAL DETAILS

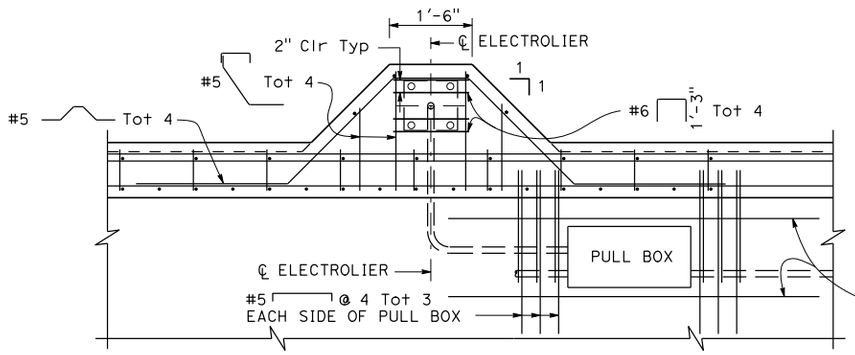

PLAN

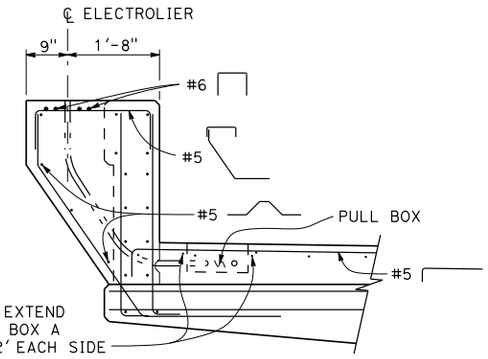

SECTION B-B

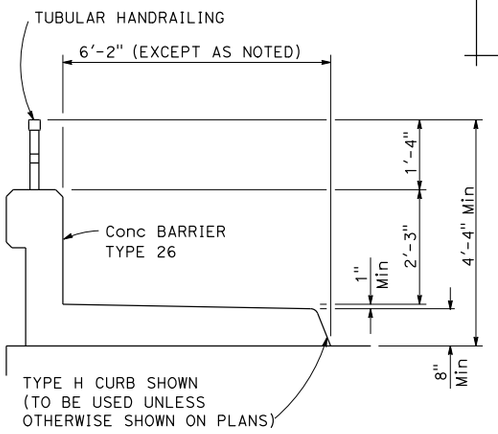

TYPICAL SECTION

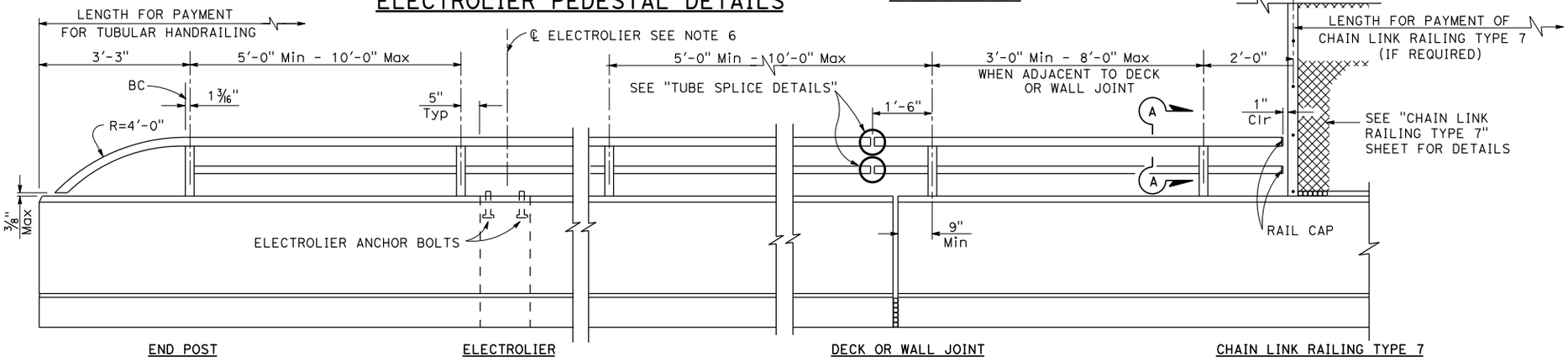

END POST | ELECTROLIER | DECK OR WALL JOINT | CHAIN LINK RAILING TYPE 7

RAIL CAP

TS 3" x 2" x 0.1875" similar

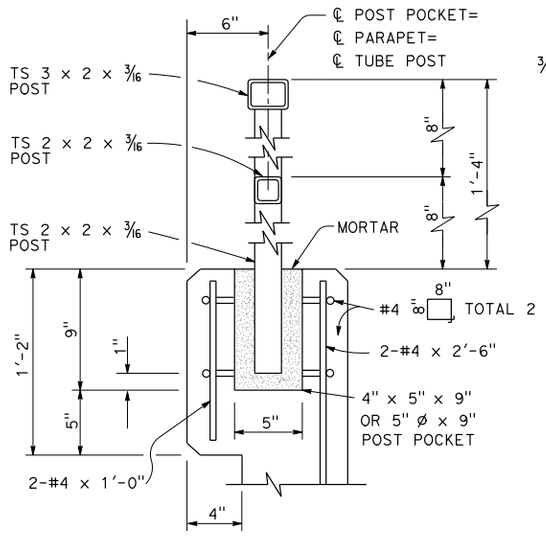

POST ANCHORAGE DETAILS

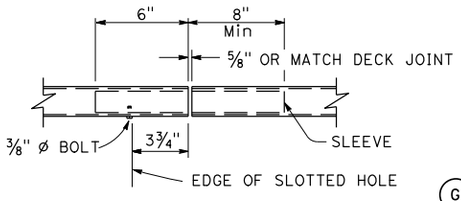

VIEW G-G

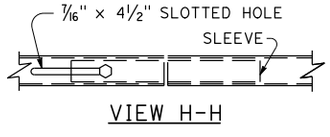

VIEW H-H

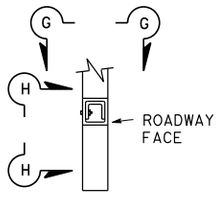

SECTION

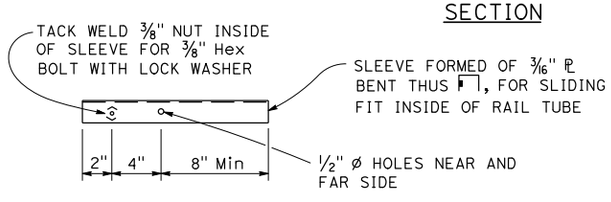

SLEEVE

TUBE SPLICE DETAILS

TS 3 x 2 x 3/16 similar

NOTES:

3/8" Nut tack welded to sleeve may be replaced by drilled and tapped hole in sleeve.

ELEVATION

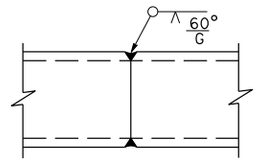

TUBE-WELDED SPLICE

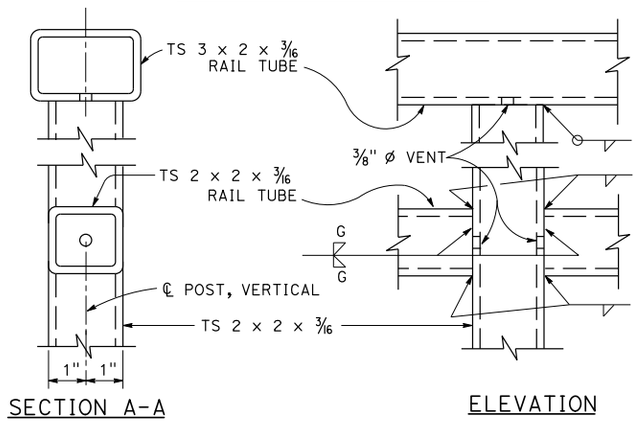

SECTION A-A | ELEVATION

RAIL CONNECTION DETAILS

NOTES:

1. Post shall be normal to railing.
2. Rail tubes shall be shop bent or fabricated to fit horizontal curve when radius is less than 950'.
3. Tube splices shall be located in the tubes spanning deck or wall joints. Increase joint width in tubes to match expansion joint width and increase sleeve length correspondingly.
4. Top rail tube shall be continuous over not less than two posts except a short post spacing is permitted near deck or wall joints, electroliers, or other rail discontinuities as noted.
5. For details and reinforcement not shown see Revised Standard Plan RSP B11-54.
6. For electrolier mounting details, see Revised Standard Plans RSP ES-6A and RSP ES-6B.

STATE OF CALIFORNIA
DEPARTMENT OF TRANSPORTATION

TUBULAR HANDRAILING

NO SCALE

RSP B11-51 DATED JULY 15, 2016 SUPERSEDES STANDARD PLAN B11-51 DATED OCTOBER 30, 2015 - PAGE 312 OF THE STANDARD PLANS BOOK DATED 2015.

REVISED STANDARD PLAN RSP B11-51

7-7-16

2015 REVISED STANDARD PLAN RSP B11-51

© 2017 California Department of Transportation
All Rights Reserved

Dist	COUNTY	ROUTE	POST MILES TOTAL PROJECT	SHEET No.	TOTAL SHEETS
04	SCL	101,237	45.2/45.8, 2.7/3.3	631	736

REGISTERED CIVIL ENGINEER

January 20, 2017
PLANS APPROVAL DATE

REGISTERED PROFESSIONAL ENGINEER
Tillat Satter
No. C42892
Exp. 3-31-18
CIVIL
STATE OF CALIFORNIA

THE STATE OF CALIFORNIA OR ITS OFFICERS OR AGENTS SHALL NOT BE RESPONSIBLE FOR THE ACCURACY OR COMPLETENESS OF SCANNED COPIES OF THIS PLAN SHEET.

TO ACCOMPANY PLANS DATED _____

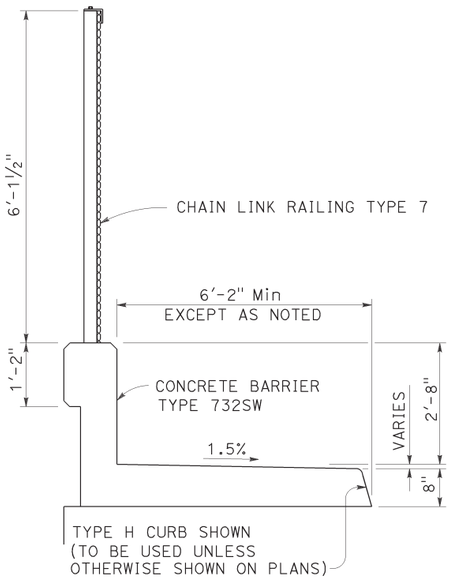

TYPICAL SECTION

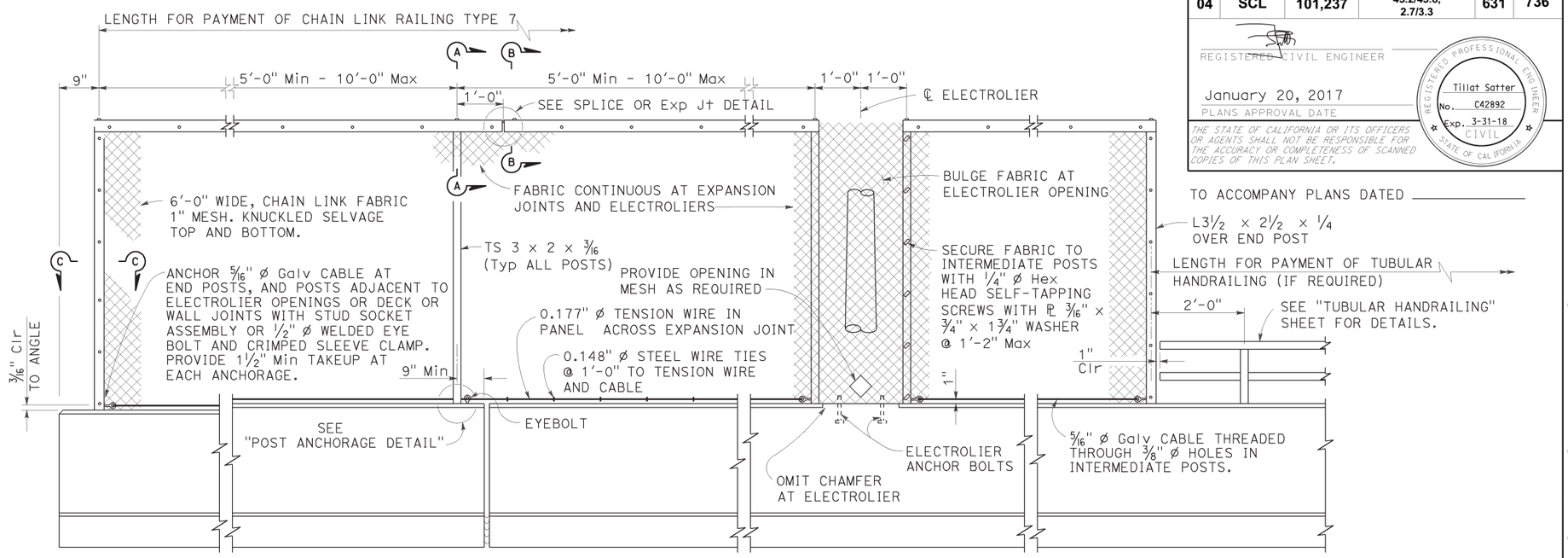

ELEVATION

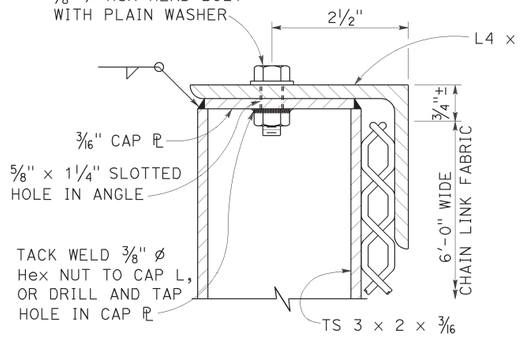

SECTION A-A

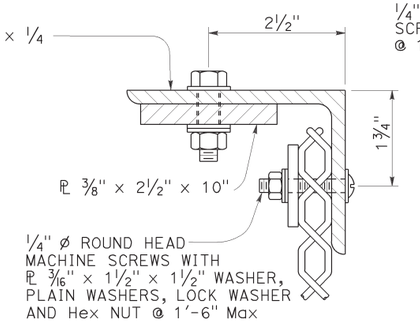

SECTION B-B

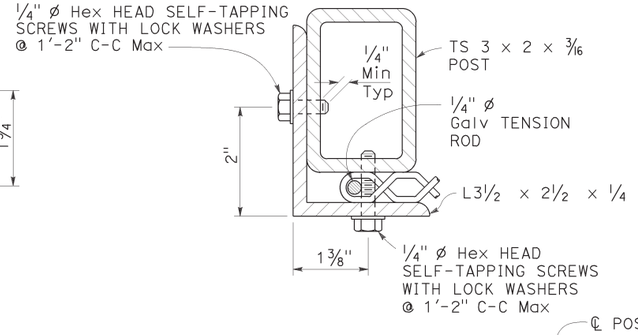

SECTION C-C

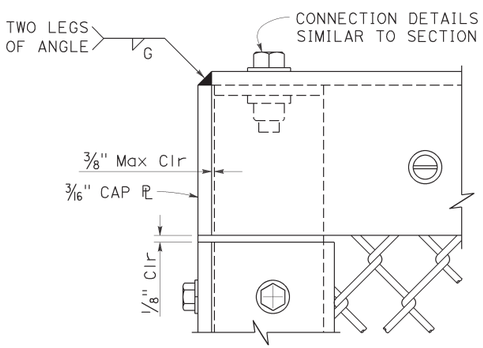

END POST ELEVATION

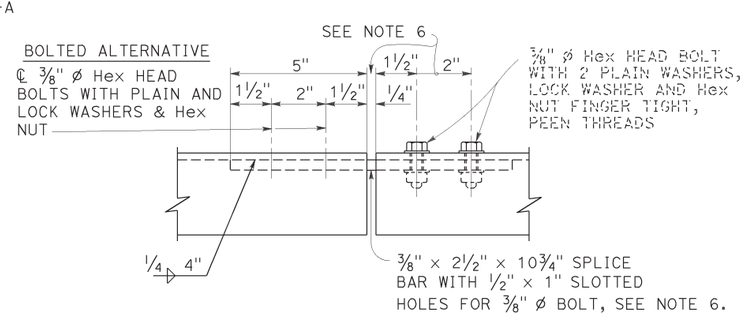

SPLICE OR EXPANSION JOINT DETAIL

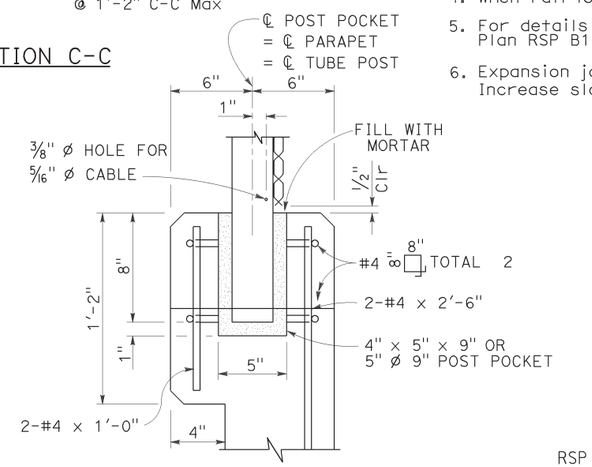

POST ANCHORAGE DETAIL

NOTES:

1. Posts shall be vertical.
2. Railing shall conform to horizontal and vertical alignment. When railing is placed on a curved horizontal alignment with radius of 148'-0" or less, thread the 5/16" ø cable through 3/8" ø welded eye rods embedded 4" into the top of the concrete parapet and equally spaced to limit the midordinate distance between the 5/16" ø cable and the curve to 1" maximum. Horizontal angle shall be bent to conform to horizontal alignment if radius is 148'-0" or less and may be on 10'-0" chords if radius is over 148'-0"
3. Horizontal angle shall be continuous over not less than two intermediate posts, except that a shorter length is permitted at expansion joints, electroliers and other rail discontinuities.
4. When rail is on slope, place fabric parallel to slope.
5. For details and reinforcement not shown see Revised Standatd Plan RSP B11-54.
6. Expansion joint same dimension as expansion joint in deck or wall. Increase slotted hole length and splice bar length correspondingly.

STATE OF CALIFORNIA
DEPARTMENT OF TRANSPORTATION

CHAIN LINK RAILING TYPE 7

NO SCALE

RSP B11-52 DATED JANUARY 20, 2017 SUPERSEDES RSP B11-52
DATED OCTOBER 30, 2015 - PAGE 313 OF THE STANDARD PLANS BOOK DATED 2015.

REVISED STANDARD PLAN RSP B11-52

2015 REVISED STANDARD PLAN RSP B11-52

11-22-16

© 2016 California Department of Transportation
All Rights Reserved

Dist	COUNTY	ROUTE	POST MILES TOTAL PROJECT	SHEET No.	TOTAL SHEETS
04	SCL	101.237	45.2/45.8, 2.7/3.3	632	736

REGISTERED CIVIL ENGINEER

July 15, 2016
PLANS APPROVAL DATE

REGISTERED PROFESSIONAL ENGINEER — Tillat Satter, No. C42892, Exp. 3-31-18, CIVIL, STATE OF CALIFORNIA

THE STATE OF CALIFORNIA OR ITS OFFICERS OR AGENTS SHALL NOT BE RESPONSIBLE FOR THE ACCURACY OR COMPLETENESS OF SCANNED COPIES OF THIS PLAN SHEET.

TO ACCOMPANY PLANS DATED _____

2015 REVISED STANDARD PLAN RSP B11-55

PLAN

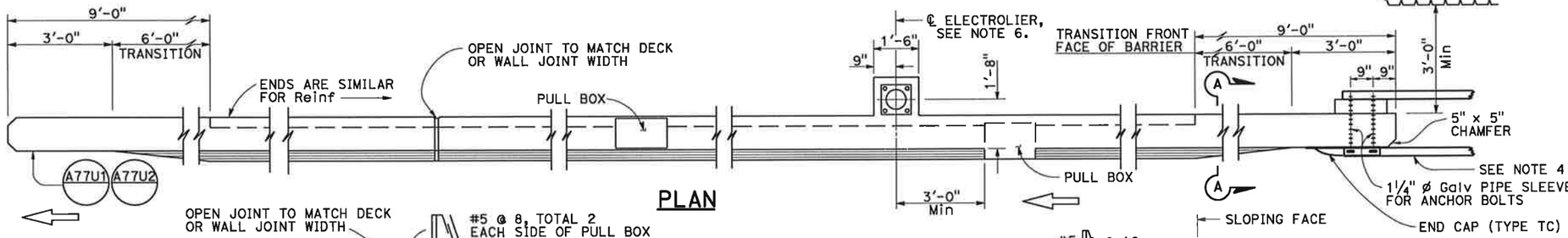

ELEVATION

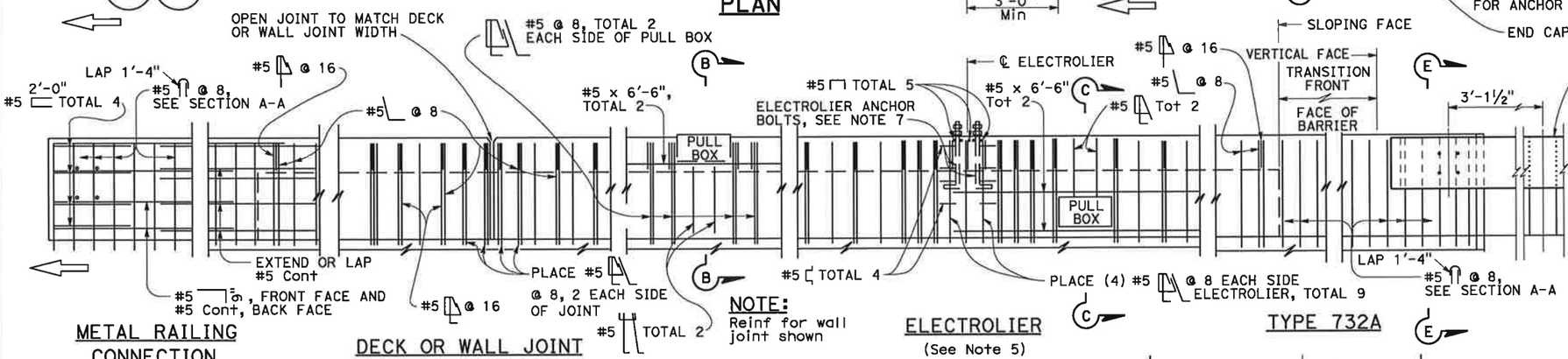

METAL RAILING CONNECTION

DECK OR WALL JOINT

NOTE: Reinf for wall joint shown

ELECTROLIER (See Note 5)

TYPE 732A

NOTES:

1. Walls are to be backfilled before barrier is placed.
2. Clearance to reinforcing steel in barrier to be 1", except as noted. Longitudinal reinforcement to stop at all expansion joints.
3. Dimensions may vary with roadway cross slope and with certain thickness of surfacing. See Project Plans.
4. For typical metal railing connection details not shown, see Standard Plans A77U1 and A77U2.
5. See Standard Plans ES-9A, ES-9B, Revised Standard Plans RSP ES-9C, RSP ES-9D and RSP ES-9E for electrical details. The maximum number of conduits in the barrier is limited to two 2" conduits along with one 3" conduit. When a 3" conduit is used, it is restricted to the base of the barrier.
6. For electrolier mounting details, See Revised Standard Plans RSP ES-6A and RSP ES-6B.
7. Minimum concrete edge distance, to the reinforcing shown, shall be maintained. Edge distance may be adjusted to accommodate increase in concrete cover for architectual treatment.

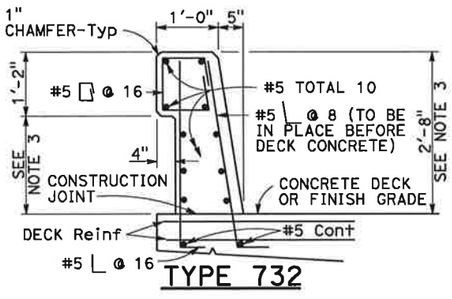

TYPE 732

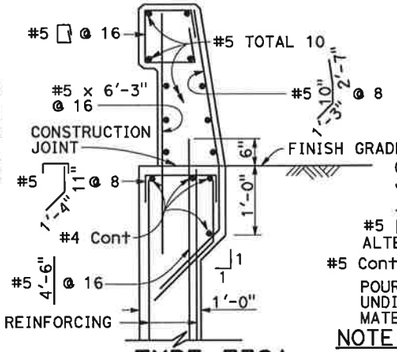

TYPE 732A

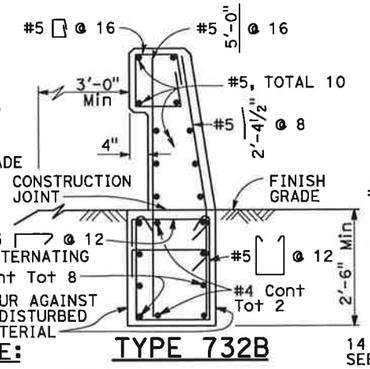

TYPE 732B

NOTE: Types 732A and 732B are similar to Type 732 except as noted.

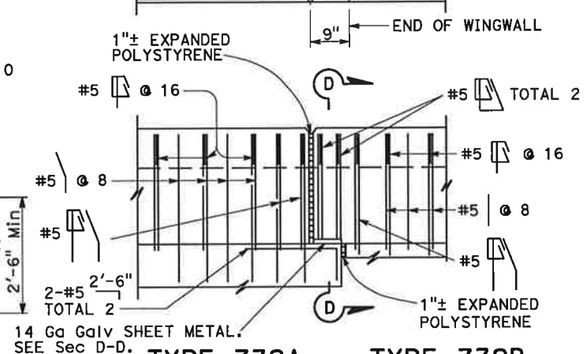

TYPE 732A

TYPE 732B

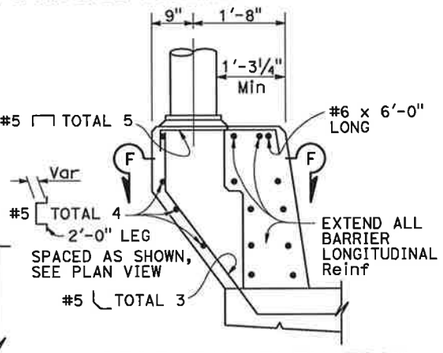

PEDESTAL ELEVATION

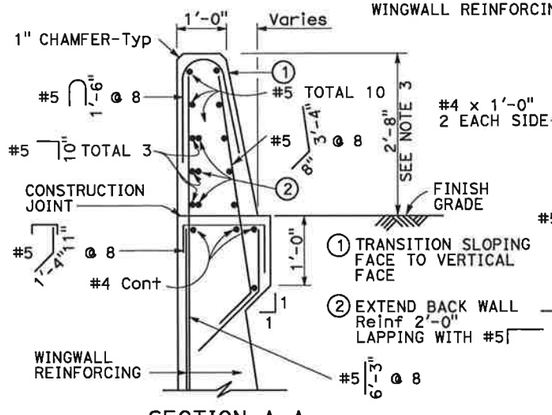

SECTION A-A

Details shown for barrier anchorage to Type 732A. Anchorage for barrier Types 732 and 732A are similar to their respective details.

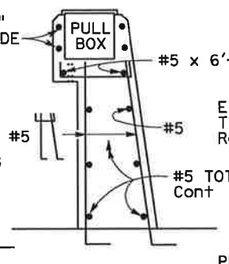

SECTION B-B

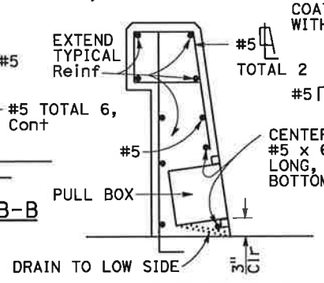

SECTION C-C
See Notes

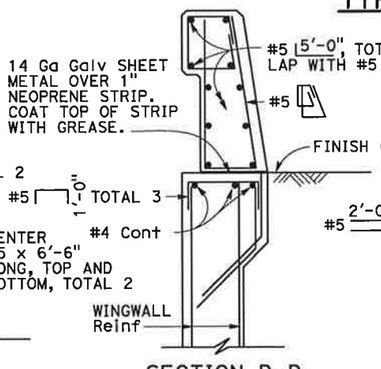

SECTION D-D

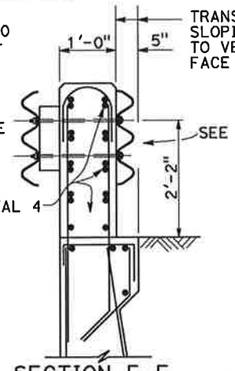

SECTION E-E
See Notes

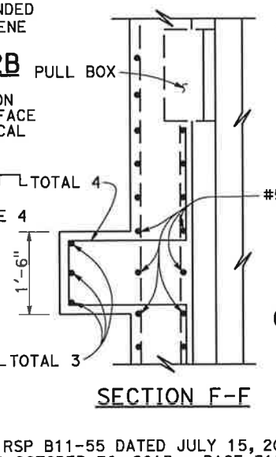

SECTION F-F

STATE OF CALIFORNIA
DEPARTMENT OF TRANSPORTATION

CONCRETE BARRIER TYPE 732

NO SCALE

RSP B11-55 DATED JULY 15, 2016 SUPERSEDES STANDARD PLAN B11-55 DATED OCTOBER 30, 2015 - PAGE 315 OF THE STANDARD PLANS BOOK DATED 2015.

REVISED STANDARD PLAN RSP B11-55

6-28-16

© 2016 California Department of Transportation
All Rights Reserved

Dist	COUNTY	ROUTE	POST MILES TOTAL PROJECT	SHEET No.	TOTAL SHEETS
04	SCL	101,237	45.2/45.8, 2.7/3.3	633	736

REGISTERED CIVIL ENGINEER

July 15, 2016
PLANS APPROVAL DATE

REGISTERED PROFESSIONAL ENGINEER — Tillat Satter — No. C42892 — Exp. 3-31-18 — CIVIL — STATE OF CALIFORNIA

THE STATE OF CALIFORNIA OR ITS OFFICERS OR AGENTS SHALL NOT BE RESPONSIBLE FOR THE ACCURACY OR COMPLETENESS OF SCANNED COPIES OF THIS PLAN SHEET.

TO ACCOMPANY PLANS DATED _____

2015 REVISED STANDARD PLAN RSP B11-56

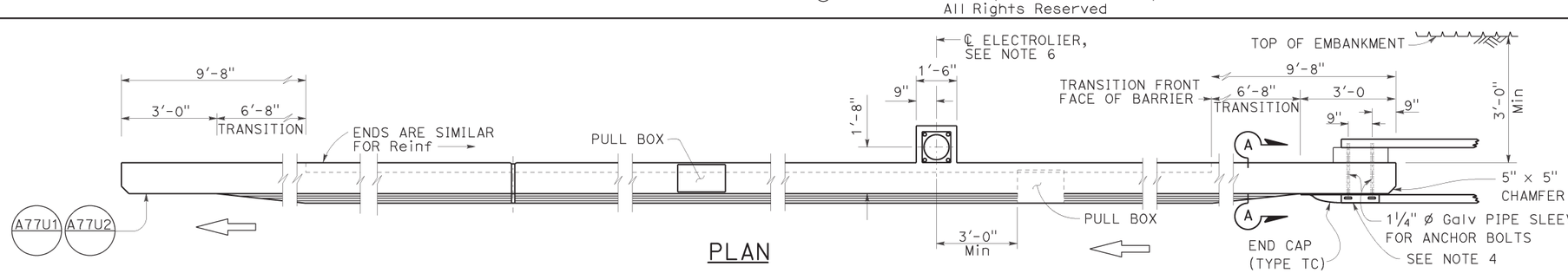

PLAN

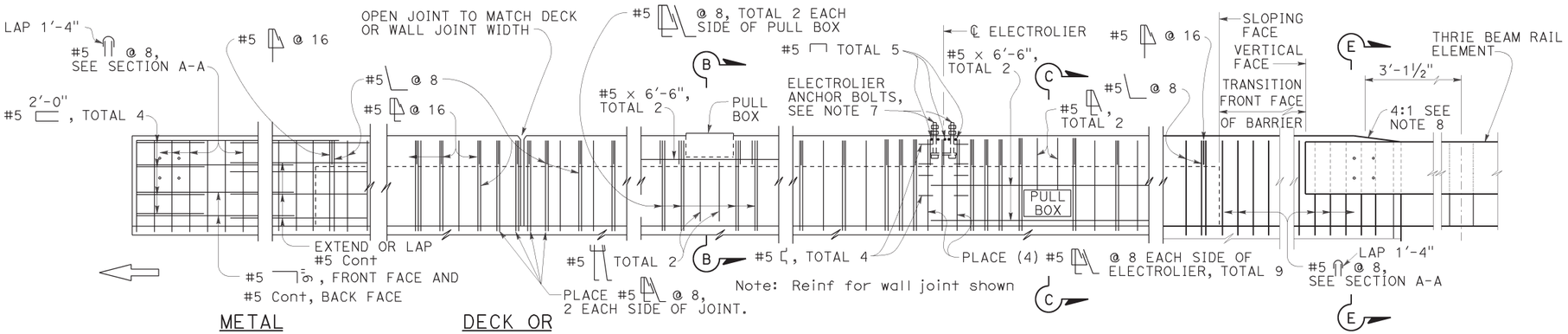

METAL RAILING CONNECTION

DECK OR WALL JOINT

ELECTROLIER
See Note F

TYPE 736A

ELEVATION

NOTES:

1. Walls are to be backfilled before barrier is placed.
2. Clearance to reinforcing steel in barrier to be 1", except as noted. Longitudinal reinforcement to stop at all expansion joints.
3. Dimensions may vary with roadway cross slope and with certain thickness of surfacing. See Project Plans.
4. For typical metal railing connection details not shown, see Standard Plans A77U1 and A77U2.
5. See Standard Plans ES-9A, ES-9B, Revised Standard Plans RSP ES-9C, RSP ES-9D and RSP ES-9E for electrical details. The maximum number of conduits in the barrier is limited to two 2" conduits along with one 3" conduit. When a 3" conduit is used, it is restricted to the base of the barrier.
6. For electrolier mounting details, See Revised Standard Plans RSP ES-6A and RSP ES-6B.
7. Minimum concrete edge distance, to the reinforcing shown, shall be maintained. Edge distance may be adjusted to accommodate increase in concrete cover for architectual treatment.
8. Taper the top of the end of the bridge railing at 4:1 to match the top elevation of the thrie beam rail element.

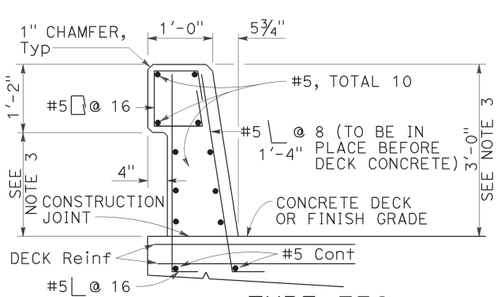

TYPE 736

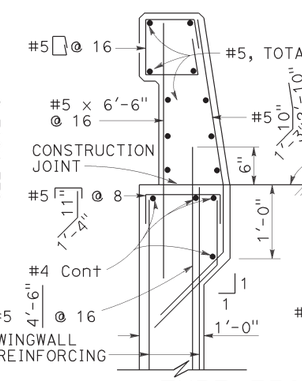

TYPE 736A

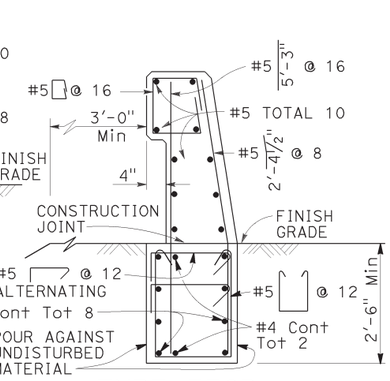

TYPE 736B

Note: Types 736A & 736B are similar to Type 736 except as noted

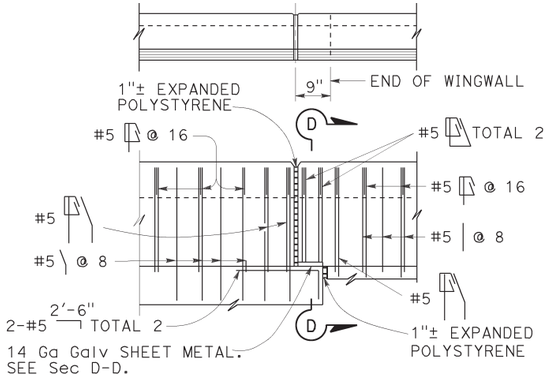

TYPE 736A TYPE 736B

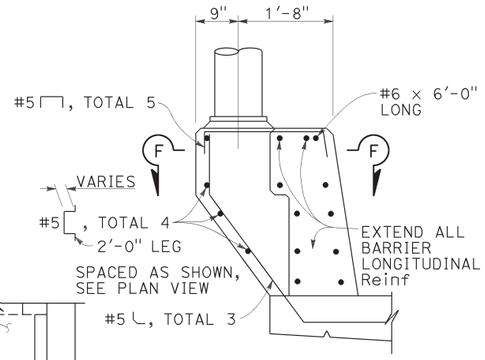

PEDESTAL ELEVATION

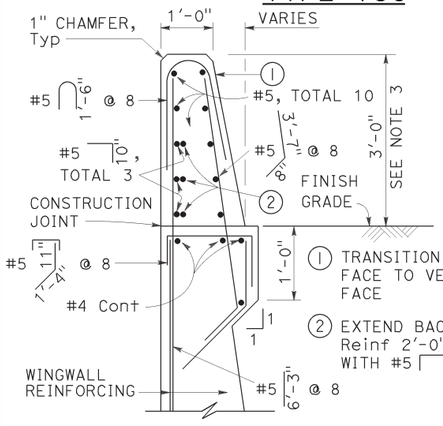

SECTION A-A

Details shown for barrier anchorage to Type 736A. Anchorgae for barrier Types 736 and 736B are similar to their respective details.

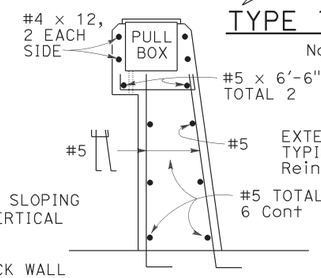

SECTION B-B

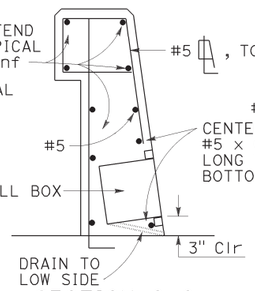

SECTION C-C

See Notes

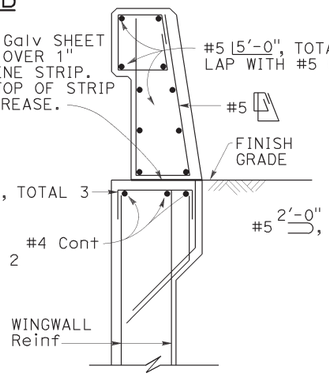

SECTION D-D

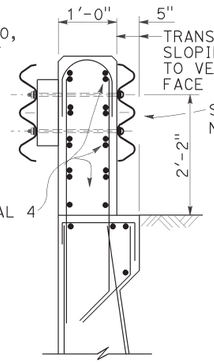

SECTION E-E

See Notes

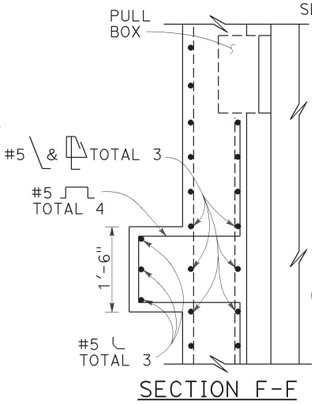

SECTION F-F

STATE OF CALIFORNIA
DEPARTMENT OF TRANSPORTATION

CONCRETE BARRIER TYPE 736

NO SCALE

RSP B11-56 DATED JULY 15, 2016 SUPERSEDES STANDARD PLAN B11-56 DATED OCTOBER 30, 2015 - PAGE 316 OF THE STANDARD PLANS BOOK DATED 2015.

REVISED STANDARD PLAN RSP B11-56

6-28-16

© 2017 California Department of Transportation
All Rights Reserved

Dist	COUNTY	ROUTE	POST MILES TOTAL PROJECT	SHEET No.	TOTAL SHEETS
04	SCL	101,237	45.2/45.8, 2.7/3.3	631	736

REGISTERED CIVIL ENGINEER

January 20, 2017
PLANS APPROVAL DATE

REGISTERED PROFESSIONAL ENGINEER — Tillat Satter — No. C42892 — Exp. 3-31-18 — CIVIL — STATE OF CALIFORNIA

THE STATE OF CALIFORNIA OR ITS OFFICERS OR AGENTS SHALL NOT BE RESPONSIBLE FOR THE ACCURACY OR COMPLETENESS OF SCANNED COPIES OF THIS PLAN SHEET.

TO ACCOMPANY PLANS DATED _____

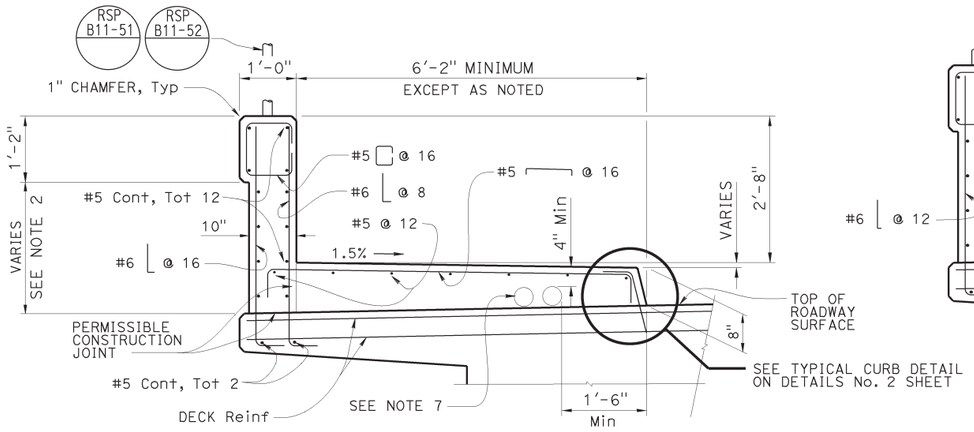

SECTION A-A

TYPICAL SECTION ON DECK

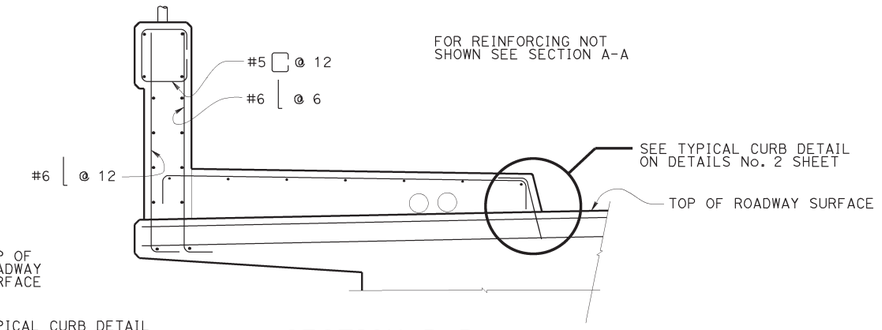

SECTION B-B

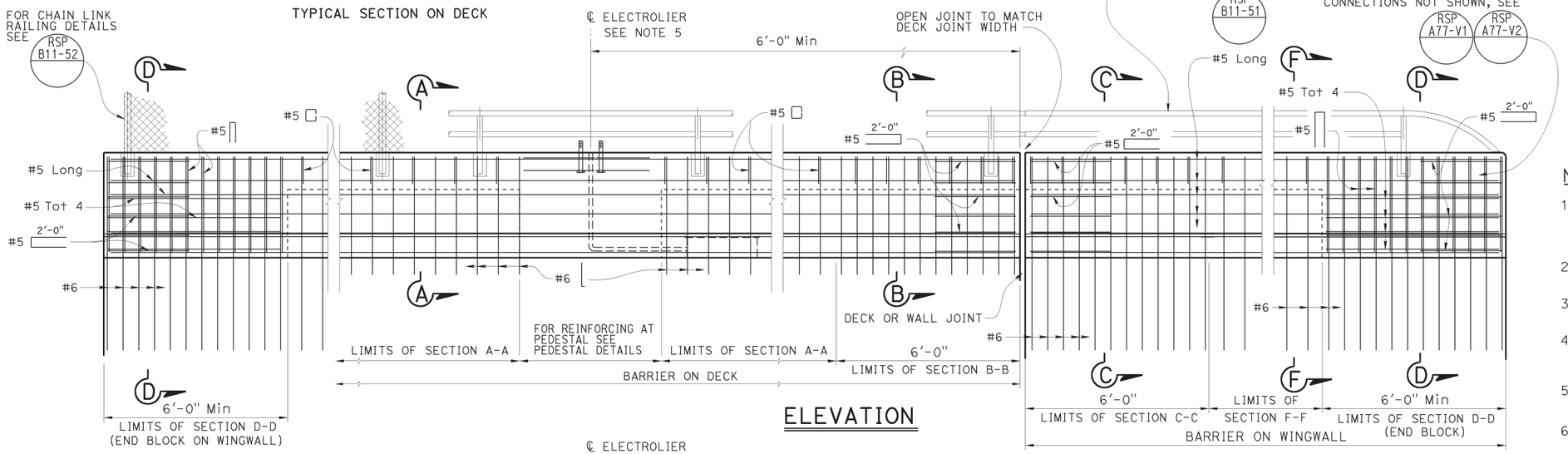

ELEVATION

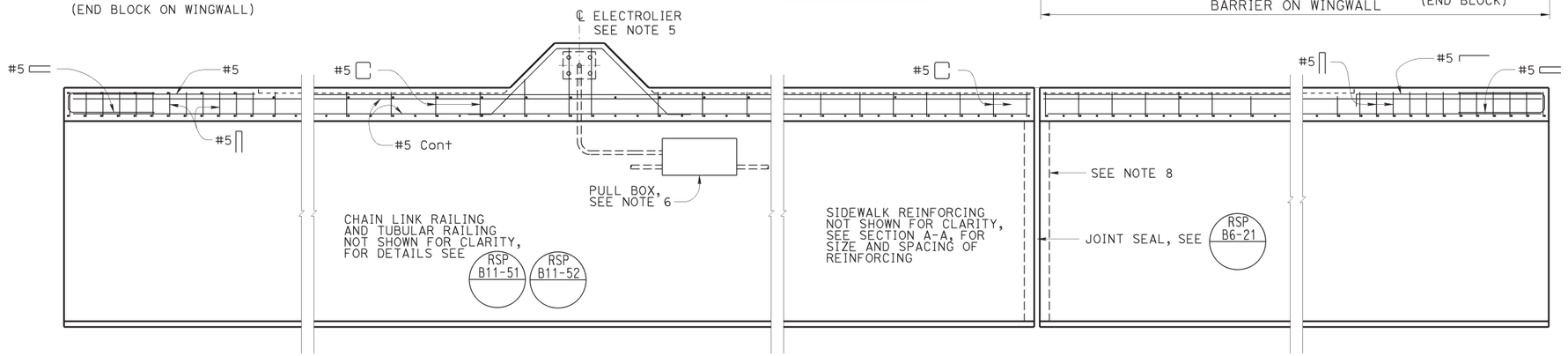

PLAN

NOTES:

1. This barrier is to be used only for posted speeds of 45 MPH or less. For speeds greater than 45 MPH, pedestrians must be protected by a separation traffic barrier.
2. Dimensions will vary with cross slope and surfacing thickness. See other sheets.
3. Walls must be backfilled before curb and parapet is placed.
4. Clearance to reinforcing steel in curb and railing is 2" except as noted. Longitudinal reinforcement to stop at all expansion joints.
5. See Project Plans for electrolier locations and pull box type.
6. For electrical details, see Revised Standard Plans RSP ES-9A, RSP ES-9B, RSP ES-9C, RSP ES-9D, and RSP ES-9E.
7. A minimum of two - 4" round openings for future utilities. A maximum six - 4" round openings for a 6'-2" sidewalk. One - 4" round opening can be added for each additional 1'-0" of sidewalk width. Utility opening must be a minimum of 6" from face of barrier parapet. Openings are to be sealed at ends and extended 8" minimum past end of sidewalk if not used. Duct forms are to be tied down. For exact number and placement of utility openings see other details.
8. See other details for "Joint Armor For Pedestrian Walkways" details.
9. Tubular hand railing and chain link railing continuous at pedestal.

STATE OF CALIFORNIA
DEPARTMENT OF TRANSPORTATION

CONCRETE BARRIER TYPE 732SW (SHEET 1 OF 2)

NO SCALE

RSP B11-58 DATED JANUARY 20, 2017 SUPPLEMENTS THE STANDARD PLANS BOOK DATED 2010.

REVISED STANDARD PLAN RSP B11-58

2010 REVISED STANDARD PLAN RSP B11-58

11-3-16

© 2017 California Department of Transportation
All Rights Reserved

NOTE:

RAILING AND FENCE NOT SHOWN FOR CLARITY

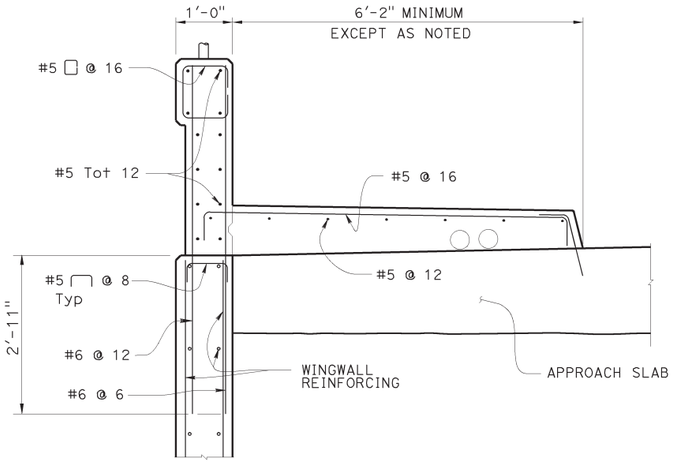

(WITH APPROACH SLAB)

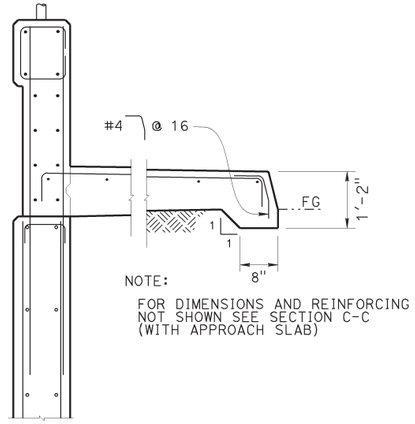

(WITHOUT APPROACH SLAB)

SECTION C-C

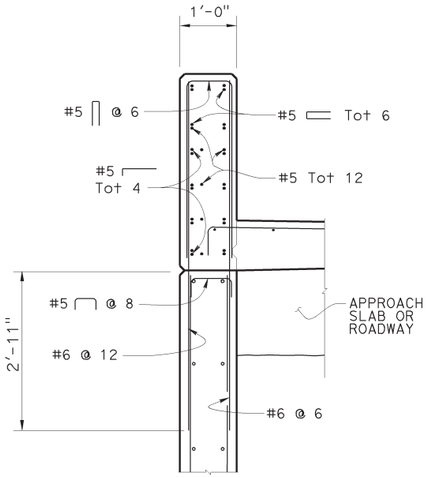

NOTE:

FOR SIDEWALK SEE SECTION C-C

SECTION D-D

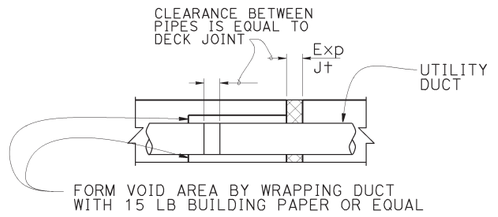

UTILITY DUCT EXPANSION JOINT

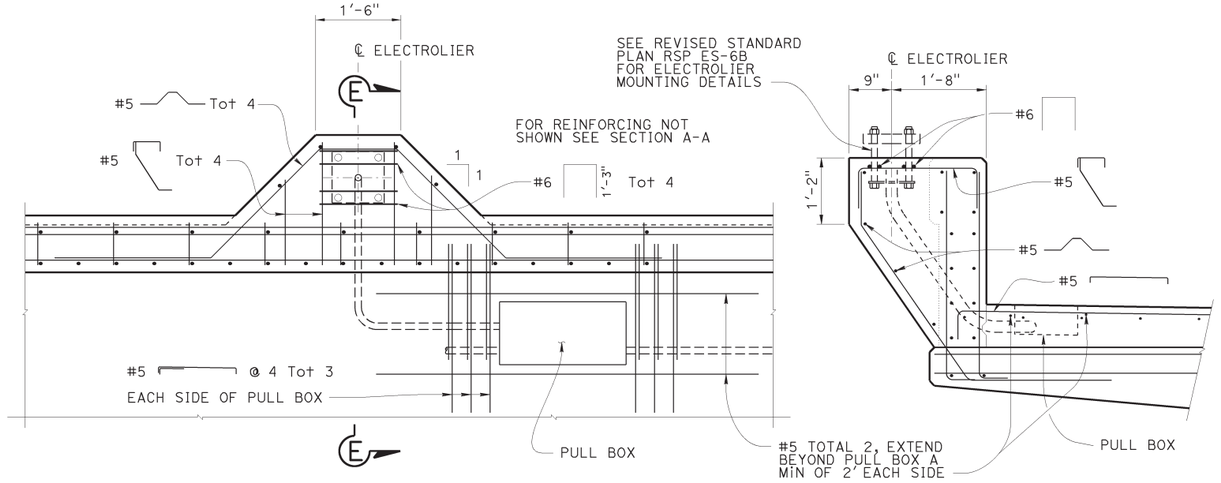

PEDESTAL PLAN

SECTION E-E

PEDESTAL DETAILS

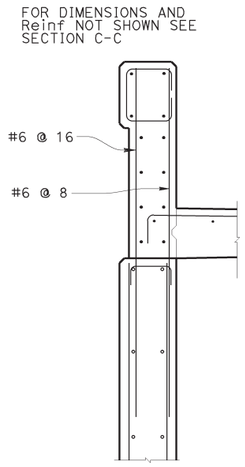

SECTION F-F

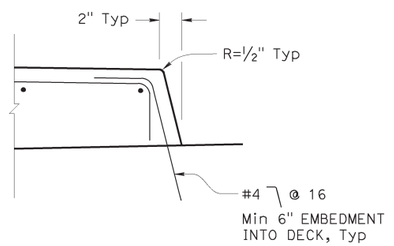

TYPICAL CURB DETAIL

Dist	COUNTY	ROUTE	POST MILES TOTAL PROJECT	SHEET No.	TOTAL SHEETS
04	SCL	101,237	45.2/45.8, 2.7/3.3	631	736

REGISTERED CIVIL ENGINEER

Tillat Satter
No. C42892
Exp. 3-31-18
CIVIL
REGISTERED PROFESSIONAL ENGINEER
STATE OF CALIFORNIA

January 20, 2017
PLANS APPROVAL DATE

THE STATE OF CALIFORNIA OR ITS OFFICERS OR AGENTS SHALL NOT BE RESPONSIBLE FOR THE ACCURACY OR COMPLETENESS OF SCANNED COPIES OF THIS PLAN SHEET.

TO ACCOMPANY PLANS DATED _____

STATE OF CALIFORNIA
DEPARTMENT OF TRANSPORTATION

CONCRETE BARRIER TYPE 732SW (SHEET 2 OF 2)

NO SCALE

RSP B11-59 DATED JANUARY 20, 2017 SUPPLEMENTS THE STANDARD PLANS BOOK DATED 2010.

REVISED STANDARD PLAN RSP B11-59

2010 REVISED STANDARD PLAN RSP B11-59

11-1-16

© 2018 California Department of Transportation
All Rights Reserved

Dist	COUNTY	ROUTE	POST MILES TOTAL PROJECT	SHEET No.	TOTAL SHEETS
04	SCL	101,237	45.2/45.8, 2.7/3.3	636	736

REGISTERED ELECTRICAL ENGINEER

Hamid Zolfaghari
No. E15636
Exp. 12-31-19
ELECTRICAL
REGISTERED PROFESSIONAL ENGINEER
STATE OF CALIFORNIA

April 20, 2018
PLANS APPROVAL DATE

THE STATE OF CALIFORNIA OR ITS OFFICERS OR AGENTS SHALL NOT BE RESPONSIBLE FOR THE ACCURACY OR COMPLETENESS OF SCANNED COPIES OF THIS PLAN SHEET.

TO ACCOMPANY PLANS DATED _____

LEGEND:

- AB ABANDON. IF APPLIED TO CONDUIT, REMOVE CONDUCTORS
- BC INSTALL PULL BOX IN EXISTING CONDUIT RUN
- BP PEDESTRIAN BARRICADE, TYPE AS INDICATED ON PLAN
- CB INSTALL CONDUIT INTO EXISTING PULL BOX
- CC CONNECT NEW AND EXISTING CONDUIT. REMOVE EXISTING CONDUCTORS AND INSTALL CONDUCTORS AS INDICATED
- CF CONDUIT TO REMAIN FOR FUTURE USE. REMOVE CONDUCTORS. INSTALL PULL TAPE
- DH DETECTOR HANDHOLE
- FA FOUNDATION TO BE ABANDONED
- IS INSTALL SIGN ON SIGNAL MAST ARM
- NS NO SLIP BASE ON STANDARD
- PEC PHOTOELECTRIC CONTROL
- PEU PHOTOELECTRIC UNIT
- RC EQUIPMENT OR MATERIAL TO BE REMOVED AND BECOME THE PROPERTY OF THE CONTRACTOR
- RE REMOVE ELECTROLIER, FUSES AND BALLAST. TAPE ENDS OF CONDUCTORS
- RL RELOCATE EQUIPMENT
- RR REMOVE AND REUSE EQUIPMENT
- RS REMOVE AND SALVAGE EQUIPMENT
- SC SPLICE NEW TO EXISTING CONDUCTORS
- SD SERVICE DISCONNECT
- TSP TELEPHONE SERVICE POINT

STANDARD ELECTROLIER

NEW	EXISTING	STANDARD TYPE
		15
		15D
		15 STRUCTURE
		15D STRUCTURE
		21
		21D
		21 STRUCTURE
		21D STRUCTURE
		30
		31
		32

MISCELLANEOUS ELECTROLIERS

NEW	EXISTING	
		LUMINAIRE ON WOOD POLE
		NON-STANDARD ELECTROLIER (SEE PROJECT LEGEND)
		CITY ELECTROLIER
		ELECTROLIER FOUNDATION (FUTURE INSTALLATION)

NOTES:

1. LED luminaires shall be Roadway 2 when installed on Type 21, 21D, 30, 31 and 32 Standards, unless otherwise specified. LED luminaires shall be Roadway 1 when installed on other type standards or poles, unless otherwise specified.

SOFFIT AND WALL-MOUNTED LUMINAIRES

- PENDANT SOFFIT LUMINAIRE, 70 W HPS UNLESS OTHERWISE SPECIFIED
- FLUSH-MOUNTED SOFFIT LUMINAIRE, 70 W HPS UNLESS OTHERWISE SPECIFIED
- WALL-MOUNTED LUMINAIRE, 70 W HPS UNLESS OTHERWISE SPECIFIED
- EXISTING SOFFIT OR WALL-MOUNTED LUMINAIRE TO REMAIN UNMODIFIED
- (M) EXISTING SOFFIT OR WALL-MOUNTED LUMINAIRE TO BE MODIFIED AS SPECIFIED

NOTE:

Arrow indicates "street side" of luminaire.

STATE OF CALIFORNIA
DEPARTMENT OF TRANSPORTATION

ELECTRICAL SYSTEMS (LEGEND)

NO SCALE

RSP ES-1A DATED APRIL 20, 2018 SUPERSEDES RSP ES-1A DATED JULY 21, 2017 AND STANDARD PLAN ES-1A DATED OCTOBER 30, 2015 - PAGE 418 OF THE STANDARD PLANS BOOK DATED 2015.

REVISED STANDARD PLAN RSP ES-1A

2015 REVISED STANDARD PLAN RSP ES-1A

11-15-17

© 2017 California Department of Transportation
All Rights Reserved

Dist	COUNTY	ROUTE	POST MILES TOTAL PROJECT	SHEET No.	TOTAL SHEETS
04	SCL	101,237	45.2/45.8, 2.7/3.3	637	736

REGISTERED ELECTRICAL ENGINEER

Hamid Zolfaghari
No. E15636
Exp. 12-31-17
ELECTRICAL
REGISTERED PROFESSIONAL ENGINEER
STATE OF CALIFORNIA

July 21, 2017
PLANS APPROVAL DATE

THE STATE OF CALIFORNIA OR ITS OFFICERS OR AGENTS SHALL NOT BE RESPONSIBLE FOR THE ACCURACY OR COMPLETENESS OF SCANNED COPIES OF THIS PLAN SHEET.

TO ACCOMPANY PLANS DATED _____

CONDUIT

NEW	EXISTING	
		LIGHTING CONDUIT, UNLESS OTHERWISE INDICATED OR NOTED
		TRAFFIC SIGNAL CONDUIT
C	c	COMMUNICATION CONDUIT
T	t	TELEPHONE CONDUIT
F	f	FIRE ALARM CONDUIT
FO	fo	FIBER OPTIC CONDUIT
		CONDUIT TERMINATION
R	r	CONDUIT RISER ATTACHED TO THE STRUCTURE OR SERVICE POLE

SERVICE EQUIPMENT

NEW	EXISTING	
OH	oh	OVERHEAD LINES
U	U	WOOD POLE, "U" INDICATES UTILITY OWNED
		POLE GUY WITH ANCHOR
		UTILITY TRANSFORMER - GROUND MOUNTED
III	III	SERVICE EQUIPMENT ENCLOSURE TYPE. DOOR INDICATES FRONT OF ENCLOSURE
T	T	TELEPHONE DEMARCATION CABINET

POLE-MOUNTED SERVICE DESIGNATION

TYPE H SERVICE, 28'-10" — TYPE OF INSTALLATION AND POLE HEIGHT ABOVE GRADE

FLASHING BEACON

NEW	EXISTING	
R	R	FLASHING BEACON (ONE VEHICLE SIGNAL HEAD WITH BACKPLATE AND VISOR) "R" INDICATES RED INDICATION, "Y" INDICATES YELLOW INDICATION
Y, Y	Y, Y	FLASHING BEACON WITH TYPE 15-FBS STANDARD AND A SIGN.
R R	R R	FLASHING BEACON WITH TYPES 9, 9A OR 9B SIGN UNLESS OTHERWISE SPECIFIED OR INDICATED

SIGNAL EQUIPMENT

NEW	EXISTING	
		PEDESTRIAN SIGNAL HEAD
		PUSH BUTTON ASSEMBLY POST
		PEDESTRIAN BARRICADE
		VEHICLE SIGNAL HEAD (WITH BACKPLATE)
		VEHICLE SIGNAL HEAD WITH ANGLE VISOR
PV	PV	MODIFICATIONS OF BASIC SYMBOL: "L" INDICATES ALL NON-ARROW SECTIONS LOUVERED "LG" INDICATES LOUVERED GREEN SECTION ONLY "PV" INDICATES ALL 12" SECTIONS PROGRAMMED VISIBILITY "8" INDICATES ALL 8" SECTIONS (ONLY WHEN SPECIFIED)
		VEHICLE SIGNAL HEAD CONSISTING OF RED, YELLOW AND GREEN LEFT ARROW SECTIONS
		VEHICLE SIGNAL HEAD CONSISTING OF RED AND YELLOW SECTIONS WITH AN UP GREEN ARROW SECTION
		VEHICLE SIGNAL HEAD (5 SECTION) CONSISTING OF RED, YELLOW AND GREEN SECTIONS WITH YELLOW AND GREEN RIGHT ARROW SECTIONS
		TYPE 15TS STANDARD WITH VEHICLE SIGNAL HEAD AND LUMINAIRE
		TYPE 21TS STANDARD WITH VEHICLE SIGNAL HEAD AND LUMINAIRE
		STANDARD WITH LUMINAIRE AND SIGNAL MAST ARMS AND ATTACHED VEHICLE SIGNAL HEADS
		TYPE 1 STANDARD WITH ATTACHED VEHICLE SIGNAL HEADS
		STANDARD WITH A SIGNAL MAST ARM, ATTACHED VEHICLE SIGNAL HEADS AND INTERNALLY ILLUMINATED STREET NAME SIGN
		CONTROLLER ASSEMBLY. DOOR INDICATES FRONT OF CABINET

SIGNAL EQUIPMENT Cont

NEW	EXISTING	
		GUARD POST
		TYPE 1 STANDARD WITH RAMP METERING SIGN
		OPTICAL DETECTOR FOR THE EMERGENCY VEHICLE DETECTION

NOTES:

1. All signal sections shall be 12" unless shown otherwise.
2. Signal heads shall be provided with backplates unless shown otherwise.

ILLUMINATED OVERHEAD SIGN

NEW	EXISTING	
		SINGLE POST, SINGLE ILLUMINATED SIGN, BALANCED BUTTERFLY
		SINGLE POST, DOUBLE ILLUMINATED SIGN, BALANCED BUTTERFLY
		SINGLE POST, SINGLE ILLUMINATED SIGN, FULL CANTILEVER
		DOUBLE POST, SINGLE ILLUMINATED SIGN
		SINGLE ILLUMINATED SIGN MOUNTED ON STRUCTURE
		DOUBLE POST, SINGLE ILLUMINATED SIGN WITH ELECTROLIER

STATE OF CALIFORNIA
DEPARTMENT OF TRANSPORTATION

ELECTRICAL SYSTEMS (LEGEND)

NO SCALE

RSP ES-1B DATED JULY 21, 2017 SUPERSEDES STANDARD PLAN ES-1B
DATED OCTOBER 30, 2015 - PAGE 419 OF THE STANDARD PLANS BOOK DATED 2015.

REVISED STANDARD PLAN RSP ES-1B

2015 REVISED STANDARD PLAN RSP ES-1B

5-23-17

© 2017 California Department of Transportation
All Rights Reserved

Dist	COUNTY	ROUTE	POST MILES TOTAL PROJECT	SHEET No.	TOTAL SHEETS
04	SCL	101,237	45.2/45.8, 2.7/3.3	638	736

H.R.Z
REGISTERED ELECTRICAL ENGINEER

Hamid Zolfaghari No. E15636 Exp.12-31-17 ELECTRICAL — REGISTERED PROFESSIONAL ENGINEER — STATE OF CALIFORNIA

July 21, 2017
PLANS APPROVAL DATE

THE STATE OF CALIFORNIA OR ITS OFFICERS OR AGENTS SHALL NOT BE RESPONSIBLE FOR THE ACCURACY OR COMPLETENESS OF SCANNED COPIES OF THIS PLAN SHEET.

TO ACCOMPANY PLANS DATED _____

EQUIPMENT IDENTIFICATION

ILLUMINATED SIGN IDENTIFICATION:

SIGN No. 12345 — SIGN EQUIPMENT IDENTIFICATION CHARACTERS - PLACE ON POST OR STRUCTURE

10 ISL SCL 1.0
- 10 — TRANSFORMER RATING (kVA)
- ISL — LIGHTING CONTROL TYPE
- 1.0 — NUMBER AND TYPE OF FIXTURES

} DO NOT PLACE ON STANDARD OR STRUCTURE

ELECTROLIER OR EQUIPMENT IDENTIFICATION:

L2745 - 15'-0"
- 15'-0" — MAST ARM LENGTH, IF SHOWN. DO NOT PLACE ON STANDARD OR STRUCTURE
- L2745 — EQUIPMENT IDENTIFICATION CHARACTERS - PLACE ON STANDARD OR STRUCTURE. EXISTING EQUIPMENT IDENTIFICATION CHARACTERS ARE SHOWN IN PARENTHESIS

CONDUIT AND CONDUCTOR IDENTIFICATION:

1½"C, 2#10, 15#14, 2 DLC, 12P#18
- 12P#18 — PAIR
- 2#10, 15#14, 2 DLC — NUMBER AND SIZE OF CONDUCTORS AND CABLES
- 1½"C — SIZE OF CONDUIT IN INCHES

PEDESTRIAN
- ø1, ø2, ø2P, etc. — TRAFFIC PHASE IDENTIFICATION FOR SIGNALS, DETECTORS AND PHASE DIAGRAMS
- [1] [2] [3] — LEGEND NUMBERS
- Ⓐ Ⓑ Ⓒ — EQUIPMENT, SIGNAL POLES, INSTALLATION OR ITEMS
- △1 △2 △3 — CONDUIT RUN NUMBERS

SIGNAL AND LIGHTING STANDARD (TYPICAL DESIGNATION):

19A - 3 - 100
- 100 — WIND VELOCITY = 100 mph
- 3 — CASE 3 ARM LOADING
- 19A — STANDARD TYPE
- STANDARD PLAN SHEET NUMBER
- DETAIL, NUMBER, SECTION, TYPE OR ELEVATION

MISCELLANEOUS EQUIPMENT

NEW	EXISTING	
CMS	cms	CHANGEABLE MESSAGE SIGN
		CLOSED CIRCUIT TELEVISION CAMERA
		HIGHWAY ADVISORY RADIO POLE AND ANTENNA
EMS	ems	LED EXTINGUISHABLE MESSAGE SIGN
M V	m v	DETECTION DEVICE M = MICROWAVE SENSOR V = VIDEO IMAGE SENSOR

WIRING DIAGRAM LEGEND

- EXTERNAL CONDUCTOR
- CONDUCTOR OR BUS
- TIE POINT
- CONTACTOR COIL
- CONTACTOR, NO CONTACT
- TERMINAL BLOCKS
- CONTACTOR, NC CONTACT
- ENCLOSURE BOND
- GROUNDING ELECTRODE
- CIRCUIT BREAKER
- RECEPTACLE

PULL BOXES

NEW	EXISTING	
		PULL BOX, No. 5 UNLESS OTHERWISE INDICATED OR NOTED
3	9A(21)	PULL BOX, ADDITIONAL DESIGNATIONS OR DESCRIPTIONS

3 No. 3½ PULL BOX
5 No. 5 PULL BOX
6 No. 6 PULL BOX
7 No. 7 PULL BOX (CEILING)
8 No. 8 PULL BOX
9 No. 9 PULL BOX (STRUCTURE)
9A No. 9A PULL BOX (STRUCTURE)

(C) COMMUNICATIONS PULL BOX
(E) PULL BOX WITH EXTENSION
(S) SPRINKLER CONTROL PULL BOX
(21) ANCHOR BOLTS AND CONDUIT FOR FUTURE INSTALLATION OF TYPE 21 STANDARD
(T) TRAFFIC PULL BOX
(TR) TAMPER-RESISTANT PULL BOX

VEHICLE DETECTOR DESIGNATION

5 J 9 U
- U — INPUT FILE (U = UPPER, L = LOWER)
- 9 — SLOT NUMBER IN INPUT FILE (1 TO 14)
- J — INPUT FILE (I OR J)
- 5 — PHASE (1 TO 8)

NEW	EXISTING	
		TYPE A LOOP DETECTOR. OUTLINE OF SAW CUT SHOWN
		TYPE B LOOP DETECTOR. OUTLINE OF SAW CUT SHOWN
		TYPE C LOOP DETECTOR. OUTLINE OF SAW CUT SHOWN
		TYPE D LOOP DETECTOR. OUTLINE OF SAW CUT SHOWN
		TYPE E LOOP DETECTOR. OUTLINE OF SAW CUT SHOWN
		TYPE Q LOOP DETECTOR. OUTLINE OF SAW CUT SHOWN
DH	dh	DETECTOR HANDHOLE
		MICROWAVE OR VIDEO DETECTION ZONE

STATE OF CALIFORNIA
DEPARTMENT OF TRANSPORTATION

ELECTRICAL SYSTEMS (LEGEND AND ABBREVIATIONS)

NO SCALE

RSP ES-1C DATED JULY 21, 2017 SUPERSEDES RSP ES-1C DATED APRIL 15, 2016 AND STANDARD PLAN ES-1C DATED OCTOBER 30, 2015 - PAGE 420 OF THE STANDARD PLANS BOOK DATED 2015.

REVISED STANDARD PLAN RSP ES-1C

2015 REVISED STANDARD PLAN RSP ES-1C

5-24-17

© 2017 California Department of Transportation
All Rights Reserved

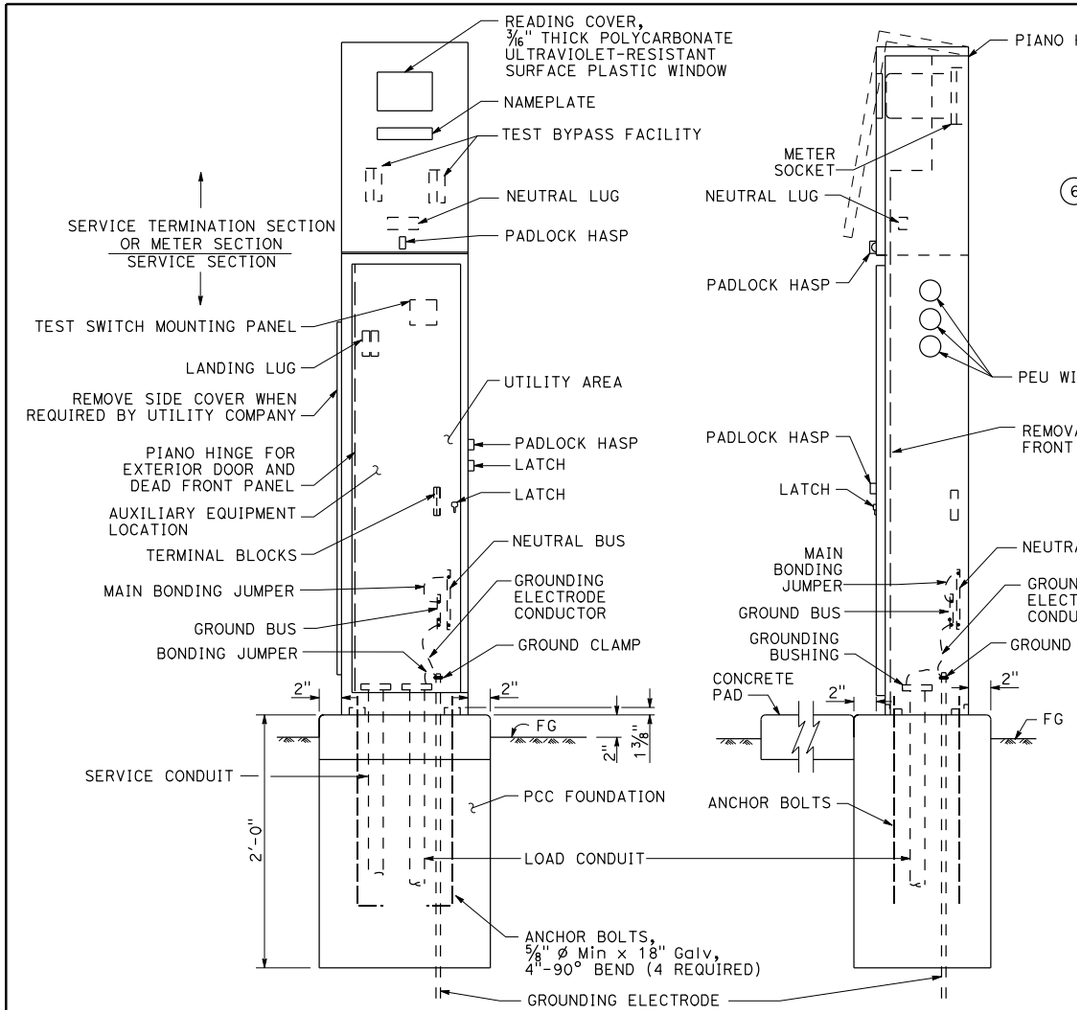

FRONT VIEW SIDE VIEW

TYPE III-AF SERVICE EQUIPMENT ENCLOSURE (TYPICAL)
DETAIL A

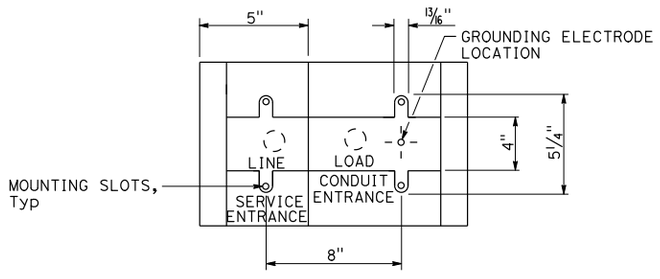

BASE FOR TYPE III-A SERVICE EQUIPMENT ENCLOSURE
DETAIL B

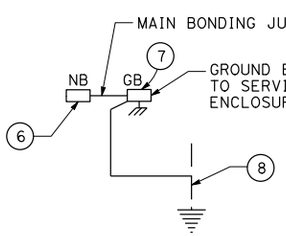

DETAIL D

TO ACCOMPANY PLANS DATED

Dist	COUNTY	ROUTE	POST MILES TOTAL PROJECT	SHEET No.	TOTAL SHEETS
04	SCL	101,237	45.2/45.8, 2.7/3.3	639	736

H.R.Z.
REGISTERED ELECTRICAL ENGINEER

Hamid Zolfaghari
No. E15636
Exp. 12-31-17
ELECTRICAL
REGISTERED PROFESSIONAL ENGINEER
STATE OF CALIFORNIA

July 21, 2017
PLANS APPROVAL DATE

THE STATE OF CALIFORNIA OR ITS OFFICERS OR AGENTS SHALL NOT BE RESPONSIBLE FOR THE ACCURACY OR COMPLETENESS OF SCANNED COPIES OF THIS PLAN SHEET.

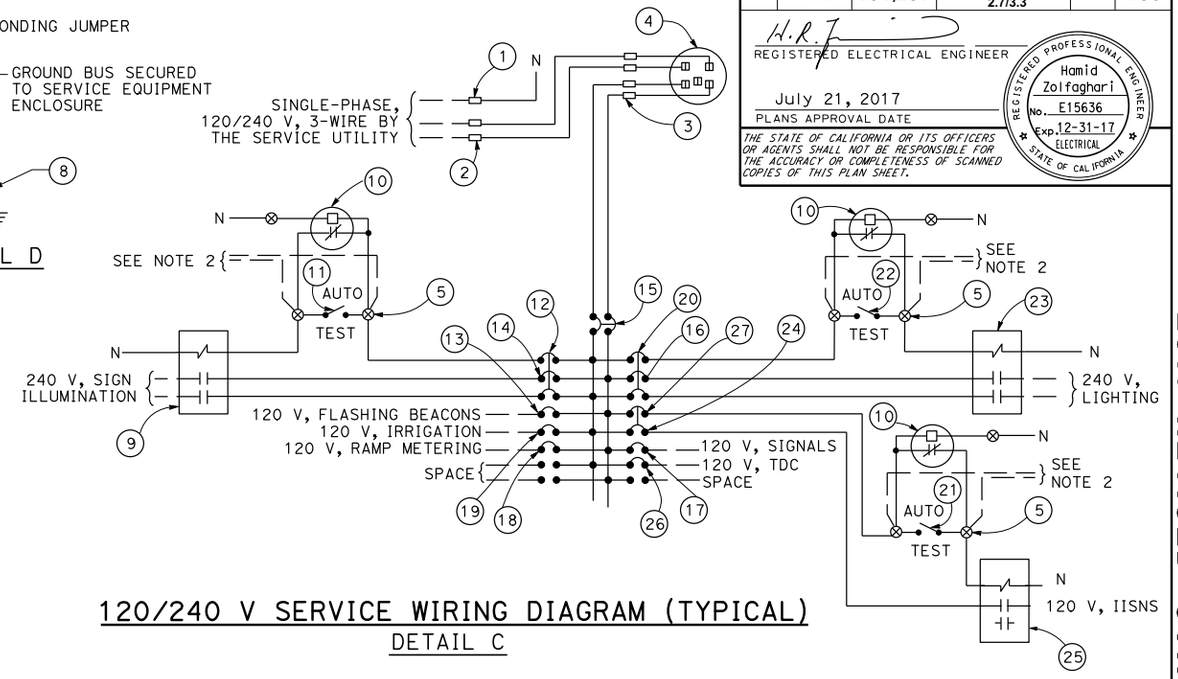

120/240 V SERVICE WIRING DIAGRAM (TYPICAL)
DETAIL C

TYPE III-A SERVICE EQUIPMENT ENCLOSURE LEGEND (120/240 V)

ITEM	COMPONENT	NAMEPLATE DESCRIPTION	ITEM	COMPONENT	NAMEPLATE DESCRIPTION
(1)	NEUTRAL LUG		(14)	30 A, 240 V, 2P, CB	SIGN ILLUMINATION
(2)	LANDING LUG		(15)	100 A, 240 V, 2P, CB	MAIN BREAKER
(3)	TEST BYPASS FACILITY		(16)	30 A, 240 V, 2P, CB	LIGHTING
(4)	METER SOCKET AND SUPPORT		(17)	50 A, 120 V, 1P, CB	SIGNALS
(5)	TERMINAL BLOCKS		(18)	30 A, 120 V, 1P, CB	RAMP METERING
(6)	NEUTRAL BUS		(19)	20 A, 120 V, 1P, CB	IRRIGATION
(7)	GROUND BUS		(20)	15 A, 120 V, 1P, CB	LIGHTING CONTROL
(8)	GROUNDING ELECTRODE		(21)	15 A, 1P, TEST SWITCH	IISNS TEST SWITCH
(9)	30 A, 2P, NO CONTACTOR	SIGN ILLUMINATION	(22)	15 A, 1P, TEST SWITCH	LIGHTING TEST SWITCH
(10)	PHOTOELECTRIC UNIT (NOTE 4)	PEU	(23)	60 A, 2P, NO CONTACTOR	LIGHTING
(11)	15 A, 1P, TEST SWITCH	SIGN ILLUMINATION TEST SWITCH	(24)	15 A, 120 V, 1P, CB	IISNS
(12)	15 A, 120 V, 1P, CB	SIGN ILLUMINATION CONTROL	(25)	30 A, 2P, NO CONTACTOR	IISNS
(13)	15 A, 120 V, 1P, CB	FLASHING BEACON	(26)	20 A, 120 V, 1P, CB	TELEPHONE DEMARCATION CABINET
			(27)	15 A, 120 V, 1P, CB	IISNS CONTROL

NOTES:

1. Unless otherwise indicated on the plans, service equipment items shall be provided for each service equipment enclosure as shown.
2. Connect to remote test switch mounted on lighting standards, sign post or structure when required.
3. Items (1) and (6) shall be isolated from the service equipment enclosure.
4. Type V photoelectric control shall be used unless otherwise indicated on the plans.
5. Item (12), (20) and (27) shall be ganged operated CB.

STATE OF CALIFORNIA
DEPARTMENT OF TRANSPORTATION

ELECTRICAL SYSTEMS (SERVICE EQUIPMENT ENCLOSURE AND TYPICAL WIRING DIAGRAM, TYPE III-A SERIES)

NO SCALE

RSP ES-2D DATED JULY 21, 2017 SUPERSEDES STANDARD PLAN ES-2D
DATED OCTOBER 30, 2015 - PAGE 424 OF THE STANDARD PLANS BOOK DATED 2015.

REVISED STANDARD PLAN RSP ES-2D

2015 REVISED STANDARD PLAN RSP ES-2D

4-25-17

© 2016 California Department of Transportation
All Rights Reserved

NOTES:

1. Controller units, plug-mounted equipment, shelf-mounted equipment and wall-mounted equipment shall be located to permit safe and easy removal or replacement without removing any other piece of equipment.
2. Cabinet fan may be installed at an alternate location near the top of the cabinet when approved by the Engineer.
3. Where telephone interconnect is required, a minimum of 5" clear vertical space shall be provided inside the cabinet for the equipment.
4. Telephone interconnect conductors shall be enclosed in a ¾"C or larger conduit through the foundation. Type 4 conduit shall be used to separate telephone and power conductors in cabinets.

Dist	COUNTY	ROUTE	POST MILES TOTAL PROJECT	SHEET No.	TOTAL SHEETS
04	SCL	101,237	45.2/45.8, 2.7/3.3	640	736

Theresa Gabriel
REGISTERED ELECTRICAL ENGINEER

Theresa Aziz Gabriel No. E15129 Exp. 6-30-16 ELECTRICAL — REGISTERED PROFESSIONAL ENGINEER — STATE OF CALIFORNIA

April 15, 2016
PLANS APPROVAL DATE

THE STATE OF CALIFORNIA OR ITS OFFICERS OR AGENTS SHALL NOT BE RESPONSIBLE FOR THE ACCURACY OR COMPLETENESS OF SCANNED COPIES OF THIS PLAN SHEET.

TO ACCOMPANY PLANS DATED _____

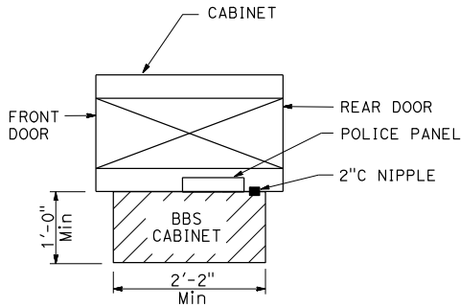

TOP VIEW

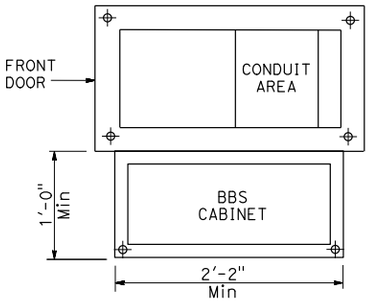

BASE PLAN FOR BBS MOUNTED TO THE MODEL 332L CABINET

(FOR DIMENSIONS AND DETAILS NOT SHOWN, SEE CABINET HOUSING DETAILS OF THE TRANSPORTATION ELECTRICAL EQUIPMENT SPECIFICATION (TEES))

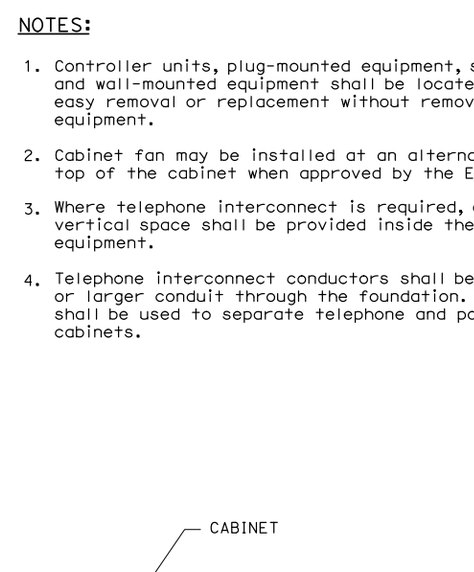

SIDE VIEW

BBS CABINET MOUNTED TO THE MODEL 332L CABINET

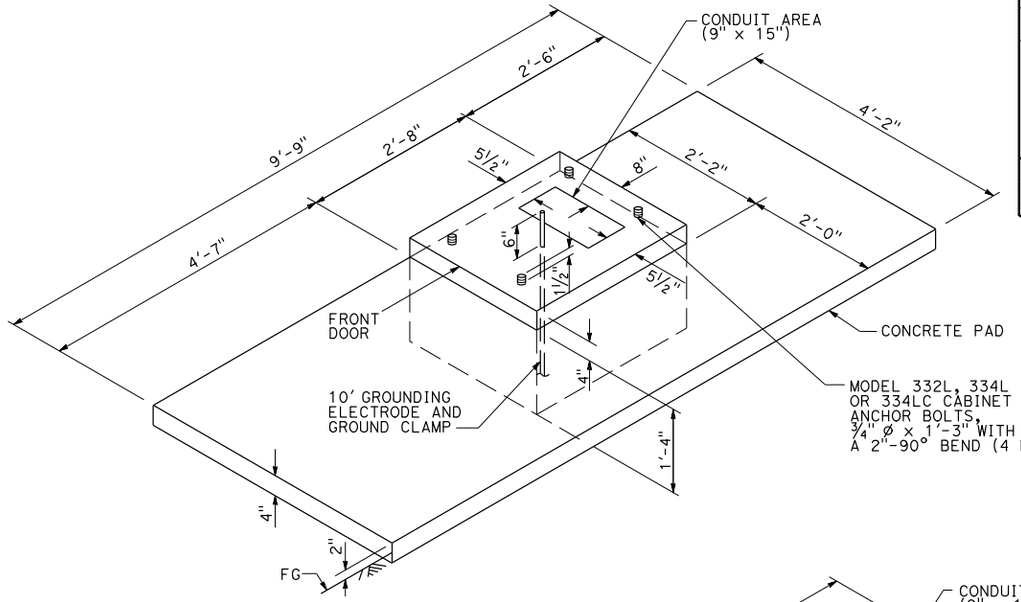

FOUNDATION AND PAD DETAIL

Model 332L, 334L and 334LC

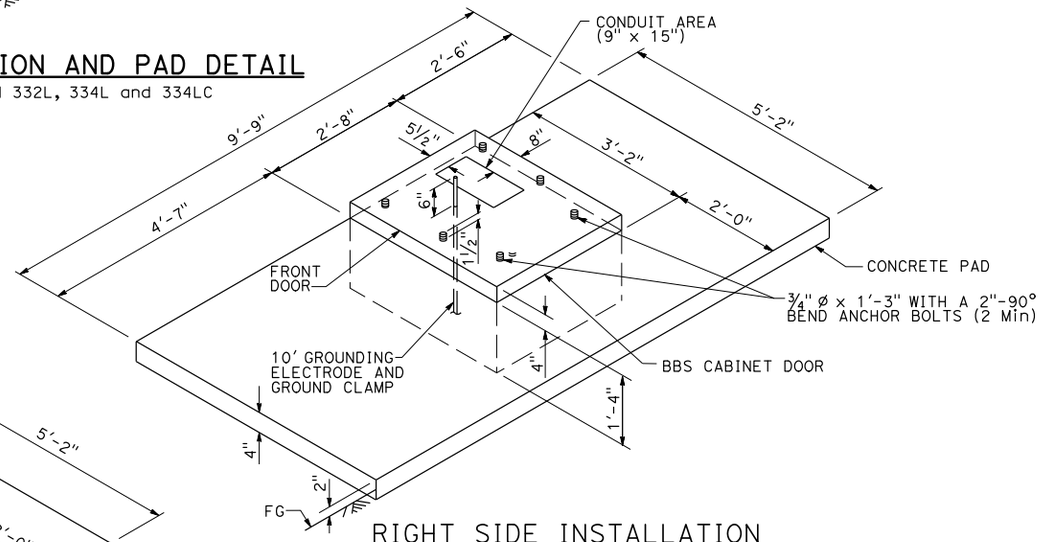

RIGHT SIDE INSTALLATION
DETAIL B

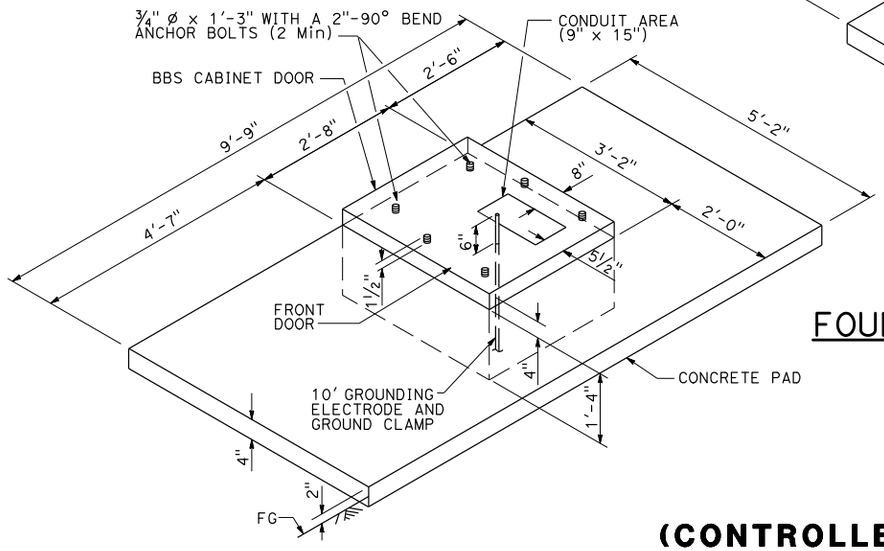

LEFT SIDE INSTALLATION
DETAIL A

MODIFIED MODEL 332L CABINET FOUNDATION DETAIL FOR BATTERY BACKUP SYSTEM

STATE OF CALIFORNIA
DEPARTMENT OF TRANSPORTATION

ELECTRICAL SYSTEMS (CONTROLLER CABINET FOUNDATION AND PAD DETAILS)

NO SCALE

RSP ES-3C DATED APRIL 15, 2016 SUPERSEDES STANDARD PLAN ES-3C DATED OCTOBER 30, 2015 - PAGE 430 OF THE STANDARD PLANS BOOK DATED 2015.

REVISED STANDARD PLAN RSP ES-3C

2015 REVISED STANDARD PLAN RSP ES-3C

1-12-16

© 2017 California Department of Transportation
All Rights Reserved

Dist	COUNTY	ROUTE	POST MILES TOTAL PROJECT	SHEET No.	TOTAL SHEETS
04	SCL	101,237	45.2/45.8, 2.7/3.3	641	736

REGISTERED ELECTRICAL ENGINEER

Hamid Zolfaghari
No. E15636
Exp. 12-31-17
ELECTRICAL
REGISTERED PROFESSIONAL ENGINEER
STATE OF CALIFORNIA

July 21, 2017
PLANS APPROVAL DATE

THE STATE OF CALIFORNIA OR ITS OFFICERS OR AGENTS SHALL NOT BE RESPONSIBLE FOR THE ACCURACY OR COMPLETENESS OF SCANNED COPIES OF THIS PLAN SHEET.

TO ACCOMPANY PLANS DATED _____

VISORS

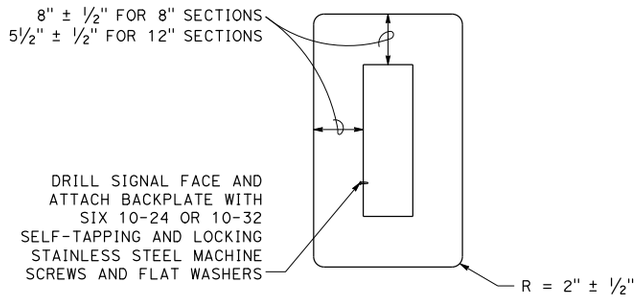

8" AND 12" SECTIONS

BACKPLATE

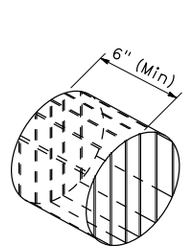

ISOMETRIC VIEW

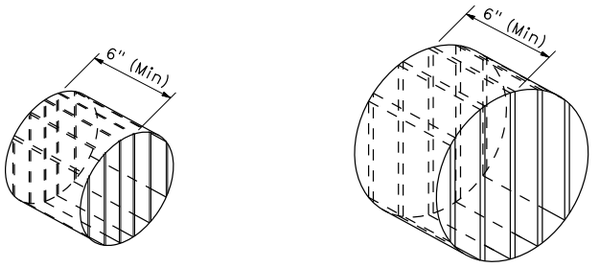

ISOMETRIC VIEW

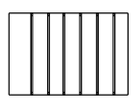

SECTION A-A

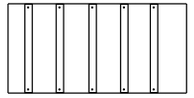

SECTION B-B

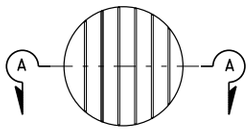

8" DIAMETER FRONT VIEW

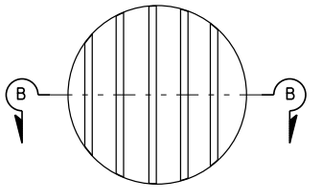

12" DIAMETER FRONT VIEW

DIRECTIONAL LOUVER

Directional louvers shall be oriented and secured in place with one plated brass machine screw and nut.

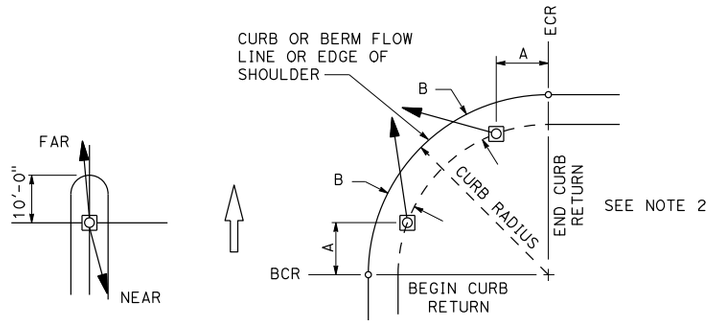

NOTES:

1. Typical signal pole placement unless dimensioned on plans.
2. For A and B dimensions, see Pole Schedule.

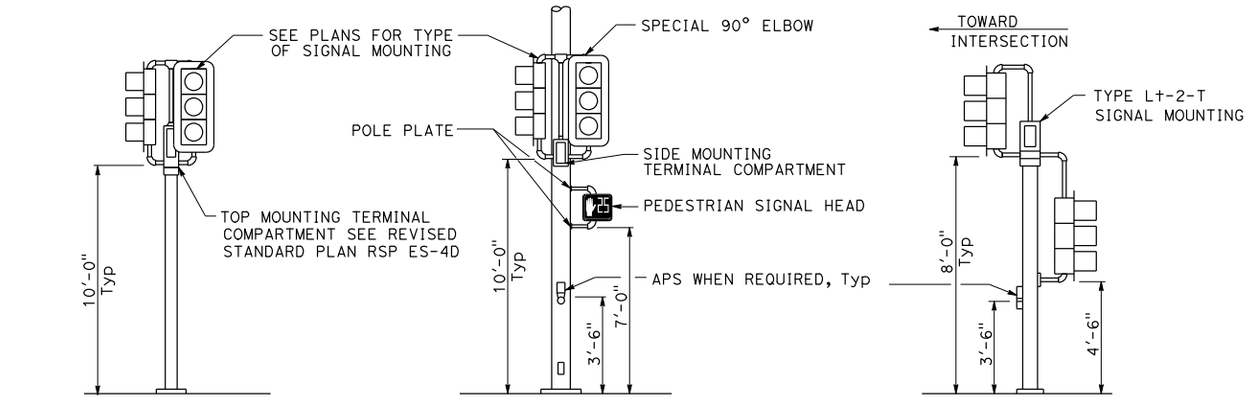

TOP MOUNTED SIGNALS (TV)

Type 1-A, 1-B, 1-C and 1-D standard as indicated on the plans

SIDE MOUNTED SIGNALS (SV AND SP)

Normally used on standards with luminaire or signal mast arm

LEFT TURN LANE SIGNAL

Type 1-A, 1-B, 1-C and 1-D standard as indicated on plans

TYPICAL SIGNAL HEAD INSTALLATIONS

SIGNAL STANDARD PLACEMENT DIMENSIONS AND EQUIPMENT LOCATIONS

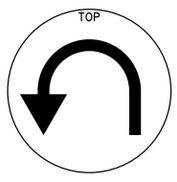

U-TURN

BICYCLE

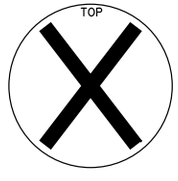

LANE CONTROL

LANE CONTROL

SIGNAL FACES

STATE OF CALIFORNIA
DEPARTMENT OF TRANSPORTATION

ELECTRICAL SYSTEMS (SIGNAL HEADS AND MOUNTINGS)

NO SCALE

RSP ES-4C DATED JULY 21, 2017 SUPERSEDES STANDARD PLAN ES-4C DATED OCTOBER 30, 2015 - PAGE 442 OF THE STANDARD PLANS BOOK DATED 2015.

REVISED STANDARD PLAN RSP ES-4C

2015 REVISED STANDARD PLAN RSP ES-4C

4-7-17

© 2017 California Department of Transportation
All Rights Reserved

Dist	COUNTY	ROUTE	POST MILES TOTAL PROJECT	SHEET No.	TOTAL SHEETS
04	SCL	101,237	45.2/45.8, 2.7/3.3	642	736

REGISTERED ELECTRICAL ENGINEER

Hamid Zolfaghari
No. E15636
Exp. 12-31-17
ELECTRICAL
REGISTERED PROFESSIONAL ENGINEER
STATE OF CALIFORNIA

July 21, 2017
PLANS APPROVAL DATE

THE STATE OF CALIFORNIA OR ITS OFFICERS OR AGENTS SHALL NOT BE RESPONSIBLE FOR THE ACCURACY OR COMPLETENESS OF SCANNED COPIES OF THIS PLAN SHEET.

TO ACCOMPANY PLANS DATED _____

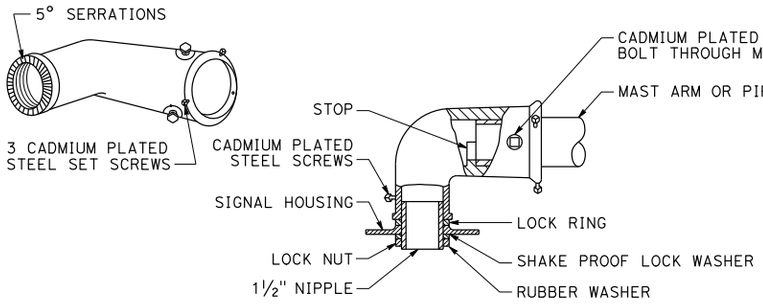

TYPE MAT
MAST ARM MOUNTING
For 2 NPS pipe, see Note 1.

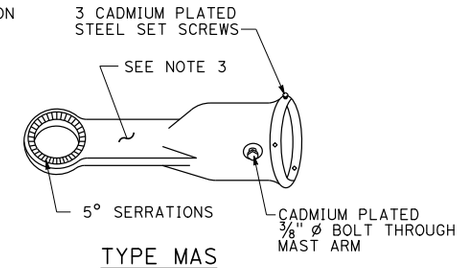

TYPE MAS
MAST ARM MOUNTING
For 2 NPS pipe, see Note 1.

SIGNAL SLIP FITTERS

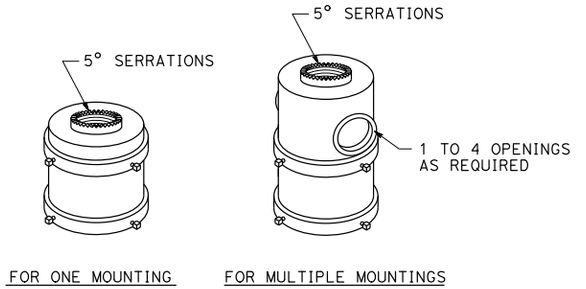

TOP MOUNTINGS
For 4 NPS pipe, see Note 2.

NOTES:

1. After mast arm signal has been plumbed and secured, drill 1/16" hole through mast arm tenon in line with slip fitter hole. Place a cadmium plated 3/8" ø galvanized bolt with washer under bolt head through hole and secure with washer, nut, and locknut. Seal openings between mast arm mountings and mast arm with mastic.
2. Threaded top mounted slip fitter openings shall be 1½ NPS. Serrations in fittings shall match those on bottom of signal heads or in lock ring. Top opening shall be offset when backplate is used.
3. Wireway shall have a cross section area of 0.95 square inch minimum. Minimum width of ½".

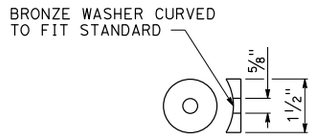

DETAIL C

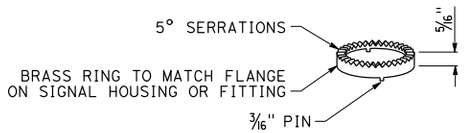

LOCK RING
Use where locking ring is not integral With signal housing or fitting.

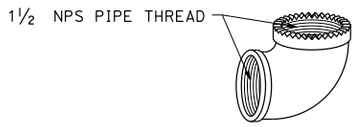

SPECIAL 90° ELBOW
One for each signal head, except those With special slip fitter mounting

MISCELLANEOUS MOUNTING HARDWARE

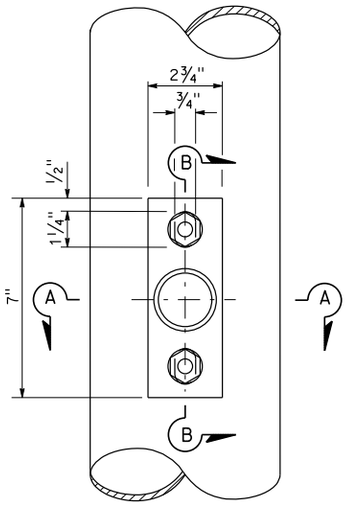

TOP VIEW

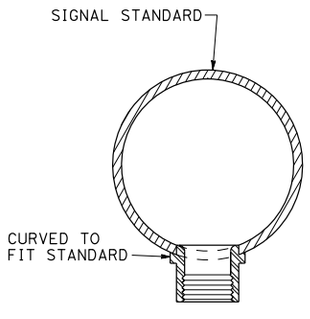

SECTION A-A

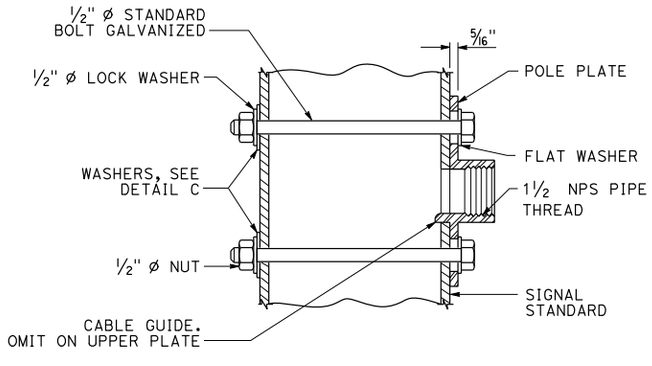

SECTION B-B

POLE PLATE FOR SIDE MOUNTED SIGNAL HEAD WITHOUT TERMINAL COMPARTMENT

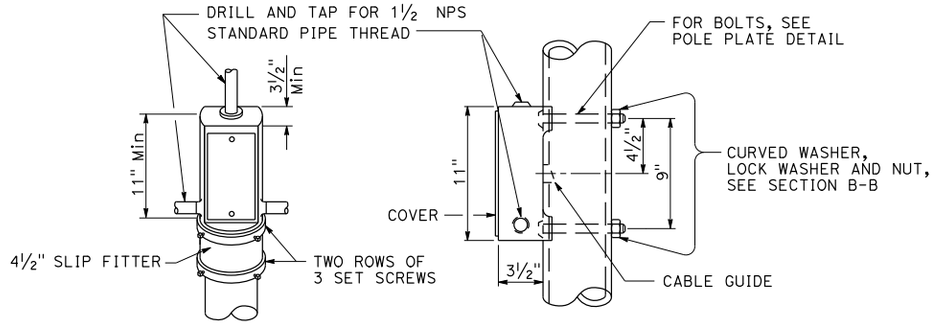

TOP MOUNTING SIDE MOUNTING

TERMINAL COMPARTMENT

STATE OF CALIFORNIA
DEPARTMENT OF TRANSPORTATION

ELECTRICAL SYSTEMS (SIGNAL HEAD MOUNTING)

NO SCALE

RSP ES-4D DATED JULY 21, 2017 SUPERSEDES STANDARD PLAN ES-4D DATED OCTOBER 30, 2015 - PAGE 443 OF THE STANDARD PLANS BOOK DATED 2015.

REVISED STANDARD PLAN RSP ES-4D

2015 REVISED STANDARD PLAN RSP ES-4D

4-28-17

© 2018 California Department of Transportation
All Rights Reserved

Dist	COUNTY	ROUTE	POST MILES TOTAL PROJECT	SHEET No.	TOTAL SHEETS
04	SCL	101,237	45.2/45.8, 2.7/3.3	643	736

H.R.Z
REGISTERED ELECTRICAL ENGINEER

Hamid Zolfaghari
No. E15636
Exp. 12-31-19
ELECTRICAL
REGISTERED PROFESSIONAL ENGINEER
STATE OF CALIFORNIA

April 20, 2018
PLANS APPROVAL DATE

THE STATE OF CALIFORNIA OR ITS OFFICERS OR AGENTS SHALL NOT BE RESPONSIBLE FOR THE ACCURACY OR COMPLETENESS OF SCANNED COPIES OF THIS PLAN SHEET.

TO ACCOMPANY PLANS DATED _____

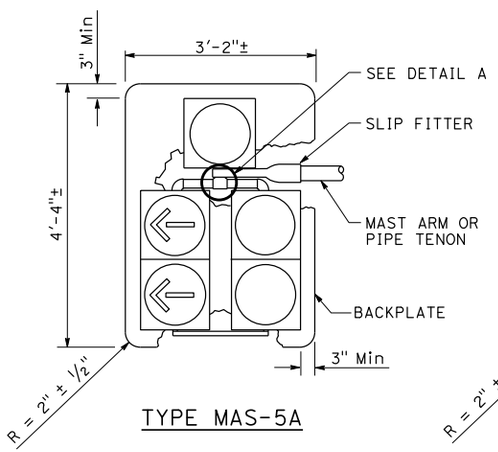

TYPE MAS-5A

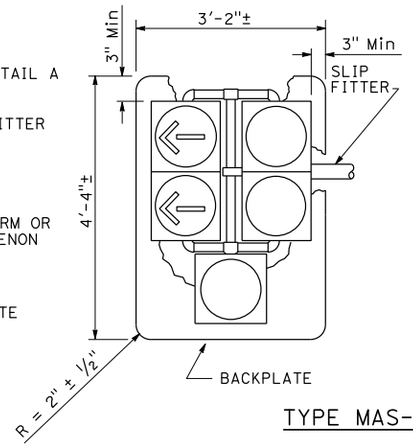

TYPE MAS-5B

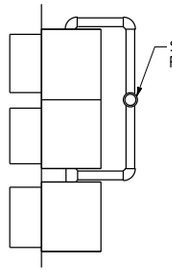

SIDE VIEW

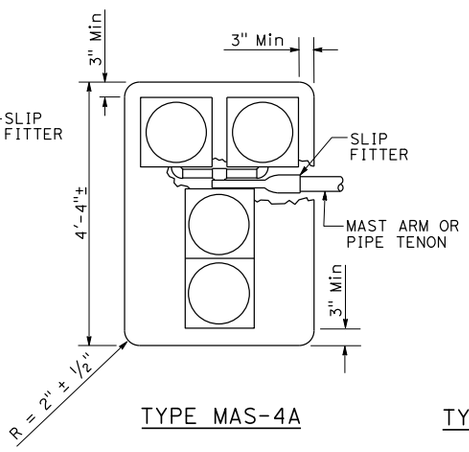

TYPE MAS-4A

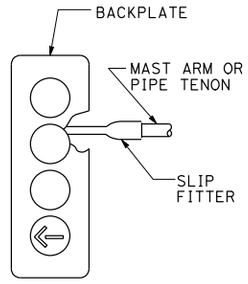

TYPE MAS-4B

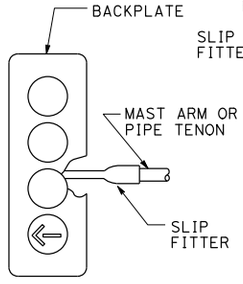

TYPE MAS-4C

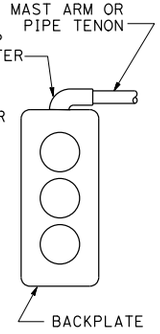

TYPE MAT

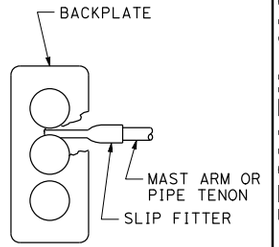

TYPE MAS

MAST ARM MOUNTINGS

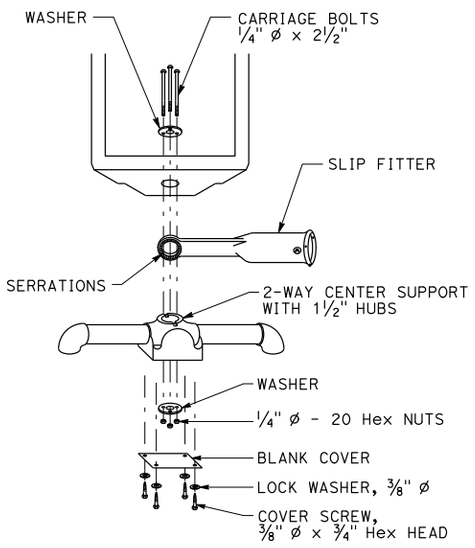

DETAIL A

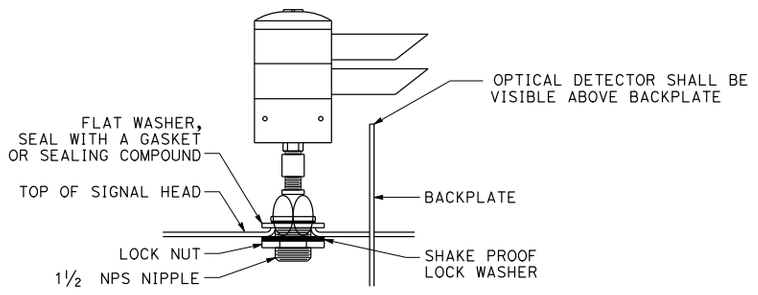

OPTICAL DETECTOR MOUNTING FOR EMERGENCY VEHICLE DETECTION

DETAIL B

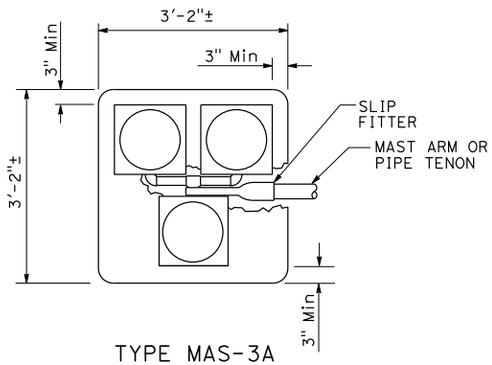

TYPE MAS-3A

STATE OF CALIFORNIA
DEPARTMENT OF TRANSPORTATION

ELECTRICAL SYSTEMS (SIGNAL HEADS AND OPTICAL DETECTOR MOUNTING)

NO SCALE

RSP ES-4E DATED APRIL 20, 2018 SUPERSEDES STANDARD PLAN ES-4E
DATED OCTOBER 30, 2015 - PAGE 444 OF THE STANDARD PLANS BOOK DATED 2015.

REVISED STANDARD PLAN RSP ES-4E

2015 REVISED STANDARD PLAN RSP ES-4E

11-15-17

© 2016 California Department of Transportation
All Rights Reserved

Dist	COUNTY	ROUTE	POST MILES TOTAL PROJECT	SHEET NO.	TOTAL SHEETS
04	SCL	101,237	45.2/45.8, 2.7/3.3	644	736

Theresa Gabriel
REGISTERED ELECTRICAL ENGINEER

Theresa Aziz Gabriel
No. E15129
Exp. 6-30-16
ELECTRICAL
REGISTERED PROFESSIONAL ENGINEER
STATE OF CALIFORNIA

April 15, 2016
PLANS APPROVAL DATE

THE STATE OF CALIFORNIA OR ITS OFFICERS OR AGENTS SHALL NOT BE RESPONSIBLE FOR THE ACCURACY OR COMPLETENESS OF SCANNED COPIES OF THIS PLAN SHEET.

TO ACCOMPANY PLANS DATED _____

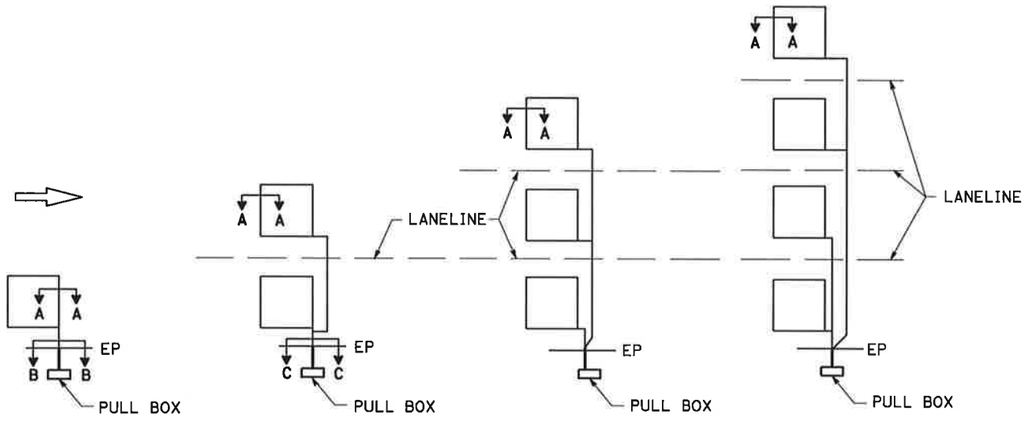

SAW CUT DETAILS

Type A loop detector configurations illustrated

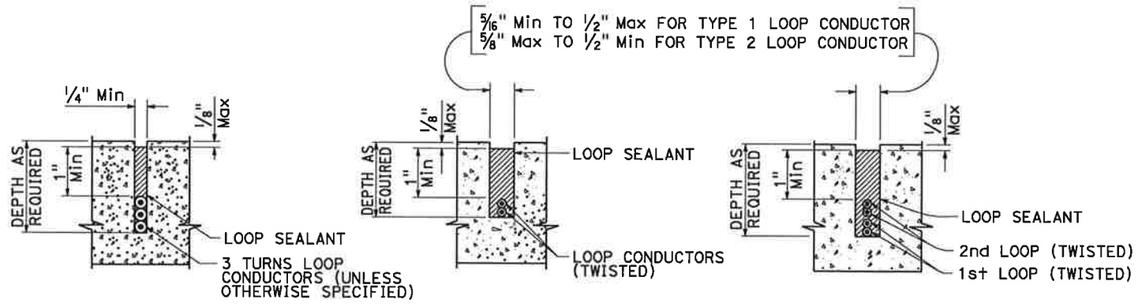

SECTION A-A SECTION B-B SECTION C-C

SLOT DETAILS - TYPE 1 AND TYPE 2 LOOP CONDUCTOR

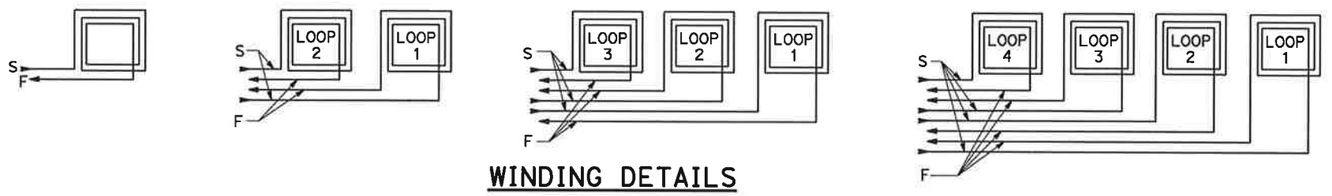

WINDING DETAILS

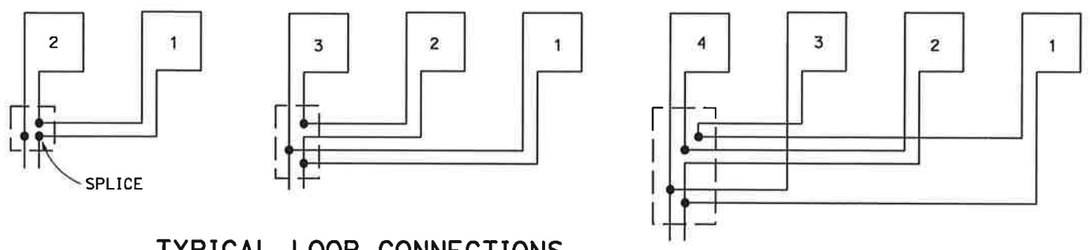

TYPICAL LOOP CONNECTIONS

Dashed lines represent the pull box

ABBREVIATIONS:

S - START
F - FINISH

STATE OF CALIFORNIA
DEPARTMENT OF TRANSPORTATION

ELECTRICAL SYSTEMS (LOOP DETECTORS)

NO SCALE

RSP ES-5A DATED APRIL 15, 2016 SUPERSEDES STANDARD PLAN ES-5A
DATED OCTOBER 30, 2015 - PAGE 445 OF THE STANDARD PLANS BOOK DATED 2015.

REVISED STANDARD PLAN RSP ES-5A

2015 REVISED STANDARD PLAN RSP ES-5A

1-12-16

© 2016 California Department of Transportation
All Rights Reserved

Dist	COUNTY	ROUTE	POST MILES TOTAL PROJECT	SHEET No.	TOTAL SHEETS
04	SCL	101,237	45.2/45.8, 2.7/3.3	645	736

Theresa Gabriel
REGISTERED ELECTRICAL ENGINEER

Theresa Aziz Gabriel No. E15129 Exp. 6-30-16 ELECTRICAL — REGISTERED PROFESSIONAL ENGINEER — STATE OF CALIFORNIA

April 15, 2016
PLANS APPROVAL DATE

THE STATE OF CALIFORNIA OR ITS OFFICERS OR AGENTS SHALL NOT BE RESPONSIBLE FOR THE ACCURACY OR COMPLETENESS OF SCANNED COPIES OF THIS PLAN SHEET.

TO ACCOMPANY PLANS DATED _____

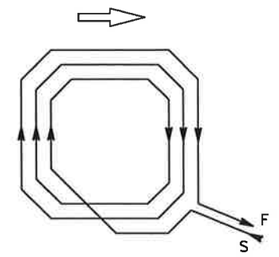

WINDING DETAIL

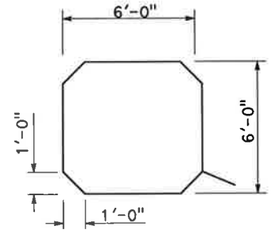

SAW CUT DETAIL

TYPE A LOOP DETECTOR CONFIGURATION

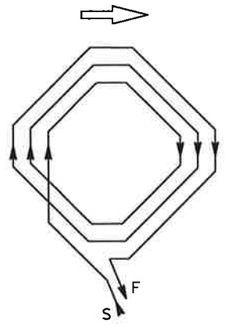

WINDING DETAIL

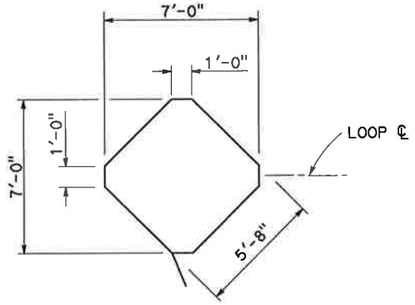

SAW CUT DETAIL

TYPE B LOOP DETECTOR CONFIGURATION

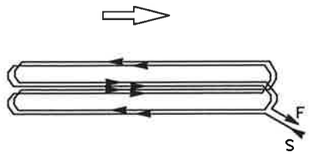

WINDING DETAIL

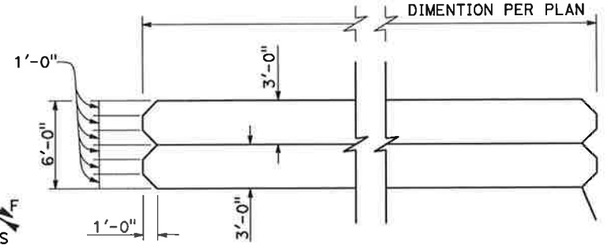

SAW CUT DETAIL

TYPE C LOOP DETECTOR CONFIGURATION

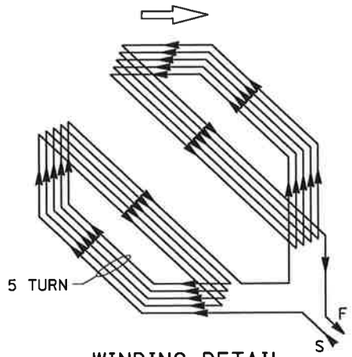

WINDING DETAIL

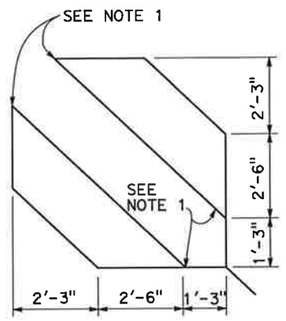

SAW CUT DETAIL

TYPE D LOOP DETECTOR CONFIGURATION

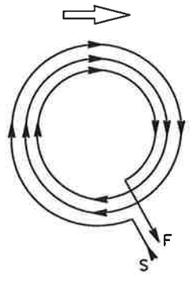

WINDING DETAIL

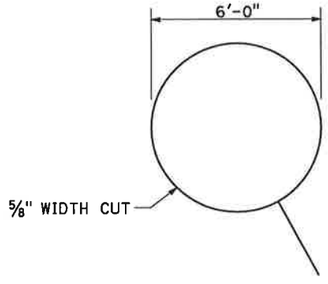

SAW CUT DETAIL

TYPE E LOOP DETECTOR CONFIGURATION

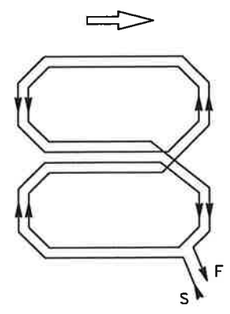

WINDING DETAIL

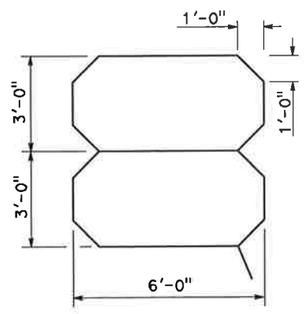

SAW CUT DETAIL

TYPE Q LOOP DETECTOR CONFIGURATION

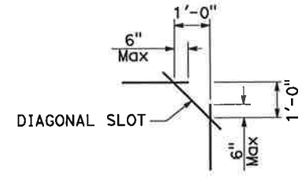

PLAN VIEW OF DIAGONAL SLOT AT CORNERS

NOTES:

1. Round corners of acute angle saw cuts to prevent damage to conductors.
2. Typical distance separating loops from edge to edge is 10' for Type A, B, D and E installation in single lane.
3. Use Type D loops for limit line detection and bicycle lanes.

STATE OF CALIFORNIA
DEPARTMENT OF TRANSPORTATION

ELECTRICAL SYSTEMS (DETECTORS)

NO SCALE

RSP ES-5B DATED APRIL 15, 2016 SUPERSEDES STANDARD PLAN ES-5B
DATED OCTOBER 30, 2015 - PAGE 446 OF THE STANDARD PLANS BOOK DATED 2015.

REVISED STANDARD PLAN RSP ES-5B

2015 REVISED STANDARD PLAN RSP ES-5B

1-22-16

© 2017 California Department of Transportation
All Rights Reserved

Dist	COUNTY	ROUTE	POST MILES TOTAL PROJECT	SHEET No.	TOTAL SHEETS
04	SCL	101,237	45.2/45.8, 2.7/3.3	646	736

REGISTERED CIVIL ENGINEER

July 21, 2017
PLANS APPROVAL DATE

Stanley P. Johnson No. C57793 Exp. 3-31-18 CIVIL — REGISTERED PROFESSIONAL ENGINEER — STATE OF CALIFORNIA

THE STATE OF CALIFORNIA OR ITS OFFICERS OR AGENTS SHALL NOT BE RESPONSIBLE FOR THE ACCURACY OR COMPLETENESS OF SCANNED COPIES OF THIS PLAN SHEET.

TO ACCOMPANY PLANS DATED _____

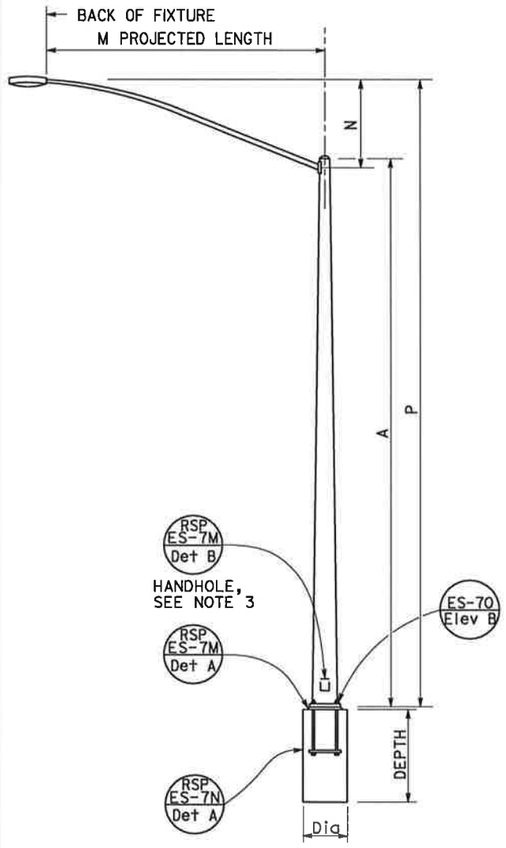

TYPE 15 AND TYPE 21
ELEVATION A

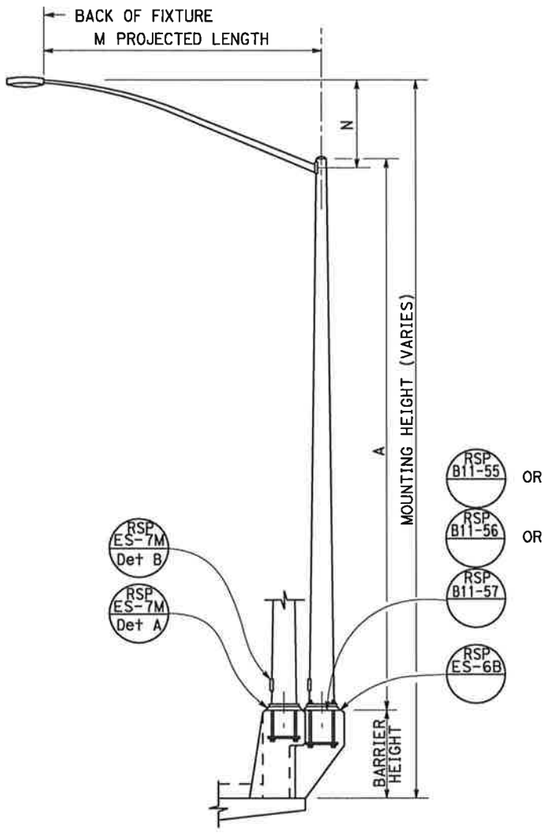

TYPE 15 AND TYPE 21 BARRIER RAIL MOUNTED
ELEVATION B

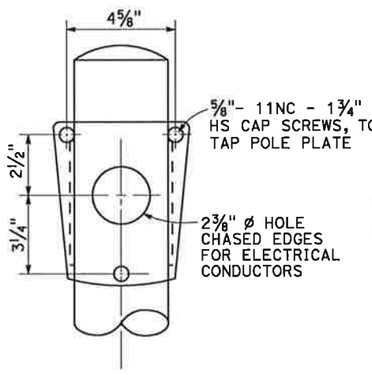

FRONT VIEW

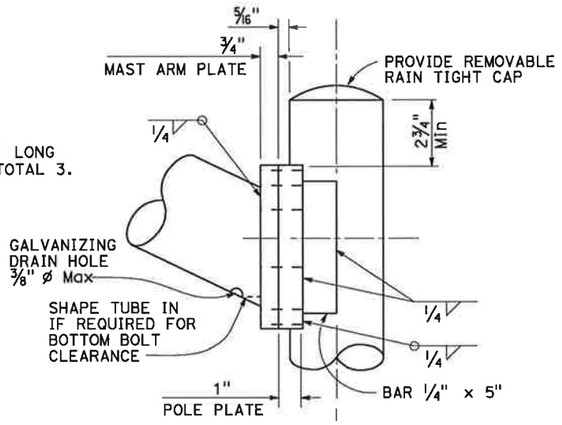

SIDE VIEW

LUMINAIRE MAST ARM CONNECTION
DETAIL R

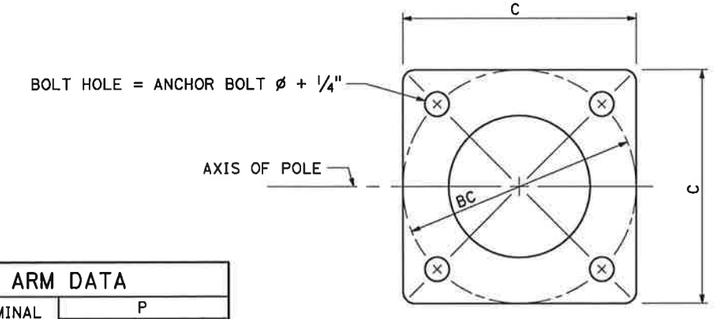

BASE PLATE
DETAIL A

POLE TYPE	POLE DATA				BASE PLATE DATA				CIDH PILE FOUNDATION	
	A HEIGHT	Min OD BASE	Min OD TOP	WALL THICKNESS	C	BC = BOLT CIRCLE	THICKNESS	ANCHOR BOLT SIZE	Dia	DEPTH
15	30'-0"	8"	3 11⁄16"	0.1196"	1'-0"	1'-0"	1½"	1" ø x 36" *	2'-6"	6'-0"
21	35'-0"	8⅝"	3 3⁄16"	0.1793"			2"	1¼" ø x 36" *		7'-0"

* FOR BARRIER RAIL BOLTS, SEE REVISED STANDARD PLAN RSP ES-6B.

LUMINAIRE MAST ARM DATA					
M PROJECTED LENGTH	N RISE	Min OD AT POLE	NOMINAL THICKNESS	P TYPE 15	P TYPE 21
6'-0"	2'-0"±	3¼"	0.1196"	31'-6"±	36'-6"±
8'-0"	2'-6"±	3½"		32'-0"±	37'-0"±
10'-0"	3'-3"±	3⅞"		32'-9"±	37'-9"±
12'-0"	4'-3"±			33'-9"±	38'-9"±
15'-0"	4'-9"±	4¼"		34'-3"±	39'-3"±

NOTES:

1. ☐ Indicates mast arm length to be used unless otherwise noted on the plans.
2. For Type 15-SB, use Type 15 standard with Type 30 slip base plate details, see Standard Plan ES-6F.
3. Handhole shall be located on the downstream side of traffic.
4. For additional notes and details, see Revised Standard Plans RSP ES-7M and RSP ES-7N.

STATE OF CALIFORNIA
DEPARTMENT OF TRANSPORTATION

ELECTRICAL SYSTEMS (LIGHTING STANDARD, TYPES 15 AND 21)

NO SCALE

RSP ES-6A DATED JULY 21, 2017 SUPERSEDES RSP ES-6A DATED JULY 15, 2016 AND STANDARD PLAN ES-6A DATED OCTOBER 30, 2015 - PAGE 449 OF THE STANDARD PLANS BOOK DATED 2015.

REVISED STANDARD PLAN RSP ES-6A

2015 REVISED STANDARD PLAN RSP ES-6A

4-25-17

© 2016 California Department of Transportation
All Rights Reserved

Dist	COUNTY	ROUTE	POST MILES TOTAL PROJECT	SHEET No.	TOTAL SHEETS
04	SCL	101,237	45.2/45.8, 2.7/3.3	647	736

REGISTERED CIVIL ENGINEER

July 15, 2016
PLANS APPROVAL DATE

REGISTERED PROFESSIONAL ENGINEER
Stanley P. Johnson
No. C57793
Exp. 3-31-18
CIVIL
STATE OF CALIFORNIA

THE STATE OF CALIFORNIA OR ITS OFFICERS OR AGENTS SHALL NOT BE RESPONSIBLE FOR THE ACCURACY OR COMPLETENESS OF SCANNED COPIES OF THIS PLAN SHEET.

TO ACCOMPANY PLANS DATED _____

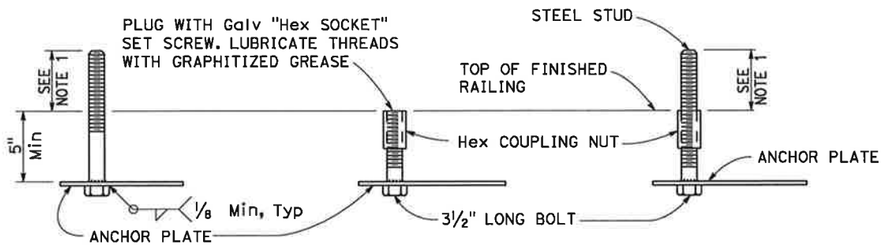

FOR IMMEDIATE INSTALLATION
DETAIL B-1

FOR FUTURE INSTALLATION WITH PLUG
DETAIL B-2

FOR INSTALLATION ON FUTURE ANCHORAGE WITH STUD
DETAIL B-3

ELECTROLIER ANCHORAGES
DETAIL B

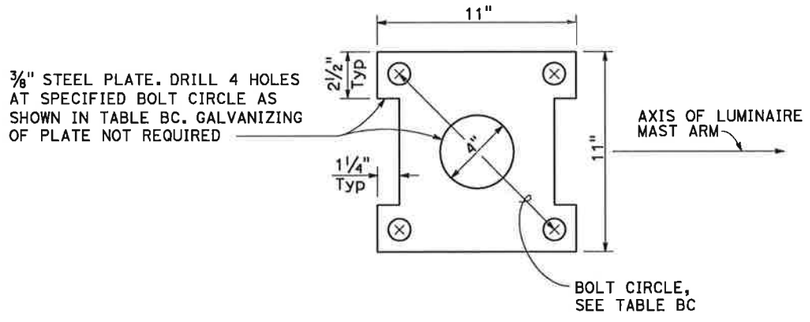

ANCHOR PLATE
DETAIL A

TABLE BC				
TYPE	BC = BOLT CIRCLE	ANCHOR BOLT DIAMETER	COUPLING NUT BASIC LENGTH	SET SCREW LENGTH DETAIL B-2
15	1'-0"	1"	3"	1½"
21		1¼"	3¾"	1⅞"

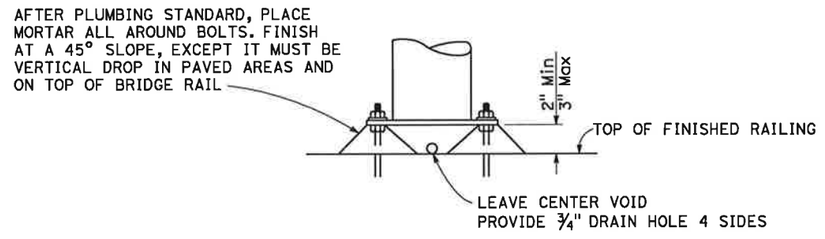

GROUTING AT ELECTROLIER
DETAIL N

NOTES:

1. Anchor bolt or stud length shall be such that thread extends ½" maximum above nut on level base plate after grouting. See Detail N.
2. Electrolier anchor bolts shall be held in position for pouring by means of anchor plates and suitable templates. Deviation from the true position, vertical and height shall not exceed 1/16".
3. See railing sheets for reinforcement and structural details at electroliers and pull boxes.

STATE OF CALIFORNIA
DEPARTMENT OF TRANSPORTATION

ELECTRICAL SYSTEMS (ELECTROLIER ANCHORAGE AND GROUTING FOR TYPE 15 AND TYPE 21 BARRIER RAIL MOUNTED)

NO SCALE

RSP ES-6B DATED JULY 15, 2016 SUPERSEDES STANDARD PLAN ES-6B DATED OCTOBER 30, 2015 - PAGE 450 OF THE STANDARD PLANS BOOK DATED 2015.

REVISED STANDARD PLAN RSP ES-6B

2015 REVISED STANDARD PLAN RSP ES-6B

4-15-16

© 2017 California Department of Transportation
All Rights Reserved

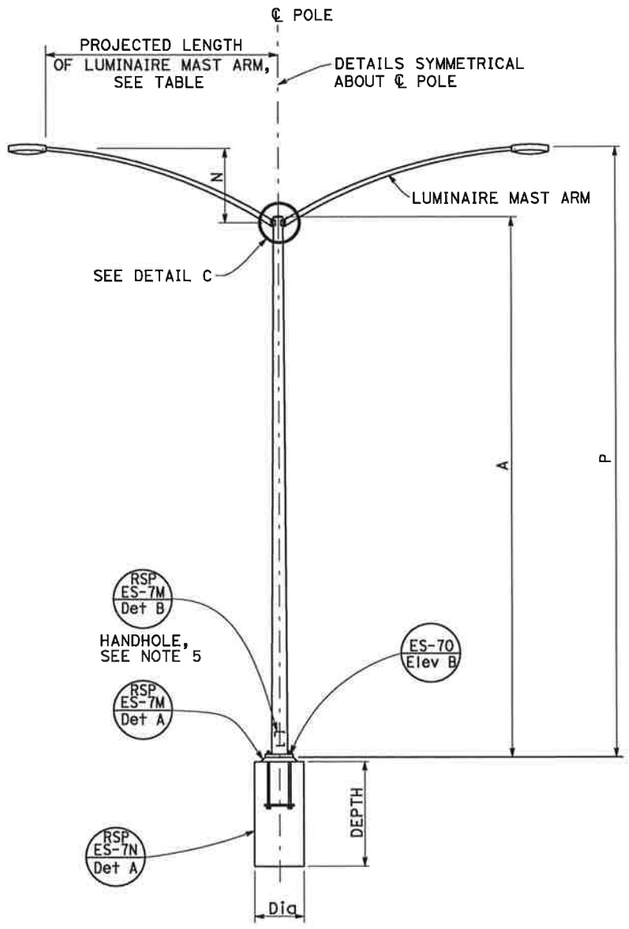

TYPE 15D AND TYPE 21D
ELEVATION A

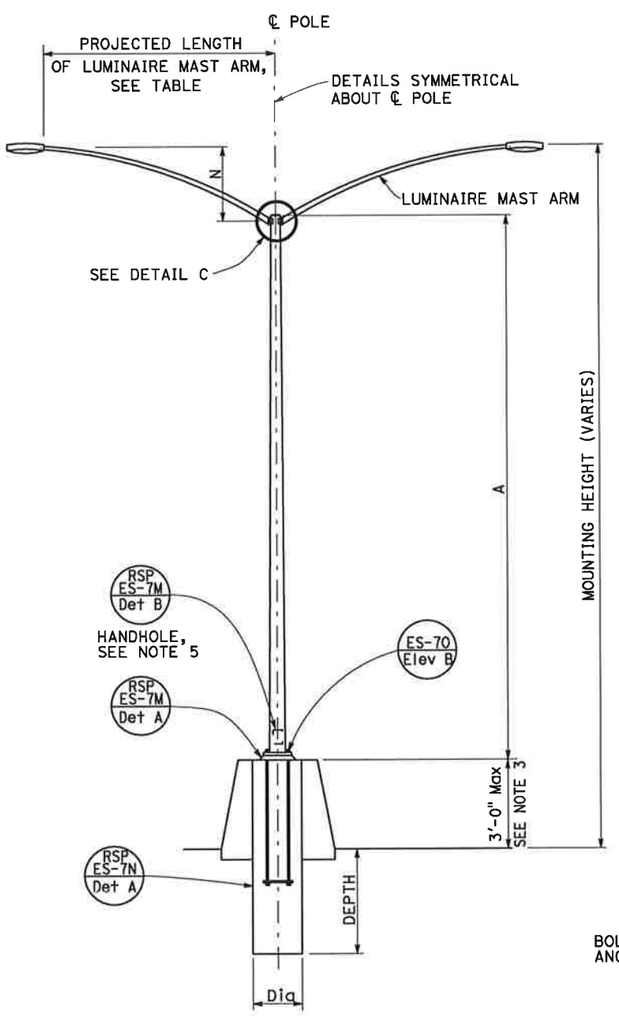

TYPE 15D AND TYPE 21D
MEDIAN BARRIER MOUNTED
ELEVATION B

POLE TYPE	POLE DATA				BASE PLATE DATA				CIDH PILE FOUNDATION	
	A HEIGHT	Min OD BASE	Min OD TOP	Min THICKNESS	C	BC = BOLT CIRCLE	THICKNESS	ANCHOR BOLT SIZE	Dia	DEPTH
15D	30'-0"	8"	3 11/16"	0.1793"	1'-0"	1'-0"	1 1/2"	1 1/4" ø x 42"	2'-6"	7'-0"
21D	35'-0"	8 5/8"								

LUMINAIRE MAST ARM DATA					
PROJECTED LENGTH	N RISE	Min OD AT POLE	NOMINAL THICKNESS	P TYPE 15D	P TYPE 21D
6'-0"	2'-0"±	3 1/4"	0.1196"	31'-6"±	36'-6"±
8'-0"	2'-6"±	3 1/2"		32'-0"±	37'-0"±
10'-0"	3'-3"±	3 7/8"		32'-9"±	37'-9"±
12'-0"	4'-3"±			33'-9"±	38'-9"±

NOTES:

1. [ ] Indicates mast arm length to be used unless otherwise noted on the plans.
2. For additional notes and details, see Revised Standard Plans RSP ES-7M and RSP ES-7N.
3. See Concrete Barrier Details Type 60F and 60SF.
4. For locations with one arm, plug unused cap screw holes and chased outlet with galvanized cap screws and knockout plug.
5. Handhole shall be located perpendicular to the luminaire mast arm and as directed by the Engineer.

Dist	COUNTY	ROUTE	POST MILES TOTAL PROJECT	SHEET No.	TOTAL SHEETS
04	SCL	101,237	45.2/45.8, 2.7/3.3	648	736

REGISTERED CIVIL ENGINEER
Stanley P. Johnson No. C57793 Exp. 3-31-18 CIVIL
REGISTERED PROFESSIONAL ENGINEER STATE OF CALIFORNIA
July 21, 2017
PLANS APPROVAL DATE
THE STATE OF CALIFORNIA OR ITS OFFICERS OR AGENTS SHALL NOT BE RESPONSIBLE FOR THE ACCURACY OR COMPLETENESS OF SCANNED COPIES OF THIS PLAN SHEET.

TO ACCOMPANY PLANS DATED _____

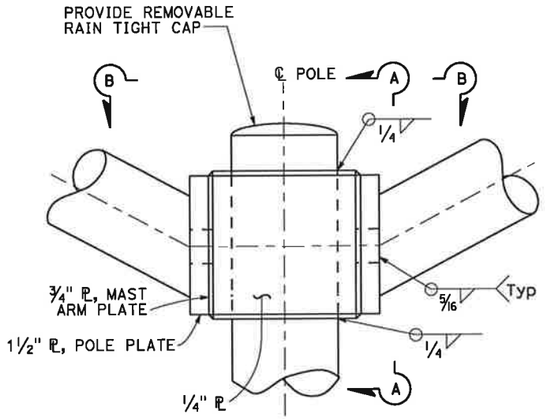

DETAIL C

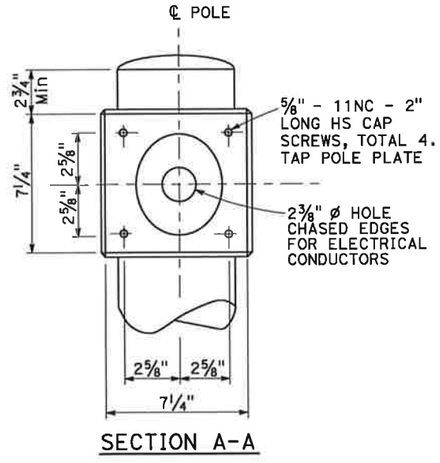

SECTION A-A

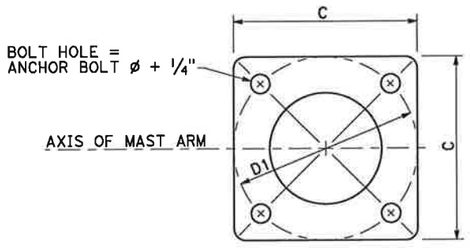

BASE PLATE
DETAIL B

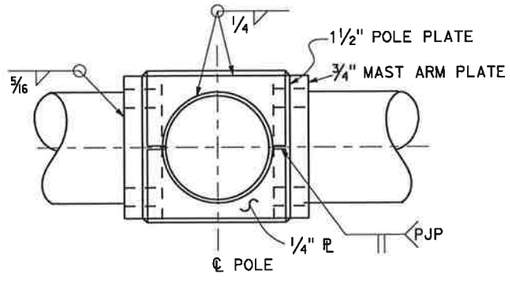

SECTION B-B

STATE OF CALIFORNIA
DEPARTMENT OF TRANSPORTATION

ELECTRICAL SYSTEMS (LIGHTING STANDARD, TYPES 15D AND 21D, DOUBLE LUMINAIRE MAST ARM)

NO SCALE

RSP ES-6D DATED JULY 21, 2017 SUPERSEDES RSP ES-6D DATED JULY 15, 2016 AND STANDARD PLAN ES-6D DATED OCTOBER 30, 2015 - PAGE 452 OF THE STANDARD PLANS BOOK DATED 2015.

REVISED STANDARD PLAN RSP ES-6D

2015 REVISED STANDARD PLAN RSP ES-6D

4-7-17

© 2017 California Department of Transportation
All Rights Reserved

Dist	COUNTY	ROUTE	POST MILES TOTAL PROJECT	SHEET No.	TOTAL SHEETS
04	SCL	101,237	45.2/45.8, 2.7/3.3	649	736

REGISTERED CIVIL ENGINEER

July 21, 2017
PLANS APPROVAL DATE

Stanley P. Johnson No. C57793 Exp. 3-31-18 CIVIL — REGISTERED PROFESSIONAL ENGINEER — STATE OF CALIFORNIA

THE STATE OF CALIFORNIA OR ITS OFFICERS OR AGENTS SHALL NOT BE RESPONSIBLE FOR THE ACCURACY OR COMPLETENESS OF SCANNED COPIES OF THIS PLAN SHEET.

TO ACCOMPANY PLANS DATED _____

NOTES:

1. For additional notes, details and data for Type 15TS and Type 21TS Standards, see Revised Standard Plan RSP ES-6A.
2. Handhole shall be located on the downstream side of traffic.

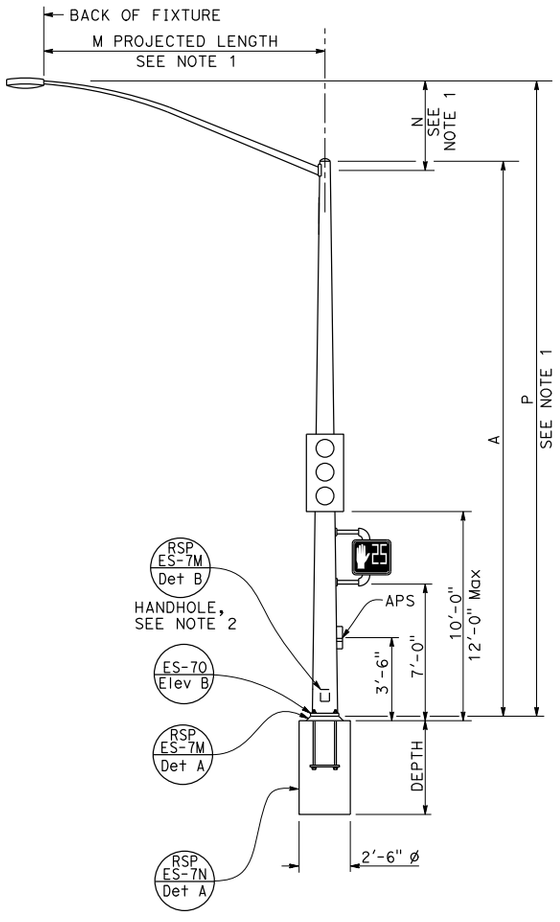

TYPE 15TS AND 21TS STANDARD
ELEVATION A
(See Note 1)

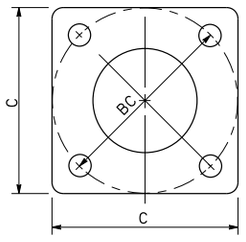

BASE PLATE
TYPE 15TS AND 21TS
DETAIL A

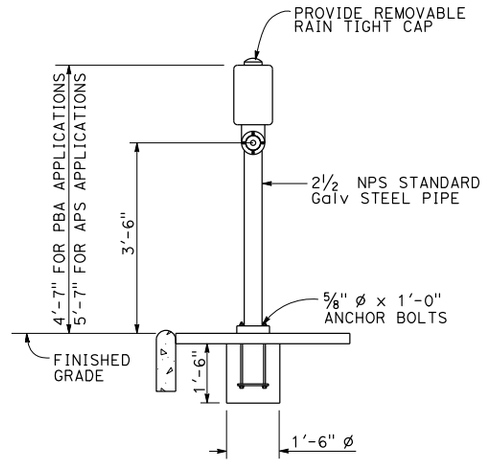

ELEVATION

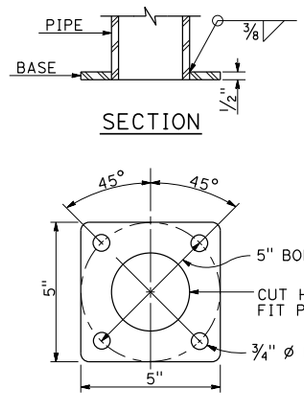

BASE PLATE
PBA POST

PUSH BUTTON ASSEMBLY POST
DETAIL B

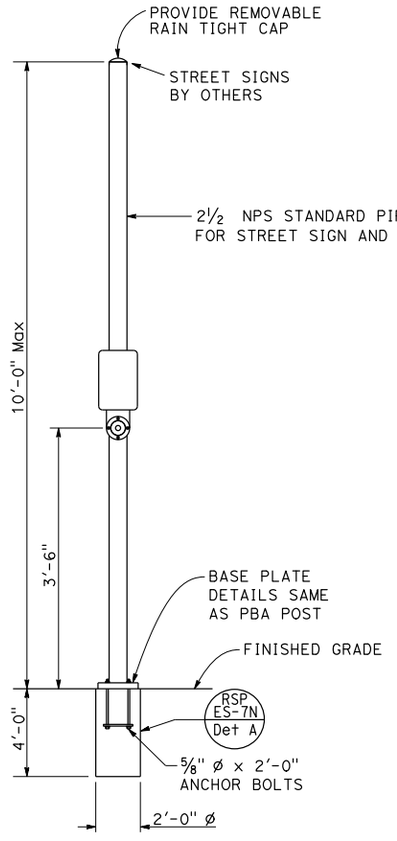

COMBINED STREET SIGN
PUSH BUTTON ASSEMBLY POST
DETAIL C

POLE TYPE	POLE DATA				BASE PLATE DATA				CIDH
	A HEIGHT	Min OD BASE	Min OD TOP	WALL THICKNESS	C	BC = BOLT CIRCLE	THICKNESS	ANCHOR BOLT SIZE	DEPTH
15TS	30'-0"	8"	3 11/16"	0.1793"	1'-1½"	1'-0"	2"	1½" ø x 42"	7'-6"
21TS	35'-0"	9⅜"	3⅜6"		1'-3"	1'-2"			8'-6"

STATE OF CALIFORNIA
DEPARTMENT OF TRANSPORTATION

ELECTRICAL SYSTEMS (SIGNAL AND LIGHTING STANDARD, TYPE TS, AND PUSH BUTTON ASSEMBLY POST)

NO SCALE

RSP ES-7A DATED JULY 21, 2017 SUPERSEDES RSP ES-7A DATED JULY 15, 2016 AND STANDARD PLAN ES-7A DATED OCTOBER 30, 2015 - PAGE 456 OF THE STANDARD PLANS BOOK DATED 2015.

REVISED STANDARD PLAN RSP ES-7A

2015 REVISED STANDARD PLAN RSP ES-7A

4-7-17

© 2016 California Department of Transportation
All Rights Reserved

Dist	COUNTY	ROUTE	POST MILES TOTAL PROJECT	SHEET No.	TOTAL SHEETS
04	SCL	101,237	45.2/45.8, 2.7/3.3	650	736

REGISTERED CIVIL ENGINEER

July 15, 2016
PLANS APPROVAL DATE

REGISTERED PROFESSIONAL ENGINEER — Stanley P. Johnson — No. C57793 — Exp. 3-31-18 — CIVIL — STATE OF CALIFORNIA

THE STATE OF CALIFORNIA OR ITS OFFICERS OR AGENTS SHALL NOT BE RESPONSIBLE FOR THE ACCURACY OR COMPLETENESS OF SCANNED COPIES OF THIS PLAN SHEET.

TO ACCOMPANY PLANS DATED _____

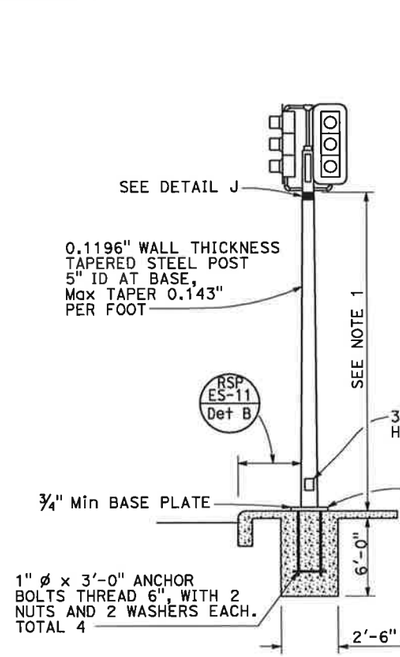

TYPE 1-A STANDARD
DETAIL A-1

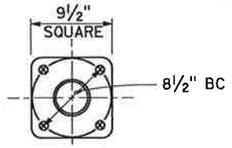

BASE PLATE
DETAIL A-2
For Type 1-A
For Type 1-C
For Type 1-D

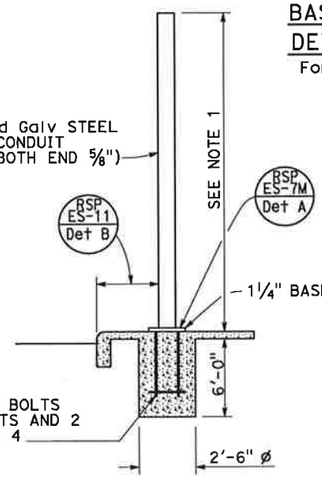

TYPE 1-B STANDARD
DETAIL A-3

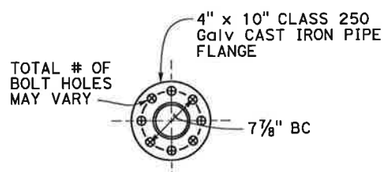

BASE PLATE
DETAIL A-4
For Type 1-B

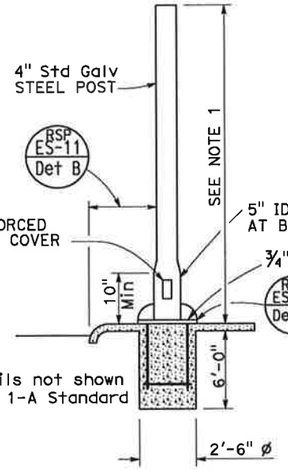

NOTE:
For Details not shown see Type 1-A Standard

TYPE 1-C STANDARD
DETAIL A-5

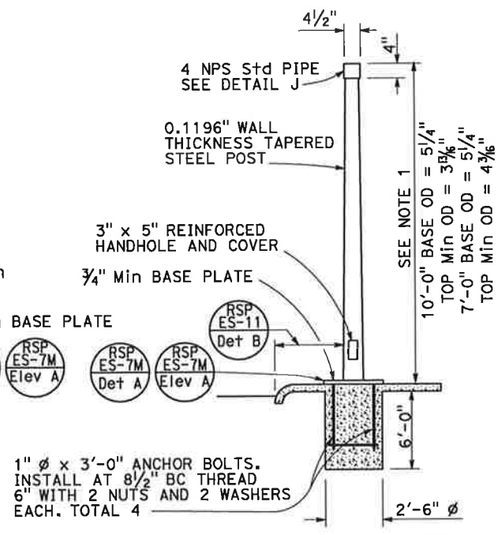

TYPE 1-D STANDARD
DETAIL A-6

NOTES:

1. Standards shall be 10'-0" ± 2" for vehicle signals and 7'-0" ± 2" for pedestrian signals unless shorter pole is noted on project plans.
2. Top of standards shall be 4½" OD.
3. Conduits shall extend 2" maximum above finished surface of foundation and for Types 1-A, 1-C and 1-D shall be sloped toward handhole.
4. Anchor bolts shall be bonded to conduit or grounding conductor.
5. For additional notes and details, see Revised Standard Plans RSP ES-7M and RSP ES-7N.
6. Pour foundation concrete against undisturbed soil.
7. For standards with handhole, locate in the downstream side of traffic.
8. Coupling nuts to be used only when shown or specified on project plans.

TYPE 1 SIGNAL STANDARDS
DETAIL A

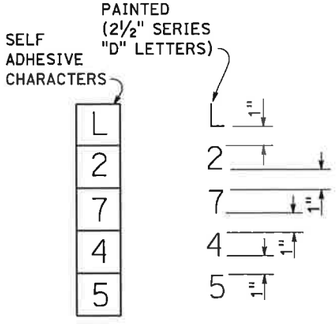

IDENTIFICATION CHARACTER DETAIL
DETAIL B-1

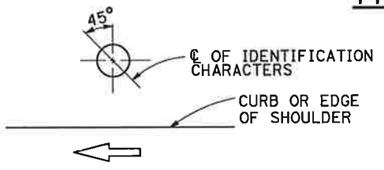

DETAIL B-3

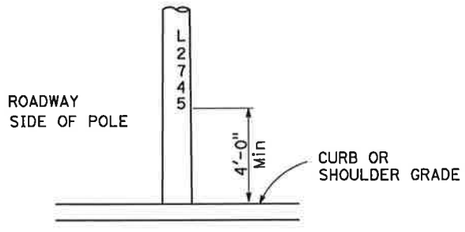

TYPICAL IDENTIFICATION CHARACTER FORMAT
DETAIL B-2

LOCATION OF EQUIPMENT IDENTIFICATION CHARACTERS ON STANDARDS AND POSTS
DETAIL B

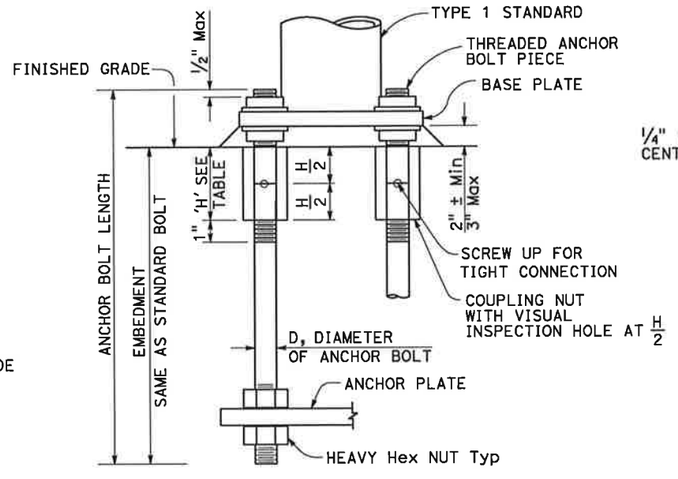

ANCHOR BOLTS WITH SLEEVE NUTS
DETAIL C
(See Note 8)

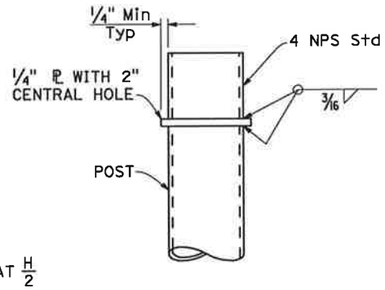

DETAIL J

COUPLING NUT TABLE	
BOLT DIAMETER	NUT TABLE THICKNESS 'H'
¾"	2¼"
1"	3"

STATE OF CALIFORNIA
DEPARTMENT OF TRANSPORTATION

ELECTRICAL SYSTEMS (SIGNAL AND LIGHTING STANDARD, TYPE 1 AND EQUIPMENT IDENTIFICATION CHARACTERS)

NO SCALE

RSP ES-7B DATED JULY 15, 2016 SUPERSEDES STANDARD PLAN ES-7B DATED OCTOBER 30, 2015 - PAGE 457 OF THE STANDARD PLANS BOOK DATED 2015.

REVISED STANDARD PLAN RSP ES-7B

2015 REVISED STANDARD PLAN RSP ES-7B

6-20-16

© 2018 California Department of Transportation
All Rights Reserved

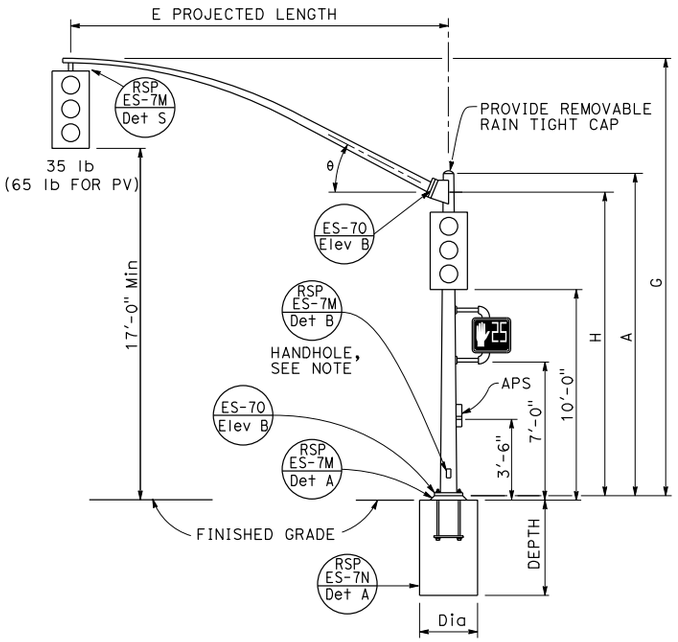

TYPE 16-1-100, 18-1-100

ELEVATION A

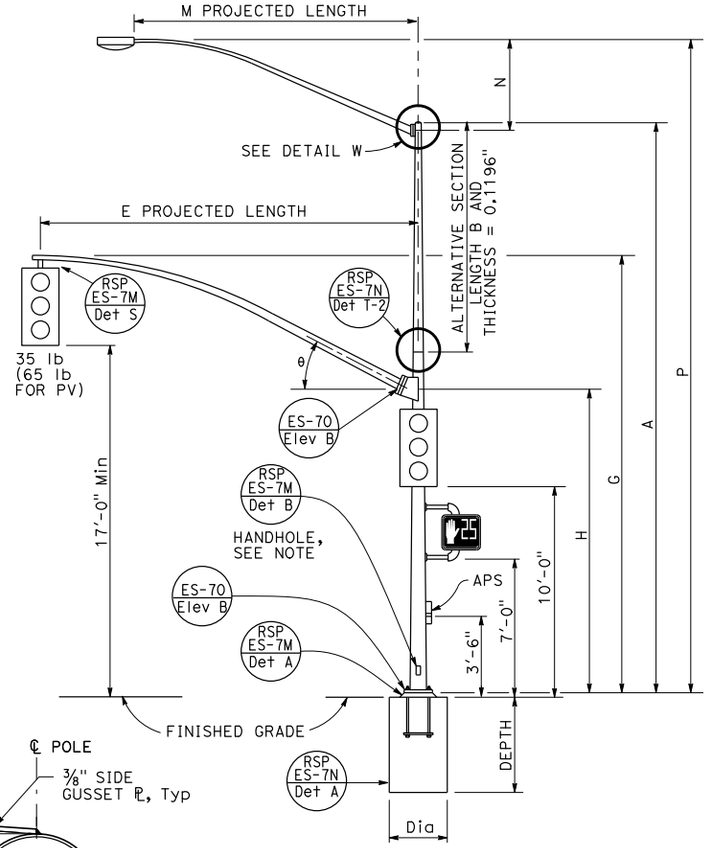

TYPE 19-1-100, 19A-1-100

ELEVATION B

NOTES:

1. Handhole shall be located on the downstream side of traffic.
2. Δ = Luminaire mast arm skew -90° or +90° default 0°

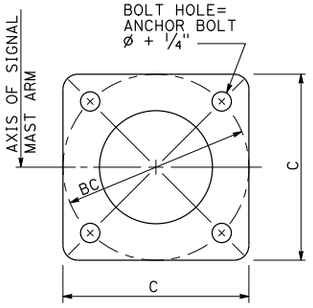

DETAIL D

BASE PLATE

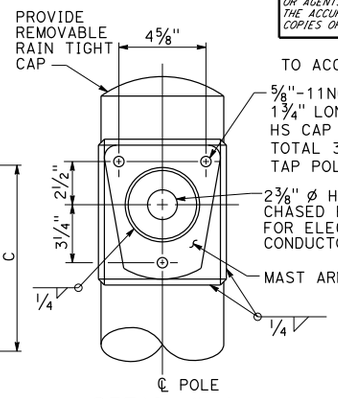

DETAIL W-1

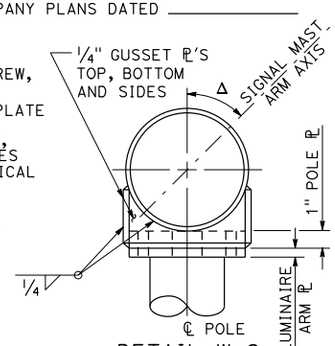

DETAIL W-2

LUMINAIRE MAST ARM CONNECTION

DETAIL W

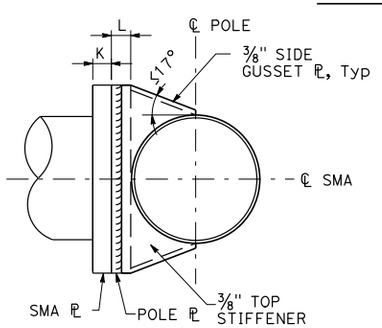

SECTION B-B

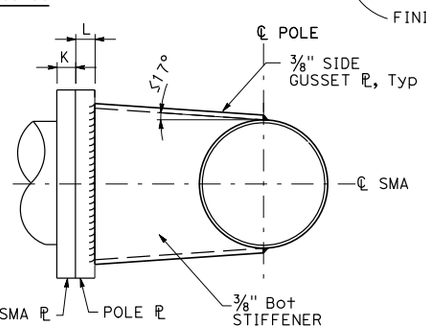

SECTION C-C

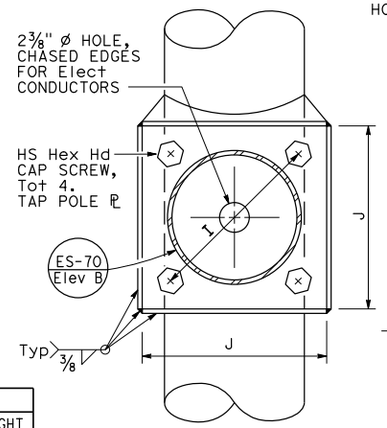

SECTION A-A

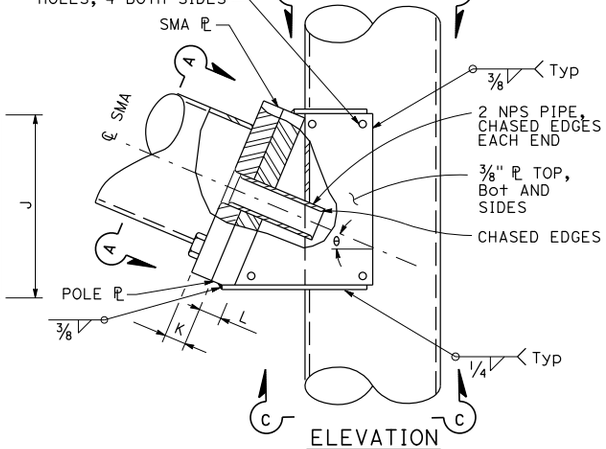

ELEVATION

SIGNAL MAST ARM CONNECTION

DETAIL A

SIGNAL MAST ARM DATA										
E PROJECTED LENGTH	G MOUNTING HEIGHT	H	Min OD AT POLE	THICKNESS	I BOLT CIRCLE	HS CAP SCREWS	J PLATE SIZE	K MAST ARM ℙ THICKNESS	L POLE ℙ THICKNESS	θ
15'-0"	21'-8"±	17'-6"	7 3/8"	0.1793"	12"	1 1/4"-7NC-3"	1'-0"	1 1/4"	1 1/2"	23°
20'-0"			8"				1'-1"			
25'-0"	22'-8"±	16'-0"	9"							
30'-0"	23'-0"±		10"							

LUMINAIRE MAST ARM DATA					
M PROJECTED LENGTH	N RISE	Min OD AT POLE	THICKNESS	P MOUNTING HEIGHT	
				30'-0" POLE	35'-0" POLE
6'-0"	2'-0"±	3 1/4"	0.1196"	31'-6"±	36'-6"±
8'-0"	2'-6"±	3 1/2"		32'-0"±	37'-0"±
10'-0"	3'-3"±	3 7/8"		32'-9"±	37'-9"±
12'-0"	4'-3"±			33'-9"±	38'-9"±
15'-0"	4'-9"±	4 1/4"		34'-3"±	39'-3"±

POLE TYPE	LOAD CASE	WIND VELOCITY (mph)	POLE DATA							BASE PLATE DATA				LUMINAIRE MAST ARM	SIGNAL MAST ARM	CIDH PILE FOUNDATION	
			A HEIGHT	Min OD		THICKNESS	ALTERNATIVE SECTION			C	BC = BOLT CIRCLE	THICKNESS	ANCHOR BOLT SIZE			Dia	DEPTH
				BASE	TOP		B LENGTH	BOTTOM	TOP								
16-1-100	1	100	18'-6"	12"	9 3/8"	0.2391" OR 0.25"	None			1'-6"	1'-4"	2"	1 3/4"Ø x 42"	NONE	15'-0", [20'-0"]	3'-0"	9'-0"
18-1-100			17'-0"				None							NONE			
19-1-100			30'-0"	14"	9 3/4"		10'-0"	11 1/8"	9 3/4"	1'-10"	1'-8"	2 1/2"	2"Ø x 42"	6'-15' [12'-0"]	25'-0", [30'-0"]	3'-6"	10'-0"
19A-1-100			35'-0"		9"		15'-0"		9"					6'-15' [15'-0"]			

[ ] INDICATES MAST ARM LENGTH TO BE USED UNLESS OTHERWISE NOTED ON PLANS.

STATE OF CALIFORNIA
DEPARTMENT OF TRANSPORTATION

ELECTRICAL SYSTEMS (SIGNAL AND LIGHTING STANDARD, CASE 1 SIGNAL MAST ARM LOADING, WIND VELOCITY = 100 MPH AND SIGNAL MAST ARM LENGTHS 15' TO 30')

NO SCALE

RSP ES-7C DATED APRIL 20, 2018 SUPERSEDES RSP RSP ES-7C DATED JULY 21, 2017 AND RSP ES-7C DATED JULY 15, 2016 AND STANDARD PLAN ES-7C DATED OCTOBER 30, 2015 - PAGE 458 OF THE STANDARD PLANS BOOK DATED 2015.

REVISED STANDARD PLAN RSP ES-7C

Dist	COUNTY	ROUTE	POST MILES TOTAL PROJECT	SHEET No.	TOTAL SHEETS
04	SCL	101,237	45.2/45.8, 2.7/3.3	651	736

REGISTERED CIVIL ENGINEER

April 20, 2018
PLANS APPROVAL DATE

Stanley P. Johnson No. C57793 Exp. 3-31-20 CIVIL — REGISTERED PROFESSIONAL ENGINEER — STATE OF CALIFORNIA

THE STATE OF CALIFORNIA OR ITS OFFICERS OR AGENTS SHALL NOT BE RESPONSIBLE FOR THE ACCURACY OR COMPLETENESS OF SCANNED COPIES OF THIS PLAN SHEET.

TO ACCOMPANY PLANS DATED _____

2015 REVISED STANDARD PLAN RSP ES-7C

11-15-17

© 2017 California Department of Transportation
All Rights Reserved

Dist	COUNTY	ROUTE	POST MILES TOTAL PROJECT	SHEET No.	TOTAL SHEETS
04	SCL	101,237	45.2/45.8, 2.7/3.3	652	736

REGISTERED CIVIL ENGINEER

July 21, 2017
PLANS APPROVAL DATE

REGISTERED PROFESSIONAL ENGINEER — Stanley P. Johnson — No. C57793 — Exp. 3-31-18 — CIVIL — STATE OF CALIFORNIA

THE STATE OF CALIFORNIA OR ITS OFFICERS OR AGENTS SHALL NOT BE RESPONSIBLE FOR THE ACCURACY OR COMPLETENESS OF SCANNED COPIES OF THIS PLAN SHEET.

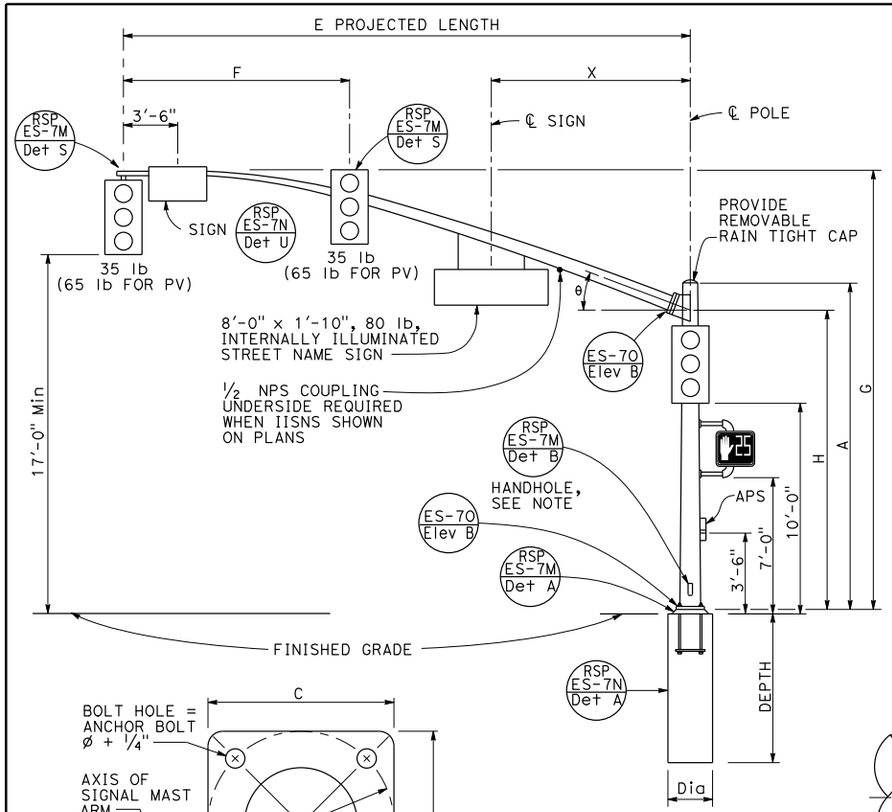

TYPE 18-4-100, 23-4-100, 27-4-100
ELEVATION A

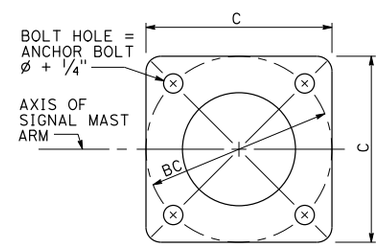

BASE PLATE
DETAIL B

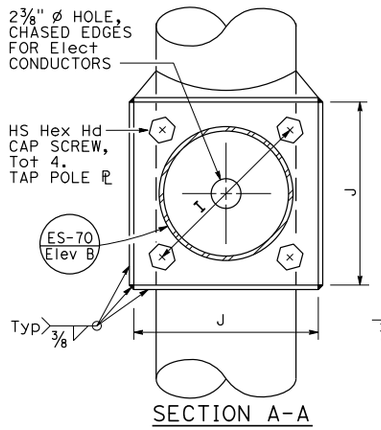

SECTION A-A

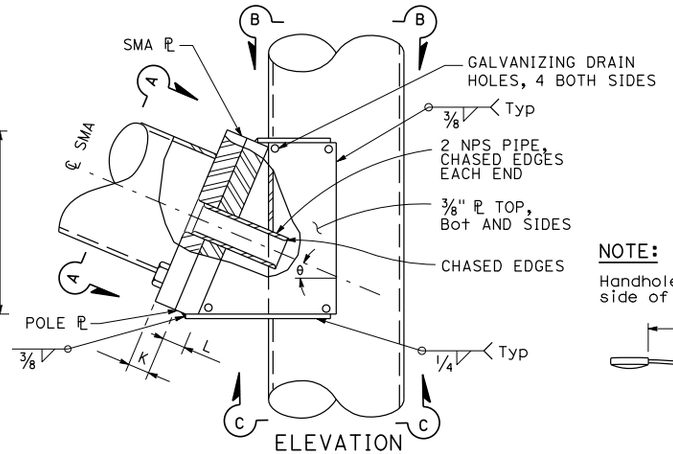

ELEVATION

SIGNAL MAST ARM CONNECTION

DETAIL A

NOTE: TO ACCOMPANY PLANS DATED _____

Handhole shall be located on the downstream side of traffic.

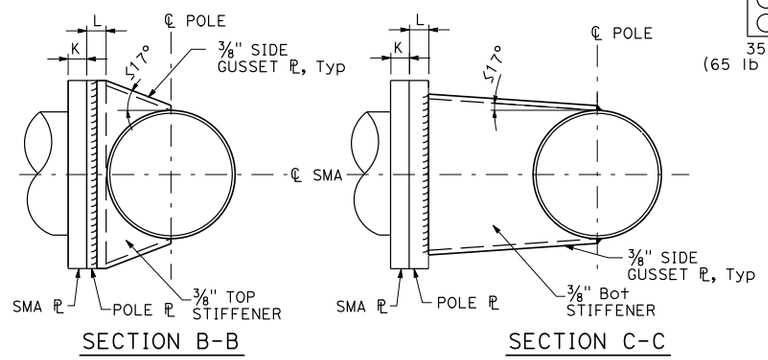

SECTION B-B

SECTION C-C

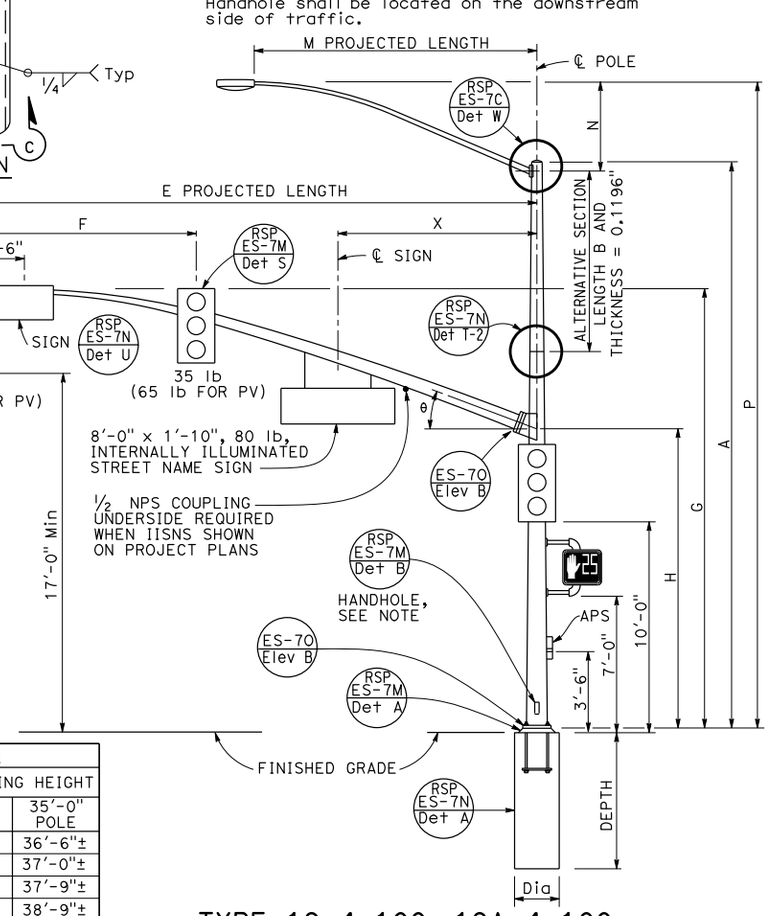

TYPE 19-4-100, 19A-4-100, 24-4-100, 24A-4-100, 26-4-100, 26A-4-100
ELEVATION B

SIGNAL MAST ARM DATA

E PROJECTED LENGTH	F Min SPACING	G MOUNTING HEIGHT	H	Min OD AT POLE	THICKNESS	I BOLT CIRCLE	HS CAP SCREWS	J PLATE SIZE	K MAST ARM ℄ THICKNESS	L POLE ℄ THICKNESS	θ	X Max
25'-0"	10'-0"	22'-8"±	16'-0"	7⅜"	0.2391"	12"	1¼"-7NC-3	1'-3"	1¼"	1½"	23°	10'-6"
30'-0"	12'-0"	23'-0"±		8"								
35'-0"	14'-0"			8 11/16"		13½"			1½"	1¾"	21°	
40'-0"	15'-0"			9⅜"							15°	13'-0"
45'-0"		23'-8"±		10¼"				1'-5"				

LUMINAIRE MAST ARM DATA

M PROJECTED LENGTH	N RISE	Min OD AT POLE	THICKNESS	P MOUNTING HEIGHT	
				30'-0" POLE	35'-0" POLE
6'-0"	2'-0"±	3¼"	0.1196"	31'-6"±	36'-6"±
8'-0"	2'-6"±	3½"		32'-0"±	37'-0"±
10'-0"	3'-3"±	3⅞"		32'-9"±	37'-9"±
12'-0"	4'-3"±			33'-9"±	38'-9"±
15'-0"	4'-9"±	4¼"		34'-3"±	39'-3"±

POLE TYPE	LOAD CASE	WIND VELOCITY (mph)	POLE DATA							BASE PLATE DATA				LUMINAIRE MAST ARM	SIGNAL MAST ARM	CIDH PILE FOUNDATION	
			A HEIGHT	Min OD BASE	Min OD TOP	THICKNESS	ALTERNATIVE SECTION B LENGTH	ALTERNATIVE SECTION BOTTOM	ALTERNATIVE SECTION TOP	C	BC = BOLT CIRCLE	THICKNESS	ANCHOR BOLT SIZE			Dia	DEPTH
18-4-100	4	100	17'-0"	16"	13 5/8"	0.2391" OR 0.25"				1'-11"	1'-9"	3"	2¼"ø x 42"	NONE	25'-0", [30'-0"]	3'-6"	12'-0"
19-4-100			30'-0"		11¾"		10'-0"	13⅛"	11¾"					6'-15' [12'-0"]			
19A-4-100			35'-0"		11"		15'-0'	13⅛"	11"					6'-15' [15'-0"]			
23-4-100			17'-0"		13⅝"									NONE	35'-0"		
24-4-100			30'-0"		11¾"	0.3125"	10'-0"	15⅛"	13¾"					6'-15' [12'-0"]			
24A-4-100			35'-0"		11"		15'-0"	13⅛"	11"					6'-15' [15'-0"]			
26-4-100			30'-0"	18"	13¾"		10'-0"	15⅛"	13¾"	2'-1"	1'-11"			6'-15' [12'-0"]	40'-0", [45'-0"]		13'-0"
26A-4-100			35'-0"		13"		15'-0"	15⅛"	13"					6'-15' [15'-0"]			
27-4-100			17'-0"		15⅝"									NONE			

[ ] INDICATES MAST ARM LENGTH TO BE USED UNLESS OTHERWISE NOTED ON PLANS.

STATE OF CALIFORNIA
DEPARTMENT OF TRANSPORTATION

NO SCALE

ELECTRICAL SYSTEMS (SIGNAL AND LIGHTING STANDARD, CASE 4 SIGNAL MAST ARM LOADING, WIND VELOCITY=100 MPH AND SIGNAL MAST ARM LENGTHS 25' TO 45')

RSP ES-7F DATED JULY 21, 2017 SUPERSEDES RSP ES-7F DATED JULY 15, 2016 AND STANDARD PLAN ES-7F DATED OCTOBER 30, 2015 - PAGE 461 OF THE STANDARD PLANS BOOK DATED 2015.

REVISED STANDARD PLAN RSP ES-7F

2015 REVISED STANDARD PLAN RSP ES-7F

4-7-17

© 2017 California Department of Transportation
All Rights Reserved

Dist	COUNTY	ROUTE	POST MILES TOTAL PROJECT	SHEET No.	TOTAL SHEETS
04	SCL	101,237	45.2/45.8, 2.7/3.3	653	736

REGISTERED CIVIL ENGINEER

Stanley P. Johnson
No. C57793
Exp. 3-31-18
CIVIL
STATE OF CALIFORNIA

July 21, 2017
PLANS APPROVAL DATE

THE STATE OF CALIFORNIA OR ITS OFFICERS OR AGENTS SHALL NOT BE RESPONSIBLE FOR THE ACCURACY OR COMPLETENESS OF SCANNED COPIES OF THIS PLAN SHEET.

TO ACCOMPANY PLANS DATED _____

NOTE:
Handhole shall be located on the downstream side of traffic.

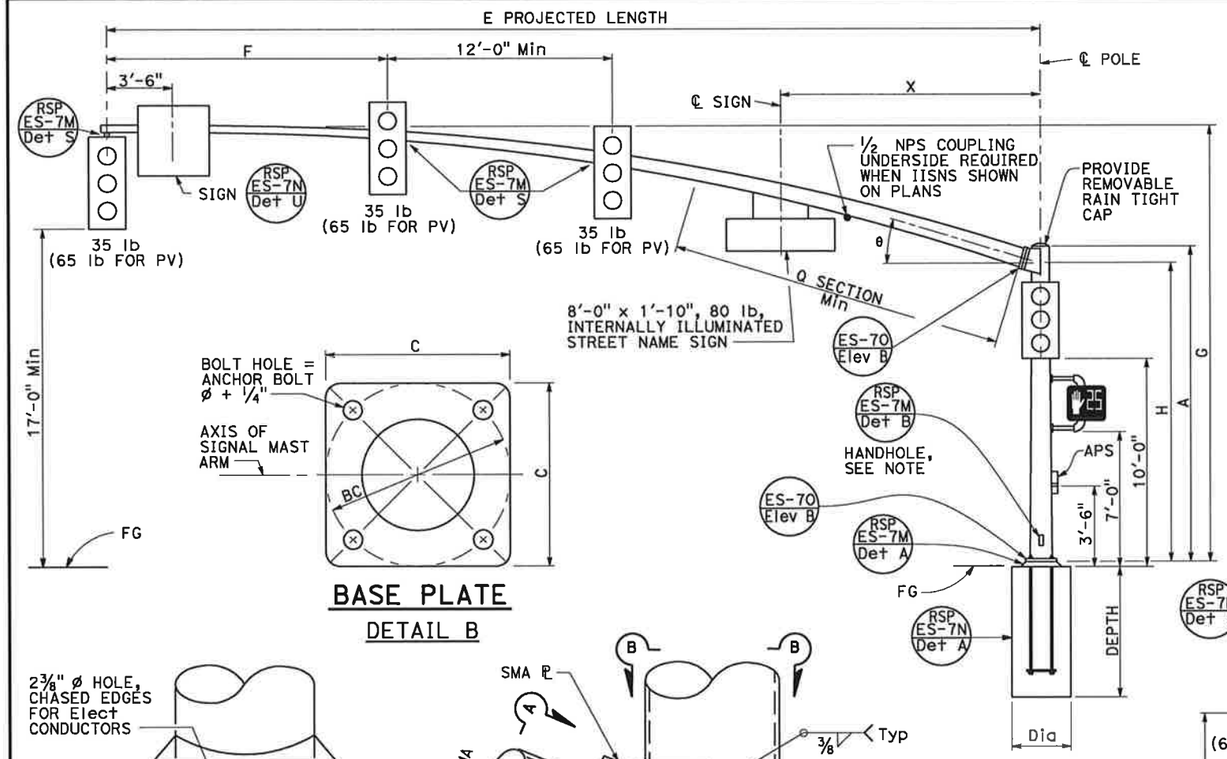

BASE PLATE
DETAIL B

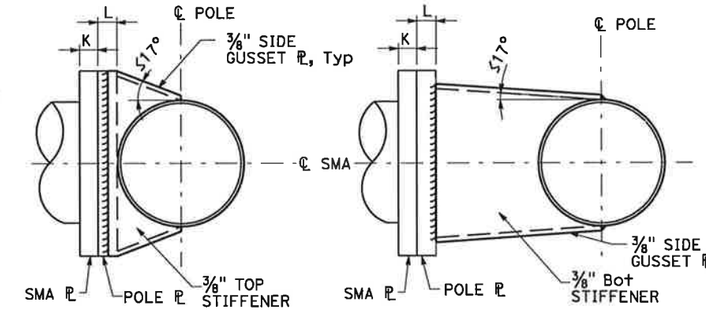

SECTION B-B

SECTION C-C

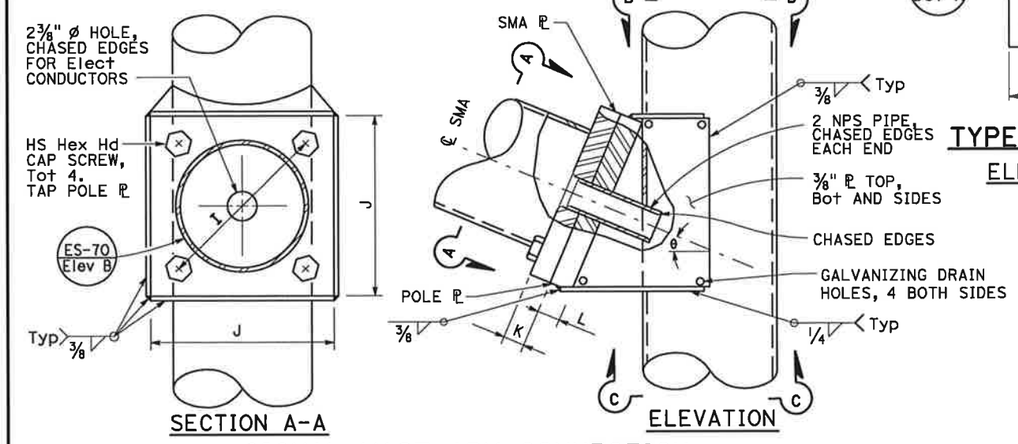

SECTION A-A

ELEVATION

SIGNAL MAST ARM CONNECTION
DETAIL A

TYPE 28-5-100
ELEVATION A

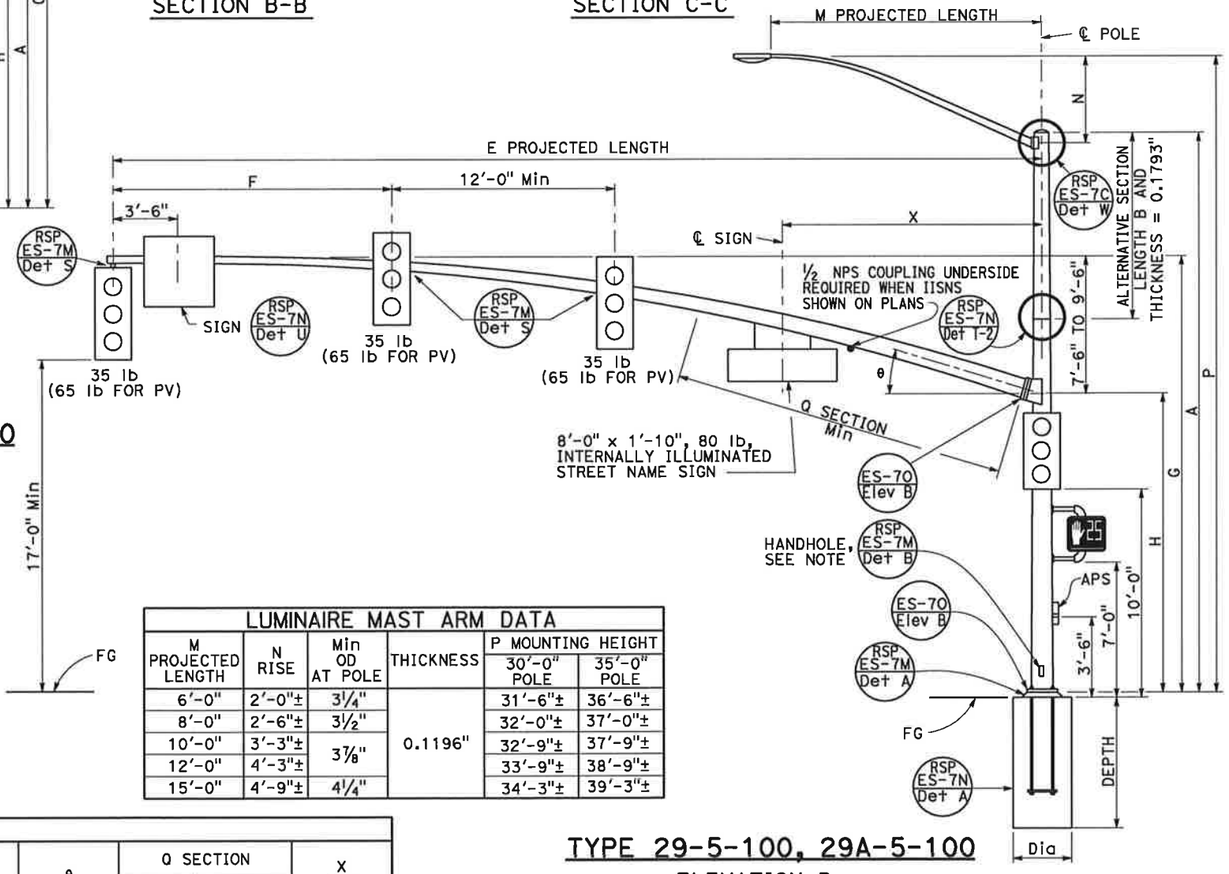

TYPE 29-5-100, 29A-5-100
ELEVATION B

LUMINAIRE MAST ARM DATA					
M PROJECTED LENGTH	N RISE	Min OD AT POLE	THICKNESS	P MOUNTING HEIGHT 30'-0" POLE	P MOUNTING HEIGHT 35'-0" POLE
6'-0"	2'-0"±	3¼"	0.1196"	31'-6"±	36'-6"±
8'-0"	2'-6"±	3½"		32'-0"±	37'-0"±
10'-0"	3'-3"±	3⅞"		32'-9"±	37'-9"±
12'-0"	4'-3"±			33'-9"±	38'-9"±
15'-0"	4'-9"±	4¼"		34'-3"±	39'-3"±

SIGNAL MAST ARM DATA														
E PROJECTED LENGTH	F Min SPACING	G MOUNTING HEIGHT	H	Min OD AT POLE	THICKNESS	I BOLT CIRCLE	HS CAP SCREWS	J PLATE SIZE	K MAST ARM PL THICKNESS	L POLE PL THICKNESS	θ	Q SECTION LENGTH	Q SECTION THICKNESS	X Max
50'-0"	15'-0"	23'-7"± TO 25'-7"±	16'-0"	11 7/16"	0.1793"	16"	1½"-6NC-3¼"	1'-9"	1¾"	1¾"	15°	18'-0"	0.2391"	14'-0"
55'-0"				1'-1¼"								23'-0"		

POLE DATA									BASE PLATE DATA						
POLE TYPE	LOAD CASE	WIND VELOCITY (mph)	A HEIGHT	Min OD BASE	Min OD TOP	THICKNESS	ALTERNATIVE SECTION B LENGTH	ALTERNATIVE SECTION BOTTOM	ALTERNATIVE SECTION TOP	C	BC = BOLT CIRCLE	THICKNESS	ANCHOR BOLT SIZE	LUMINAIRE MAST ARM	SIGNAL MAST ARM	CIDH PILE FOUNDATION Dia	CIDH PILE FOUNDATION DEPTH
28-5-100	5	100	17'-0"	22"	19 5/8"	0.375"				2'-6"	2'-4"	3"	2¼"ø x 42"	NONE	50'-0", [55'-0"]	4'-0"	14'-0"
29-5-100			30'-0"		17¾"		10'-0"	19⅛"	17¾"					6'-15' [15'-0"]			
29A-5-100			35'-0"		17"		15'-0"		17"								

[ ] INDICATES MAST ARM LENGTH TO BE USED UNLESS OTHERWISE NOTED ON PLANS.

STATE OF CALIFORNIA
DEPARTMENT OF TRANSPORTATION

ELECTRICAL SYSTEMS (SIGNAL AND LIGHTING STANDARD, CASE 5 SIGNAL MAST ARM LOADING, WIND VELOCITY=100 MPH AND SIGNAL MAST ARM LENGTHS 50' TO 55')

NO SCALE

RSP ES-7G DATED JULY 21, 2017 SUPERSEDES RSP ES-7G DATED JULY 15, 2016 AND STANDARD PLAN ES-7G DATED OCTOBER 30, 2015 - PAGE 462 OF THE STANDARD PLANS BOOK DATED 2015.

REVISED STANDARD PLAN RSP ES-7G

2015 REVISED STANDARD PLAN RSP ES-7G

4-7-17

© 2017 California Department of Transportation
All Rights Reserved

Dist	COUNTY	ROUTE	POST MILES TOTAL PROJECT	SHEET No.	TOTAL SHEETS
04	SCL	101,237	45.2/45.8, 2.7/3.3	654	736

REGISTERED CIVIL ENGINEER

July 21, 2017
PLANS APPROVAL DATE

Stanley P. Johnson
No. C57793
Exp. 3-31-18
CIVIL
STATE OF CALIFORNIA

THE STATE OF CALIFORNIA OR ITS OFFICERS OR AGENTS SHALL NOT BE RESPONSIBLE FOR THE ACCURACY OR COMPLETENESS OF SCANNED COPIES OF THIS PLAN SHEET.

TO ACCOMPANY PLANS DATED _____

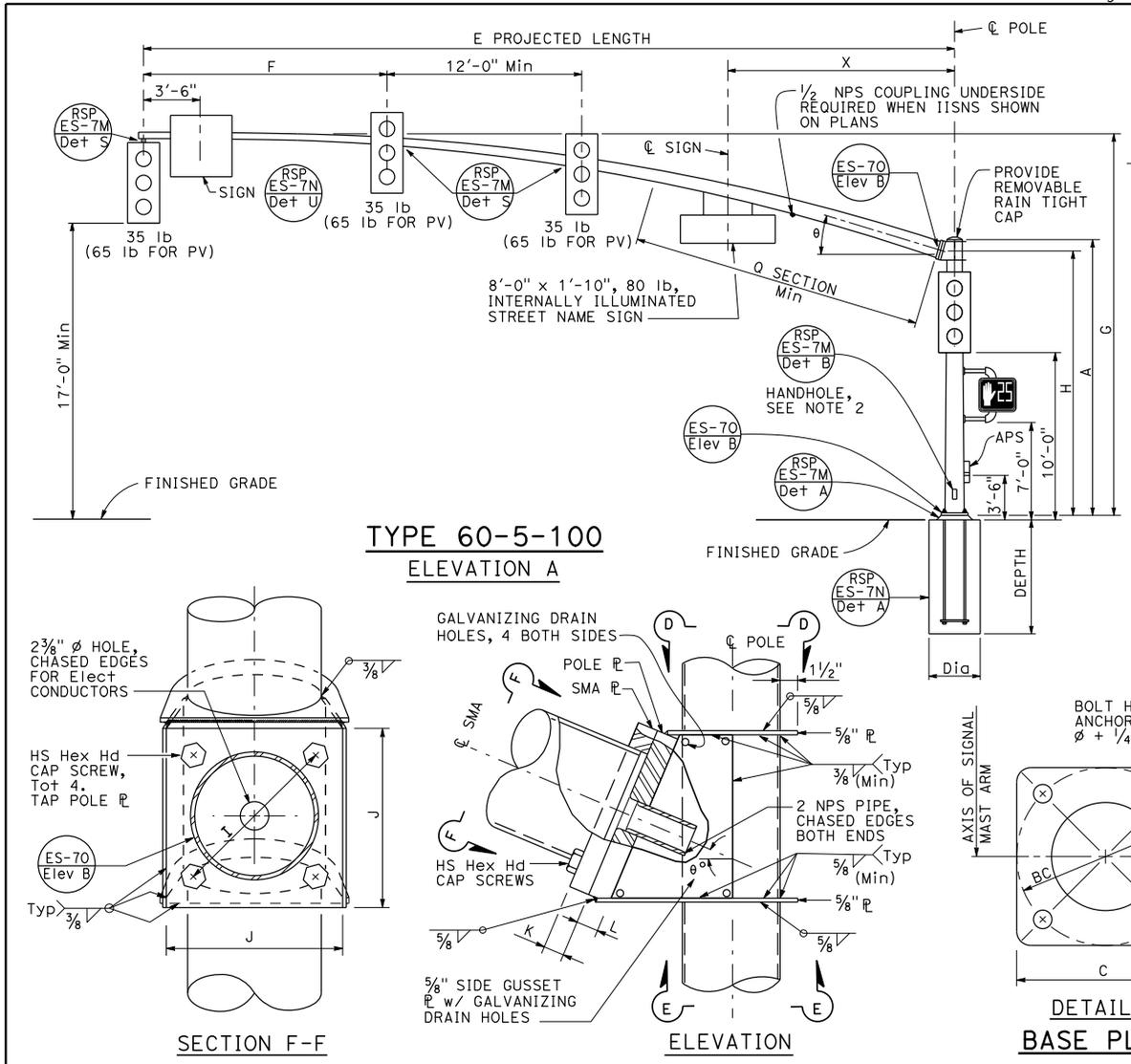

TYPE 60-5-100
ELEVATION A

SECTION F-F

ELEVATION

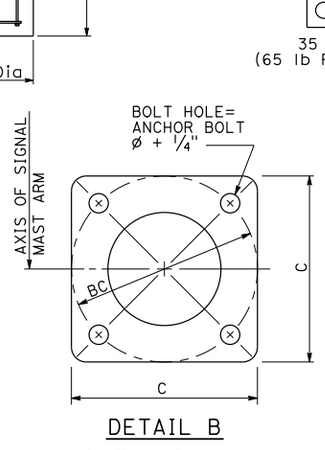

DETAIL B
BASE PLATE

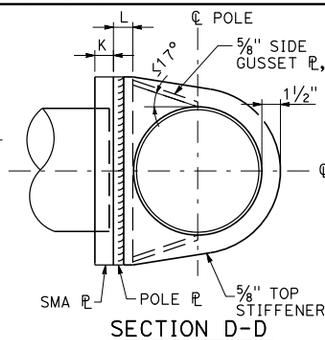

SECTION D-D

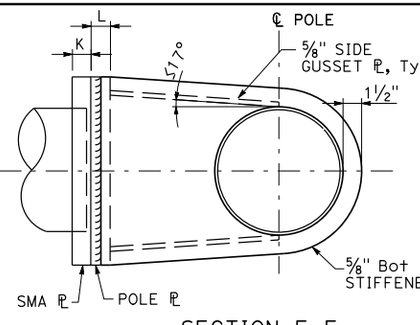

SECTION E-E

SIGNAL MAST ARM CONNECTION
DETAIL B

SIGNAL MAST ARM DATA

E PROJECTED LENGTH	F Min SPACING	G MOUNTING HEIGHT	H	Min OD AT POLE	THICKNESS	I BOLT CIRCLE	HS CAP SCREWS	J PLATE SIZE	K MAST ARM ℄ THICKNESS	L POLE ℄ THICKNESS	θ	Q SECTION LENGTH	Q SECTION THICKNESS	X Max
60'-0"	15'-0"	23'-7" TO 25'-7"	16'-0"	1'-1½"	0.1793"	20"	1½"-6NC-4"	2'-0"	2"	2"	15°	24'-0"	0.2391"	14'-0"
65'-0"					0.2391"							29'-0"	0.3125"	

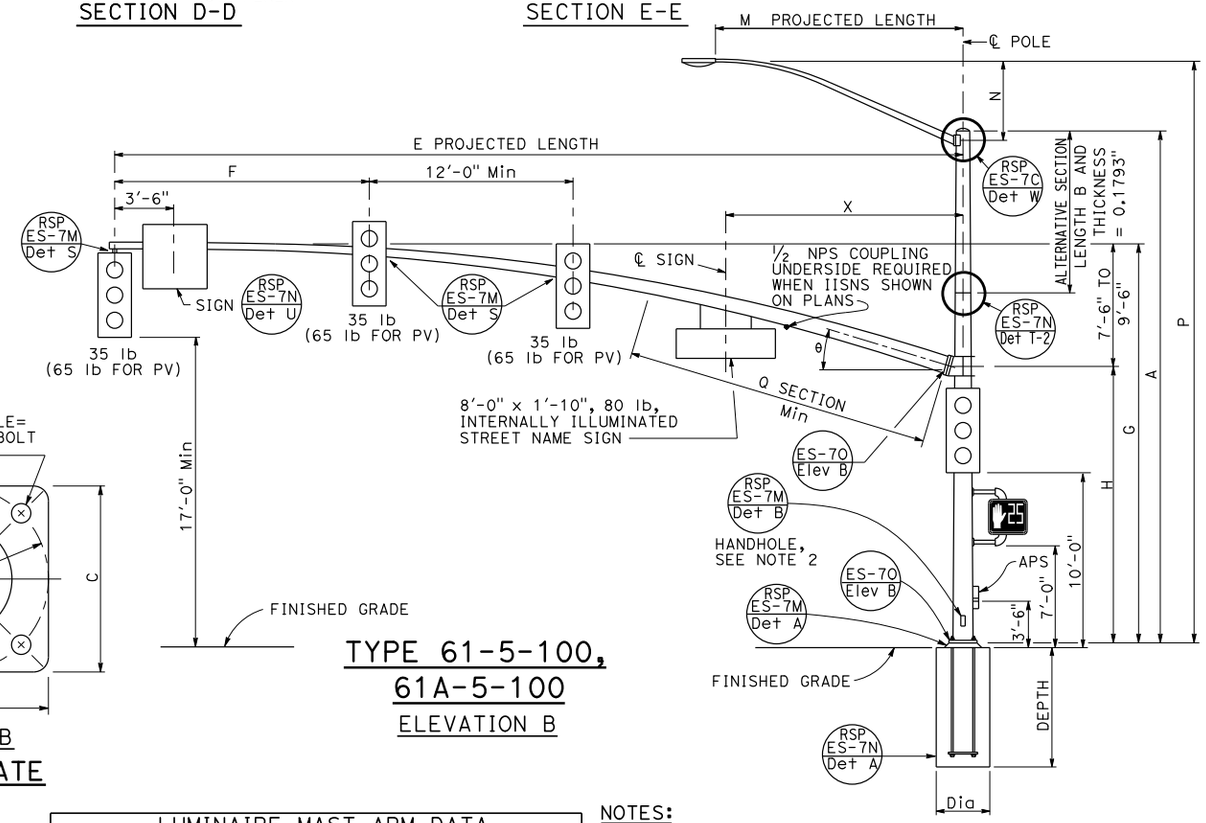

TYPE 61-5-100, 61A-5-100
ELEVATION B

LUMINAIRE MAST ARM DATA

M PROJECTED LENGTH	N RISE	Min OD AT POLE	THICKNESS	P MOUNTING HEIGHT 30'-0" POLE	P MOUNTING HEIGHT 35'-0" POLE
6'-0"	2'-0"±	3¼"	0.1196"	31'-6"±	36'-6"±
8'-0"	2'-6"±	3½"		32'-0"±	37'-0"±
10'-0"	3'-3"±	3⅞"		32'-9"±	37'-9"±
12'-0"	4'-3"±			33'-9"±	38'-9"±
15'-0"	4'-9"±	4¼"		34'-3"±	39'-3"±

NOTES:
1. The radial separation between the face of the pole and the adjacent insides of the top and bottom gusset plates shall not exceed 3/16". Fillet weld size to be increased by amount of gap.
2. Handhole shall be located on the downstream side of traffic.

POLE DATA / BASE PLATE DATA

POLE TYPE	LOAD CASE	WIND VELOCITY (mph)	POLE DATA A HEIGHT	Min OD BASE	Min OD TOP	THICKNESS	ALTERNATIVE SECTION B LENGTH	ALTERNATIVE SECTION BOTTOM	ALTERNATIVE SECTION TOP	BASE PLATE DATA C	BC = BOLT CIRCLE	THICKNESS	ANCHOR BOLT SIZE	LUMINAIRE MAST ARM	SIGNAL MAST ARM	CIDH PILE FOUNDATION Dia	CIDH PILE FOUNDATION DEPTH
60-5-100	5	100	17'-0"	22"	19⅝"	0.375"				2'-6"	2'-4"	3"	2¼"ø x 42"	NONE	60'-0", [65'-0"]	4'-0"	14'-0"
61-5-100			30'-0"	25"	20¾"		10'-0"	22⅛"	20¾"	2'-11"	2'-9"		3"ø x 60"	6'-15' [15'-0"]		4'-6"	15'-0"
61A-5-100			35'-0"		20"		15'-0"		20"								

[ ] INDICATES MAST ARM LENGTH TO BE USED UNLESS OTHERWISE NOTED ON PLANS.

STATE OF CALIFORNIA
DEPARTMENT OF TRANSPORTATION

ELECTRICAL SYSTEMS (SIGNAL AND LIGHTING STANDARD, CASE 5 SIGNAL MAST ARM LOADING, WIND VELOCITY=100 MPH AND SIGNAL MAST ARM LENGTHS 60' TO 65')

NO SCALE

RSP ES-7H DATED JULY 21, 2017 SUPERSEDES RSP ES-7H DATED JANUARY 20, 2017 AND RSP ES-7H DATED JULY 15, 2016 AND STANDARD PLAN ES-7H DATED OCTOBER 30, 2015 - PAGE 463 OF THE STANDARD PLANS BOOK DATED 2015.

REVISED STANDARD PLAN RSP ES-7H

2015 REVISED STANDARD PLAN RSP ES-7H

4-25-17

© 2017 California Department of Transportation
All Rights Reserved

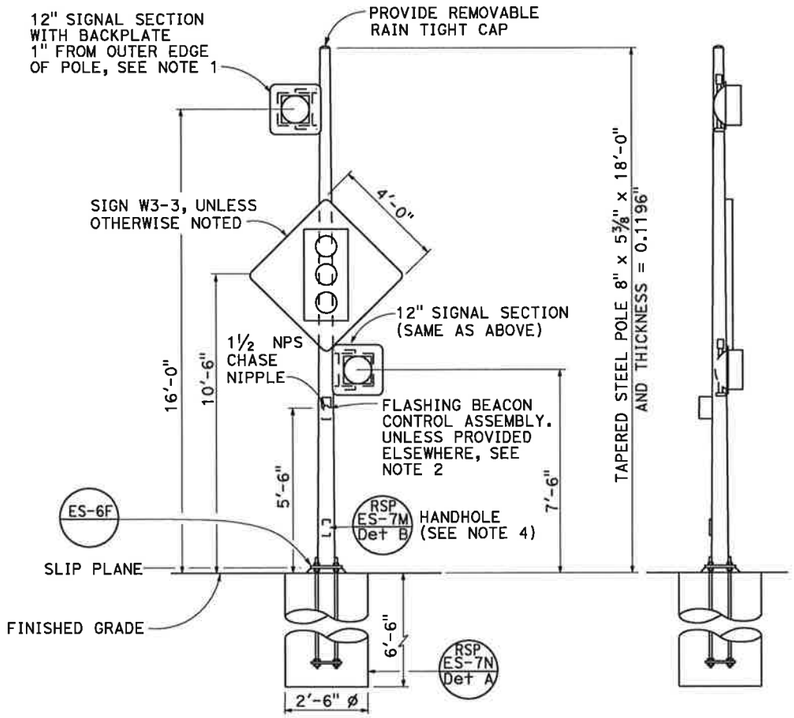

FRONT VIEW

SIDE VIEW

TYPE 15-FBS
FLASHING BEACON WITH SLIP BASE INSTALLATION
DETAIL A

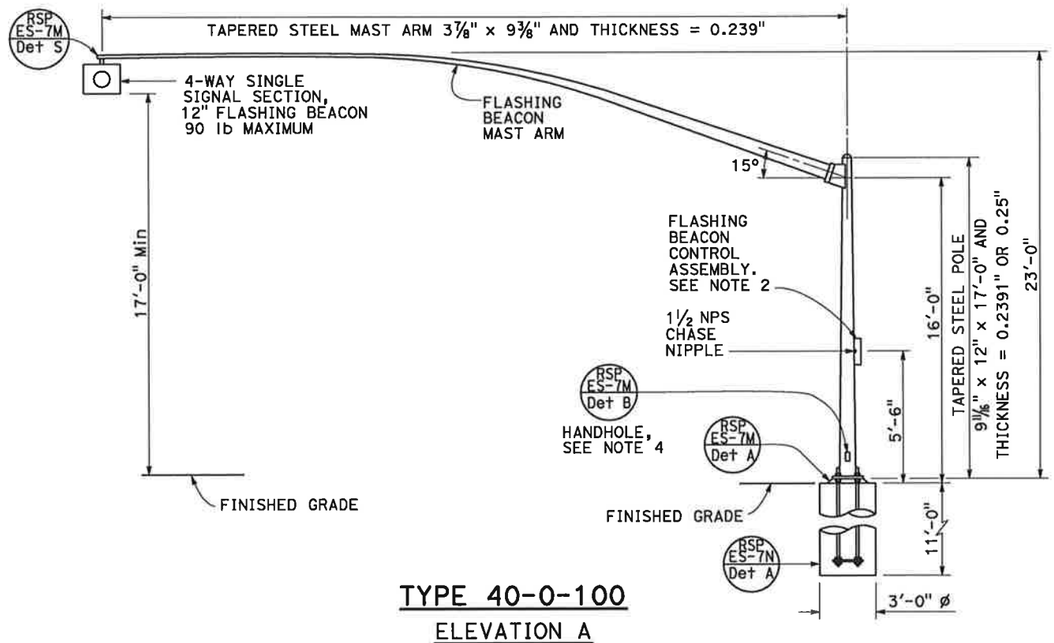

TYPE 40-0-100
ELEVATION A

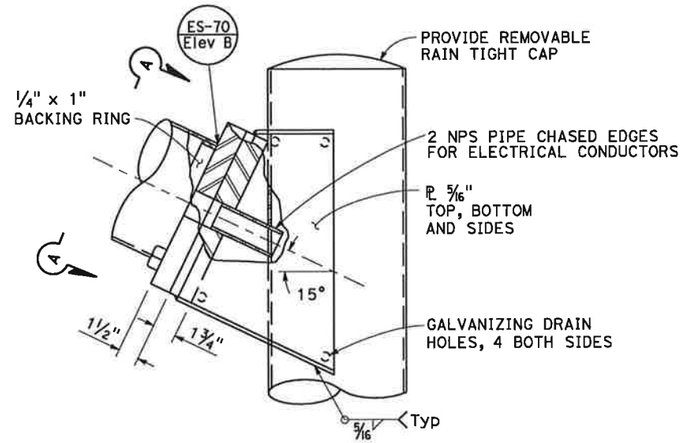

ELEVATION B

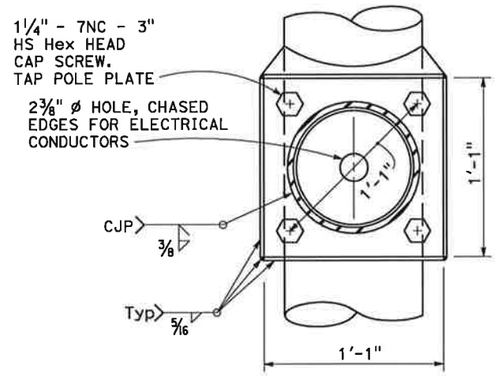

VIEW A-A

FLASHING BEACON MAST ARM CONNECTION DETAIL
DETAIL B

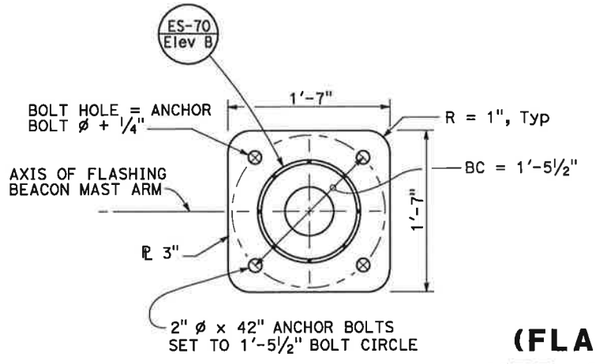

BASE PLATE
DETAIL C

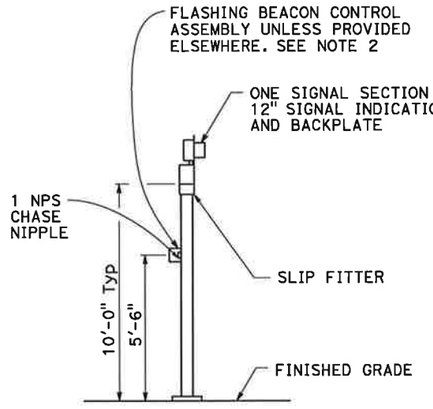

TYPE 1-A, 1-B, 1-C, AND 1-D
FLASHING BEACON INSTALLATION
DETAIL D
See Note 5

Dist	COUNTY	ROUTE	POST MILES TOTAL PROJECT	SHEET No.	TOTAL SHEETS
04	SCL	101,237	45.2/45.8, 2.7/3.3	655	736

REGISTERED CIVIL ENGINEER

Stanley P. Johnson
No. C57793
Exp. 3-31-18
CIVIL
STATE OF CALIFORNIA

July 21, 2017
PLANS APPROVAL DATE

THE STATE OF CALIFORNIA OR ITS OFFICERS OR AGENTS SHALL NOT BE RESPONSIBLE FOR THE ACCURACY OR COMPLETENESS OF SCANNED COPIES OF THIS PLAN SHEET.

TO ACCOMPANY PLANS DATED _____

NOTES:

1. See Standard Plans ES-4A and ES-4D for attachment fitting details.
2. For wiring diagram, see Revised Standard Plan RSP ES-14B.
3. For additional notes and details, see Revised Standard Plans RSP ES-7M and RSP ES-7N.
4. Handhole shall be located on the downstream side of traffic.
5. See project plans for type of standard to be installed.

STATE OF CALIFORNIA
DEPARTMENT OF TRANSPORTATION

ELECTRICAL SYSTEMS (FLASHING BEACON ON A TYPE 1, TYPE 15-FBS, AND TYPE 40 STANDARD)

NO SCALE

RSP ES-7J DATED JULY 21, 2017 SUPERSEDES RSP ES-7J DATED JULY 15, 2016 AND RSP ES-7J DATED APRIL 15, 2016 AND STANDARD PLAN ES-7J DATED OCTOBER 30, 2015 - PAGE 464 OF THE STANDARD PLANS BOOK DATED 2015.

REVISED STANDARD PLAN RSP ES-7J

2015 REVISED STANDARD PLAN RSP ES-7J

4-7-17

© 2016 California Department of Transportation
All Rights Reserved

Dist	COUNTY	ROUTE	POST MILES TOTAL PROJECT	SHEET No.	TOTAL SHEETS
04	SCL	101,237	45.2/45.8, 2.7/3.3	656	736

REGISTERED CIVIL ENGINEER

July 15, 2016
PLANS APPROVAL DATE

Registered Professional Engineer — Stanley P. Johnson — No. C57793 — Exp. 3-31-18 — CIVIL — State of California

THE STATE OF CALIFORNIA OR ITS OFFICERS OR AGENTS SHALL NOT BE RESPONSIBLE FOR THE ACCURACY OR COMPLETENESS OF SCANNED COPIES OF THIS PLAN SHEET.

TO ACCOMPANY PLANS DATED _____

4" x 6½" ROUNDED RECTANGLE HANDHOLE REINFORCED WITH RING WELDED TO OUTSIDE OF POLE. SEE NOTE 4, ⅛" COVER PLATE

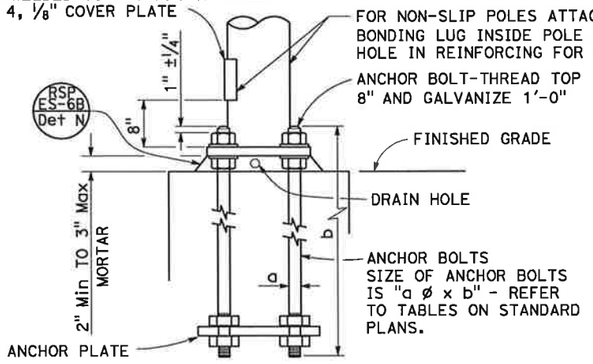

HANDHOLE AND ANCHORAGE
DETAIL A

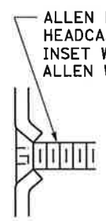

TYPICAL DETAIL
DETAIL B-1

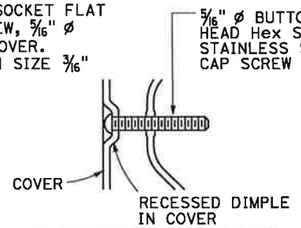

ALTERNATIVE DETAIL
DETAIL B-2

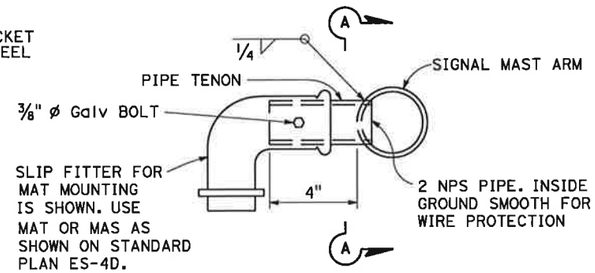

SIDE TENON
DETAIL S-1

IDENTIFICATION NUMBER

1. Attach a stamped metal tag with pole's identification number above the handhole. ¼" high number, minimum.
2. Attach a stamped metal tag with mast arm's identification number to the bottom of the signal mast arm near the pole plate. ¼" high number, minimum.

Type — Load case (Use SL for special load case) — Design wind velocity (mph) — Signal mast arm length (ft) (Near handhole: Maximum signal mast arm length for pole type / Near pole plate: Installed signal mast arm length) — Standard plan year — Only for poles or mast arms using Detail F — Only for poles or mast arms using RSP ES-7O

26A - 3 - 100 - 45 - 10 - F or FB

SAMPLE IDENTIFICATION NUMBER

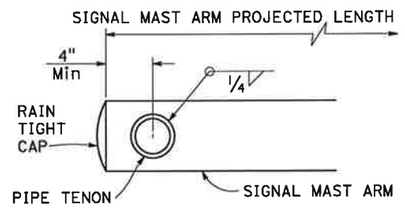

SECTION A-A

PIPE TENONS
DETAIL S

WELD SIZE	WALL THICKNESS
3/16"	0.1196"
¼"	0.1793"
5/16"	0.2391"
⅜"	0.3125"
7/16"	0.375"

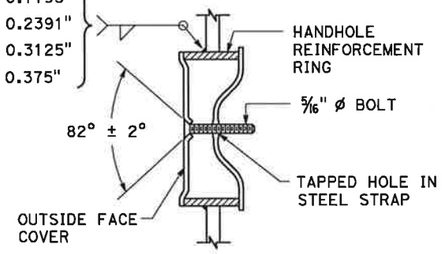

TAMPER RESISTANT HANDHOLE COVER
DETAIL B

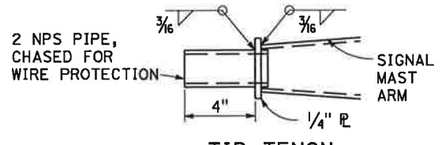

TIP TENON
DETAIL TL

This detail supersedes Detail S when so designated

WELD SIZE	WALL THICKNESS
⅛"	0.1196"
3/16"	0.1793"
¼"	0.2391"

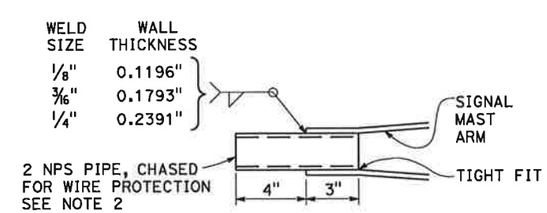

TIP TENON
DETAIL TS

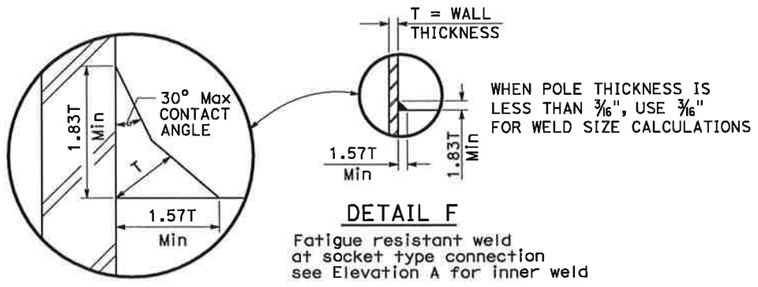

DETAIL F

Fatigue resistant weld at socket type connection see Elevation A for inner weld

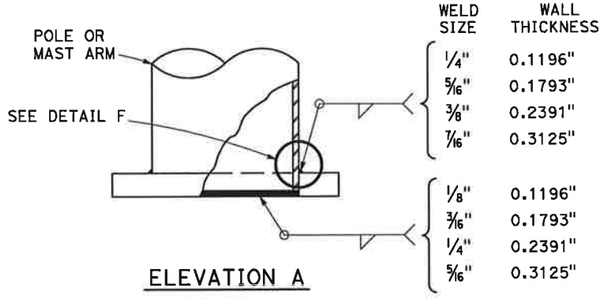

WELD SIZE	WALL THICKNESS
¼"	0.1196"
5/16"	0.1793"
⅜"	0.2391"
7/16"	0.3125"
⅛"	0.1196"
3/16"	0.1793"
¼"	0.2391"
5/16"	0.3125"

ELEVATION A

NOTES:

1. Provide a Hex nut, leveling nut and 2 washers for each bolt.
2. Luminaire mast arms shall be round, tapered steel tubes, taper of 0.1375" to 0.143-inch per foot with an end section 2⅜" OD for mounting hardware. Extensions of 2 NPS Standard pipe and 7" long may be used at the option of the manufacturer. When low pressure sodium luminaires are required, the extension shall be 1'-3".
3. Signal mast arms shall be round, tapered steel tubes, maximum taper 0.143-inch per foot.
4. Handhole reinforcement ring shall be ¼" x 2" for 0.1196" to 0.2391" thick poles, ⅜" x 2" for 0.3125" to 0.375" thick poles.
5. Handholes shall be located on the downstream side of traffic.
6. Detail F, fatigue resistant weld, is required at socket welded signal mast arm plate and pole base plate.
7. Cap screws shall be tightened by the turn-of-nut method ⅓ turn from a snug tight condition. No washer will be required.
8. Outside diameter, wall thickness, and corresponding section properties of poles and mast arms as shown in the Standard Plans are minimums. Unless otherwise specified, alternative sections shall require approval by the Engineer.
9. Design: AASHTO Standard Specifications for Structural Support for Highway Signs, Luminaires, and Traffic Signals, 6th Edition. Basic Wind Speed = 100 mph (3 seconds gust). Yearly Mean Wind Velocity = 15.6 mph.
10. Materials (Structural steel):
    fy = 55,000 psi (tapered steel tube and anchor bolts)
    fy = 50,000 psi (unless otherwise noted)
11. Materials (Reinforced concrete):
    f'c = 3,625 psi
    fy = 60,000 psi

STATE OF CALIFORNIA
DEPARTMENT OF TRANSPORTATION

ELECTRICAL SYSTEMS (SIGNAL AND LIGHTING STANDARD, DETAIL No. 1)

NO SCALE

RSP ES-7M DATED JULY 15, 2016 SUPERSEDES STANDARD PLAN ES-7M DATED OCTOBER 30, 2015 - PAGE 467 OF THE STANDARD PLANS BOOK DATED 2015.

REVISED STANDARD PLAN RSP ES-7M

2015 REVISED STANDARD PLAN RSP ES-7M

6-20-16

© 2016 California Department of Transportation
All Rights Reserved

Dist	COUNTY	ROUTE	POST MILES TOTAL PROJECT	SHEET No.	TOTAL SHEETS
04	SCL	101,237	45.2/45.8, 2.7/3.3	657	736

REGISTERED CIVIL ENGINEER

July 15, 2016
PLANS APPROVAL DATE

REGISTERED PROFESSIONAL ENGINEER — Stanley P. Johnson — No. C57793 — Exp. 3-31-18 — CIVIL — STATE OF CALIFORNIA

THE STATE OF CALIFORNIA OR ITS OFFICERS OR AGENTS SHALL NOT BE RESPONSIBLE FOR THE ACCURACY OR COMPLETENESS OF SCANNED COPIES OF THIS PLAN SHEET.

TO ACCOMPANY PLANS DATED _____

2015 REVISED STANDARD PLAN RSP ES-7N

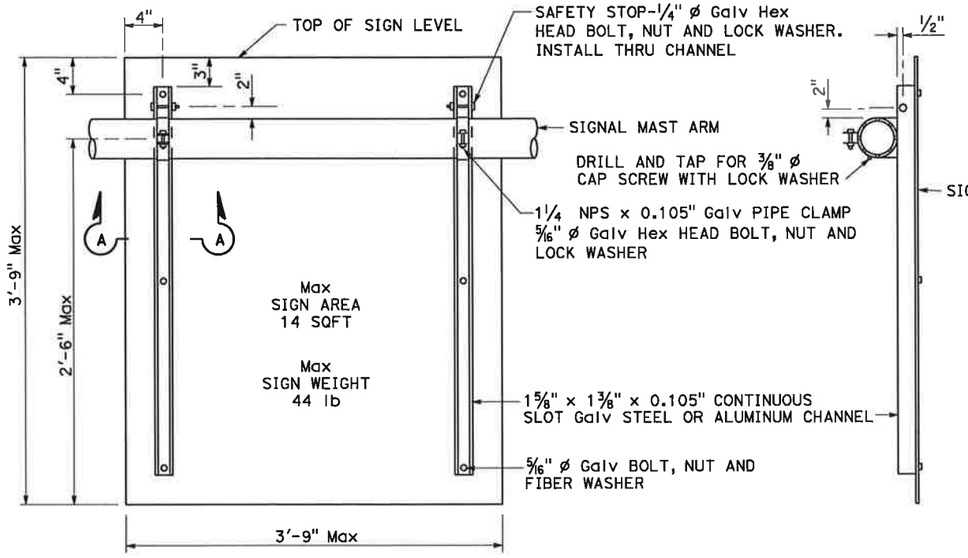

REAR VIEW

SIDE VIEW

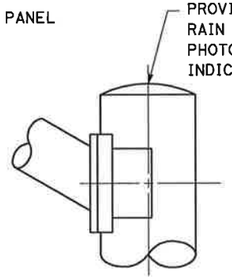

STANDARD TOP
DETAIL B-1

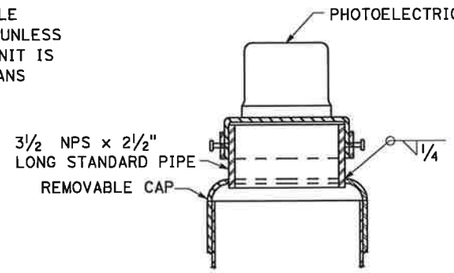

MOUNTING ADAPTER FOR
PHOTOELECTRIC UNIT
DETAIL B-2

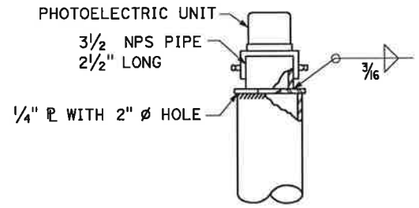

ALTERNATIVE
MOUNTING ADAPTER
DETAIL B-3

POLE TOP DETAILS
DETAIL B

SIGN MOUNTING DETAILS
DETAIL U

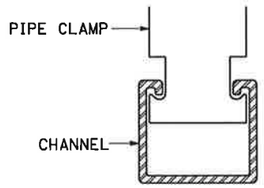

SECTION A-A

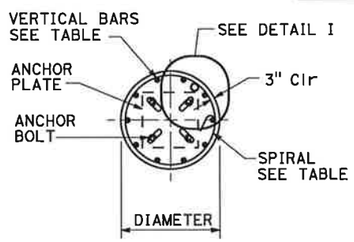

SECTION B-B

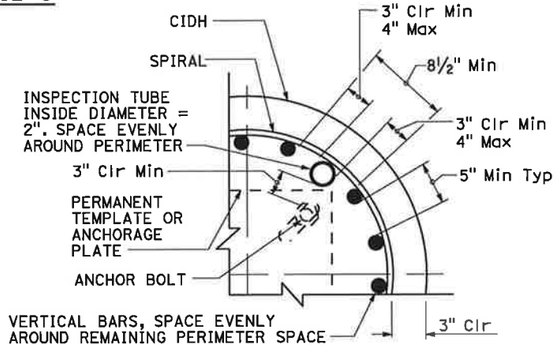

INSPECTION TUBE PLACEMENT
DETAIL I

CIDH REINFORCING AND INSPECTION TUBE SCHEDULE

CIDH DIAMETER	VERTICAL BARS	SPIRAL	INSPECTION TUBE
2 ft	8-#5	#4 AT 6	2
2.5 ft	10-#6		4*
3 ft	12-#7	#5 AT 6	
3.5 ft	14-#8		4
4 ft	18-#9	2-#4 AT 7	5
4.5 ft	18-#9	2-#5 AT 7	5
5 ft	22-#10	2-#5 AT 7	6
6 ft	26-#11	2-#6 AT 7	7

* FOR SLIP BASE VERSIONS WITH 3 ANCHOR BOLTS USE 3 INSPECTION TUBES.

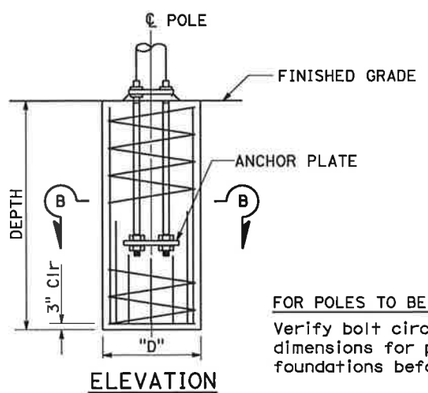

ELEVATION

FOR POLES TO BE INSTALLED ON EXISTING FOUNDATION:
Verify bolt circles, anchor bolt sizes and dependent dimensions for poles to be installed on existing foundations before fabricating the poles.

CAST-IN-DRILLED-HOLE PILE FOUNDATION,
REINFORCED PILE
DETAIL A

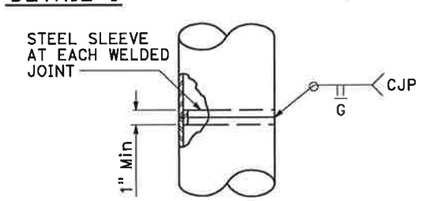

FOR UNIFORM TUBE THICKNESS
DETAIL T-1

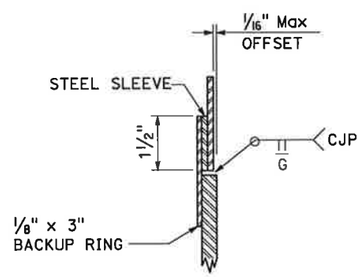

AT TUBE THICKNESS CHANGE
DETAIL T-2

POLE SPLICES
DETAIL T

DETAIL C-1

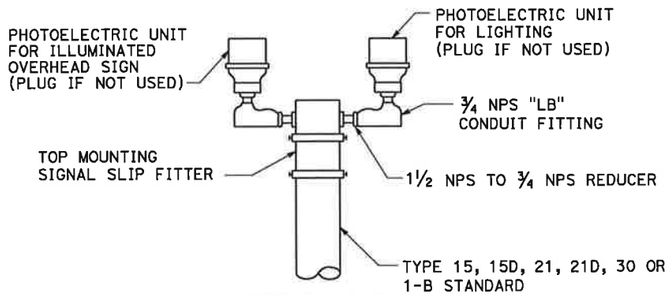

DETAIL C-2

DUAL PHOTOELECTRIC UNIT MOUNTING DETAIL
DETAIL C

STATE OF CALIFORNIA
DEPARTMENT OF TRANSPORTATION

ELECTRICAL SYSTEMS (SIGNAL AND LIGHTING STANDARD, DETAIL No. 2)

NO SCALE

RSP ES-7N DATED JULY 15, 2016 SUPERSEDES STANDARD PLAN ES-7N DATED OCTOBER 30, 2015 - PAGE 468 OF THE STANDARD PLANS BOOK DATED 2015.

REVISED STANDARD PLAN RSP ES-7N

6-20-16

© 2016 California Department of Transportation
All Rights Reserved

Dist	COUNTY	ROUTE	POST MILES TOTAL PROJECT	SHEET No.	TOTAL SHEETS
04	SCL	101,237	45.2/45.8, 2.7/3.3	658	736

Theresa Gabriel
REGISTERED ELECTRICAL ENGINEER

Theresa Aziz Gabriel No. E15129 Exp. 6-30-16 ELECTRICAL — REGISTERED PROFESSIONAL ENGINEER — STATE OF CALIFORNIA

April 15, 2016
PLANS APPROVAL DATE

THE STATE OF CALIFORNIA OR ITS OFFICERS OR AGENTS SHALL NOT BE RESPONSIBLE FOR THE ACCURACY OR COMPLETENESS OF SCANNED COPIES OF THIS PLAN SHEET.

TO ACCOMPANY PLANS DATED _____

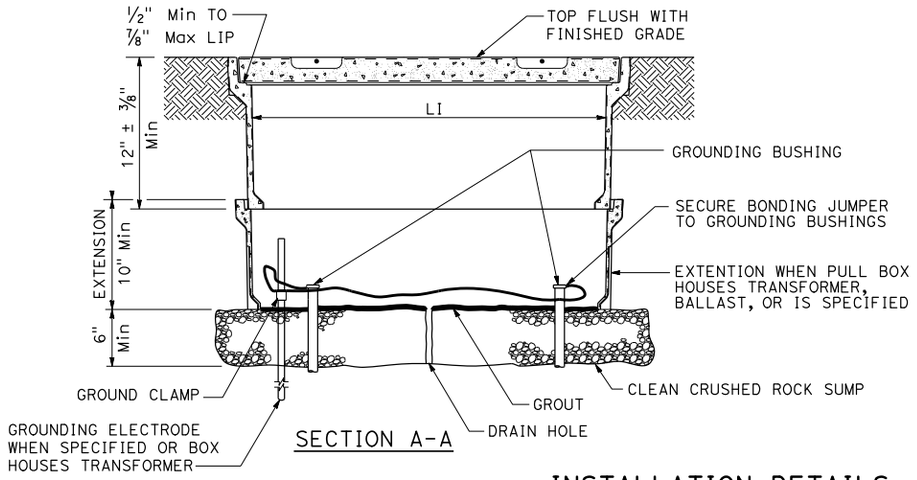

SECTION A-A

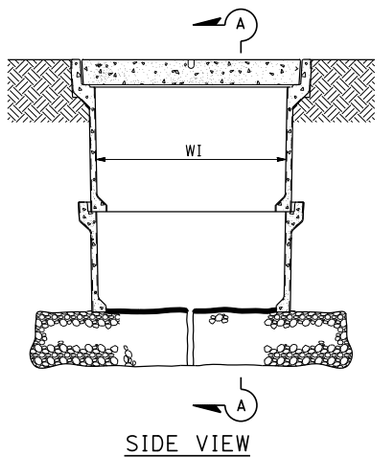

SIDE VIEW

INSTALLATION DETAILS

DETAIL A

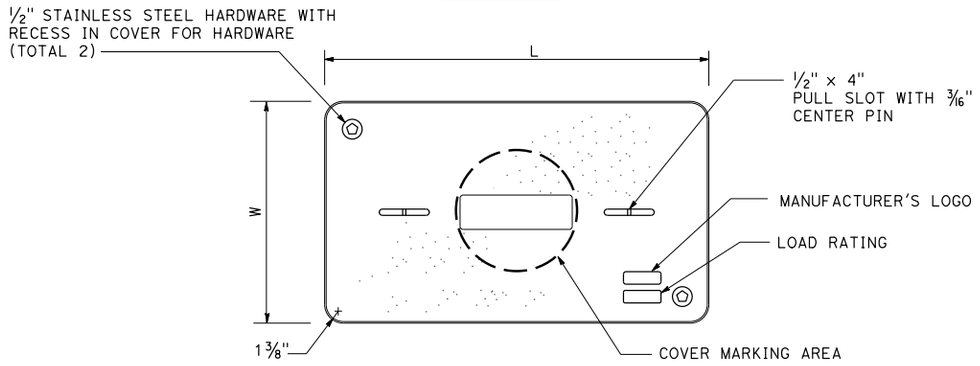

COVER TOP VIEW

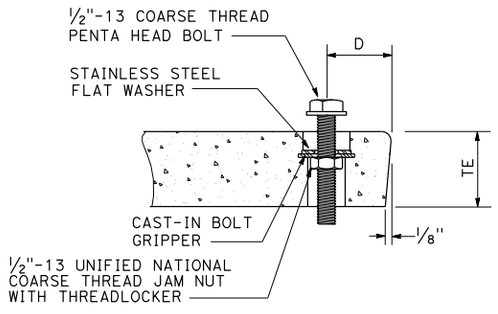

TYPICAL COVER CAPTIVE BOLT
OR SIMILAR

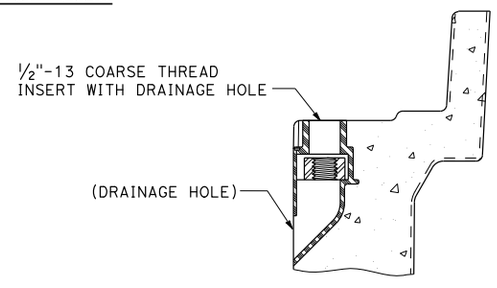

TYPICAL THREADED INSERT
OR SIMILAR

NOTES:

1. The nominal dimensions of the opening in which the cover sets shall be the same as the cover dimensions except the length and width dimensions shall be ⅛" greater.
2. Covers and boxes shall be interchangeable with California standard male and female gages. When interchanged with a standard male or female gage, the top surfaces shall be flush within ⅛". Top outside radius of covers and pull boxes shall have a ⅛" radius.
3. Dimensions for the cover for non-traffic pull box are nominal values.

DIMENSION TABLE

PULL BOX	PULL BOX					COVER				
	MINIMUM DEPTH BOX	MINIMUM DEPTH EXTENSION	MINIMUM WEIGHT	LI Min	WI Min	TE	D	L	W	MINIMUM WEIGHT
No. 3½	12"	N/A	40 lb	1′ - 3"	9"	1¾"	1¾"	1′-3¼" - 1′-3⅜"	10" - 10⅛"	30 lb
No. 5	12"	10"	55 lb	1′ - 8"	11"	2"	1¾"	1′-11¼"	1′-1¾"	60 lb
No. 6	12"	10"	70 lb	2′ - 4¼"	1′ - 3¼"	2"	2"	2′-6½"	1′-5½"	85 lb

STATE OF CALIFORNIA
DEPARTMENT OF TRANSPORTATION

ELECTRICAL SYSTEMS (NON-TRAFFIC PULL BOX)

NO SCALE

RSP ES-8A DATED APRIL 15, 2016 SUPERSEDES STANDARD PLAN ES-8A
DATED OCTOBER 30, 2015 - PAGE 473 OF THE STANDARD PLANS BOOK DATED 2015.

REVISED STANDARD PLAN RSP ES-8A

2015 REVISED STANDARD PLAN RSP ES-8A

1-22-16

© 2017 California Department of Transportation
All Rights Reserved

Dist	COUNTY	ROUTE	POST MILES TOTAL PROJECT	SHEET No.	TOTAL SHEETS
04	SCL	101,237	45.2/45.8, 2.7/3.3	659	736

H.R.Z
REGISTERED ELECTRICAL ENGINEER

Hamid Zolfaghari
No. E15636
Exp. 12-31-17
ELECTRICAL
REGISTERED PROFESSIONAL ENGINEER
STATE OF CALIFORNIA

July 21, 2017
PLANS APPROVAL DATE

THE STATE OF CALIFORNIA OR ITS OFFICERS OR AGENTS SHALL NOT BE RESPONSIBLE FOR THE ACCURACY OR COMPLETENESS OF SCANNED COPIES OF THIS PLAN SHEET.

TO ACCOMPANY PLANS DATED _____

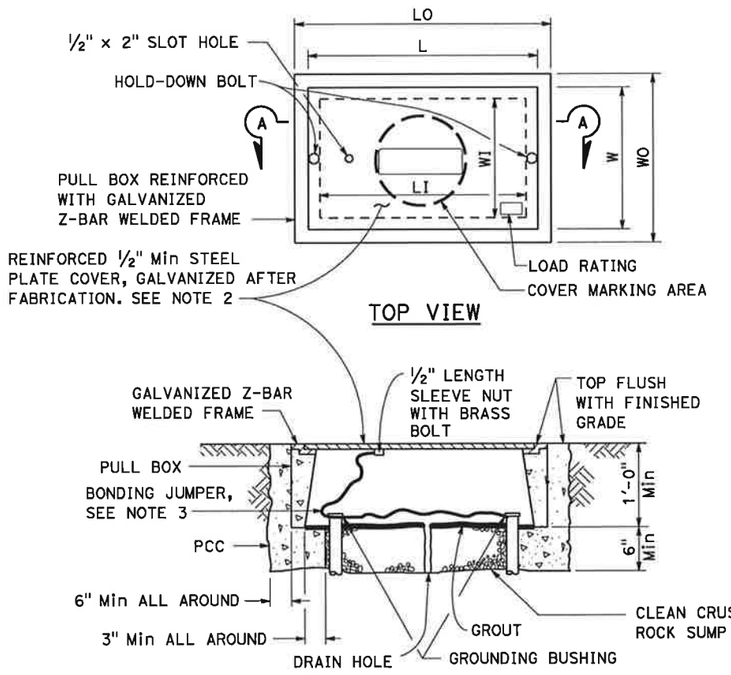

No. 3½(T), No. 5(T) AND No. 6(T) TRAFFIC PULL BOX

NOTES:

1. Traffic pull box shall be provided with steel cover and special concrete footing. Steel cover shall have embossed non-skid pattern.
2. Steel reinforcing shall be as regularly used in the standard products of the respective manufacturer.
3. Bonding jumper for metal covers shall be 3' long, minimum.
4. The nominal dimensions of the opening in which the cover sets shall be the same as the cover dimensions except the length and width dimensions shall be ⅛" greater.
5. Covers and boxes shall be interchangeable with California standard male and female gages. When interchanged with a standard male or female gage, the top surfaces shall be flush within ⅛".

DIMENSION TABLE

PULL BOX	PULL BOX						COVER	
	MINIMUM * THICKNESS	MINIMUM DEPTH BOX AND EXTENSION	LO	LI	WO	WI	L **	W **
No. 3½(T)	1½"	1'-0"	1'-10" - 1'-11"	1'-5" - 1'-6½"	1'-3" - 1'-4"	10" - 1'-0"	1'-8" - 1'-8½"	1'-1" - 1'-2"
No. 5(T)	1¾"	1'-0"	2'-5" - 2'-6"	2'-0" - 2'-1"	1'-6" - 1'-7"	1'-1" - 1'-2"	2'-3" - 2'-3½"	1'-4" - 1'-4½"
No. 6(T)	2"	1'-0"	2'-11" - 3'-1"	2'-6" - 2'-7"	1'-10" - 2'-0"	1'-5" - 1'-6"	2'-9" - 2'-9½"	1'-8" - 1'-8½"

* EXCLUDING CONDUIT WEB ** TOP DIMENSION

STATE OF CALIFORNIA
DEPARTMENT OF TRANSPORTATION

ELECTRICAL SYSTEMS (TRAFFIC PULL BOX)

NO SCALE

RSP ES-8B DATED JULY 21, 2017 SUPERSEDES RSP ES-8B DATED APRIL 15, 2016 AND STANDARD PLAN ES-8B DATED OCTOBER 30, 2015 - PAGE 474 OF THE STANDARD PLANS BOOK DATED 2015.

REVISED STANDARD PLAN RSP ES-8B

2015 REVISED STANDARD PLAN RSP ES-8B

4-25-17

© 2016 California Department of Transportation
All Rights Reserved

Dist	COUNTY	ROUTE	POST MILES TOTAL PROJECT	SHEET No.	TOTAL SHEETS
04	SCL	101,237	45.2/45.8, 2.7/3.3	660	736

Theresa Gabriel
REGISTERED ELECTRICAL ENGINEER

April 15, 2016
PLANS APPROVAL DATE

Theresa Aziz Gabriel No. E15129 Exp. 6-30-16 ELECTRICAL — REGISTERED PROFESSIONAL ENGINEER — STATE OF CALIFORNIA

THE STATE OF CALIFORNIA OR ITS OFFICERS OR AGENTS SHALL NOT BE RESPONSIBLE FOR THE ACCURACY OR COMPLETENESS OF SCANNED COPIES OF THIS PLAN SHEET.

TO ACCOMPANY PLANS DATED _____

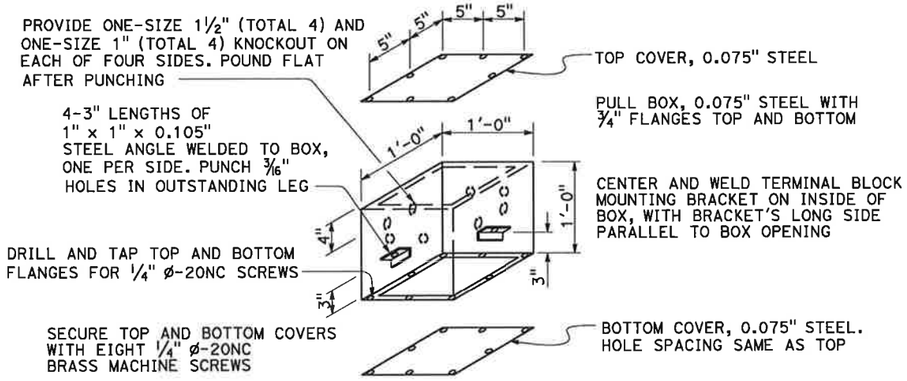

No. 7 PULL BOX (CEILING)

See Note 6

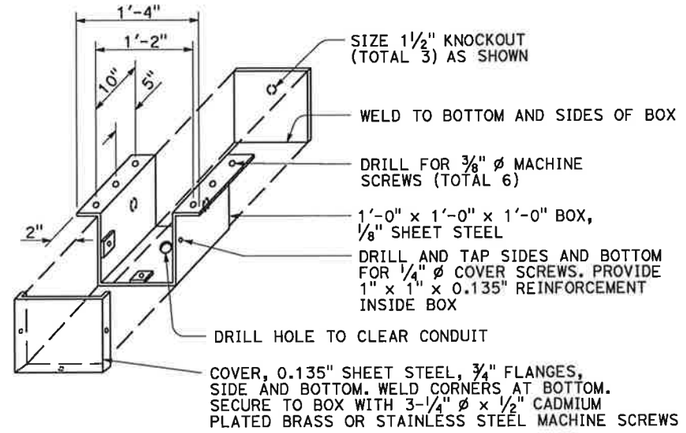

No. 8 PULL BOX

NOTES:

1. Corner joints shall be lapped and secured by spot welding or riveting.
2. Where cap screws are used to attach cover to box, either of the following methods of providing adequate threading may be used:
   a. Tack weld stainless steel Hex nut to bottom of flange (total 4)
   b. Tack weld a ¼" x ⅝" x 8" bar beneath flange (total 2)
3. Pound knockouts flat after punching.
4. Multiple size knockouts (concentric) shall not be permitted.
5. Pull box covers shall be marked as specified.
6. Installation of No. 7 pull box:
   a) Install with bottom flange flush with concrete.
   b) Both covers shall be on a box during pouring.
7. Install box parallel to top of railing. Cover box during pouring with ¼" plywood of sufficient size to provide 1:1 chamfer on 3 sides of cover. Upper edge of plywood shall fit against lower edge of rain tight hood.

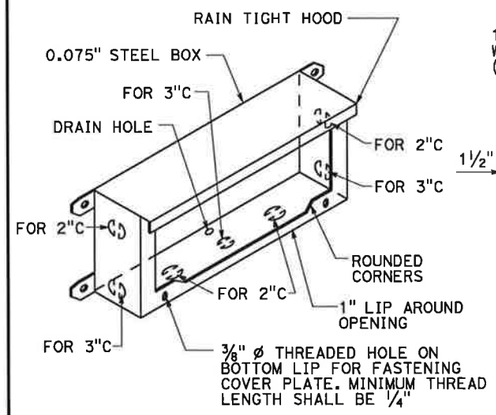

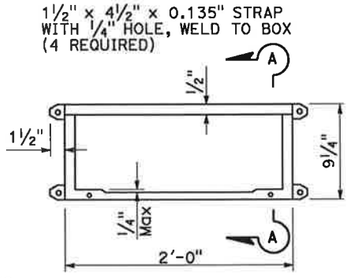

PLAN

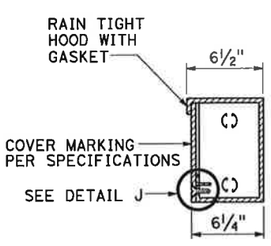

SECTION A-A

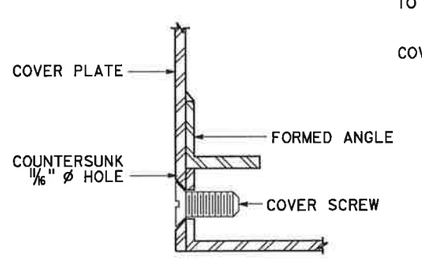

DETAIL J

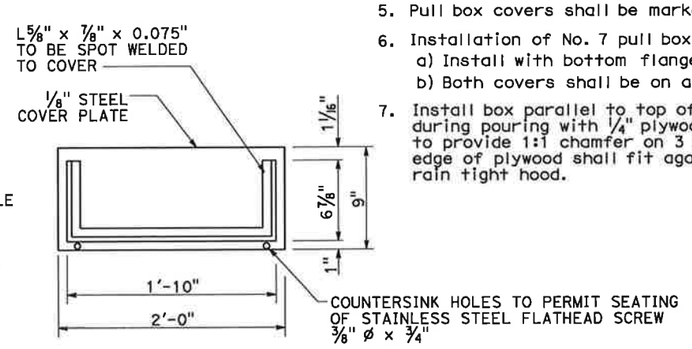

COVER DETAIL

No. 9 PULL BOX (STRUCTURE)

See Note 7

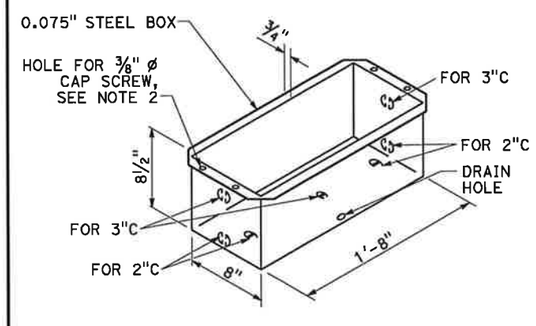

PLAN

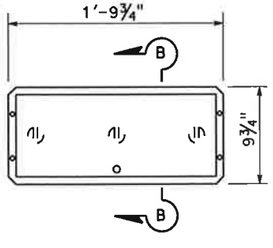

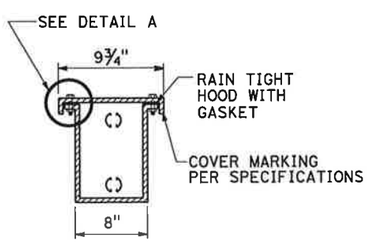

SECTION B-B

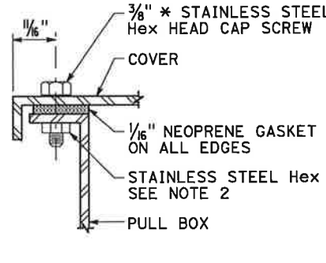

DETAIL A

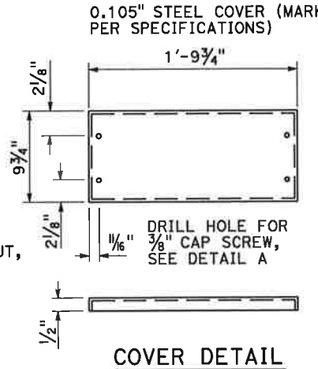

COVER DETAIL

No. 9A PULL BOX (STRUCTURE)

STATE OF CALIFORNIA
DEPARTMENT OF TRANSPORTATION

ELECTRICAL SYSTEMS (STRUCTURE PULL BOX)

NO SCALE

RSP ES-9C DATED APRIL 15, 2016 SUPERSEDES STANDARD PLAN ES-9C DATED DATED OCTOBER 30, 2015 - PAGE 477 OF THE STANDARD PLANS BOOK DATED 2015.

REVISED STANDARD PLAN RSP ES-9C

2015 REVISED STANDARD PLAN RSP ES-9C

1-12-16

© 2017 California Department of Transportation
All Rights Reserved

Dist	COUNTY	ROUTE	POST MILES TOTAL PROJECT	SHEET No.	TOTAL SHEETS
04	SCL	101,237	45.2/45.8, 2.7/3.3	661	736

H.R. [signature]
REGISTERED ELECTRICAL ENGINEER

Hamid Zolfaghari
No. E15636
Exp. 12-31-17
ELECTRICAL
REGISTERED PROFESSIONAL ENGINEER
STATE OF CALIFORNIA

July 21, 2017
PLANS APPROVAL DATE

THE STATE OF CALIFORNIA OR ITS OFFICERS OR AGENTS SHALL NOT BE RESPONSIBLE FOR THE ACCURACY OR COMPLETENESS OF SCANNED COPIES OF THIS PLAN SHEET.

TO ACCOMPANY PLANS DATED _____

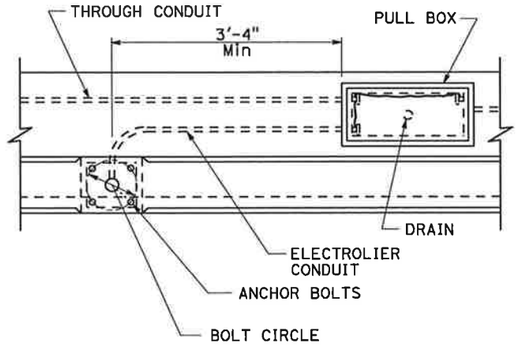

TOP VIEW

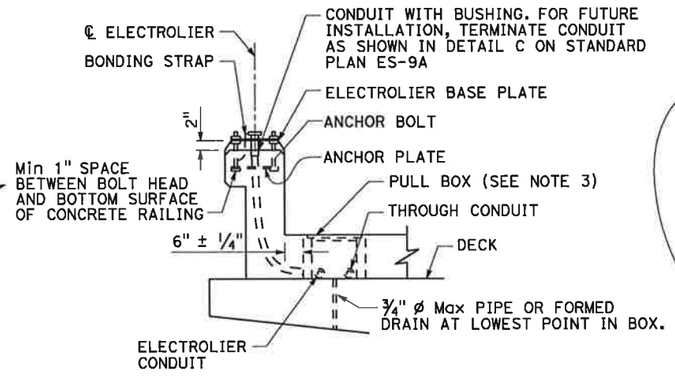

END VIEW

No. 3½, 5, OR 6 PULL BOX INSTALLATION

DETAIL A

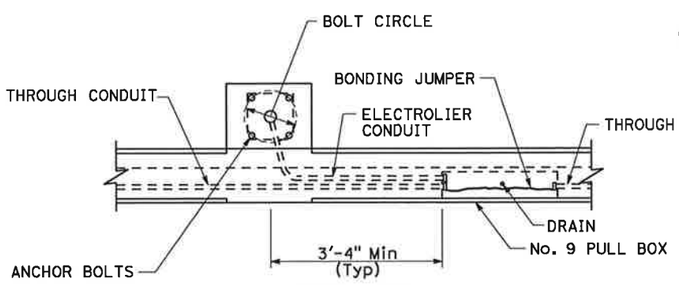

TOP VIEW

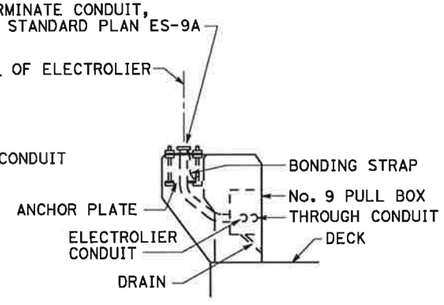

END VIEW

No. 9 PULL BOX INSTALLATION

DETAIL B

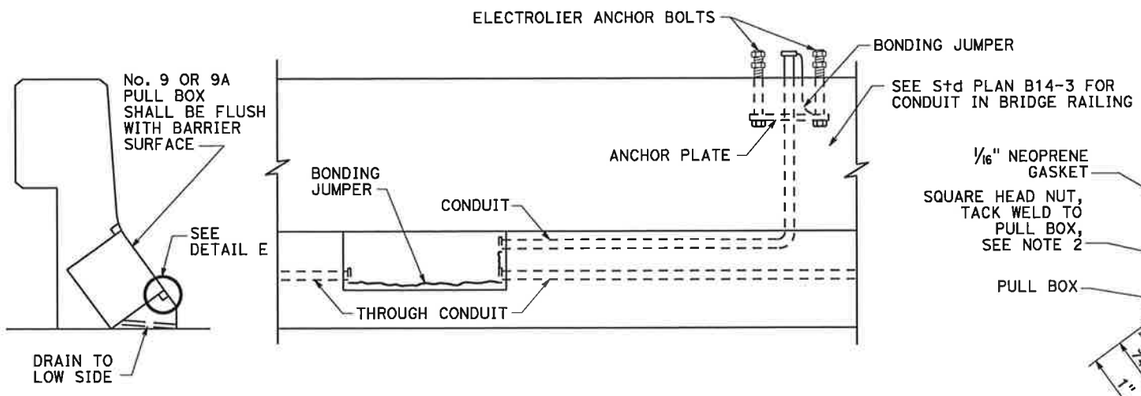

INSTALLATION IN SLOPING PARAPETS

DETAIL D

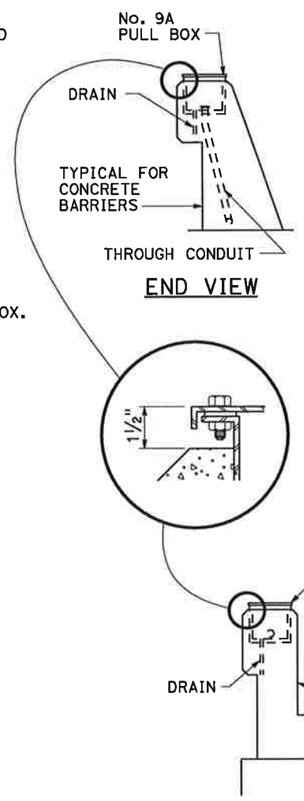

END VIEW

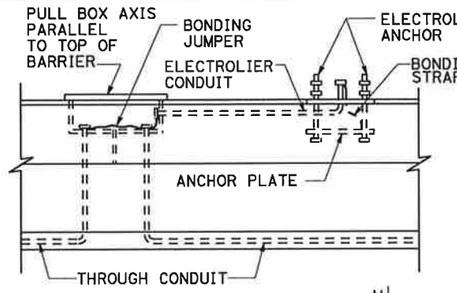

SIDE VIEW

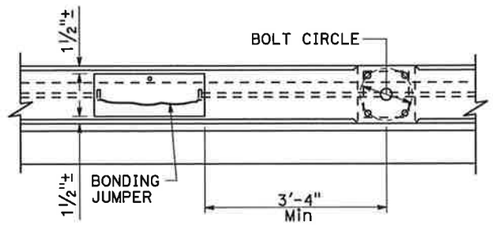

TOP VIEW

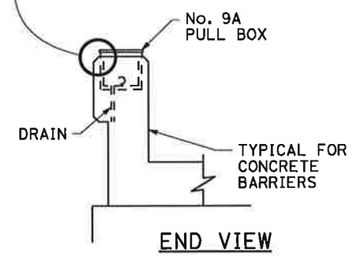

END VIEW

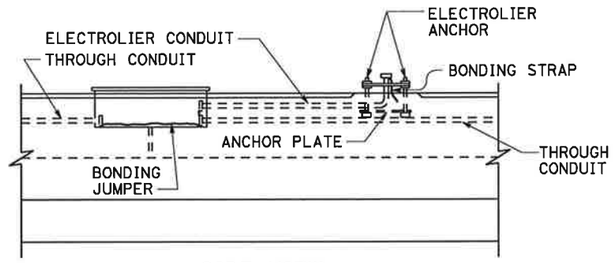

SIDE VIEW

No. 9A PULL BOX INSTALLATION

DETAIL C

NOTES:

1. Axis of pull box shall be parallel to top of barrier, sidewalk or railing.
2. See railing sheet for reinforcement and structural details at electroliers and pull boxes.
3. Top of pull boxes in sidewalk areas shall be flush with sidewalk. Modify base of pull box as required.
4. Boxes inside of vertical barrier or railing shall be closed during pouring of PCC with ¼" plywood of sufficient size to provide 1:1 chamfer on 3 sides of cover. Upper edge of plywood shall fit against lower edge of raintight hood.
5. Use drain in center if box is horizontal, or at low end if box is inclined. When box is mounted in sloping parapet ½" elongated drain hole inside at center or near end as required for drainage.
6. For electrolier anchorage bolts and grouting details, see Revised Standard Plan RSP ES-6B.
7. See Standard Plan B14-3 for conduit in concrete barrier.

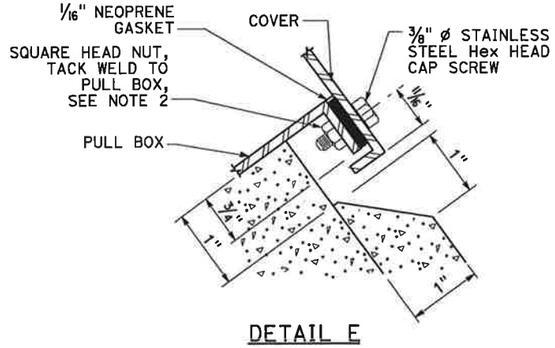

DETAIL E

STATE OF CALIFORNIA
DEPARTMENT OF TRANSPORTATION

ELECTRICAL SYSTEMS (STRUCTURE PULL BOX INSTALLATIONS)

NO SCALE

RSP ES-9D DATED JULY 21, 2017 SUPERSEDES RSP ES-9D DATED APRIL 15, 2016 AND STANDARD PLAN ES-9D DATED OCTOBER 30, 2015 - PAGE 478 OF THE STANDARD PLANS BOOK DATED 2015.

REVISED STANDARD PLAN RSP ES-9D

2015 REVISED STANDARD PLAN RSP ES-9D

4-7-17

© 2018 California Department of Transportation
All Rights Reserved

Dist	COUNTY	ROUTE	POST MILES TOTAL PROJECT	SHEET No.	TOTAL SHEETS
04	SCL	101,237	45.2/45.8, 2.7/3.3	662	736

H.R.Z
REGISTERED ELECTRICAL ENGINEER

Hamid Zolfaghari
No. E15636
Exp. 12-31-19
ELECTRICAL
REGISTERED PROFESSIONAL ENGINEER
STATE OF CALIFORNIA

April 20, 2018
PLANS APPROVAL DATE

THE STATE OF CALIFORNIA OR ITS OFFICERS OR AGENTS SHALL NOT BE RESPONSIBLE FOR THE ACCURACY OR COMPLETENESS OF SCANNED COPIES OF THIS PLAN SHEET.

TO ACCOMPANY PLANS DATED _____

NOTE:
Curves represent the minimum maintained illuminance (FC).

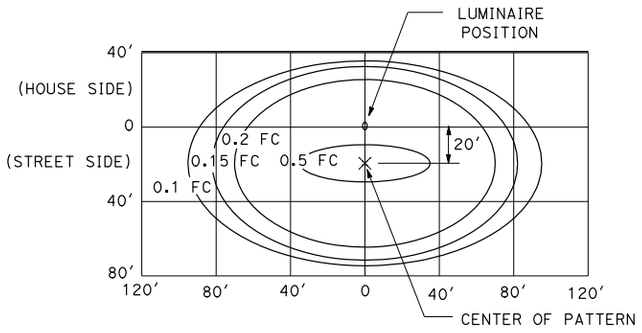

ROADWAY 1
34′ Mounting Height
165 W (Max)

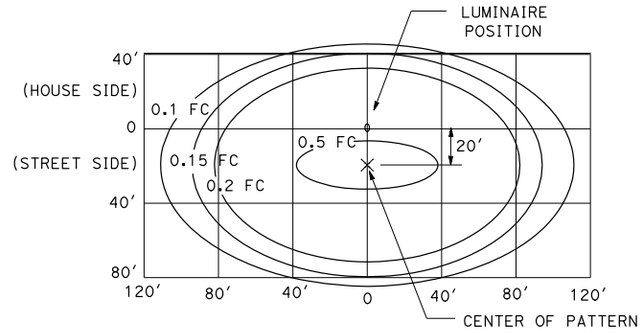

ROADWAY 2
40′ Mounting Height
235 W (Max)

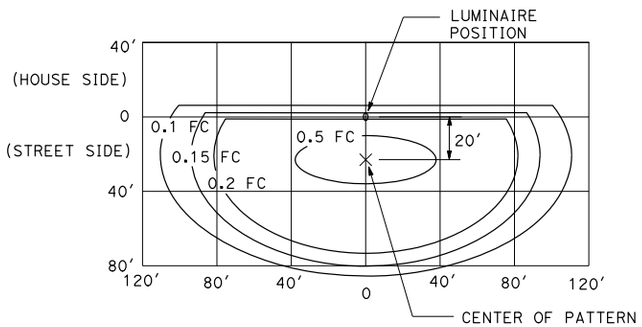

ROADWAY 3
40′ Mounting Height
with back side control
235 W (Max)

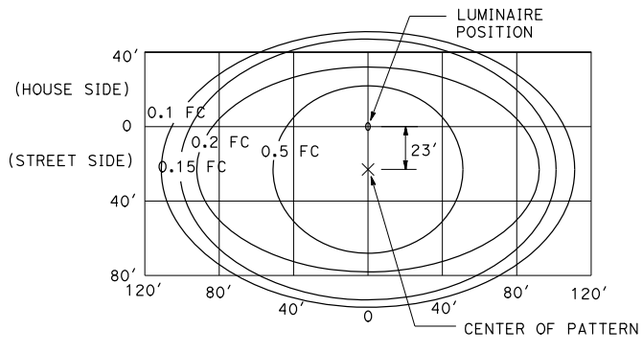

ROADWAY 4
40′ Mounting Height
300 W (Max)

STATE OF CALIFORNIA
DEPARTMENT OF TRANSPORTATION

ELECTRICAL SYSTEMS (ISOFOOTCANDLE CURVES)

NO SCALE

RSP ES-10A DATED APRIL 20, 2018 SUPERSEDES RSP ES-10A DATED JULY 21, 2017 AND STANDARD PLAN ES-10A DATED OCTOBER 30, 2015 - PAGE 481 OF THE STANDARD PLANS BOOK DATED 2015.

REVISED STANDARD PLAN RSP ES-10A

2015 REVISED STANDARD PLAN RSP ES-10A

11-15-17

© 2018 California Department of Transportation
All Rights Reserved

Dist	COUNTY	ROUTE	POST MILES TOTAL PROJECT	SHEET No.	TOTAL SHEETS
04	SCL	101,237	45.2/45.8, 2.7/3.3	663	736

H. R. Z
REGISTERED ELECTRICAL ENGINEER

Hamid Zolfaghari
No. E15636
Exp. 12-31-19
ELECTRICAL
REGISTERED PROFESSIONAL ENGINEER
STATE OF CALIFORNIA

April 20, 2018
PLANS APPROVAL DATE

THE STATE OF CALIFORNIA OR ITS OFFICERS OR AGENTS SHALL NOT BE RESPONSIBLE FOR THE ACCURACY OR COMPLETENESS OF SCANNED COPIES OF THIS PLAN SHEET.

TO ACCOMPANY PLANS DATED _____

NOTE:
Curves represent the minimum maintained illuminance (FC).

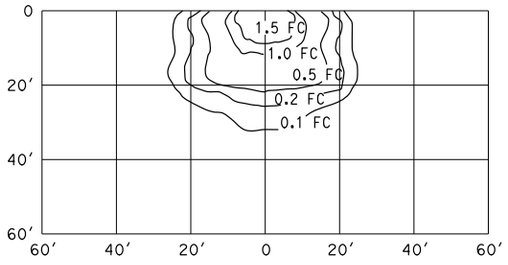

WALL-MOUNTED
15′ Mounting Height
ANSI Designation S62
Lamp operated at 5,800 lm
70 W (Max)

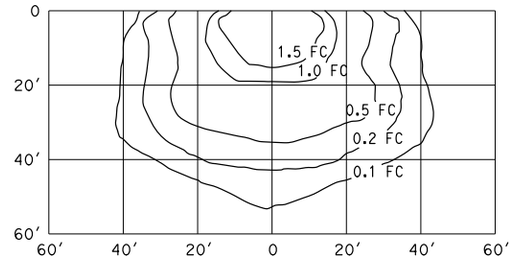

WALL-MOUNTED
15′ Mounting Height
ANSI Designation S54
Lamp operated at 9,500 lm
100 W (Max)

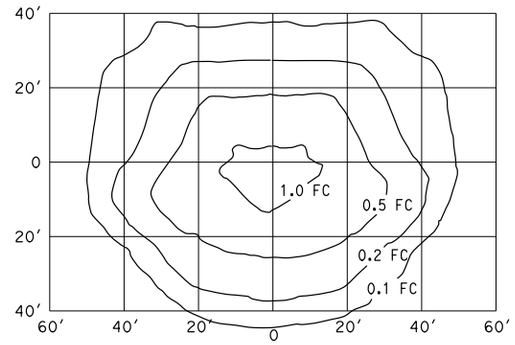

FLUSH-MOUNTED SOFFIT
17′ Mounting Height
ANSI Designation S62
Lamp operated at 5,800 lm
70 W (Max)

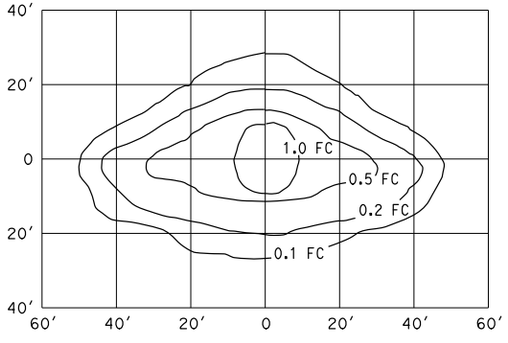

PENDANT SOFFIT
TYPE III SHORT
17′ Mounting Height
ANSI Designation S62
Lamp operated at 5,800 lm
70 W (Max)

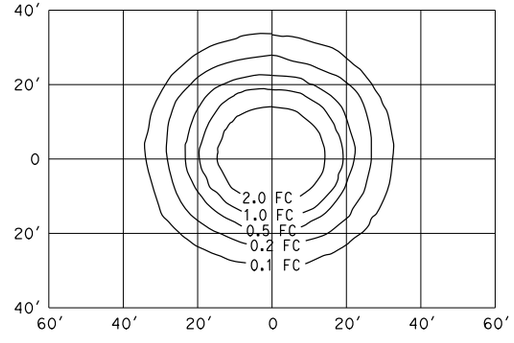

PENDANT SOFFIT
17′ Mounting Height
ANSI Designation S62
Lamp operated at 5,800 lm
70 W (Max)

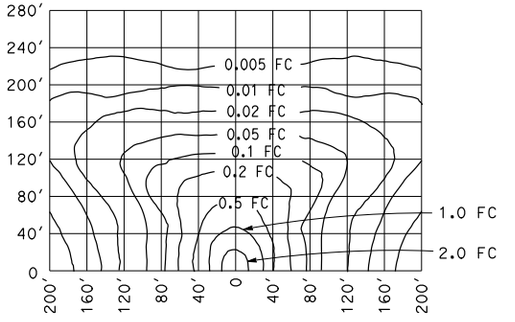

LOW-PRESSURE SODIUM
40′ Mounting Height
Lamp operated at 33,000 lm
180 W (Max)

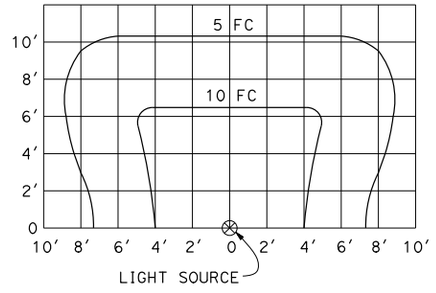

SIGN ILLUMINATION
85 W (Max)

STATE OF CALIFORNIA
DEPARTMENT OF TRANSPORTATION

ELECTRICAL SYSTEMS (ISOFOOTCANDLE CURVES)

NO SCALE

RSP ES-10B DATED APRIL 20, 2018 SUPERSEDES RSP ES-10B DATED JULY 21, 2017 AND STANDARD PLAN ES-10B DATED OCTOBER 30, 2015 - PAGE 482 OF THE STANDARD PLANS BOOK DATED 2015.

REVISED STANDARD PLAN RSP ES-10B

2015 REVISED STANDARD PLAN RSP ES-10B

12-13-17

© 2016 California Department of Transportation
All Rights Reserved

Dist	COUNTY	ROUTE	POST MILES TOTAL PROJECT	SHEET No.	TOTAL SHEETS
04	SCL	101,237	45.2/45.8, 2.7/3.3	664	736

REGISTERED CIVIL ENGINEER

July 15, 2016
PLANS APPROVAL DATE

REGISTERED PROFESSIONAL ENGINEER — Stanley P. Johnson — No. C57793 — Exp. 3-31-18 — CIVIL — STATE OF CALIFORNIA

THE STATE OF CALIFORNIA OR ITS OFFICERS OR AGENTS SHALL NOT BE RESPONSIBLE FOR THE ACCURACY OR COMPLETENESS OF SCANNED COPIES OF THIS PLAN SHEET.

TO ACCOMPANY PLANS DATED _____

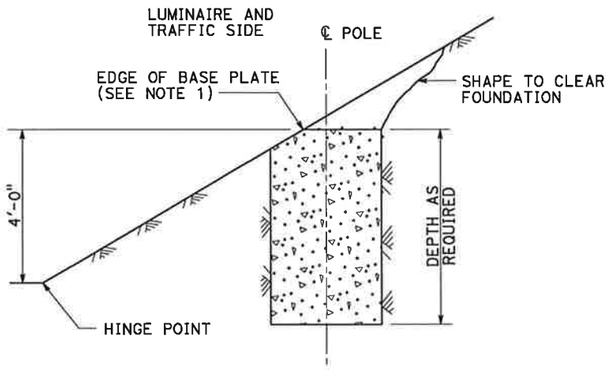

CUT SLOPES
STEEPER THAN 4:1,
LESS THAN 2:1
DETAIL A-1
See Note 2 and 3

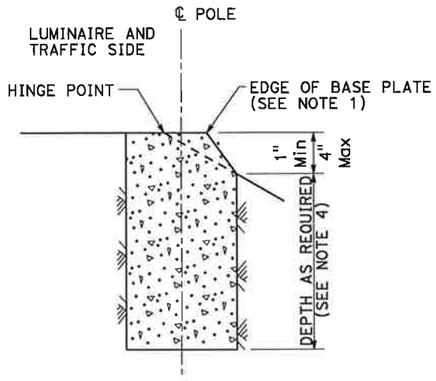

FILL SLOPES
STEEPER THAN 4:1,
LESS THAN 2:1
DETAIL A-2
See Note 2 and 3

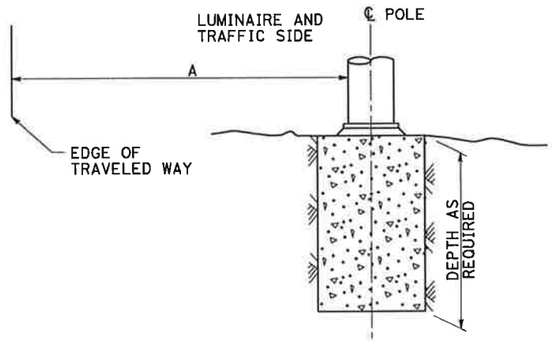

FLAT SECTIONS, CUT OR FILL SLOPES
4:1 OR FLATTER
DETAIL A-3
See Note 2

STANDARD TYPE	SETBACK (DIMENSION A)
32	30'-0" (Min)
31	20'-0" (Min)
15, 15D, 15-SB, 21, 21D, 30	ARM LENGTH (Min)

FOUNDATIONS ADJACENT TO ALL ROADWAYS EXCEPT IN SIDEWALK, MEDIAN AND ISLAND AREAS
DETAIL A

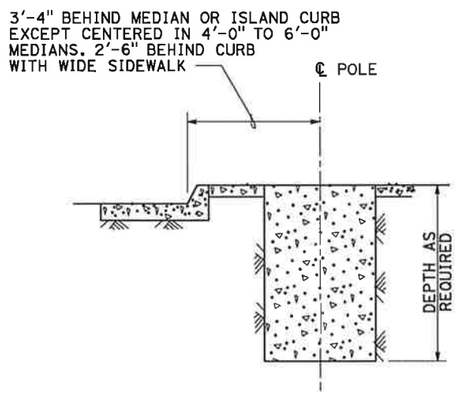

MEDIAN, ISLAND
OR WIDE SIDEWALK
DETAIL B-1
7' Wide and wider

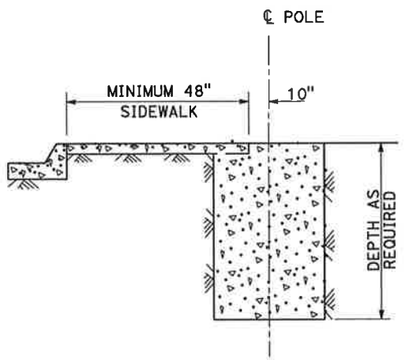

NARROW SIDEWALK
DETAIL B-2
Less than 7' wide

FOUNDATIONS IN SIDEWALK, MEDIAN AND ISLAND AREAS
DETAIL B

NOTES:

1. Where a portion of the foundation is above grade, the top edges shall have a 1" chamfer.
2. Slopes shall be horizontal to vertical ratio (Horizontal : Vertical).
3. Horizontal setbacks on cut and fill slopes steeper than 4:1 shall not exceed the distance shown for flat sections.
4. CIDH embedment depth shall be increased beyond standard depths by the diameter of the CIDH.

STATE OF CALIFORNIA
DEPARTMENT OF TRANSPORTATION

ELECTRICAL SYSTEMS (FOUNDATION INSTALLATIONS)

NO SCALE

RSP ES-11 DATED JULY 15, 2016 SUPERSEDES STANDARD PLAN ES-11 DATED DATED OCTOBER 30, 2015 - PAGE 483 OF THE STANDARD PLANS BOOK DATED 2015.

REVISED STANDARD PLAN RSP ES-11

6-20-16

2015 REVISED STANDARD PLAN RSP ES-11

© 2017 California Department of Transportation
All Rights Reserved

Dist	COUNTY	ROUTE	POST MILES TOTAL PROJECT	SHEET No.	TOTAL SHEETS
04	SCL	101,237	45.2/45.8, 2.7/3.3	665	736

H.R.
REGISTERED ELECTRICAL ENGINEER

Hamid Zolfaghari
No. E15636
Exp. 12-31-17
ELECTRICAL
REGISTERED PROFESSIONAL ENGINEER
STATE OF CALIFORNIA

July 21, 2017
PLANS APPROVAL DATE

THE STATE OF CALIFORNIA OR ITS OFFICERS OR AGENTS SHALL NOT BE RESPONSIBLE FOR THE ACCURACY OR COMPLETENESS OF SCANNED COPIES OF THIS PLAN SHEET.

TO ACCOMPANY PLANS DATED _____

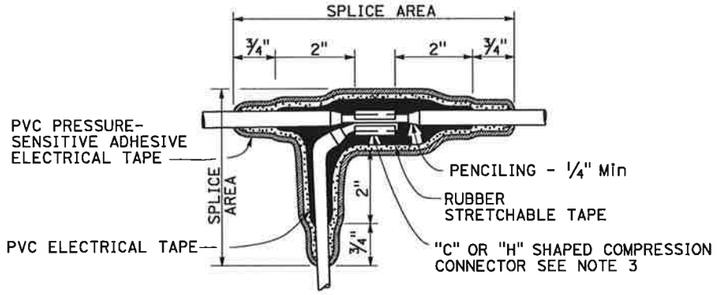

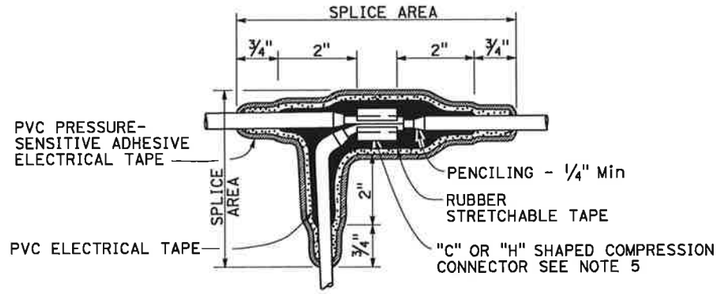

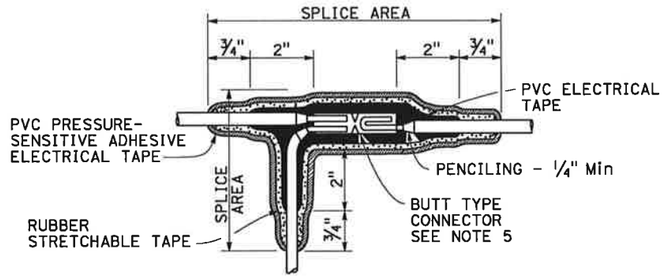

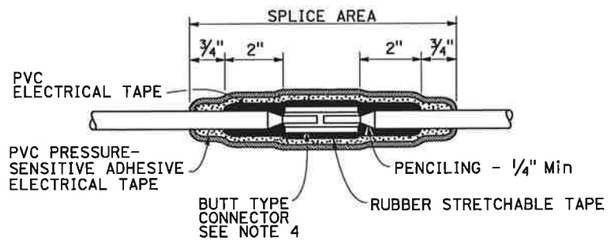

NOTES:

1. Dimensions are minimum.
2. Rubber tapes shall be rolled after application.
3. Between 1 free-end and 1 through conductor.
4. Between 2 free-end conductors.
5. Between 3 free-end conductors.

TYPICAL SPLICE INSULATION METHOD B

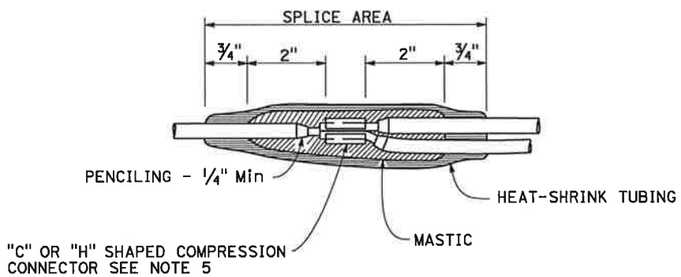

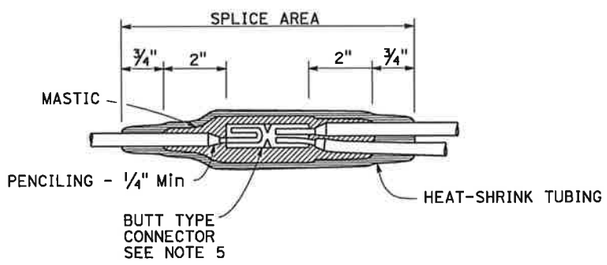

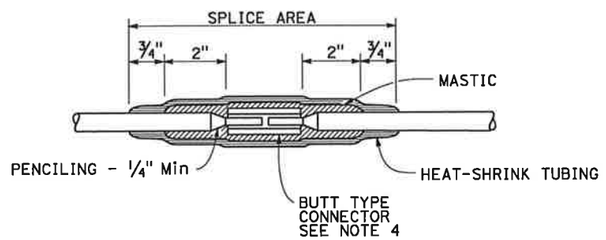

TYPICAL SPLICE INSULATION HEAT-SHRINK TUBING

STATE OF CALIFORNIA
DEPARTMENT OF TRANSPORTATION

ELECTRICAL SYSTEMS (SPLICE INSULATION METHODS DETAILS)

NO SCALE

RSP ES-13A DATED JULY 21, 2017 SUPERSEDES RSP ES-13A DATED APRIL 15, 2016 AND STANDARD PLAN ES-13A DATED OCTOBER 30, 2015 - PAGE 484 OF THE STANDARD PLANS BOOK DATED 2015.

REVISED STANDARD PLAN RSP ES-13A

2015 REVISED STANDARD PLAN RSP ES-13A

4-7-17

© 2016 California Department of Transportation
All Rights Reserved

Dist	COUNTY	ROUTE	POST MILES TOTAL PROJECT	SHEET No.	TOTAL SHEETS
04	SCL	101,237	45.2/45.8, 2.7/3.3	666	736

Theresa Gabriel
REGISTERED ELECTRICAL ENGINEER

April 15, 2016
PLANS APPROVAL DATE

Theresa Aziz Gabriel No. E15129 Exp. 6-30-16 ELECTRICAL — REGISTERED PROFESSIONAL ENGINEER — STATE OF CALIFORNIA

THE STATE OF CALIFORNIA OR ITS OFFICERS OR AGENTS SHALL NOT BE RESPONSIBLE FOR THE ACCURACY OR COMPLETENESS OF SCANNED COPIES OF THIS PLAN SHEET.

TO ACCOMPANY PLANS DATED _____

CIRCUIT VOLTAGE	FUSE VOLTAGE RATING	FUSE CURRENT RATING						
		HPS LAMP BALLAST		LOW PRESSURE SODIUM BALLAST	INDUCTION SIGN LIGHTING	SINGLE PHASE (TWO WIRE) TRANSFORMERS (PRIMARY SIDE)		
		70 W	100 W	180 W	85 W	1 kVA	2 kVA	3 kVA
120 V	250 V	5 A	5 A	5 A	5 A	10 A	20 A	30 A
240 V	250 V	5 A	5 A	5 A	5 A	6 A	10 A	20 A
480 V	500-600 V	5 A	5 A	3 A	1 A (SEE NOTE 2)	3 A	6 A	10 A

NOTES:

1. Primary lines of multiple ballasts shall be provided with fused connectors. Fuse ratings shall be as noted above.
2. See Standard Plan ES-15D, Type SC3 control.

FUSE RATINGS FOR FUSED CONNECTORS

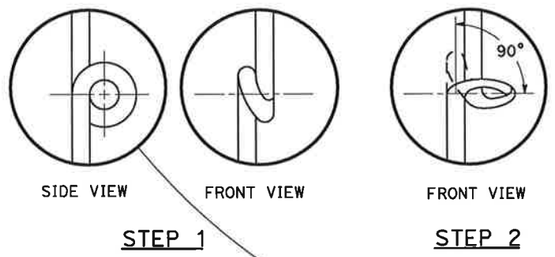

CONTINUE KINK TO AT LEAST 90° POSITION AS INDICATED IN STEP 2.

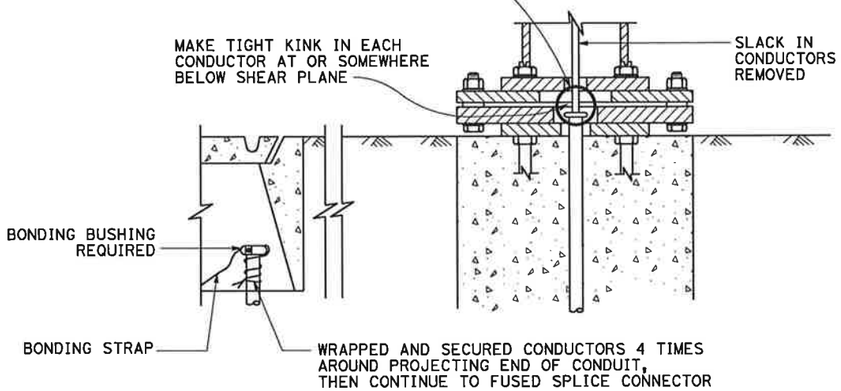

KINKING DETAIL FOR SLIP BASE STANDARDS

DETAIL A

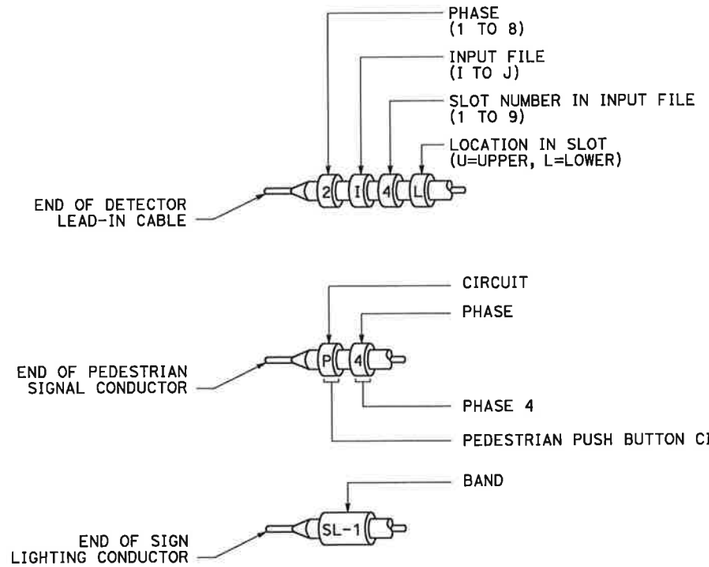

TYPICAL BANDING DETAILS

DETAIL B

STATE OF CALIFORNIA
DEPARTMENT OF TRANSPORTATION

ELECTRICAL SYSTEMS (FUSE RATING, KINKING AND BANDING DETAIL)

NO SCALE

RSP ES-13B DATED APRIL 15, 2016 SUPERSEDES STANDARD PLAN ES-13B DATED OCTOBER 30, 2015 - PAGE 485 OF THE STANDARD PLANS BOOK DATED 2015.

REVISED STANDARD PLAN RSP ES-13B

2015 REVISED STANDARD PLAN RSP ES-13B

1-12-16

© 2016 California Department of Transportation
All Rights Reserved

Dist	COUNTY	ROUTE	POST MILES TOTAL PROJECT	SHEET No.	TOTAL SHEETS
04	SCL	101,237	45.2/45.8, 2.7/3.3	667	736

Theresa Gabriel
REGISTERED ELECTRICAL ENGINEER

April 15, 2016
PLANS APPROVAL DATE

Theresa Aziz Gabriel No. E15129 Exp. 6-30-16 ELECTRICAL — REGISTERED PROFESSIONAL ENGINEER — STATE OF CALIFORNIA

THE STATE OF CALIFORNIA OR ITS OFFICERS OR AGENTS SHALL NOT BE RESPONSIBLE FOR THE ACCURACY OR COMPLETENESS OF SCANNED COPIES OF THIS PLAN SHEET.

TO ACCOMPANY PLANS DATED _____

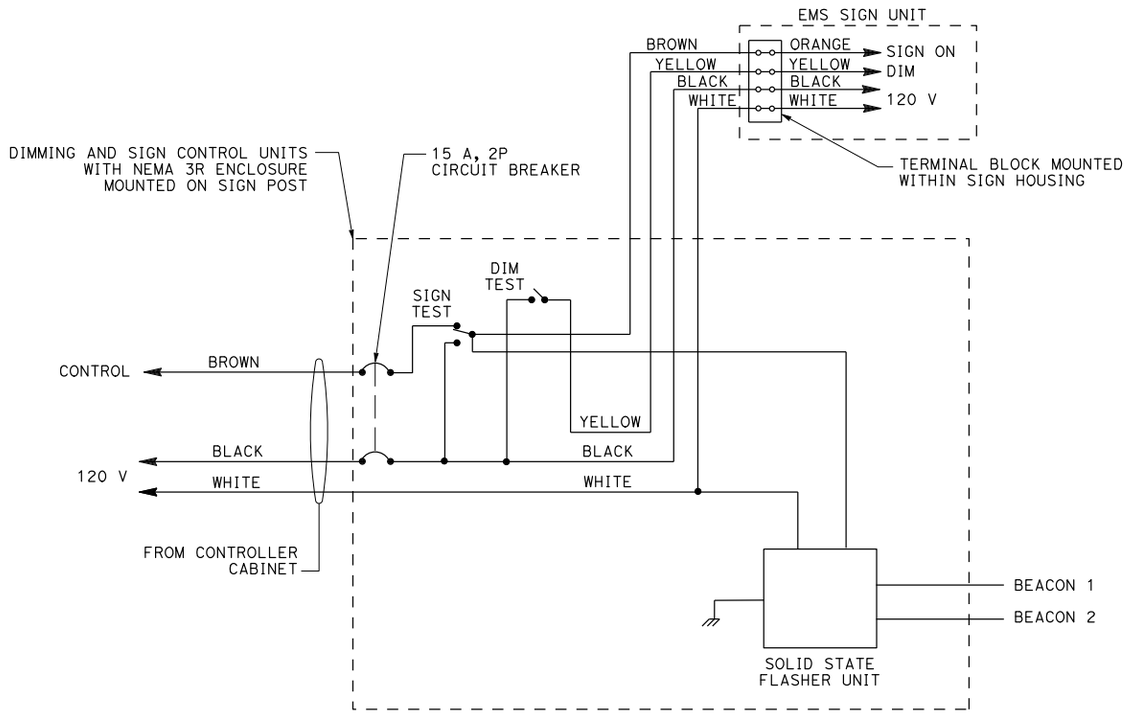

WIRING DIAGRAM
LED EXTINGUISHABLE MESSAGE SIGN
DETAIL A

THE FLASHER SHALL MATE WITH A CINCH-JONES SOCKET S-406-SB OR EQUAL AND CONNECTED AS FOLLOWS:

PIN	CIRCUIT	PIN	CIRCUIT
7	LOAD	10	NEUTRAL
8	LOAD	11	LINE
9	CHASSIS GROUND	12	NOT USED

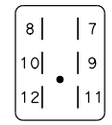

CONNECTOR SOCKET
SOLID STATE FLASHER UNIT

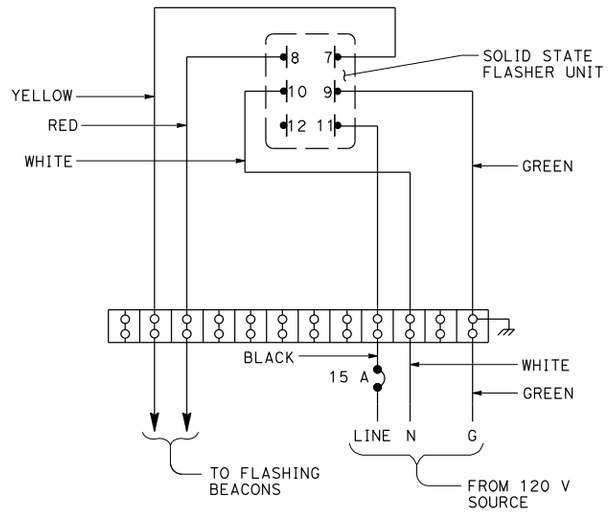

WIRING DIAGRAM
FLASHING BEACON CONTROL ASSEMBLY
DETAIL B

STATE OF CALIFORNIA
DEPARTMENT OF TRANSPORTATION

ELECTRICAL SYSTEMS (CONTROL ASSEMBLY WIRING DIAGRAMS)

NO SCALE

RSP ES-14B DATED APRIL 15, 2016 SUPERSEDES STANDARD PLAN ES-14B DATED OCTOBER 30, 2015 - PAGE 487 OF THE STANDARD PLANS BOOK DATED 2015.

REVISED STANDARD PLAN RSP ES-14B

2015 REVISED STANDARD PLAN RSP ES-14B

1-22-16

© 2017 California Department of Transportation
All Rights Reserved

Dist	COUNTY	ROUTE	POST MILES TOTAL PROJECT	SHEET No.	TOTAL SHEETS
04	SCL	101,237	45.2/45.8, 2.7/3.3	668	736

REGISTERED CIVIL ENGINEER

January 20, 2017
PLANS APPROVAL DATE

Stanley P. Johnson No. C57793 Exp. 3-31-18 CIVIL — REGISTERED PROFESSIONAL ENGINEER — STATE OF CALIFORNIA

THE STATE OF CALIFORNIA OR ITS OFFICERS OR AGENTS SHALL NOT BE RESPONSIBLE FOR THE ACCURACY OR COMPLETENESS OF SCANNED COPIES OF THIS PLAN SHEET.

TO ACCOMPANY PLANS DATED _____

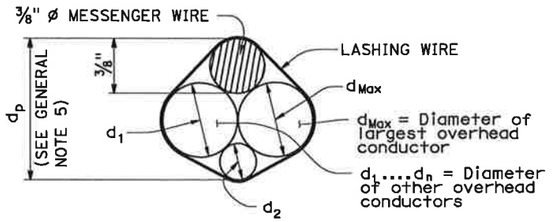

$d_p = 3/8" + d_{Max} + 0.30 * (d_1 + d_2 + \ldots d_n)$

PROJECTED DEPTH OF OVERHEAD BUNDLE, (d_p)

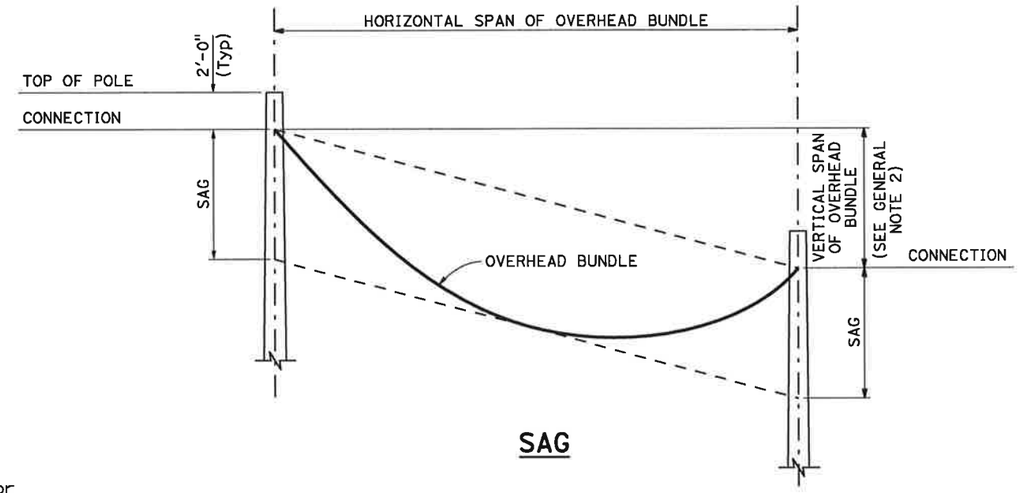

SAG

Design: AASHTO Standard Specifications for Structural Supports for Highway Signs, Luminaires and Traffic Signals, Fifth Edition (LTS-5).

GROUP LOAD COMBINATIONS:

I Dead Load
II Dead Load + Wind Load
III Dead Load + 0.5 (Wind Load) + Ice Load
IV Fatigue: Not used

LOADING:

Wind Loading: 100 mph (3-second gust)
Wind Recurrence Interval: 10 years
Combined height, exposure, and elevated terrain factor = 1.05 (Exposure C, structure is not located on or over the top half of a ridge, hill, or escarpment)

Ice Loading: 3.0 psf on surfaces, 0.60 in radial thickness of ice at a unit weight of 60 pcf on overhead bundles

BASIC DESIGN VALUES:

Timber Poles: Fb = 1850 psi
Fv = 110 psi
Fcp = 230 psi
Fc = 950 psi
E = 1500 x 10^3 psi

DESIGN WIRE BREAKING STRENGTHS:

ASTM A475, Utilities Grade, 7 strand modified by termination efficiency factor of 0.8

FOUNDATION DESIGN NOTES:

1. Pole embedment depth design is based on Broms' approximate procedure as described in Article 13.6 of AASHTO LTS-5.
2. Embedment depth is calculated based on following soil parameters,
   Cohesive Soil:
   Shear strength of soil c = 1500 psf.
   Cohesionless Soil:
   ø = 30 deg, γ = 120 pcf.
   Soil assumed to be unsaturated.
3. An overload factor of 2.0 and an undercapacity factor of 0.7 were used for safety factor of 2.86.
4. Allowable vertical bearing pressure at the end bearing of poles is 3000 psf at 6 feet or more embedment.
5. Guy wire anchor minimum allowable tension capacity, "Qa" = 8,900 lbs.

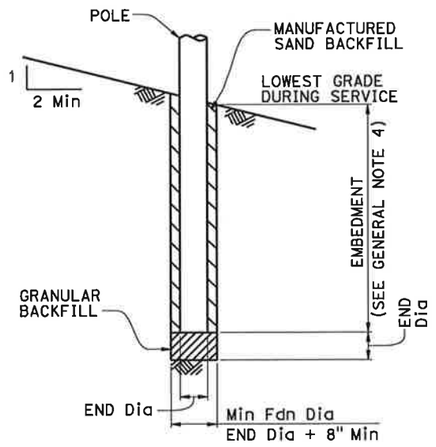

POLE FOUNDATION

GENERAL NOTES:

1. The messenger wire and any combination of overhead conductors must not exceed either a self weight of 3.0 lb/ft or the maximum d in the pole selection tables.
2. The maximum vertical span is 10% of the horizontal span.
3. For poles with adjacent unbalanced horizontal spans, the shortest horizontal span must be at least 50% of the largest horizontal span.
4. Add 2'-0" for slopes above 1V:4H.
5. For a pole supporting multiple spans, calculate d_p for each span and use the largest value.
6. Do not exceed the attachments shown.

DIAMETERS AND SELF WEIGHT OF OVERHEAD CONDUCTORS

CONDUCTOR OR CABLE TYPE	DIAMETER d (in)	WEIGHT w (plf)
3 CONDUCTOR SIGNAL CABLE (3CSC)	0.400	0.0980
5 CONDUCTOR SIGNAL CABLE (5CSC)	0.500	0.1560
9 CONDUCTOR SIGNAL CABLE (9CSC)	0.650	0.2760
12 CONDUCTOR SIGNAL CABLE (12CSC)	0.800	0.3970
28 CONDUCTOR SIGNAL CABLE (28CSC)	0.900	0.6490
1-#14	0.166	0.0235
1-#12	0.185	0.0330
1-#10	0.210	0.0476
1-#8	0.271	0.0774
1-#6	0.310	0.1130
1-#4	0.359	0.1690
1-#3	0.388	0.2080
1-#2	0.420	0.2560
1-#1	0.498	0.3340
6-CONDUCTOR SIGNAL INTERCONNECT CABLE (SIC)	0.350	0.0860
12-CONDUCTOR SIGNAL INTERCONNECT CABLE (SIC)	0.500	0.1440
DETECTOR LEAD-IN CABLE (DLC)	0.310	0.0440
12 to 48-STRAND FIBER OPTIC CABLE (48FOC)	0.424	0.0600
72-STRAND FIBER OPTIC CABLE (72FOC)	0.484	0.0770
96-STRAND FIBER OPTIC CABLE (96FOC)	0.535	0.1050
144-STRAND FIBER OPTIC CABLE (144FOC)	0.670	0.1890
3/8" ø MESSENGER WIRE	0.375	0.2730

STATE OF CALIFORNIA
DEPARTMENT OF TRANSPORTATION

TEMPORARY WOOD POLES GENERAL NOTES

NO SCALE

RSP ES-18A DATED JANUARY 20, 2017 SUPPLEMENTS THE STANDARD PLANS BOOK DATED 2015.

REVISED STANDARD PLAN RSP ES-18A

2015 REVISED STANDARD PLAN RSP ES-18A

11-22-16

© 2017 California Department of Transportation
All Rights Reserved

Dist	COUNTY	ROUTE	POST MILES TOTAL PROJECT	SHEET No.	TOTAL SHEETS
04	SCL	101,237	45.2/45.8, 2.7/3.3	669	736

REGISTERED CIVIL ENGINEER

Stanley P. Johnson
No. C57793
Exp. 3-31-18
CIVIL
REGISTERED PROFESSIONAL ENGINEER
STATE OF CALIFORNIA

January 20, 2017
PLANS APPROVAL DATE

THE STATE OF CALIFORNIA OR ITS OFFICERS OR AGENTS SHALL NOT BE RESPONSIBLE FOR THE ACCURACY OR COMPLETENESS OF SCANNED COPIES OF THIS PLAN SHEET.

TO ACCOMPANY PLANS DATED _____

POLE SELECTION TABLE

LEGEND

- Wood Pole No Attachments
- A — Wood Pole with Attachments
- —OH— Overhead Bundle

OVERHEAD BUNDLE HORIZONTAL SPAN (Max)		CASE 1N				CASE 2N				CASE 3N				CASE 4N				CASE 5N
	MAXIMUM d_p	1"	1.5"	2.0"	2.5"	1"	1.5"	2.0"	2.5"	1.0"	1.5"	2.0"	2.5"	1"	1.5"	2.0"	2.5"	N/A
50′	MINIMUM POLE CLASS	H-1	H-2	H-2	H-2	4	3	2	1	H-2	H-2	H-3	H-3	H-4	H-4	H-4	H-5	CLASS 1 E = 10′
	POLE EMBEDMENT (E)	11′				10′				11′				12′				
100′	MINIMUM POLE CLASS	H-2	H-3	H-4	H-5	1	H-1	H-2	H-3	H-4	H-5	H-5	H-6	H-5	H-5	H-6		
	POLE EMBEDMENT (E)	12′				11′				12′				12′				
150′	MINIMUM POLE CLASS	H-4	H-5	H-6		H-1	H-2	H-3	H-5	H-6				H-6				
	POLE EMBEDMENT (E)	12′				12′				12′				12′				
200′	MINIMUM POLE CLASS	H-5	H-6			H-2	H-3	H-5										
	POLE EMBEDMENT (E)	12′				12′												

1. CCTV camera assembly or vehicle detection system
2. Overhead bundle consisting of a 3/8" ø messenger wire, overhead conductors, and lashing wire
3. Luminaire with mast arm
4. Pedestrian push button assembly or accessible push button assembly
5. Signal face with 3 indications or single sheet sign panel (10 SQFT Max)
6. Riser with weather head as required
7. Pull box as required
8. Grounding as required
9. Single flashing beacon or single sheet sign panel (4 SQFT Max)
10. Single sheet sign panel (4′ x 4′ Max) or signal face with 3 indications
11. Flashing beacon control assembly
12. NEMA 3R enclosure, 26"(W) x 56"(H) x 12"(D) Max dimensions. Max weight including batteries, 450 lbs
13. 25′ SQFT Max total photovoltaic panels mounted as shown as required
14. 2-12" flashing beacons

NOTES:

1. In addition to other restrictions on maximum horizontal span, this horizontal span must not exceed 100′.
2. Cases 1N, 3N and 4N may substitute the attachments shown in Case 5N if the photovoltaic panel is not included.
3. For Case 1N without an overhead bundle (item ②) use minimum pole class H-1 with E=11′.

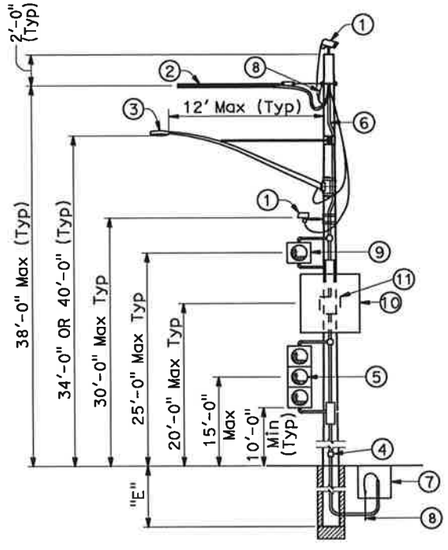

CASE 1N
POLE AT DEAD END WITH ATTACHMENTS
See Note 2

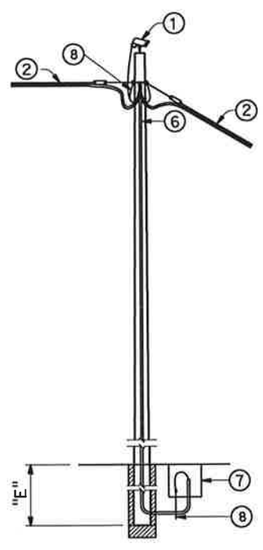

CASE 2N
POLE AT TANGENT WITHOUT ATTACHMENTS

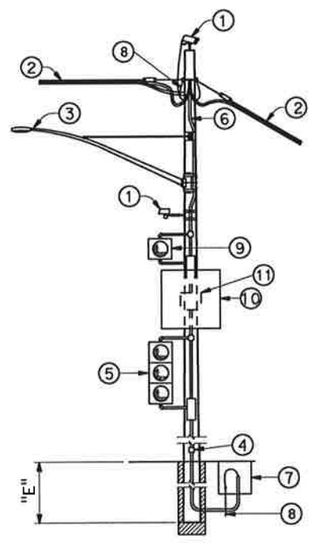

CASE 3N
POLE AT TANGENT OR CORNER WITH ATTACHMENTS
See Note 2

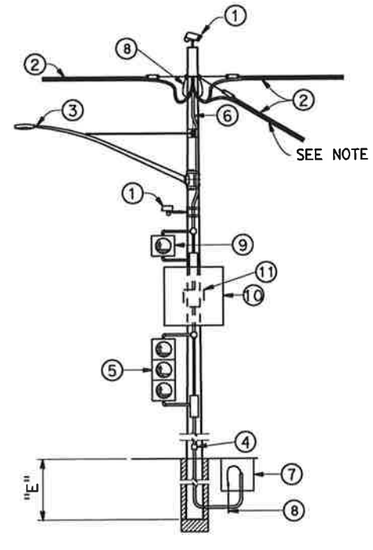

CASE 4N
POLE AT JUNCTION WITH ATTACHMENTS
See Note 2

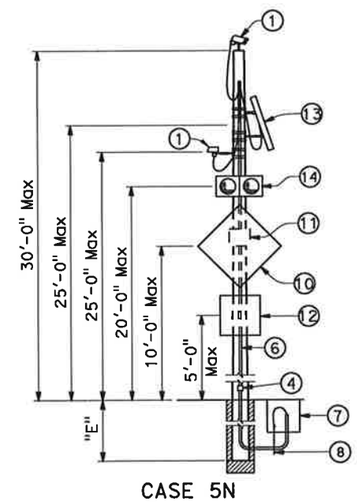

CASE 5N
POLE WITHOUT OVERHEAD BUNDLE WITH ATTACHMENTS

STATE OF CALIFORNIA
DEPARTMENT OF TRANSPORTATION

TEMPORARY WOOD POLES
NON-GUYED - NO SIGNALS ON SPANS

NO SCALE

RSP ES-18B DATED JANUARY 20, 2017 SUPPLEMENTS THE STANDARD PLANS BOOK DATED 2015.

REVISED STANDARD PLAN RSP ES-18B

11-22-16

2015 REVISED STANDARD PLAN RSP ES-18B

© 2017 California Department of Transportation
All Rights Reserved

Dist	COUNTY	ROUTE	POST MILES TOTAL PROJECT	SHEET No.	TOTAL SHEETS
04	SCL	101,237	45.2/45.8, 2.7/3.3	670	736

REGISTERED CIVIL ENGINEER

Stanley P. Johnson
No. C57793
Exp. 3-31-18
CIVIL
REGISTERED PROFESSIONAL ENGINEER
STATE OF CALIFORNIA

January 20, 2017
PLANS APPROVAL DATE

THE STATE OF CALIFORNIA OR ITS OFFICERS OR AGENTS SHALL NOT BE RESPONSIBLE FOR THE ACCURACY OR COMPLETENESS OF SCANNED COPIES OF THIS PLAN SHEET.

TO ACCOMPANY PLANS DATED _____

POLE SELECTION TABLE

LEGEND

A — Wood Pole with Attachments

—OH— Overhead Bundle

——→ Guy Anchor

CASE 1G

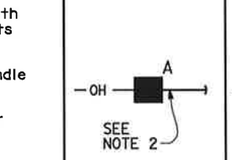

CASE 2G

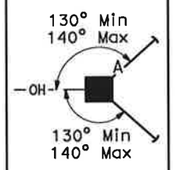

CASE 3G

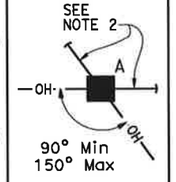

CASE 4G

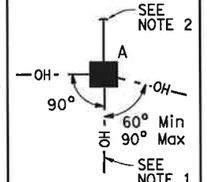

OVERHEAD BUNDLE HORIZONTAL SPAN (Max)		MAXIMUM d_p	1"	1.5"	2.0"	2.5"	1"	1.5"	2.0"	2.5"	1"	1.5"	2.0"	2.5"	1"	1.5"	2.0"	2.5"
	50′	MINIMUM POLE CLASS	H-1	H-1	H-2	H-2	1	1	1	1	1	1	1	H-1	H-2	H-2	H-3	H-3
		POLE EMBEDMENT (E)	10′				9′				9′				11′			
	100′	MINIMUM POLE CLASS	H-2	H-2	H-3	H-4	1	H-1	H-1	H-1	1	H-1	H-2	H-2	H-3	H-3	H-4	H-4
		POLE EMBEDMENT (E)	11′				9′				9′				12′			
	150′	MINIMUM POLE CLASS	H-3	H-3	H-4	H-5	H-1	H-1	H-2	H-2	H-2	H-3	H-3	H-3	H-4	H-5	H-5	H-6
		POLE EMBEDMENT (E)	11′				9′				9′				12′			
	200′	MINIMUM POLE CLASS	H-4	H-4	H-5	H-6	H-1	H-2	H-3	H-3	H-3	H-3	H-4	H-4	H-5	H-6		
		POLE EMBEDMENT (E)	11′				9′				9′				12′			

1. CCTV camera assembly or vehicle detection system
2. Overhead bundle consisting of a ⅜" ø messenger wire, overhead conductors, and lashing wire
3. Luminaire with mast arm
4. Pedestrian push button assembly or accessible push button assembly
5. Signal face with 3 indications or single sheet sign panel (10 SQFT Max)
6. Riser with weather head as required
7. Pull box as required
8. Grounding as required
9. Single flashing beacon or single sheet sign panel (4 SQFT Max)
10. Single sheet sign panel (4′ x 4′ Max) or signal face with 3 indications
11. Flashing beacon control assembly
12. ½" ø guy wire with white guy marker and strain insulator (for anchorage see "TEMPORARY WOOD POLES-DETAILS No. 2" sheet)

NOTES:

1. In addition to other restrictions on maximum horizontal span, this horizontal span must not exceed 100′.
2. Guy wire in line with opposing span ± 5°.

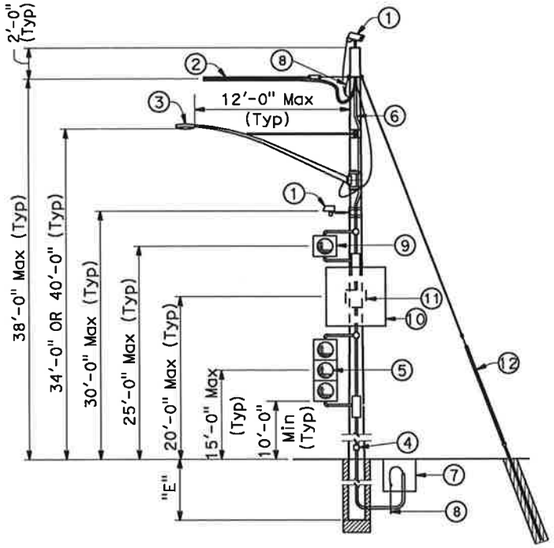

CASE 1G
POLE AT DEAD END WITH ATTACHMENTS

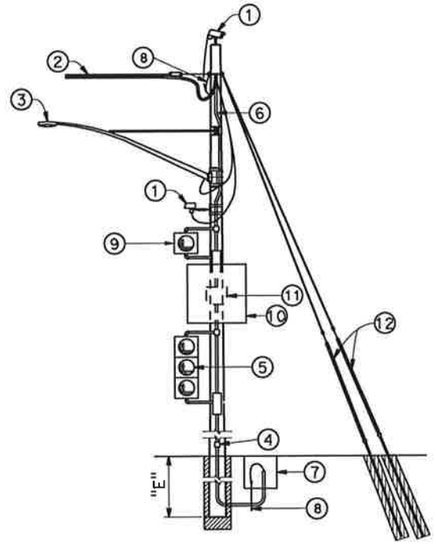

CASE 2G
POLE AT DEAD END WITH ATTACHMENTS

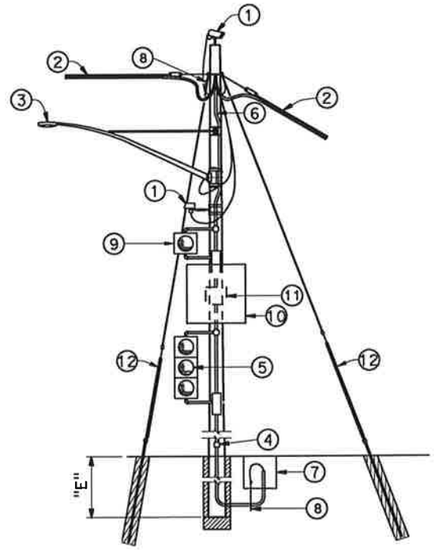

CASE 3G
POLE AT CORNER WITH ATTACHMENTS

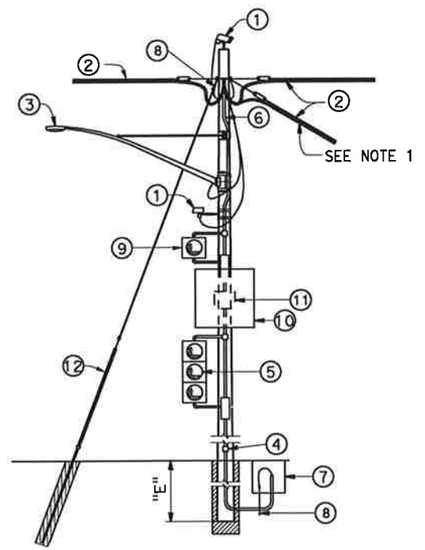

CASE 4G
POLE AT JUNCTION WITH ATTACHMENTS

STATE OF CALIFORNIA
DEPARTMENT OF TRANSPORTATION

TEMPORARY WOOD POLES GUYED - NO SIGNALS ON SPANS

NO SCALE

RSP ES-18C DATED JANUARY 20, 2017 SUPPLEMENTS THE STANDARD PLANS BOOK DATED 2015.

REVISED STANDARD PLAN RSP ES-18C

11-22-16

2015 REVISED STANDARD PLAN RSP ES-18C

© 2017 California Department of Transportation
All Rights Reserved

Dist	COUNTY	ROUTE	POST MILES TOTAL PROJECT	SHEET No.	TOTAL SHEETS
04	SCL	101,237	45.2/45.8, 2.7/3.3	671	736

REGISTERED CIVIL ENGINEER

January 20, 2017
PLANS APPROVAL DATE

REGISTERED PROFESSIONAL ENGINEER — Stanley P. Johnson — No. C57793 — Exp. 3-31-18 CIVIL — STATE OF CALIFORNIA

THE STATE OF CALIFORNIA OR ITS OFFICERS OR AGENTS SHALL NOT BE RESPONSIBLE FOR THE ACCURACY OR COMPLETENESS OF SCANNED COPIES OF THIS PLAN SHEET.

TO ACCOMPANY PLANS DATED _____

LEGEND

- A — Wood Pole with Attachments
- —TS— Overhead Bundle with Signal Faces (See Note 2)
- —OH— Overhead Bundle
- ⟶ Guy Anchor

POLE SELECTION TABLE

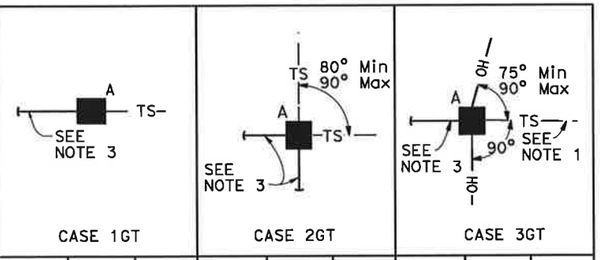

OVERHEAD BUNDLE HORIZONTAL SPAN Max		MAXIMUM dp	CASE 1GT 1"	CASE 1GT 1.5"	CASE 1GT 2.0"	CASE 2GT 1"	CASE 2GT 1.5"	CASE 2GT 2.0"	CASE 3GT 1"	CASE 3GT 1.5"	CASE 3GT 2.0"
	50'	MINIMUM POLE CLASS	H-2	H-3	H-3	H-2	H-2	H-2	H-3	H-4	H-4
		POLE EMBEDMENT (E)	10'			10'			11'		
	100'	MINIMUM POLE CLASS	H-3	H-3	H-4	H-2	H-3	H-3	H-4	H-4	H-5
		POLE EMBEDMENT (E)	11'			10'			11'		
	150'	MINIMUM POLE CLASS	H-3	H-4	H-4	H-2	H-3	H-4	H-4	H-5	H-5
		POLE EMBEDMENT (E)	11'			10'			11'		

NOTES:

1. In addition to other restrictions on maximum horizontal span, this horizontal span must not exceed 100'.
2. Maximum of 2 SIGNAL FACES per span within the hatched regions indicated by "LOCATION OF SIGNAL FACES".
3. Guy wire in line with opposing span ± 5°.

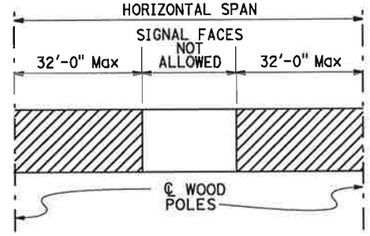

LOCATION OF SIGNAL FACES

1. CCTV camera assembly or vehicle detection system
2. Overhead bundle consisting of ⅜" ø messenger wire and overhead conductors and lashing wire
3. Luminaire with mast arm
4. Pedestrian push button assembly or accessible push button assembly
5. Signal face with 3 indications or single sheet sign panel (10 SQFT Max)
6. Riser with weather head as required
7. Pull box as required
8. Grounding as required
9. ⅜" ø tether wire
10. ½" ø guy wire with white guy marker and strain insulator. For anchorage see "TEMPORARY WOOD POLES-DETAILS No. 2" sheet
11. Pedestrian signal head

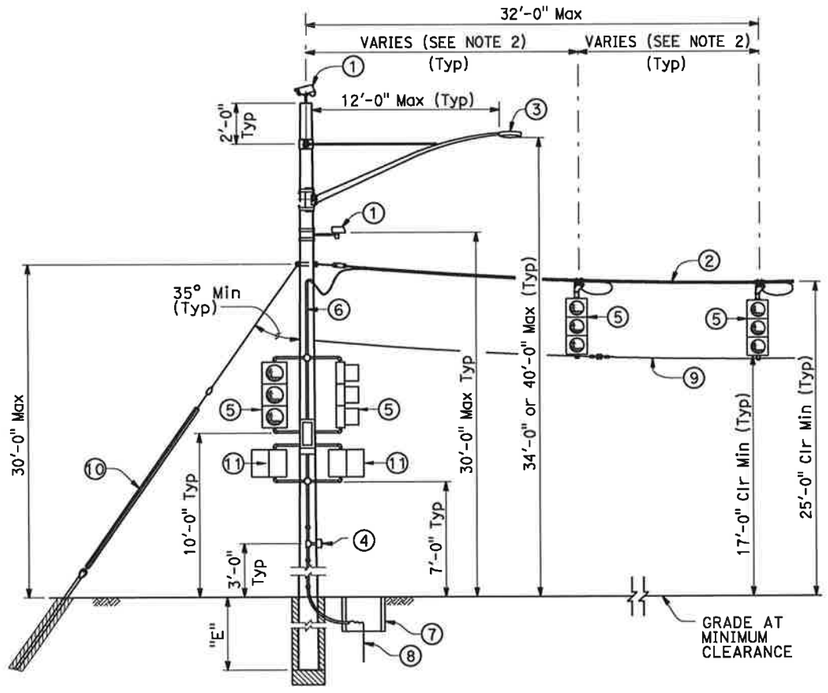

CASE 1GT
POLE AT DEAD END WITH ATTACHMENTS

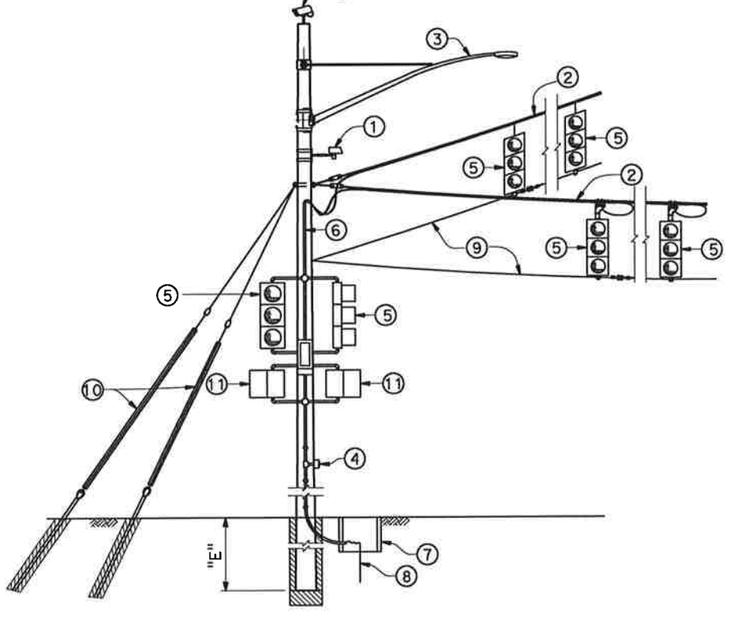

CASE 2GT
POLE AT CORNER WITH ATTACHMENTS

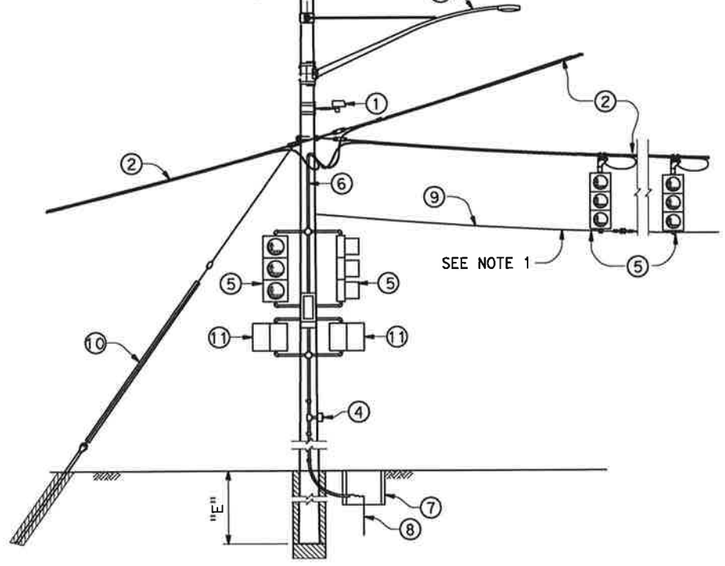

CASE 3GT
POLE AT JUNCTION WITH ATTACHMENTS

STATE OF CALIFORNIA
DEPARTMENT OF TRANSPORTATION

TEMPORARY WOOD POLES GUYED - WITH SIGNAL FACES ON SPANS

NO SCALE

RSP ES-18D DATED JANUARY 20, 2017 SUPPLEMENTS THE STANDARD PLANS BOOK DATED 2015.

REVISED STANDARD PLAN RSP ES-18D

2015 REVISED STANDARD PLAN RSP ES-18D

11-22-16

© 2017 California Department of Transportation
All Rights Reserved

Dist	COUNTY	ROUTE	POST MILES TOTAL PROJECT	SHEET No.	TOTAL SHEETS
04	SCL	101,237	45.2/45.8, 2.7/3.3	672	736

REGISTERED CIVIL ENGINEER

January 20, 2017
PLANS APPROVAL DATE

REGISTERED PROFESSIONAL ENGINEER — Stanley P. Johnson — No. C57793 — Exp. 3-31-18 — CIVIL — STATE OF CALIFORNIA

THE STATE OF CALIFORNIA OR ITS OFFICERS OR AGENTS SHALL NOT BE RESPONSIBLE FOR THE ACCURACY OR COMPLETENESS OF SCANNED COPIES OF THIS PLAN SHEET.

TO ACCOMPANY PLANS DATED _____

2015 REVISED STANDARD PLAN RSP ES-18E

LEGEND

A — Wood Pole with Attachments

— TS — Overhead Bundle with Signal Faces (See Note 1)

POLE SELECTION TABLE

OVERHEAD BUNDLE HORIZONTAL SPAN (Max)			CASE 1NT (A — TS —)		
75′		MAXIMUM dp	1"	1.5"	2.0"
		MINIMUM POLE CLASS	H-5	H-6	H-6
		POLE EMBEDMENT (E)	13′		

1. CCTV camera assembly or vehicle detection system
2. Overhead bundle consisting of a ⅜" ø messenger wire and overhead conductors and lashing wire
3. Luminaire with mast arm
4. Pedestrian push button assembly or accessible push button assembly
5. Signal face with 3 indications or single sheet sign panel (10 SQFT Max)
6. Riser with weather head as required
7. Pull box as required
8. Grounding as required
9. ⅜" ø tether wire
10. Pedestrian signal head

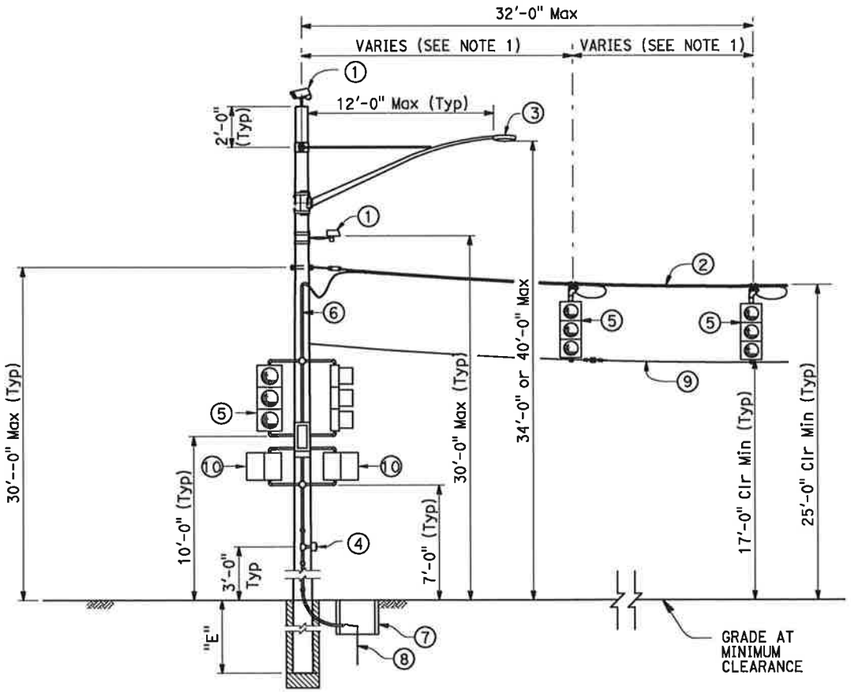

CASE 1NT
POLE AT DEAD END WITH ATTACHMENTS

NOTE:

1. Maximum of 2 SIGNAL FACES per span within the hatched regions indicated by "LOCATION OF SIGNAL FACES".

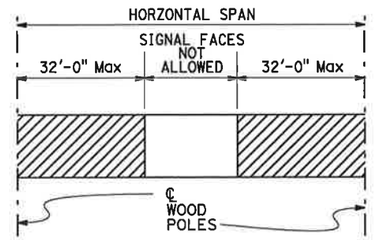

LOCATION OF SIGNAL FACES

STATE OF CALIFORNIA
DEPARTMENT OF TRANSPORTATION

TEMPORARY WOOD POLES NON-GUYED-WITH SIGNAL FACES ON SPAN

NO SCALE

RSP ES-18E DATED JANUARY 20, 2017 SUPPLEMENTS THE STANDARD PLANS BOOK DATED 2015.

REVISED STANDARD PLAN RSP ES-18E

11-22-16

© 2017 California Department of Transportation
All Rights Reserved

Dist	COUNTY	ROUTE	POST MILES TOTAL PROJECT	SHEET No.	TOTAL SHEETS
04	SCL	101,237	45.2/45.8, 2.7/3.3	673	736

REGISTERED CIVIL ENGINEER

January 20, 2017
PLANS APPROVAL DATE

REGISTERED PROFESSIONAL ENGINEER — Stanley P. Johnson — No. C57793 — Exp. 3-31-18 — CIVIL — STATE OF CALIFORNIA

THE STATE OF CALIFORNIA OR ITS OFFICERS OR AGENTS SHALL NOT BE RESPONSIBLE FOR THE ACCURACY OR COMPLETENESS OF SCANNED COPIES OF THIS PLAN SHEET.

TO ACCOMPANY PLANS DATED _____

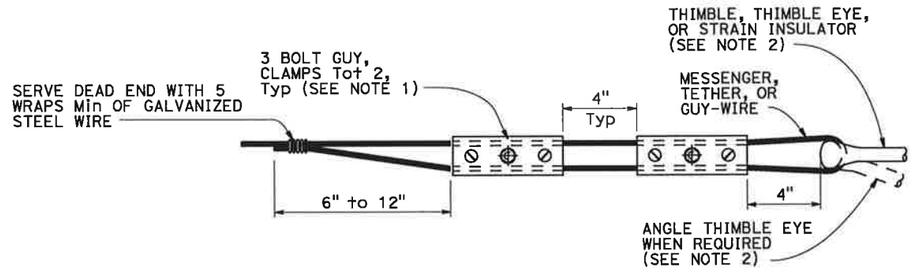

ALTERNATIVE TERMINATION OF MESSENGER WIRES USING GUY CLAMPS

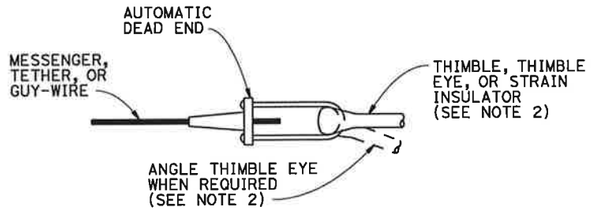

TERMINATION OF WIRES USING AUTOMATIC DEAD END

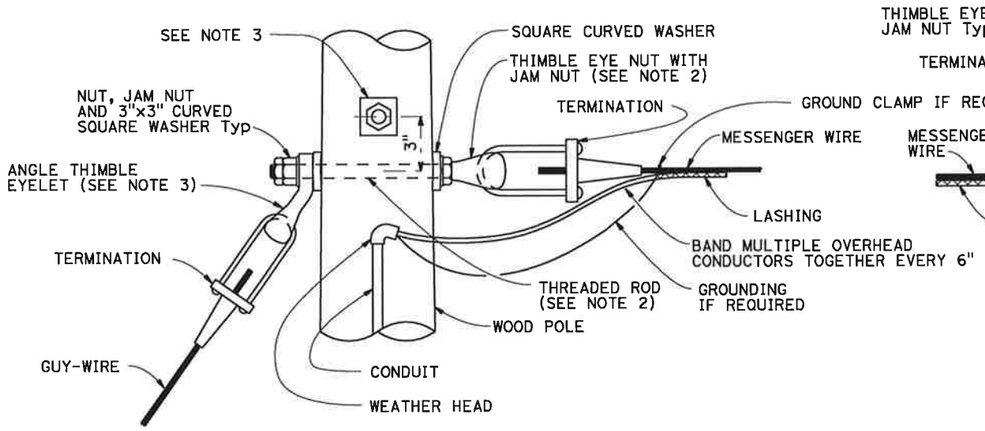

POLE AT DEAD END WITH GUY-WIRE CONNECTION

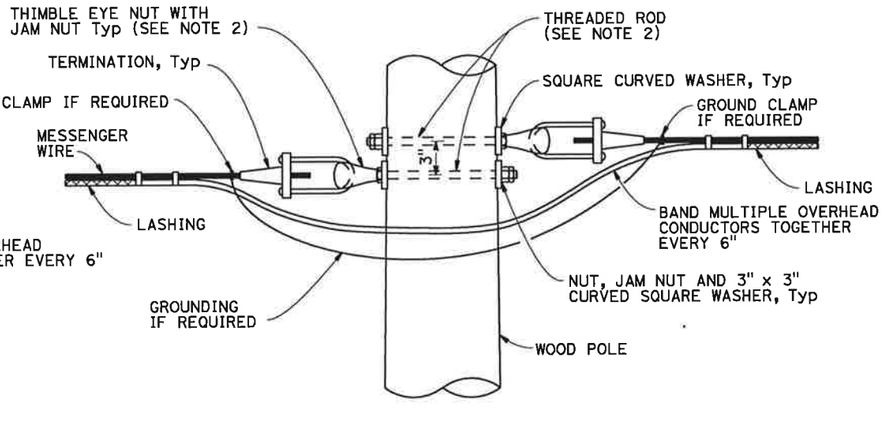

POLE AT TANGENT OR CORNER CONNECTION

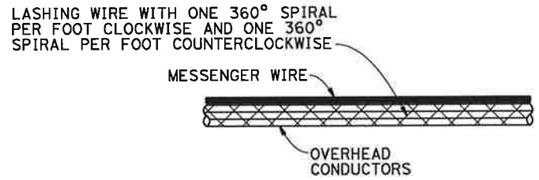

DOUBLE LASHING DETAIL

USE IF d_p IS GREATER THAN 1½"

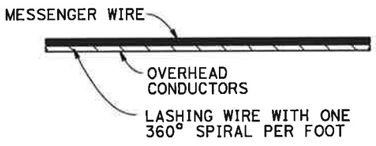

TYPICAL LASHING DETAIL

USE IF d_p IS 1½" OR LESS

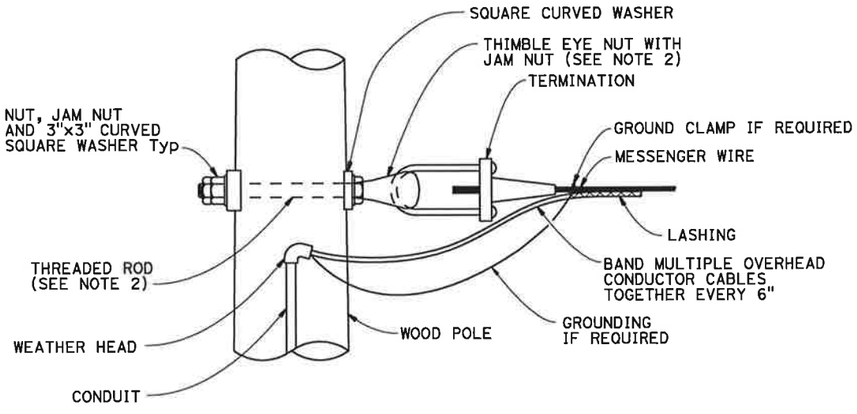

POLE AT DEAD END CONNECTION

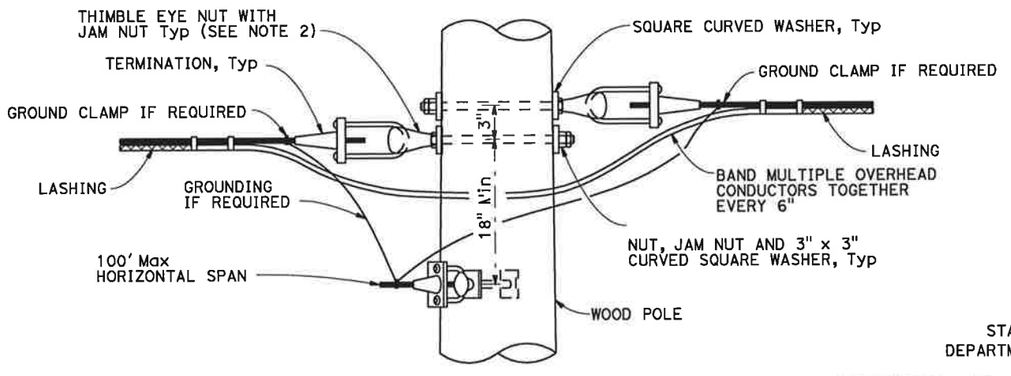

POLE AT JUNCTION CONNECTION

NOTES:

1. For guy wires use 3 clamps.
2. Use ⅝" ø except ¾" ø at guyed wires
3. Install additional angle thimble eyelet at poles with two guy wires.

STATE OF CALIFORNIA
DEPARTMENT OF TRANSPORTATION

TEMPORARY WOOD POLES DETAILS No. 1

NO SCALE

RSP ES-19A DATED JANUARY 20, 2017 SUPPLEMENTS THE STANDARD PLANS BOOK DATED 2015.

REVISED STANDARD PLAN RSP ES-19A

2015 REVISED STANDARD PLAN RSP ES-19A

11-22-16

© 2017 California Department of Transportation
All Rights Reserved

Dist	COUNTY	ROUTE	POST MILES TOTAL PROJECT	SHEET No.	TOTAL SHEETS
04	SCL	101,237	45.2/45.8, 2.7/3.3	674	736

REGISTERED CIVIL ENGINEER

January 20, 2017
PLANS APPROVAL DATE

REGISTERED PROFESSIONAL ENGINEER
Stanley P. Johnson
No. C57793
Exp. 3-31-18
CIVIL
STATE OF CALIFORNIA

THE STATE OF CALIFORNIA OR ITS OFFICERS OR AGENTS SHALL NOT BE RESPONSIBLE FOR THE ACCURACY OR COMPLETENESS OF SCANNED COPIES OF THIS PLAN SHEET.

TO ACCOMPANY PLANS DATED _____

NOTE:

1. For minimum allowable tension capacity of anchors see "Temporary Wood Poles - General Notes" sheet.

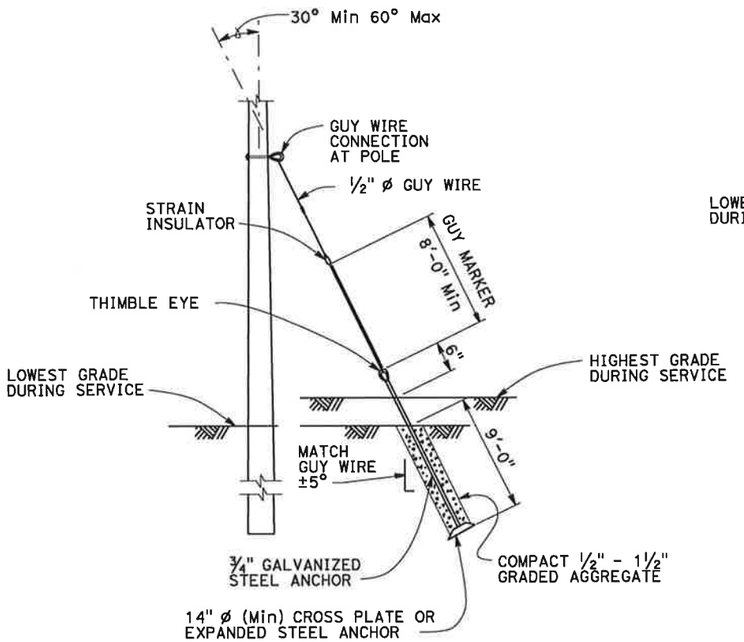

NOTE:

Helical anchor detail may be used in place of expanded steel anchors.

EXPANDED STEEL ANCHOR DETAIL

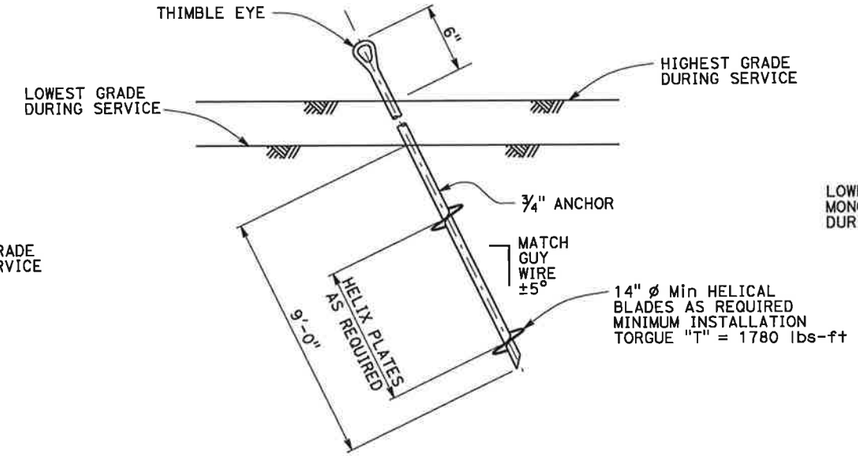

HELICAL ANCHOR DETAIL

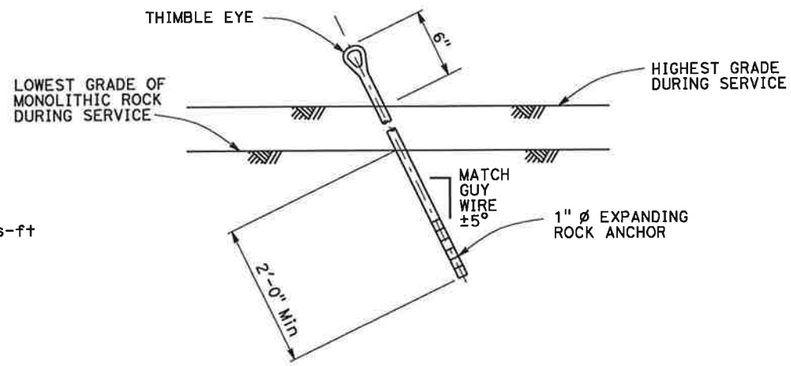

EXPANDING ROCK ANCHOR DETAIL

STATE OF CALIFORNIA
DEPARTMENT OF TRANSPORTATION

TEMPORARY WOOD POLES DETAILS No. 2

NO SCALE

RSP ES-19B DATED JANUARY 20, 2017 SUPPLEMENTS THE STANDARD PLANS BOOK DATED 2015.

REVISED STANDARD PLAN RSP ES-19B

2015 REVISED STANDARD PLAN RSP ES-19B

11-22-16

© 2017 California Department of Transportation
All Rights Reserved

Dist	COUNTY	ROUTE	POST MILES TOTAL PROJECT	SHEET No.	TOTAL SHEETS
04	SCL	101,237	45.2/45.8, 2.7/3.3	675	736

REGISTERED CIVIL ENGINEER

January 20, 2017
PLANS APPROVAL DATE

Stanley P. Johnson No. C57793 Exp. 3-31-18 CIVIL — REGISTERED PROFESSIONAL ENGINEER — STATE OF CALIFORNIA

THE STATE OF CALIFORNIA OR ITS OFFICERS OR AGENTS SHALL NOT BE RESPONSIBLE FOR THE ACCURACY OR COMPLETENESS OF SCANNED COPIES OF THIS PLAN SHEET.

TO ACCOMPANY PLANS DATED _____

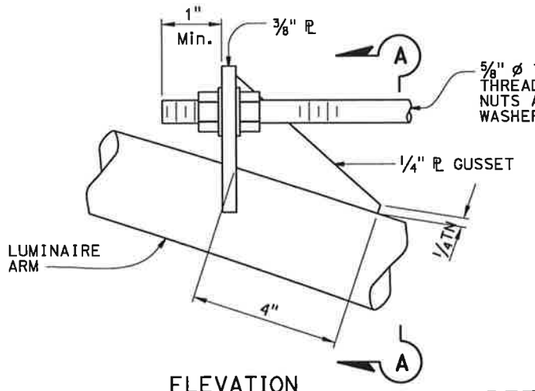

ELEVATION

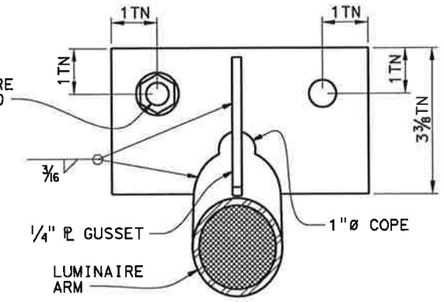

SECTION A-A

DETAIL A
TIE-ROD AT LUMINAIRE ARM

NOTES:

1. Luminaire mast arms must be in compliance with Standard Plan ES-6D with noted modifications.
2. Verify pole dimensions at tie-rod attachment height. Fabricate 8" flat bar with "L" Dimension to maintain an open gap between flanges in finished installation.
3. Not all screw heads and bolt heads are shown for clarity.
4. Mast arm not shown for clarity.

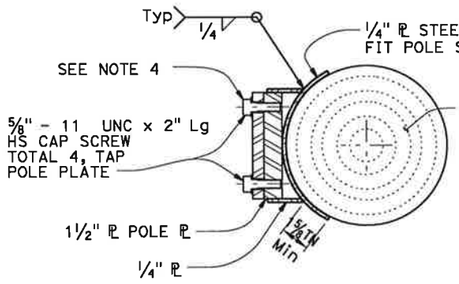

SECTION E-E

LUMINAIRE MAST ARM DATA			
PROJECTED LENGTH	N RISE	Min OD AT POLE	NOMINAL THICKNESS
6'-0"	2'-0"±	3 1/4"	0.1196"
8'-0"	2'-6"±	3 1/2"	
10'-0"	3'-3"±	3 7/8"	
12'-0"	4'-3"±		

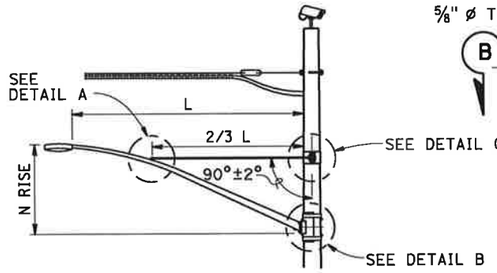

LUMINAIRE MAST ARM

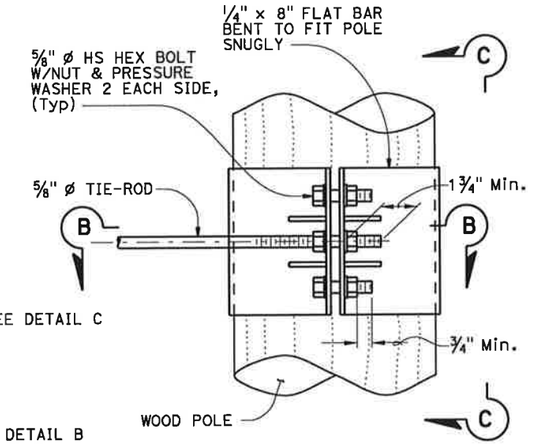

ELEVATION

NOTE:
Not all screw and bolt heads shown for clarity.

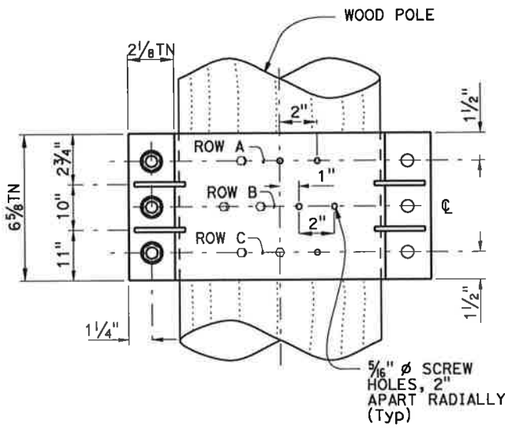

VIEW C-C

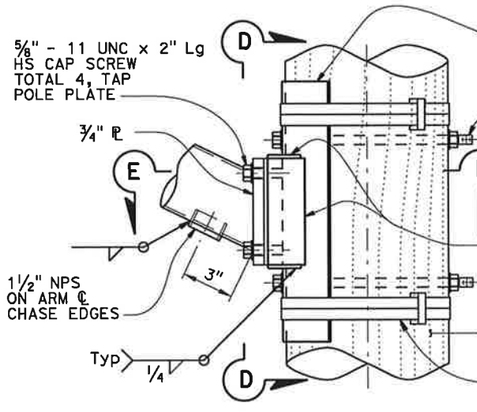

ELEVATION

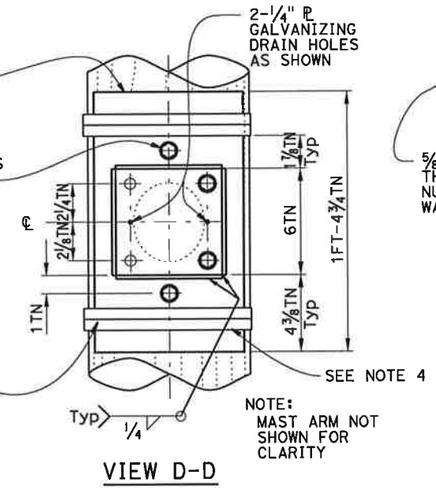

VIEW D-D

DETAIL B
ARM CONNECTION DETAILS

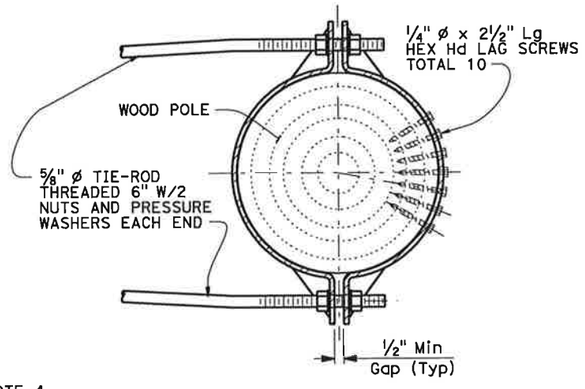

SECTION B-B

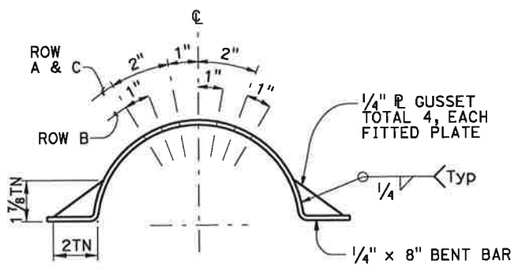

LAG SCREW AND GUSSET PLATE LAYOUT

DETAIL C
TIE-ROD AT POLE

STATE OF CALIFORNIA
DEPARTMENT OF TRANSPORTATION

TEMPORARY WOOD POLES DETAILS No. 3

NO SCALE

RSP ES-19C DATED JANUARY 20, 2017 SUPPLEMENTS THE STANDARD PLANS BOOK DATED 2015.

REVISED STANDARD PLAN RSP ES-19C

11-22-16

2015 REVISED STANDARD PLAN RSP ES-19C

© 2017 California Department of Transportation
All Rights Reserved

Dist	COUNTY	ROUTE	POST MILES TOTAL PROJECT	SHEET No.	TOTAL SHEETS
04	SCL	101,237	45.2/45.8, 2.7/3.3	676	736

REGISTERED CIVIL ENGINEER

Stanley P. Johnson
No. C57793
Exp. 3-31-18
CIVIL
REGISTERED PROFESSIONAL ENGINEER
STATE OF CALIFORNIA

January 20, 2017
PLANS APPROVAL DATE

THE STATE OF CALIFORNIA OR ITS OFFICERS OR AGENTS SHALL NOT BE RESPONSIBLE FOR THE ACCURACY OR COMPLETENESS OF SCANNED COPIES OF THIS PLAN SHEET.

TO ACCOMPANY PLANS DATED _____

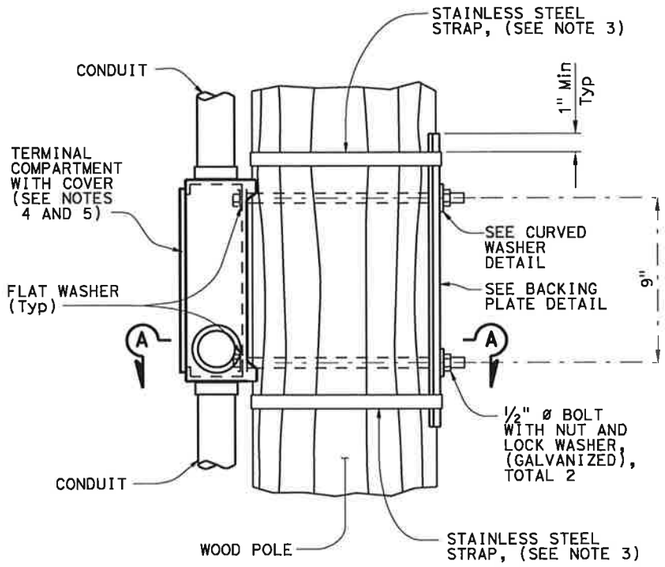

ELEVATION

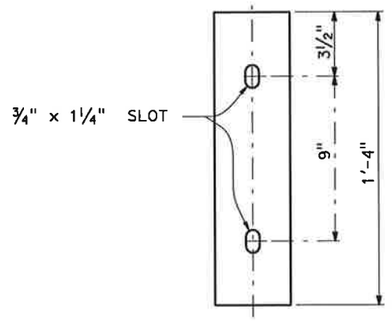

ELEVATION

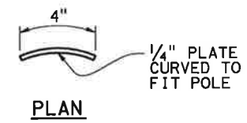

PLAN

BACKING PLATE DETAIL

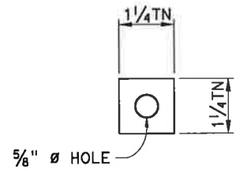

ELEVATION

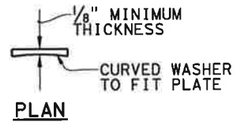

PLAN

CURVED WASHER DETAIL

NOTES:

1. Verify pole dimensions at terminal compartment for fabrication of backing plate and curved washer.
2. Backing plate to be galvanized after fabrication.
3. 3/4" x 0.044" minimum, rounded edge stainless steel straps, double wrapped with 2" long bend under stainless steel strap buckle.
4. For miscellaneous details for signal mounting not shown see Standard Plan ES-4D.
5. If the terminal compartment has a cable entry guide on the rear face, remove the cable entry guide to a level that will not interfere with the wood post. Close any unused cable entry locations with raintight cap.

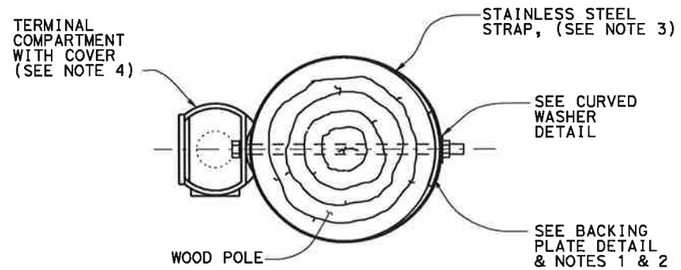

SECTION A-A

SIDE MOUNTING
TERMINAL COMPARTMENT

STATE OF CALIFORNIA
DEPARTMENT OF TRANSPORTATION

TEMPORARY WOOD POLES DETAILS No. 4

NO SCALE

RSP ES-19D DATED JANUARY 20, 2017 SUPPLEMENTS THE STANDARD PLANS BOOK DATED 2015.

REVISED STANDARD PLAN RSP ES-19D

2015 REVISED STANDARD PLAN RSP ES-19D

11-22-16

© 2017 California Department of Transportation
All Rights Reserved

Dist	COUNTY	ROUTE	POST MILES TOTAL PROJECT	SHEET No.	TOTAL SHEETS
04	SCL	101,237	45.2/45.8, 2.7/3.3	677	736

REGISTERED CIVIL ENGINEER

January 20, 2017
PLANS APPROVAL DATE

REGISTERED PROFESSIONAL ENGINEER — Stanley P. Johnson — No. C57793 — Exp. 3-31-18 — CIVIL — STATE OF CALIFORNIA

THE STATE OF CALIFORNIA OR ITS OFFICERS OR AGENTS SHALL NOT BE RESPONSIBLE FOR THE ACCURACY OR COMPLETENESS OF SCANNED COPIES OF THIS PLAN SHEET.

TO ACCOMPANY PLANS DATED _____

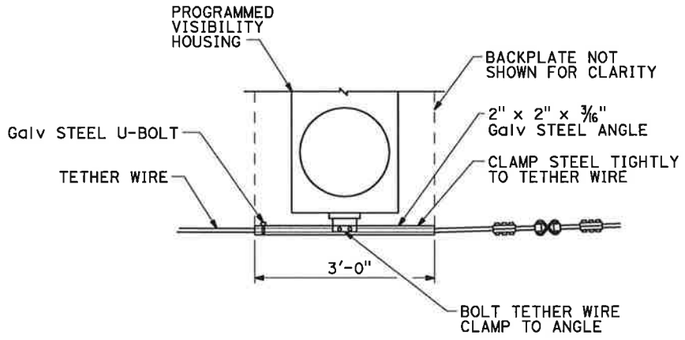

TETHER WIRE ATTACHMENT FOR PROGRAMMED VISIBILITY SIGNAL FACE

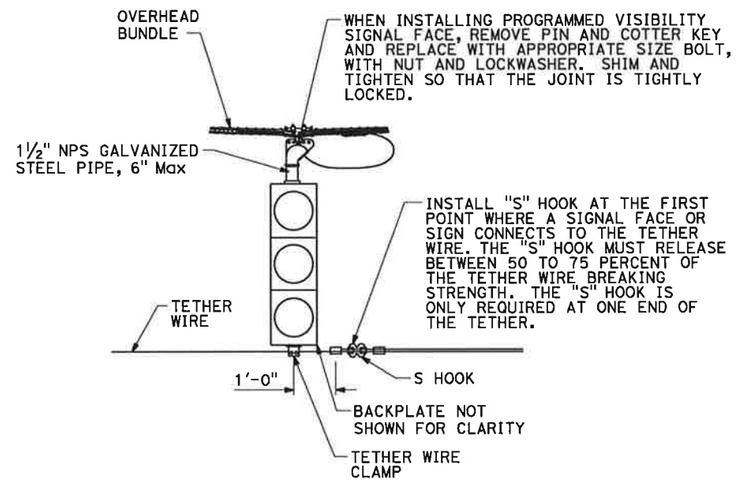

SIGNAL FACE SUPPORT

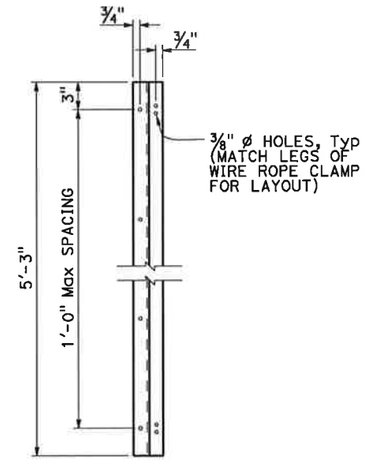

Z-BAR ELEVATION

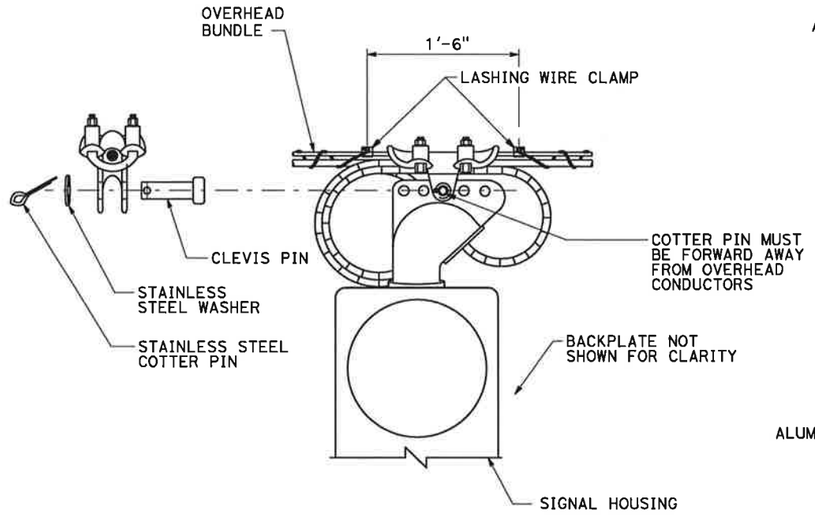

MESSENGER WIRE CLAMP COTTER PIN DETAIL

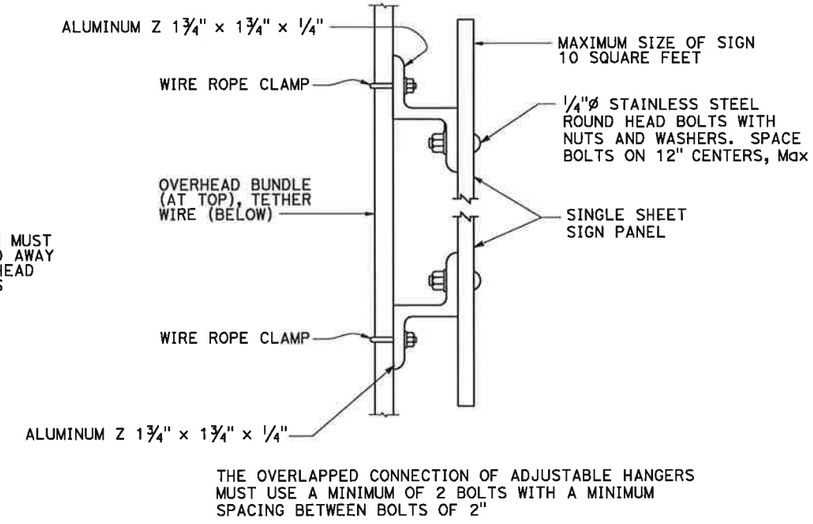

THE OVERLAPPED CONNECTION OF ADJUSTABLE HANGERS MUST USE A MINIMUM OF 2 BOLTS WITH A MINIMUM SPACING BETWEEN BOLTS OF 2"

SIGN MOUNTING DETAIL

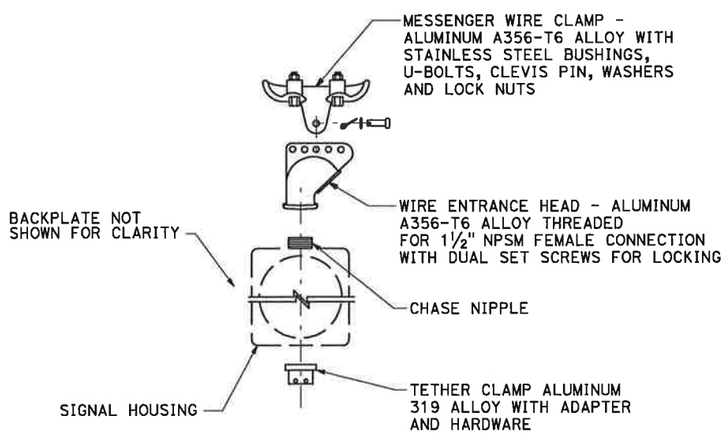

SIGNAL FACE SUPPORT EXPLODED VIEW

STATE OF CALIFORNIA
DEPARTMENT OF TRANSPORTATION

TEMPORARY WOOD POLES DETAILS No. 5

NO SCALE

RSP ES-19E DATED JANUARY 20, 2017 SUPPLEMENTS THE STANDARD PLANS BOOK DATED 2015.

REVISED STANDARD PLAN RSP ES-19E

2015 REVISED STANDARD PLAN RSP ES-19E

11-22-16

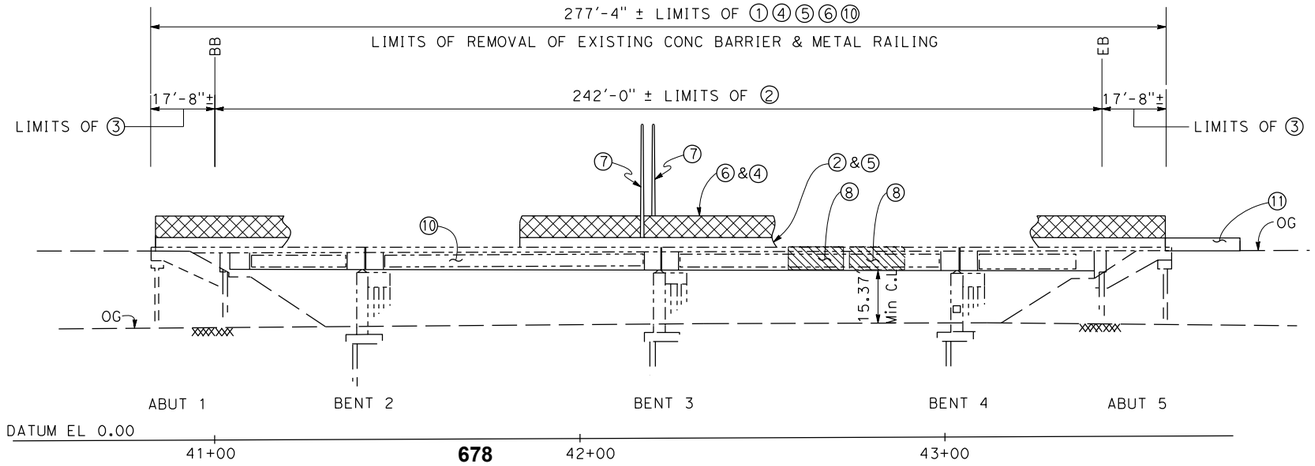

ELEVATION
1"=20'

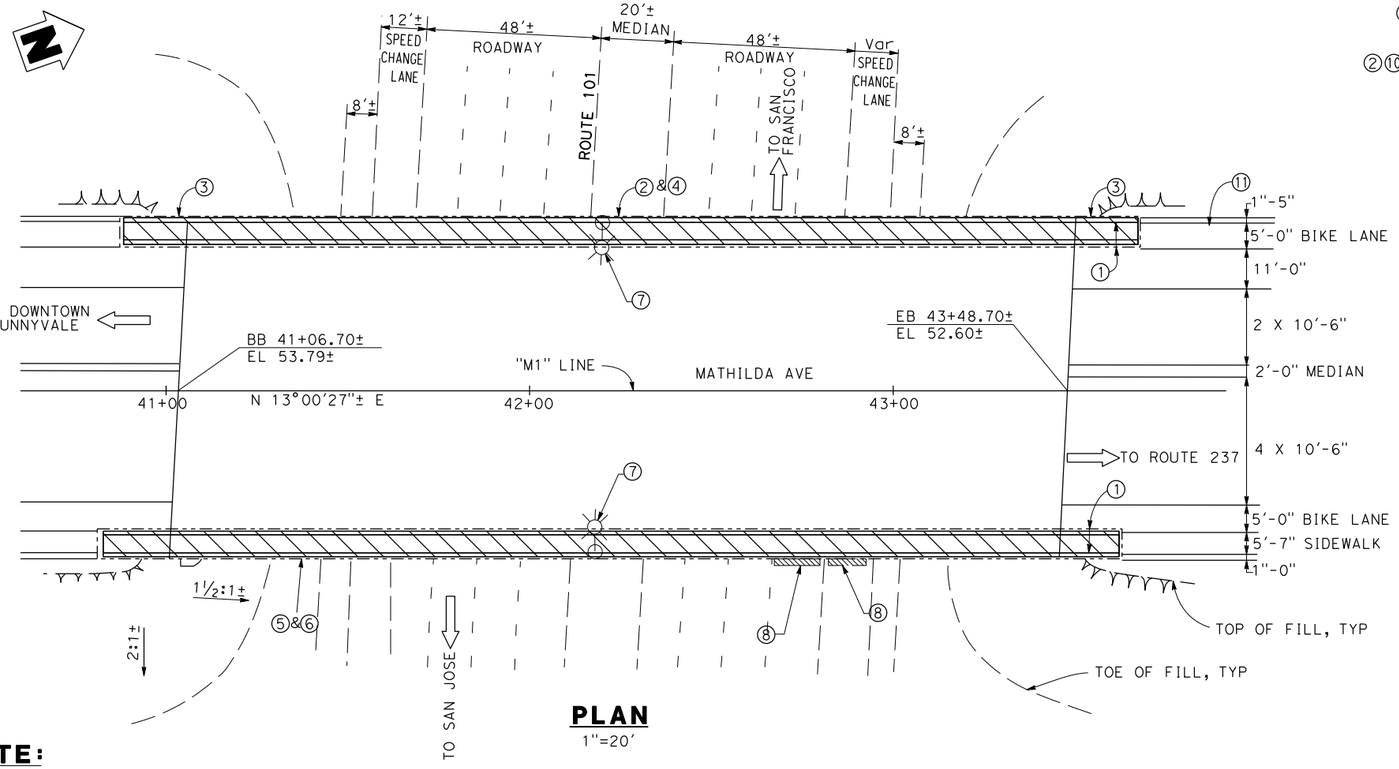

PLAN
1"=20'

NOTE:
The Contractor shall verify all controlling field dimensions before ordering a fabricating any material

STANDARD PLANS DATED 2015

A3A Abbreviations (Sheet 1 of 3)
A3B Abbreviations (Sheet 2 of 3)
A3C Abbreviations (Sheet 3 of 3)
A10A Legend - Lines and Symbols (Sheet 1 of 5)
A10B Legend - Lines and Symbols (Sheet 2 of 5)
A10C Legend - Lines and Symbols (Sheet 3 of 5)
A10D Legend - Lines and Symbols (Sheet 4 of 5)
A10E Legend - Lines and Symbols (Sheet 5 of 5)
RSP B11-52 Chain Link Railing Type 7
RSP B11-56 Concrete Barrier Type 736
RSP B11-58 Concrete Barrier Type 732SW (Sheet 1 of 2)
RSP B11-59 Concrete Barrier Type 732SW (Sheet 2 of 2)

DIST	COUNTY	ROUTE	POST MILES TOTAL PROJECT	SHEET No	TOTAL SHEETS
04	SCL	101,237	45.2/45.8 2.7/3.3	678	736

5/11/18
REGISTERED CIVIL ENGINEER — DATE

6-20-18
PLANS APPROVAL DATE

REGISTERED PROFESSIONAL ENGINEER — GUOPING XU — No. 63977 — Exp. 9/30/2020 — CIVIL — STATE OF CALIFORNIA

The State of California or its officers or agents shall not be responsible for the accuracy or completeness of scanned copies of this plan sheet.

WMH CORPORATION
50 West San Fernando Street, Suite 950
San Jose, CA 95113

VTA
3331 N First St
Building B
San Jose, Ca 95134

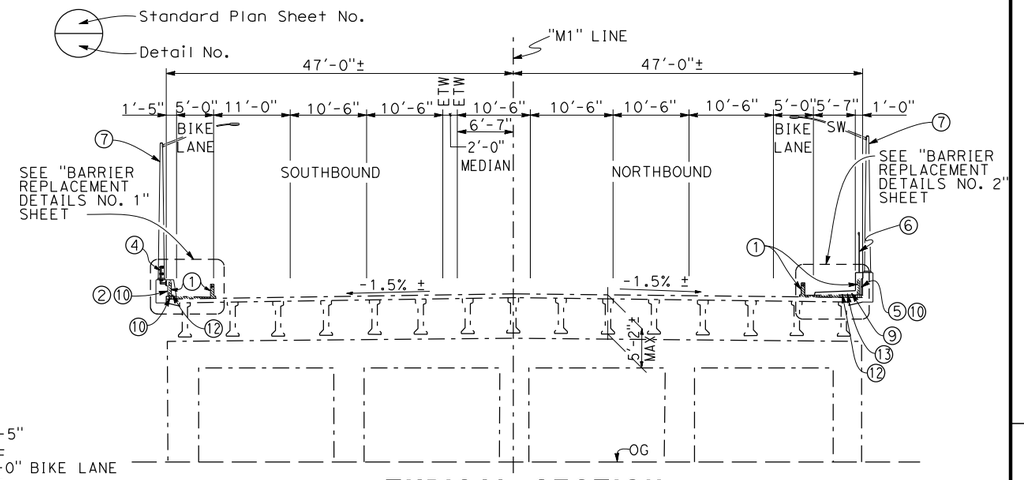

TYPICAL SECTION
1"=10'

INDEX TO PLANS

No.	Title
1	General Plan
2	Barrier Replacement Details No. 1
3	Barrier Replacement Details No. 2
4	Tubular Bicycle Railing Details
5	Aesthetic Treatment Details
6	Sign Structure Removal Details
7	Barrier Removal Details

LEGEND:

REMOVE CONCRETE BARRIER, SIDEWALK, METAL RAILING AND SIGN STRUCTURES

NEW ELECTROLLIER

NOTES:

① REMOVE EXISTING CONCRETE BARRIER, ELECTROLLIERS, SIDEWALK AND METAL RAILING
② CONSTRUCT CONCRETE BARRIER TYPE 736 (Mod)
③ CONCRETE BARRIER TYPE 736A (Mod)
④ TUBULAR BICYCLE RAILING
⑤ CONSTRUCT CONCRETE BARRIER TYPE 732SW (Mod)
⑥ INSTALL CHAIN LINK RAILING TYPE 7 BLACK VINYL CLAD
⑦ NEW ELECTROLIERS, Tot 2
⑧ REMOVE TWO EXISTING BRIDGE MOUNTED SIGN STRUCTURES
⑨ 2" DIAMETER RAMP METERING CONDUIT, SEE ELECTRICAL PLANS
⑩ FRACTURED RIB TEXTURE
⑪ CONCRETE BARRIER TYPE 736B (Mod), SEE ROADWAY PLANS
⑫ 2" DIAMETER STREET LIGHT CONDUIT, SEE ELECTRICAL PLANS
⑬ 3" FIBER OPTICS COMMUNICATION CONDUIT, SEE ELECTRICAL PLANS

	BY	CHECKED
DESIGN	G. XU	S. FU
DETAILS	C. HUA	S. HAAS
QUANTITIES	G. XU	S. FU

LOAD & RESISTANCE FACTOR DESIGN — LIVE LOADING:

	BY	CHECKED
LAYOUT	S. LOUPE	G. XU
SPECIFICATIONS	S. HAAS	PLANS AND SPECS COMPARED: S. HAAS

Shuoshy Li
DESIGN OVERSIGHT
5-11-2018
SIGN OFF DATE

PREPARED FOR THE STATE OF CALIFORNIA
DEPARTMENT OF TRANSPORTATION

STEVE LOUPE
PROJECT ENGINEER

BRIDGE NO. 33-0177
POST MILES X

MATHILDA AVE OC BARRIER REPLACEMENT
GENERAL PLAN

DESIGN GENERAL PLAN SHEET (ENGLISH) (REV. 03/14/12)

ORIGINAL SCALE IN INCHES FOR REDUCED PLANS 0 1 2 3

UNIT: 0000
PROJECT NUMBER & PHASE: 0413000204 CONTRACT NO.: S13089

DISREGARD PRINTS BEARING EARLIER REVISION DATES →

REVISION DATES				SHEET	OF
1/3/18				1	7

FILE => 03-0177-a-gp.dgn

USERNAME => eliff DATE PLOTTED => 12/3/2018 TIME PLOTTED => 12:30:11 PM

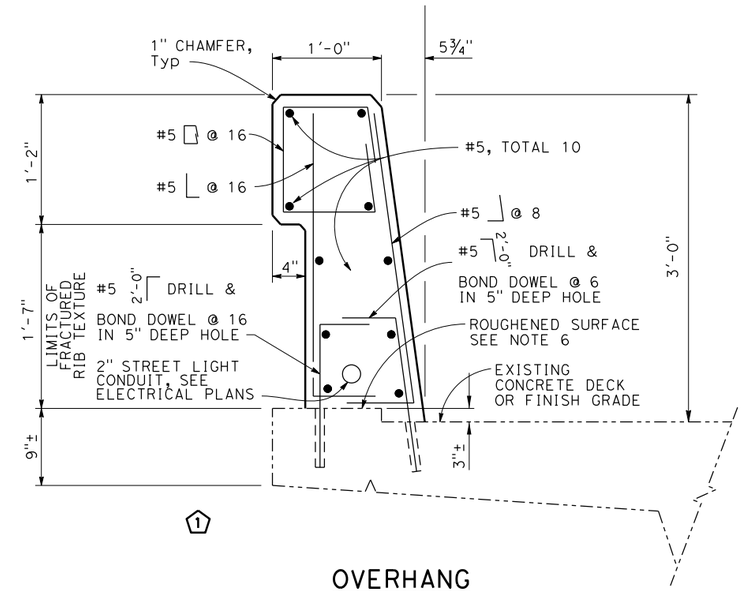

OVERHANG
NO SCALE

Note: Overhang Bridge Deck shown, Slab Bridge Deck similar.

NOTES:

1. Avoid existing reinforcement when drilling.
2. Dimensions may vary with roadway cross slope and with certain thickness of surfacing. See Project Plans.
3. Clearance to reinforcing steel in barrier to be 1", except as noted. Longitudinal reinforcement to stop at all expansion joints.
4. For typical metal railing connection details not shown, see Standard Plans A77J1 and A77J2.
5. See Standard Plans ES-9A, ES-9B, ES-9C, ES-9D and ES-9E for electrical details. The maximum number of conduits in the barrier is limited to two 2" conduits along with one 3" conduit. When a 3" conduit is used, it is restricted to the base of the barrier.
6. Roughen existing bridge deck surface before casting new concrete against existing concrete.
7. Taper the top of the end of the bridge railing at 4:1 to match the top elevation of the thrie beam rail element. Special design might be needed for nontypical situation.
9. For electrolier mounting details, see Standard Plans ES-6A and ES-6B.
10. Corbel shall be placed and cured before barrier drill and bond installation.

DESIGN NOTES:

DESIGN: AASHTO LRFD Bridge Design Specifications, 4th Edition with California Amendments

CT: 54 kip maximum traffic impact loading evenly distributed over 10 feet at top of the barrier and 1:1 distribution down and outward

Reinforced Concrete:

New	Existing
f'c = 3.6 Ksi	f'c = 3.6 Ksi
fy = 60 Ksi	fy = 60 Ksi

DIST	COUNTY	ROUTE	POST MILES TOTAL PROJECT	SHEET No.	TOTAL SHEETS
04	SCL	101, 237	45.2/45.8 2.7/3.3	679	736

5/11/18
REGISTERED CIVIL ENGINEER — DATE

6-20-18
PLANS APPROVAL DATE

REGISTERED PROFESSIONAL ENGINEER — GUOPING XU — No. 63977 — Exp. 9/30/2020 — CIVIL — STATE OF CALIFORNIA

The State of California or its officers or agents shall not be responsible for the accuracy or completeness of scanned copies of this plan sheet.

The Registered Civil Engineer for the project is responsible for the selection and proper application of the component design and any modifications shown.

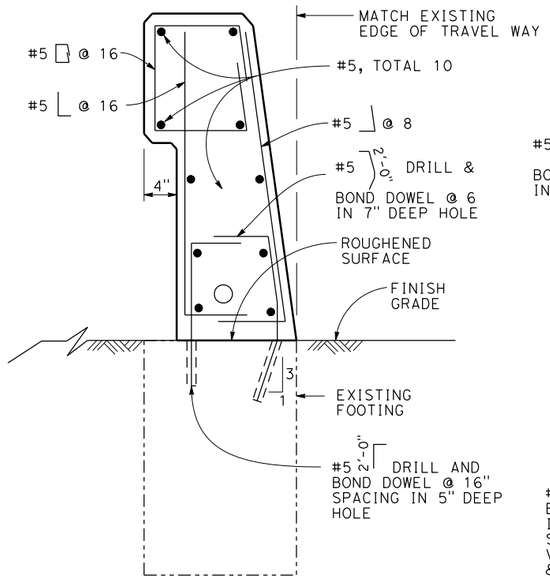

TYPE 736B (Mod)
NO SCALE

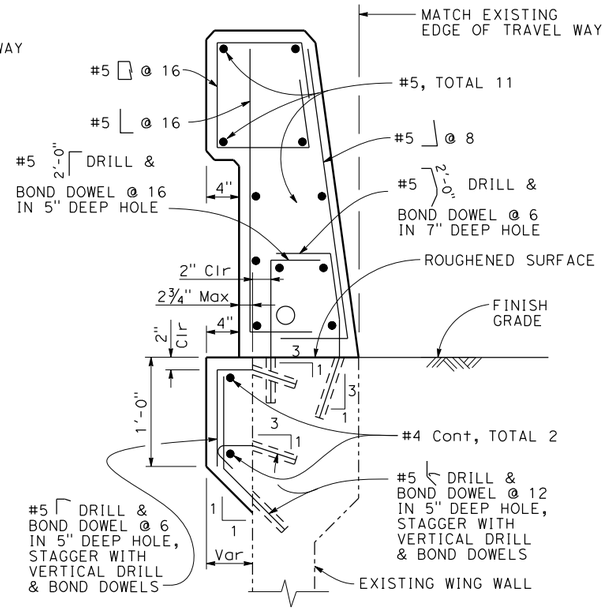

TYPE 736A, OPTION 1
NO SCALE

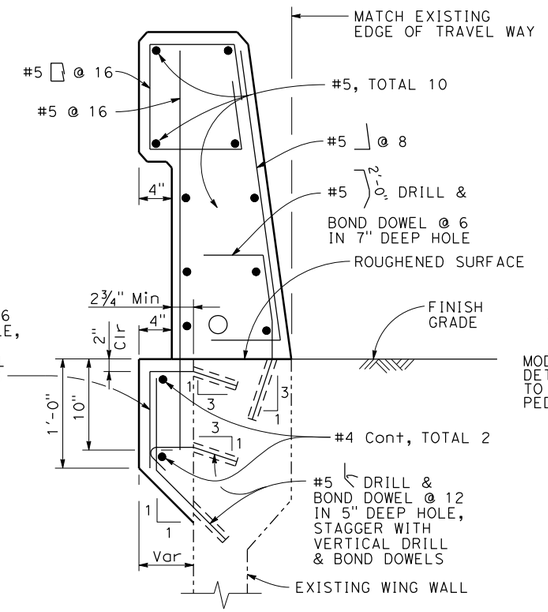

TYPE 736A, OPTION 2
NO SCALE

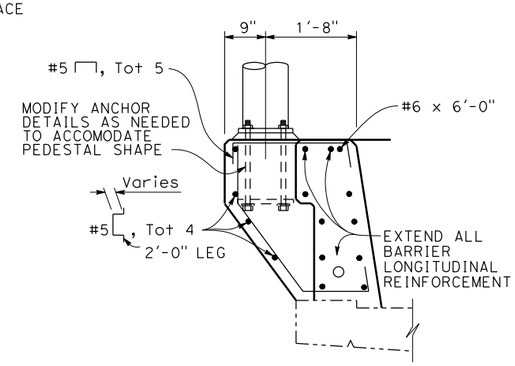

PEDESTAL ELEVATION
NO SCALE

BRIDGE STANDARD DETAILS			MODIFICATIONS SHOWN:	STATE OF CALIFORNIA DEPARTMENT OF TRANSPORTATION	DIVISION OF ENGINEERING SERVICES	BRIDGE NO.	MATHILDA AVE OC BARRIER REPLACEMENT
xs16-045 FILE NO.	October 2014 APPROVAL DATE	The components of the Bridge Standard Details have been prepared under the responsible charge of the Technical Owner, a registered civil engineer in the State of California	(1) DETAIL MODIFIED			33-0177 POST MILE X	BARRIER REPLACMENT DETAILS NO. 1

Refer to: http://www.dot.ca.gov/hq/esc/techpubs/manual/bridgemanuals/bridge-standard-detail-sheets/index.html

FILE => 03-0177-g-dt101.dgn
USERNAME => eilif TIME PLOTTED => 12:30:13 PM DATE PLOTTED => 12/3/2018

ORIGINAL SCALE IN INCHES FOR REDUCED PLANS 0 1 2 3

UNIT: PROJECT NUMBER & PHASE: CONTRACT NO.:

DISREGARD PRINTS BEARING EARLIER REVISION DATES →

REVISION DATES				SHEET	OF
9-18-14	9-22-14	7-14-16		2	7

DIST	COUNTY	ROUTE	POST MILES TOTAL PROJECT	SHEET No	TOTAL SHEETS
04	SCL	101,237	45.2/45.8 2.7/3.3	680	736

5/11/18
REGISTERED CIVIL ENGINEER — DATE

6-20-18
PLANS APPROVAL DATE

REGISTERED PROFESSIONAL ENGINEER
GUOPING XU
No. 63977
Exp. 9/30/2018
CIVIL
STATE OF CALIFORNIA

The State of California or its officers or agents shall not be responsible for the accuracy or completeness of scanned copies of this plan sheet.

WMH CORPORATION
50 West San Fernando Street, Suite 950
San Jose, CA 95113

VTA
3331 N First St
Building B
San Jose, Ca 95134

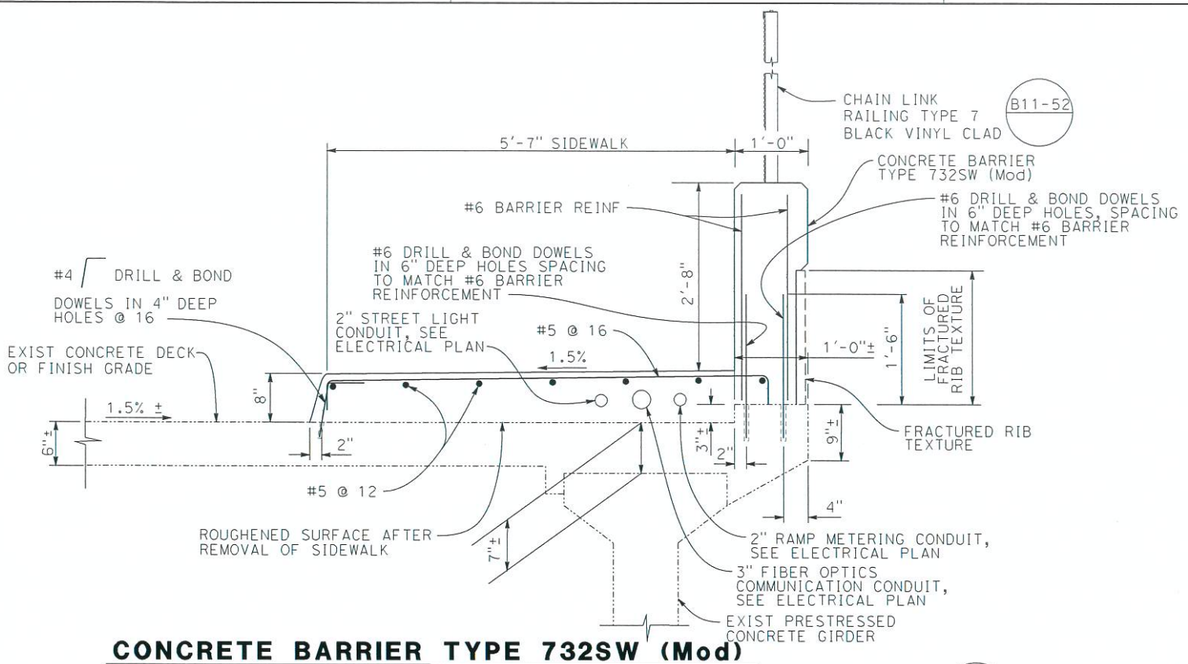

CONCRETE BARRIER TYPE 732SW (Mod) AT BRIDGE DECK

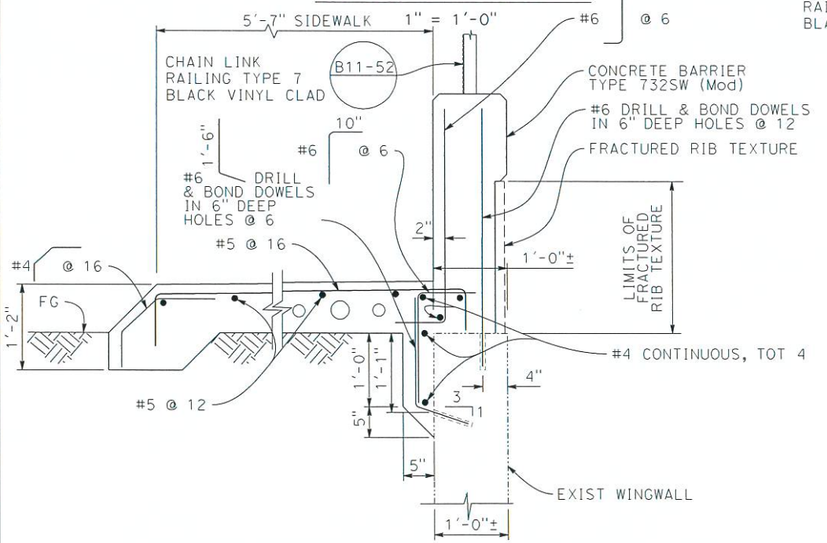

CONCRETE BARRIER 732SW (Mod) AT WINGWALL

1" = 1'-0"

NOTE:

The Contractor shall verify all controlling field dimensions before ordering a fabricating any material

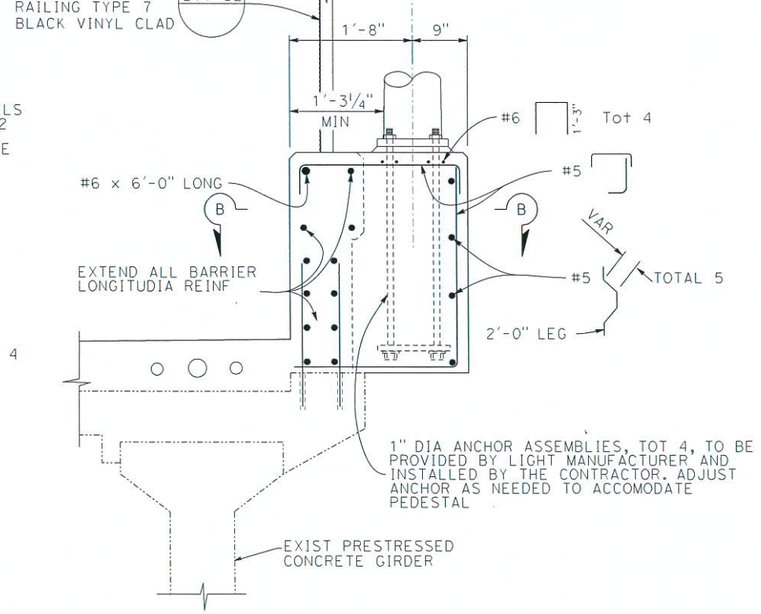

PEDESTAL DETAIL AT BARRIER TYPE 732SW (Mod)

1" = 1'-0"

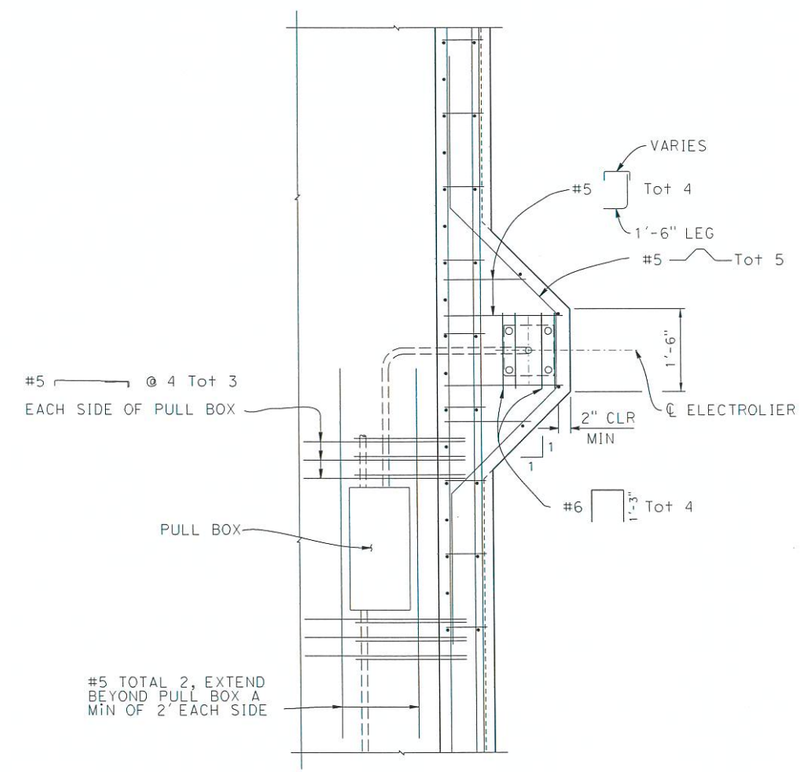

SECTION B-B

1" = 1'-0"

NOTE:
FOR DETAILS NOT SHOWN, SEE REVISED STANDARD PLAN B11-58 & B11-59.

DESIGN OVERSIGHT
5-11-2018
SIGN OFF DATE

DESIGN DETAIL SHEET (ENGLISH) (REV. 03/14/12)

	BY	CHECKED
DESIGN	G. XU	S. FU
DETAILS	C. HUA	S. HAAS
QUANTITIES	G. XU	S. FU

ORIGINAL SCALE IN INCHES FOR REDUCED PLANS: 0 1 2 3

PREPARED FOR THE STATE OF CALIFORNIA DEPARTMENT OF TRANSPORTATION

STEVE LOUPE
PROJECT ENGINEER

BRIDGE NO. 33-0177
POST MILES X

MATHILDA AVE OC BARRIER REPLACEMENT
BARRIER REPLACEMENT DETAILS NO. 2

UNIT: 0000
PROJECT NUMBER & PHASE: 0413000204
CONTRACT NO.: S13089

DISREGARD PRINTS BEARING EARLIER REVISION DATES →

REVISION DATES				SHEET	OF
1/3/18				3	7

FILE => 03-0177-g-dt102.dgn

USERNAME => chua
DATE PLOTTED => 12/21/2017
TIME PLOTTED => 10:55:03 PM

DIST	COUNTY	ROUTE	POST MILES TOTAL PROJECT	SHEET No.	TOTAL SHEETS
04	SCL	101, 237	45.2/45.8 2.7/3.3	681	736

REGISTERED CIVIL ENGINEER — DATE 5/11/18

6-20-18
PLANS APPROVAL DATE

REGISTERED PROFESSIONAL ENGINEER — GUOPING XU — No. 63977 — Exp. 9/30/2018 — CIVIL — STATE OF CALIFORNIA

The State of California or its officers or agents shall not be responsible for the accuracy or completeness of scanned copies of this plan sheet.

The Registered Civil Engineer for the project is responsible for the selection and proper application of the component design and any modifications shown.

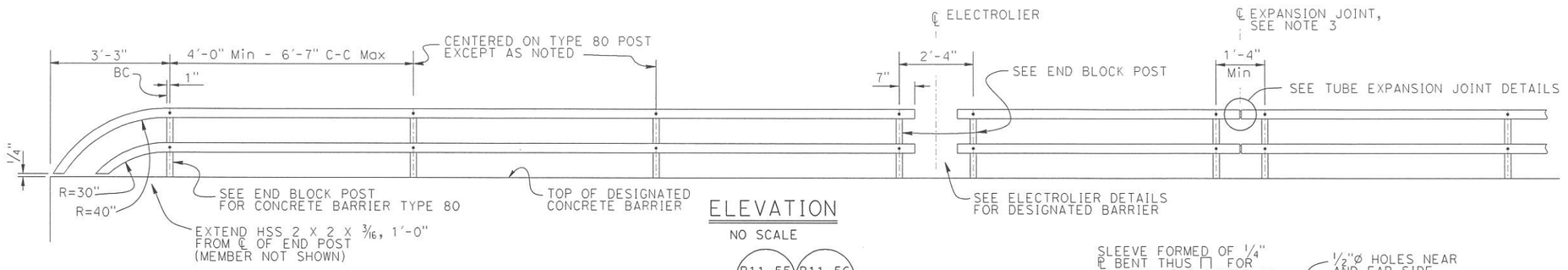

ELEVATION
NO SCALE

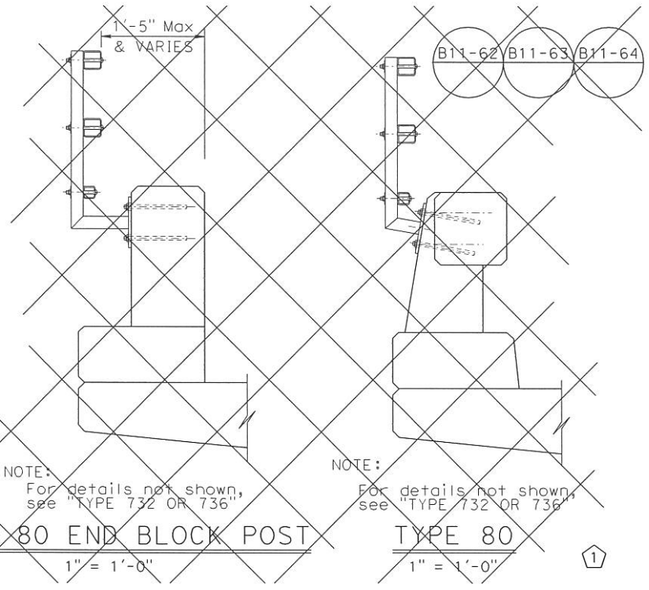

TYPE 80 END BLOCK POST
1" = 1'-0"

TYPE 80
1" = 1'-0" (1)

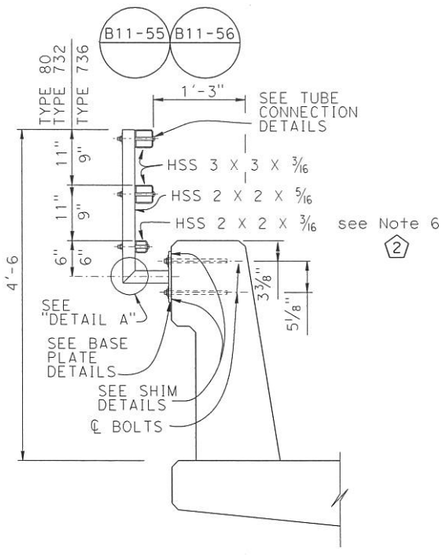

TYPE 732 OR 736
1" = 1'-0"

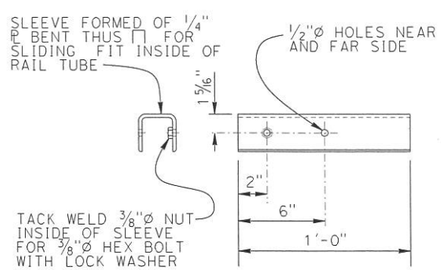

SLEEVE DETAIL
NO SCALE

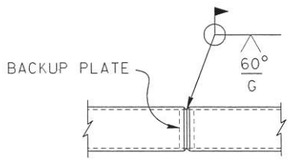

WELDED SPLICE DETAIL
NO SCALE

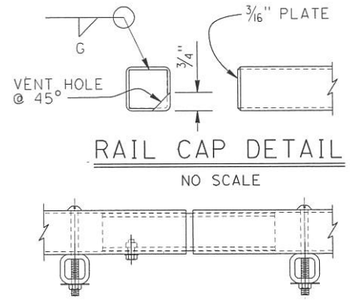

RAIL CAP DETAIL
NO SCALE

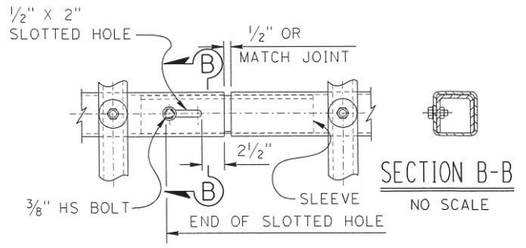

SECTION B-B
NO SCALE

TUBE EXPANSION JOINT DETAILS
NO SCALE

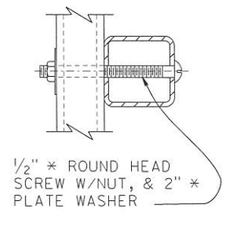

TUBE CONNECTION DETAIL
NO SCALE

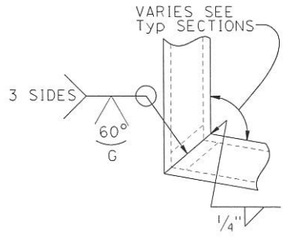

DETAIL A
NO SCALE

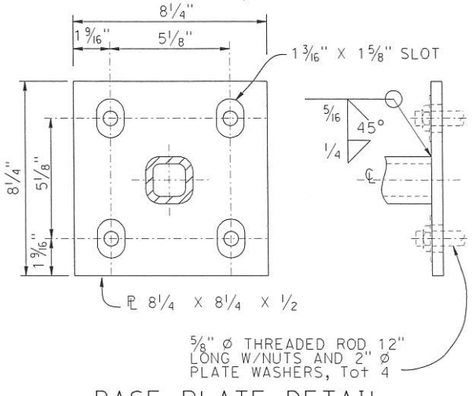

BASE PLATE DETAIL
NO SCALE

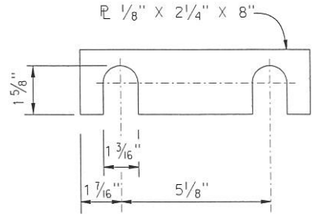

SHIM DETAILS
NO SCALE

NOTES:

1. Post must be normal to railing.
2. Rail tubes must be shop bent or fabricated to fit horizontal curve when radius is less than 950'.
3. Tube expansion joints must be located in the tubes spanning deck or wall joints. Increase joint width in tubes to match expansion joint width and increase sleeve length correspondingly.
4. Top rail tube must be continuous over not less than two posts except a short post spacing is permitted near deck or wall joints, electroliers, or other rail discontinuities as noted.
5. See Project Plans for limits of tubular bicycle railing.
6. (2) Terminate bottom rail as needed at the eleectrollier pedestals.

BRIDGE STANDARD DETAILS

xs16-035	October 2014	The components of the Bridge Standard Details have been prepared under the responsible charge of the Technical Owner, a registered civil engineer in the State of California
FILE NO.	APPROVAL DATE	

Refer to: http://www.dot.ca.gov/hq/esc/techpubs/manual/bridgemanuals/bridge-standard-detail-sheets/index.html

MODIFICATIONS SHOWN:
(1) DETAIL DELETED (2) NOTE 6 ADDED

FILE => 03-0177-h-tbr.dgn
USERNAME => chua TIME PLOTTED => 10:55:04 PM DATE PLOTTED => 12/21/2017

ORIGINAL SCALE IN INCHES FOR REDUCED PLANS 0 1 2 3

STATE OF CALIFORNIA
DEPARTMENT OF TRANSPORTATION

DIVISION OF ENGINEERING SERVICES

UNIT: 0000
PROJECT NUMBER & PHASE: 0413000204 CONTRACT NO.: S13089

BRIDGE NO. 33-0177
POST MILE

MATHILDA AVE OC BARRIER REPLACEMENT
TUBULAR BICYCLE RAILING DETAILS

DISREGARD PRINTS BEARING EARLIER REVISION DATES →

REVISION DATES			SHEET	OF
8-7-12	10-1-14	7-14-16	4	7

DIST	COUNTY	ROUTE	POST MILES TOTAL PROJECT	SHEET No	TOTAL SHEETS
04	SCL	101,237	45.2/45.8 2.7/3.3	682	736

REGISTERED CIVIL ENGINEER — DATE 5/11/18

REGISTERED PROFESSIONAL ENGINEER — GUOPING XU — No. 63977 — Exp. 9/30/2018 — CIVIL — STATE OF CALIFORNIA

6-20-18
PLANS APPROVAL DATE

The State of California or its officers or agents shall not be responsible for the accuracy or completeness of scanned copies of this plan sheet.

WMH CORPORATION
50 West San Fernando Street, Suite 950
San Jose, CA 95113

VTA
3331 N First St
Building B
San Jose, Ca 95134

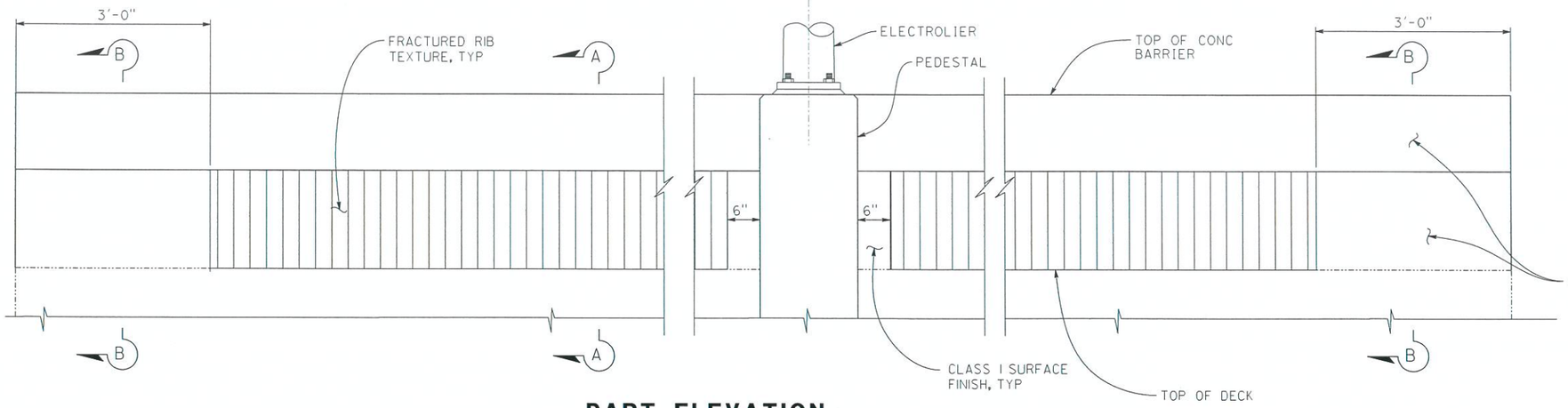

PART ELEVATION
1" = 1'-0"

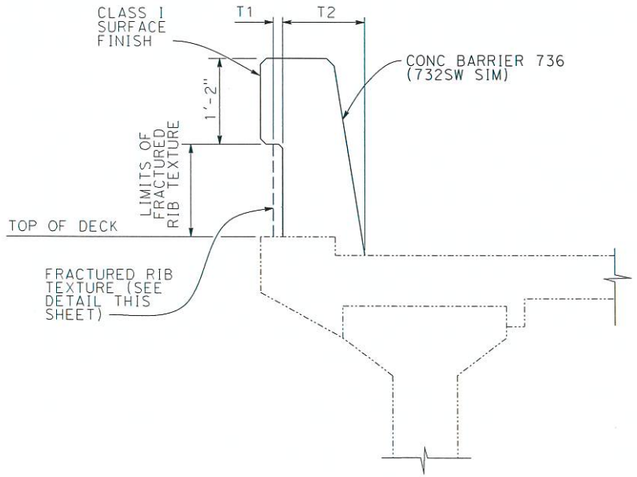

SECTION A-A
1" = 1'-0"

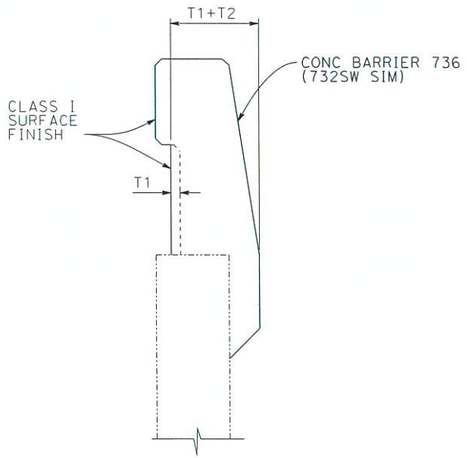

SECTION B-B
1" = 1'-0"

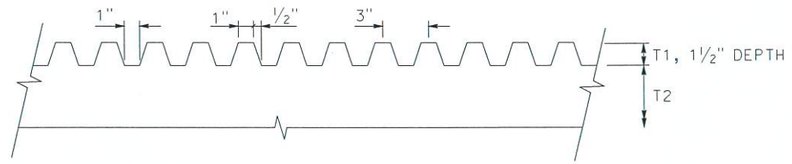

FRACTURED RIB TEXTURE
3"=1'-0"

T1 = DEPTH OF FRACTURED RIB TEXTURE
T2 = CONC BARRIER STRUCTURAL THICKNESS

NOTE:
The Contractor shall verify all controlling field dimensions before ordering a fabricating any material

DESIGN OVERSIGHT — SIGN OFF DATE 5-11-2018

	BY	CHECKED
DESIGN	G. XU	S. FU
DETAILS	C. HUA	S. HAAS
QUANTITIES	G. XU	S. FU

PREPARED FOR THE STATE OF CALIFORNIA DEPARTMENT OF TRANSPORTATION

STEVE LOUPE — PROJECT ENGINEER

BRIDGE NO. 33-0177 — POST MILES X

MATHILDA AVE OC BARRIER REPLACEMENT
AESTHETIC TREATMENT DETAILS

DESIGN DETAIL SHEET (ENGLISH) (REV. 03/14/12)

ORIGINAL SCALE IN INCHES FOR REDUCED PLANS 0 1 2 3

UNIT: 0000
PROJECT NUMBER & PHASE: 0413000204 CONTRACT NO.: 513089

DISREGARD PRINTS BEARING EARLIER REVISION DATES →

REVISION DATES				SHEET	OF
1/3/18				5	7

FILE => 03-0177-y-atdt1.dgn

DATE PLOTTED => 12/21/2017 TIME PLOTTED => 10:55:05 PM
USERNAME => chua

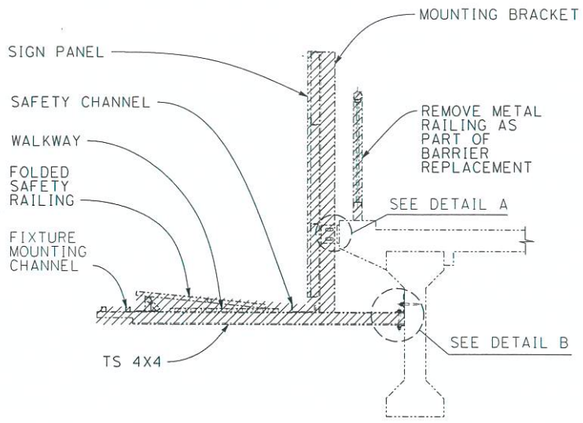

TYPICAL MOUNTING BRACKET ASSEMBLY

1/2"=1'-0"

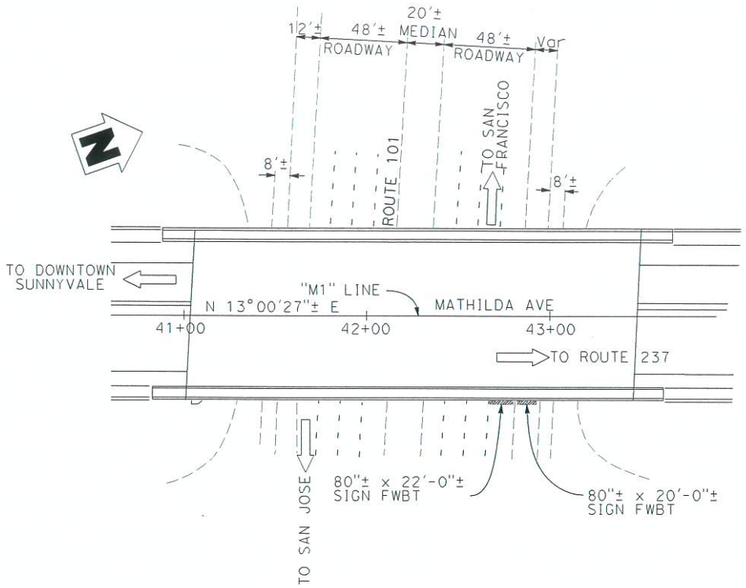

LOCATION PLAN

1"=40'

LEGEND:

REMOVE SIGN STRUCTURE

EXISTING SIGN STRUCTURE ASSEMBLIES

DIST	COUNTY	ROUTE	POST MILES TOTAL PROJECT	SHEET No	TOTAL SHEETS
04	SCL	101,237	45.2/45.8 2.7/3.3	683	736

REGISTERED CIVIL ENGINEER — DATE 5/11/18

REGISTERED PROFESSIONAL ENGINEER — GUOPING XU — No. 63977 — Exp. 9/30/2018 — CIVIL — STATE OF CALIFORNIA

6-20-18
PLANS APPROVAL DATE

The State of California or its officers or agents shall not be responsible for the accuracy or completeness of scanned copies of this plan sheet.

WMH CORPORATION
50 West San Fernando Street, Suite 950
San Jose, CA 95113

VTA
3331 N First St
Building B
San Jose, Ca 95134

REMOVE ANCHOR BOLT AT LEAST 2" FROM FACE OF CONCRETE AND PATCH THE HOLE AFTERWARDS

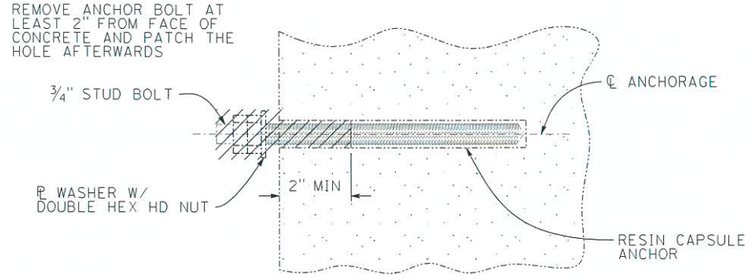

ANCHOR BOLT REMOVAL

6"=1'-0"

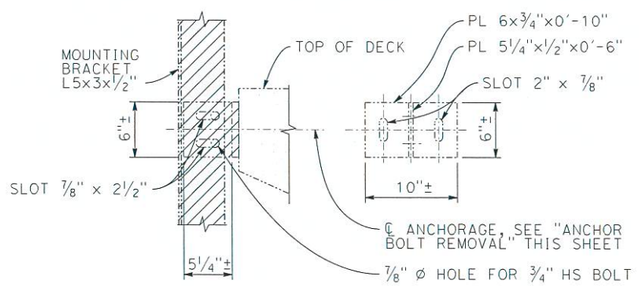

DETAIL A

1 1/2"=1'-0"

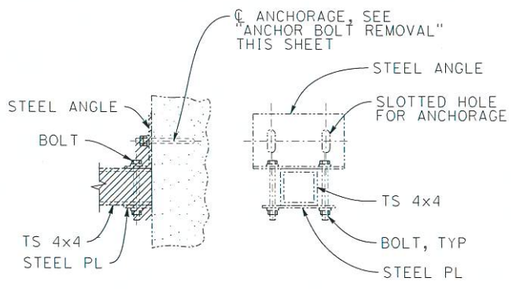

DETAIL B

1 1/2"=1'-0"

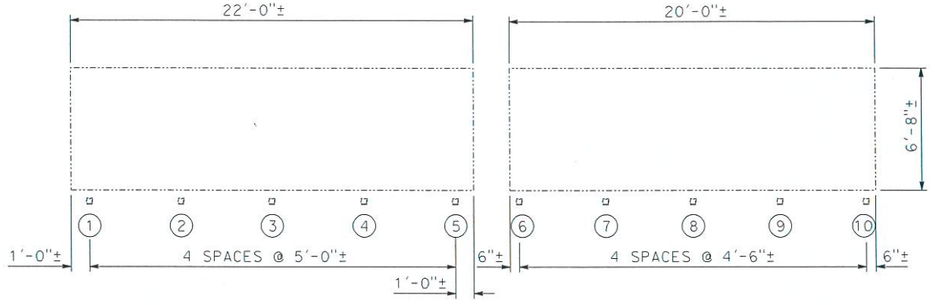

MOUNTING BRACKET ASSEMBLY SPACING

1/4"=1'-0"

NOTE:

The Contractor shall verify all controlling field dimensions before ordering a fabricating any material

DESIGN OVERSIGHT — SIGN OFF DATE 5-11-2018

	BY	CHECKED
DESIGN	G. XU	S. FU
DETAILS	C. HUA	S. HAAS
QUANTITIES	G. XU	S. FU

PREPARED FOR THE STATE OF CALIFORNIA DEPARTMENT OF TRANSPORTATION

STEVE LOUPE — PROJECT ENGINEER

BRIDGE NO. 33-0177 — POST MILES X

MATHILDA AVE OC BARRIER REPLACEMENT
SIGN STRUCTURE REMOVAL DETAILS

DESIGN DETAIL SHEET (ENGLISH) (REV. 03/14/12)

ORIGINAL SCALE IN INCHES FOR REDUCED PLANS 0 1 2 3

UNIT: 0000
PROJECT NUMBER & PHASE: 0413000204 CONTRACT NO.: S13089

DISREGARD PRINTS BEARING EARLIER REVISION DATES →

REVISION DATES	SHEET	OF
1/3/18	6	7

FILE => 03-0177-y-ssrdtl.dgn

DATE PLOTTED => 12/21/2017 TIME PLOTTED => 10:55:06 PM
USERNAME => chuo

DIST	COUNTY	ROUTE	POST MILES TOTAL PROJECT	SHEET No	TOTAL SHEETS
04	SCL	101,237	45.2/45.8 2.7/3.3	684	736

REGISTERED CIVIL ENGINEER — DATE 5/11/18

REGISTERED PROFESSIONAL ENGINEER — GUOPING XU — No. 63977 — Exp. 9/30/2018 — CIVIL — STATE OF CALIFORNIA

6-20-18
PLANS APPROVAL DATE

The State of California or its officers or agents shall not be responsible for the accuracy or completeness of scanned copies of this plan sheet.

WMH CORPORATION
50 West San Fernando Street, Suite 950
San Jose, CA 95113

VTA
3331 N First St
Building B
San Jose, Ca 95134

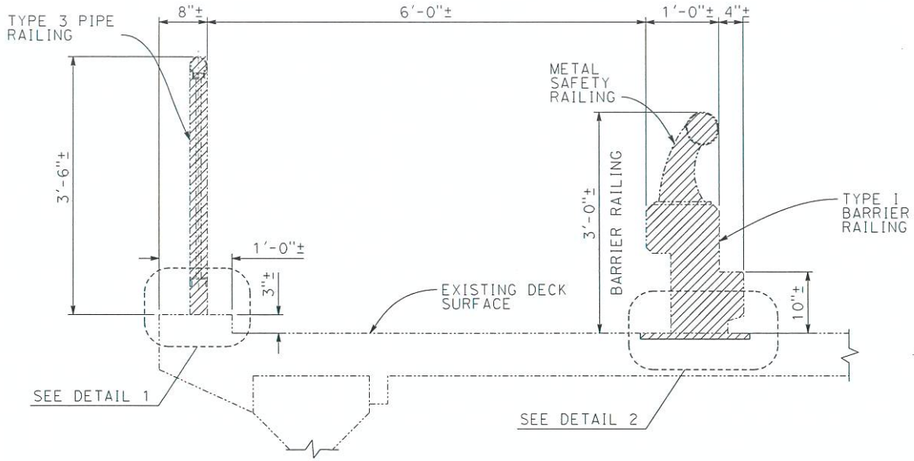

BARRIER REMOVAL (BOTH SIDES OF BRIDGE)

1" = 1'-0"

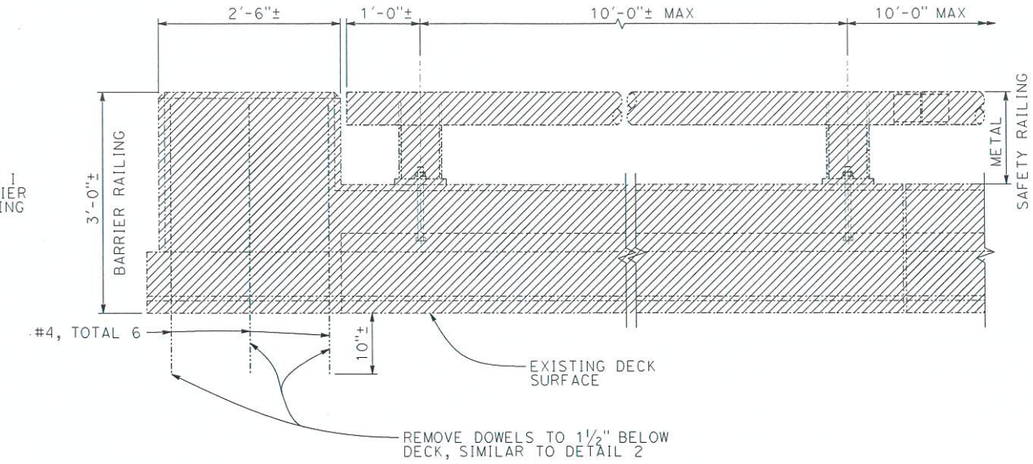

BARRIER RAILING & END POST ELEVATION

1" = 1'-0"

LEGEND:

REMOVE BARRIER RAILING & PIPE RAILING

EXISTING BARRIER RAILING & PIPE RAILING

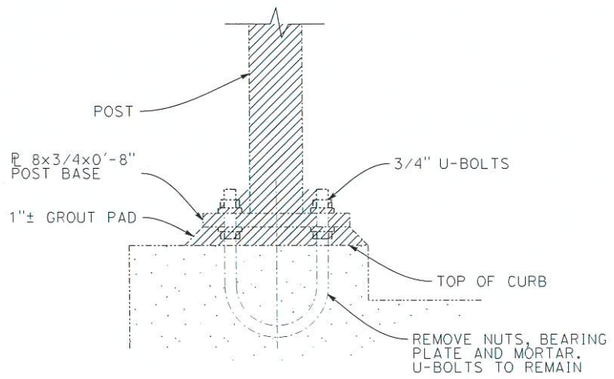

DETAIL 1

3" = 1'-0"

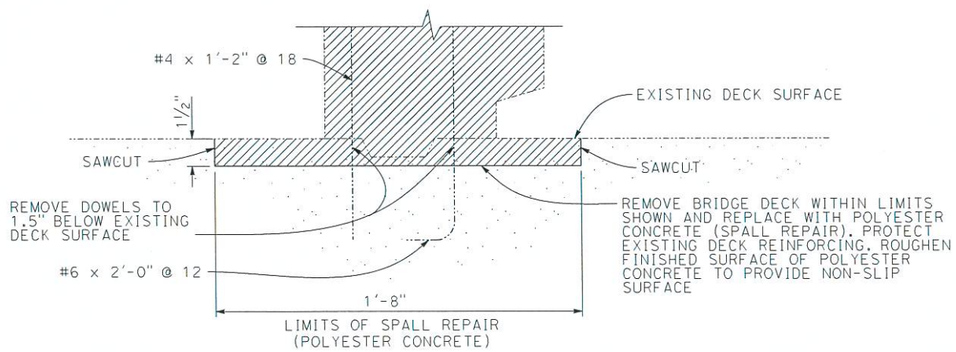

DETAIL 2

3" = 1'-0"

NOTE: DETAIL ON BRIDGE DECK SHOWN, DETAIL ON WING WALL SIMILAR.

NOTE:

The Contractor shall verify all controlling field dimensions before ordering a fabricating any material

DESIGN OVERSIGHT — SIGN OFF DATE 5-11-2018

	BY	CHECKED
DESIGN	G. XU	S. FU
DETAILS	C. HUA	S. HAAS
QUANTITIES	G. XU	S. FU

PREPARED FOR THE STATE OF CALIFORNIA DEPARTMENT OF TRANSPORTATION

STEVE LOUPE — PROJECT ENGINEER

BRIDGE NO. 33-0177 — POST MILES X

MATHILDA AVE OC BARRIER REPLACEMENT
BARRIER REMOVAL DETAILS

DESIGN DETAIL SHEET (ENGLISH) (REV. 03/14/12)

ORIGINAL SCALE IN INCHES FOR REDUCED PLANS 0 1 2 3

UNIT: 0000
PROJECT NUMBER & PHASE: 0413000204 CONTRACT NO.: S13089

DISREGARD PRINTS BEARING EARLIER REVISION DATES →

REVISION DATES	SHEET	OF
1/3/18	7	7

FILE => 03-0177-z-brdt101.dgn

DATE PLOTTED => 12/21/2017 TIME PLOTTED => 10:55:06 PM
USERNAME => chuo

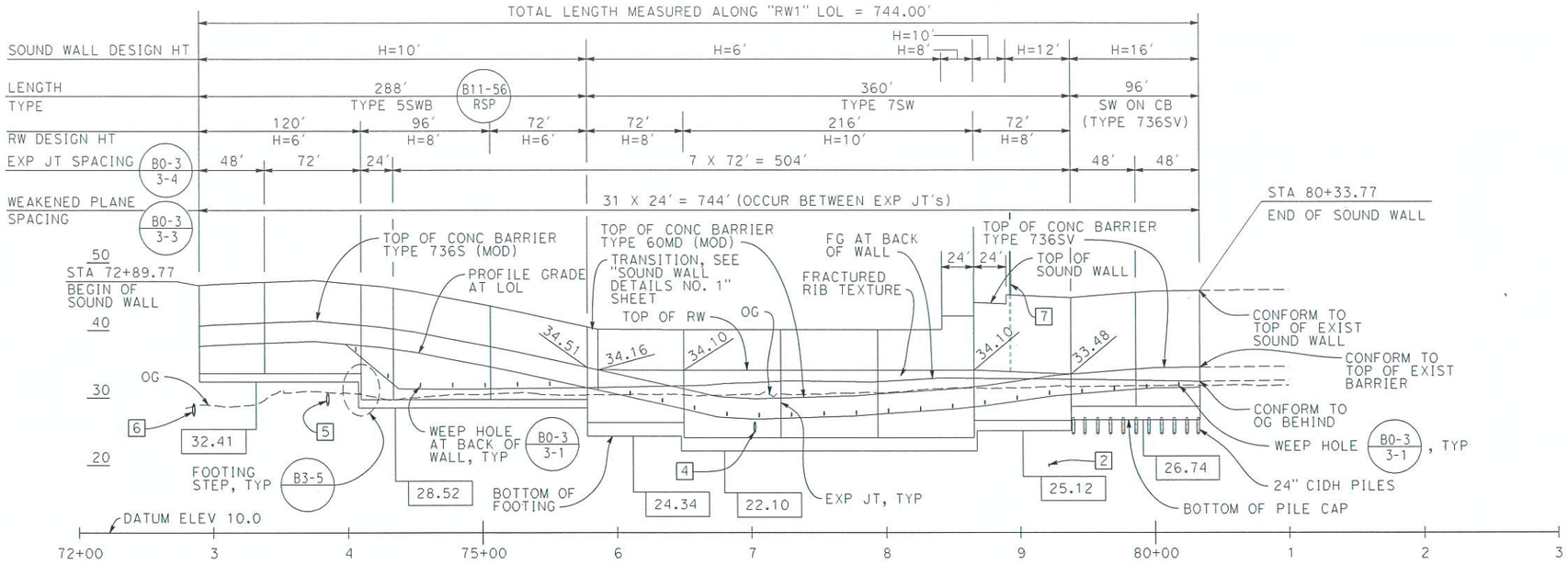

DEVELOPED ELEVATION

SCALE: 1"=50' HOR
1"=10' VERT

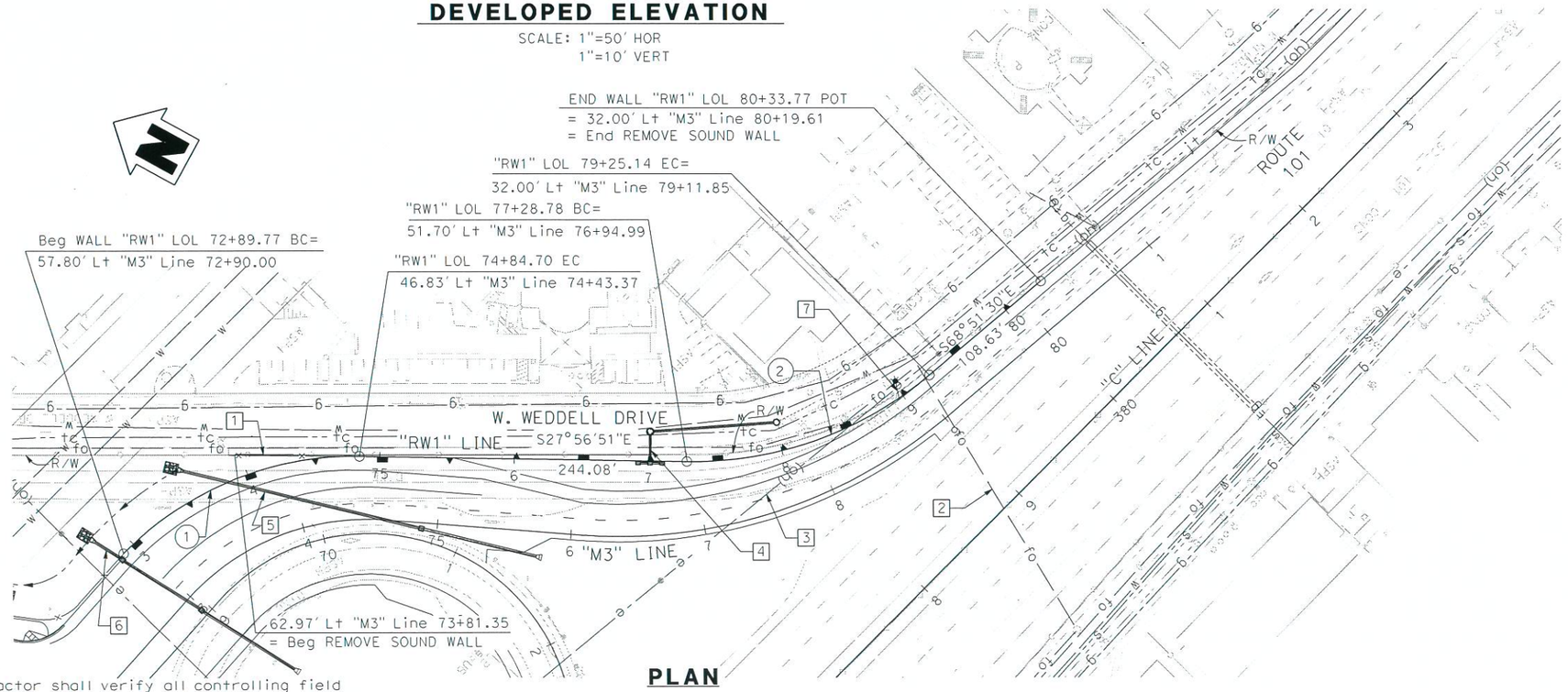

PLAN

SCALE: 1"=50'
THIS PLAN ACCURATE FOR RETAINING WALL & SOUND WALL ONLY

CURVE DATA

(1) R = 240.00
Δ = 46°32'13"
T = 103.20'
L = 194.93'

(2) R = 275.00'
Δ = 40°54'39"
T = 102.57'
L = 196.36'

NOTES:

1. CHAIN LINK FENCE (TYPE CL-6). (SEE ROADWAY PLANS)
2. EXIST VERIZON FO LINE TO BE PROTECTED IN PLACE.
3. EXIST PG&E OVERHEAD 12KV TO BE PROTECTED IN PLACE.
4. PROPOSED 15" RCP. (SEE ROADWAY PLANS)
5. PROPOSED 18" RCP. (SEE ROADWAY PLANS)
6. PROPOSED 18" RCP. (SEE ROADWAY PLANS)
7. ELECTROLIER PEDESTAL AT STA 78+92.96, SEE CONSTRUCTION DETAIL SHEET C-56.

NOTE:

The Contractor shall verify all controlling field dimensions before ordering or fabricating any material

DIST	COUNTY	ROUTE	POST MILES TOTAL PROJECT	SHEET No	TOTAL SHEETS
04	SCL	101, 237	45.2/45.8 2.7/3.3	685	736

REGISTERED CIVIL ENGINEER — DATE 5/11/18

6-20-18
PLANS APPROVAL DATE

REGISTERED PROFESSIONAL ENGINEER
GUOPING XU
No. 63977
Exp. 9/30/2018
CIVIL
STATE OF CALIFORNIA

The State of California or its officers or agents shall not be responsible for the accuracy or completeness of scanned copies of this plan sheet.

WMH CORPORATION
1221 Broadway, Suite 800
Oakland, CA 94612

VTA
3331 N First St
Building B
San Jose, Ca 95134

DESIGN OVERSIGHT — SIGN OFF DATE 5-11-2018

	BY	CHECKED	LOAD & RESISTANCE FACTOR DESIGN	LIVE LOADING: 250 PSF	
DESIGN	G. XU	S. FU			
DETAILS	C. HUA	S. DWYER	LAYOUT	S. LOUPE	S. HAAS
QUANTITIES	G. XU	S. FU	SPECIFICATIONS	S. HAAS	PLANS AND SPECS COMPARED

PREPARED FOR THE
STATE OF CALIFORNIA
DEPARTMENT OF TRANSPORTATION

STEVE LOUPE
PROJECT ENGINEER

BRIDGE NO.	RETAINING WALL & SOUND WALL REPLACEMENT
37E0072	GENERAL PLAN
POST MILES: X	

DESIGN GENERAL PLAN SHEET (ENGLISH) (REV. 03/14/12)

ORIGINAL SCALE IN INCHES FOR REDUCED PLANS: 0 1 2 3

UNIT: 0000
PROJECT NUMBER & PHASE: 0413000204
CONTRACT NO.: 04-4H2901

DISREGARD PRINTS BEARING EARLIER REVISION DATES →

REVISION DATES				SHEET	OF
2/23/18				1	14

FILE => 37E0072-a-gp.dgn

DATE PLOTTED => 5/3/2018 TIME PLOTTED => 12:18:38 AM
USERNAME => chua

DIST	COUNTY	ROUTE	POST MILES TOTAL PROJECT	SHEET No	TOTAL SHEETS
04	SCL	101, 237	45.2/45.8 2.7/3.3	686	736

5/11/18
REGISTERED CIVIL ENGINEER — DATE

REGISTERED PROFESSIONAL ENGINEER
GUOPING XU
No. 63977
EXP. 9/30/2018
CIVIL
STATE OF CALIFORNIA

6-20-18
PLANS APPROVAL DATE

The State of California or its officers or agents shall not be responsible for the accuracy or completeness of scanned copies of this plan sheet.

WMH CORPORATION
1221 Broadway, Suite 800
Oakland, CA 94612

VTA
3331 N First St
Building B
San Jose, Ca 95134

DESIGN NOTES FOR SOUND WALL

DESIGN: Uniform Building code, 1997 Edition; and AASHTO LRFD Bridge Design Specifications, 6th Edition and Caltrans Amendments, preface dated January 2014

DESIGN WIND LOAD: 33 psf

SEISMIC LOADING: 0.57 Dead load

REINFORCED CONCRETE: f'c = 3.6 ksi
fy = 60 ksi

CONCRETE MASONRY:

REGULAR STRENGTH	HIGH STRENGTH	
f'm = 1500 psi	f'm = 2000 psi	
fb = 495 psi	fb = 660 psi	fb = 830 psi
fs = 24,000 psi	fs = 24,000 psi	fs = 24,000 psi
n = 25.8	n = 19.3	n = 15.5

LOAD COMBINATION AND LIMIT STATES:

Service I	Q = 1.00DC + 1.00EV + 1.00EH + 1.00LS + 0.30WS
Service II	Q = 1.00DC + 1.00EV + 1.00EH + 1.00WS
Strength I	Q = αDC + βEV + 1.50EH + 1.75LS
Strength III	Q = αDC + βEV + 1.50EH + 1.40WS
Strength V	Q = αDC + βEV + 1.50EH + 1.35LS + 0.40WS
Extreme I	Q = 1.00DC + 1.00EV + 1.00EH + 1.00EQD + 1.00EQE
Extreme II	Q = 1.00DC + 1.00EV + 1.00EH + 1.00CT

Where:

Q: Force Effects
α : 1.25 or 0.90 which ever Controls Design
β : 1.35 or 1.00 which ever Controls Design
DC: Dead Load of Structure Components
EV: Vertical Earth Fill Pressure
LS: Live Load Surcharge
EQD: Seismic Earth Pressure
EQE: Soil and Structure Components Inertia. Soil inertia ignored for stem design
WS: Wind Load on Sound Wall and Barrier
CT: Vehicular Collision Force

STANDARD PLANS DATED 2015

A3A Abbreviations (Sheet 1 of 3)
A3B Abbreviations (Sheet 2 of 3)
A3C Abbreviations (Sheet 3 of 3)
A10A Legend - Lines and Symbols (Sheet 1 of 5)
A10B Legend - Lines and Symbols (Sheet 2 of 5)
A10C Legend - Lines and Symbols (Sheet 3 of 5)
A10D Legend - Lines and Symbols (Sheet 4 of 5)
A10E Legend - Lines and Symbols (Sheet 5 of 5)
RSP A76A CONCRETE BARRIER TYPE 60M
B0-3 Bridge Details
B3-4A RETAINING WALL TYPE 1 (CASE 1)
B3-5 RETAINING WALL DETAILS NO. 1
B3-6 RETAINING WALL DETAILS NO. 2
RSP B11-56 CONCRETE BARRIER TYPE 736
B15-6 SOUND WALL MASONRY BLOCK ON TYPE 736S/SV BARRIER DETAILS (1)
B15-9 SOUND WALL MASONRY BLOCK MISCELLANEOUS DETAILS
B15-15 SOUND WALL MASONRY BLOCK ON TYPE 736S/SV BARRIER ON PILE FOOTING FOR SPANNING UTILITIES

Standard Plan Sheet No.
Detail No.

INDEX TO PLANS

No.	Title
1	General Plan
2	Index to Plans
3	Typical Sections
4	Wall Profile
5	Wall Details No. 1
6	Wall Details No. 2
7	Wall Details No. 3
8	Retaining Wall Type 5SWB Details No. 1
9	Retaining Wall Type 5SWB Details No. 2
10	Retaining Wall Type 7SW Details No. 1
11	Retaining Wall Type 7SW Details No. 2
12	Aesthetic Treatment Details
13	Log of Test Borings 1 of 2
14	Log of Test Borings 2 of 2

SHALOW FOUNDATION DATA TABLE

DISTRICT ERS ID	SEGMENT (ft) BEGIN STATION	SEGMENT (ft) END STATION	DESIGN HEIGHT (ft)	SERVICE LIMIT STATE PERMISSIBLE NET CONTACT STRESS (ksf)	STRENGTH GROSS NOMINAL BEARING RESISTANCE FOR CONTROLLING LOAD CASE ϕ_b = 0.55 (ksf)	EXTREME EVENT GROSS NOMINAL BEARING RESISTANCE ϕ_b = 1.00 (ksf)
37E0072	72+89.77	74+09.77	6.0	1.2	4.0	5.0
37E0072	74+09.77	75+05.77	8.0	1.5	5.0	5.0
37E0072	75+05.77	75+77.77	6.0	1.2	4.0	4.0
37E0072	75+77.77	76+49.77	8.0	0.6	3.0	4.0
37E0072	76+49.77	78+65.77	10.0	0.6	3.0	4.0
37E0072	78+65.77	79+37.77	8.0	0.6	3.0	4.0

SOIL PARAMETERS (FOR SECTION OF WALL IN CUT)

APPROX ELEVATION (ft)	SOIL PROFILE	SOIL STRENGTH	EFFECTIVE UNIT WT (psf)
31 - 24	Lean Clay	C = 1,150 psf	125
24 - 18	Lean Clay	C = 1,150 psf	60
18 - 9	Silty Sand	ø = 25°	60
9 - 5.5	Lean Clay	C = 450 psf	60

PILE DATA TABLE

DISTRICT ERS ID	SEGMENT (ft) BEGIN STATION	SEGMENT (ft) END STATION	PILE TYPE	NOMINAL RESISTANCE (kips) COMPRESSION	NOMINAL RESISTANCE (kips) TENSION	DESIGN TIP ELEV [1] (ft)	SPECIFIED TIP ELEV [2] (ft)
37E0072	79+37.77	80+33.77	24" CIDH	60	N/A	0.0 (a) 2.0 (b)	0.0

1. DESIGN TIP ELEVATIONS ARE CONROLLED BY: (a) COMPRESSION, AND (b) LATERAL LOAD.
2. THE CIDH SPECIFIED TIP ELEVATION SHALL NOT BE RAISED.

NOTE:
The Contractor shall verify all controlling field dimensions before ordering a fabricating any material

DESIGN OVERSIGHT
5-11-2018
SIGN OFF DATE

	BY	CHECKED
DESIGN	G. XU	S. FU
DETAILS	C. HUA	S. DWYER
QUANTITIES	G. XU	S. FU

PREPARED FOR THE STATE OF CALIFORNIA DEPARTMENT OF TRANSPORTATION

STEVE LOUPE
PROJECT ENGINEER

BRIDGE NO. 37E0072
POST MILES X

RETAINING WALL & SOUND WALL REPLACEMENT
INDEX TO PLANS

DESIGN DETAIL SHEET (ENGLISH) (REV. 03/14/12)
ORIGINAL SCALE IN INCHES FOR REDUCED PLANS 0 1 2 3
UNIT: 0000
PROJECT NUMBER & PHASE: 0413000204
CONTRACT NO.: 04-4H2901
DISREGARD PRINTS BEARING EARLIER REVISION DATES →
REVISION DATES: 2/23/18
SHEET 2 OF 14
FILE => 37E0072-a-itp.dgn
TIME PLOTTED => 12:18:39 AM
DATE PLOTTED => 5/3/2018
USERNAME => chua

DIST	COUNTY	ROUTE	POST MILES TOTAL PROJECT	SHEET No	TOTAL SHEETS
04	SCL	101, 237	45.2/45.8 2.7/3.3	687	736

REGISTERED CIVIL ENGINEER — DATE 5/11/18

REGISTERED PROFESSIONAL ENGINEER — GUOPING XU — No. 63977 — Exp. 9/30/2018 — CIVIL — STATE OF CALIFORNIA

6-20-18
PLANS APPROVAL DATE

The State of California or its officers or agents shall not be responsible for the accuracy or completeness of scanned copies of this plan sheet.

WMH CORPORATION
1221 Broadway, Suite 800
Oakland, CA 94612

VTA
3331 N First St
Building B
San Jose, Ca 95134

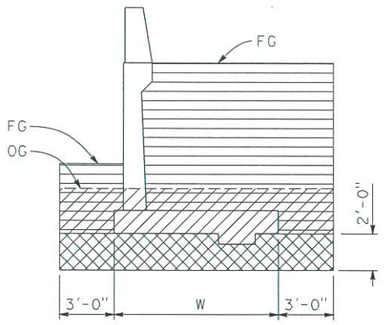

FOR WALL TYPE 5SWB

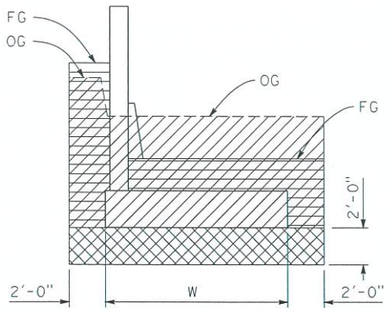

FOR WALL TYPE 7SW

LEGENDS:

- INDICATES NEW STRUCTURE
- INDICATES EXIST STRUCTURE
- INDICATES REMOVAL OF EXIST SOUND WALL (PORTION)
- STRUCTURE EXCAVATION
- LEAN CONCRETE BACKFILL
- STRUCTURE BACKFILL

LIMITS OF PAYMENT FOR ESCAVATION AND BACKFILL

NOT TO SCALE

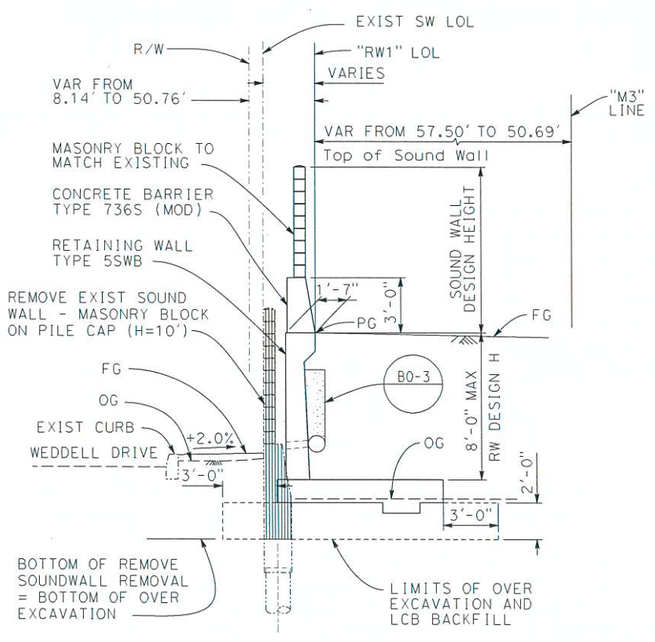

STA RW1 72+89.77 TO RW1 75+77.77
SOUND WALL ON RETAINING WALL TYPE 5SWB
1/4"=1'-0"

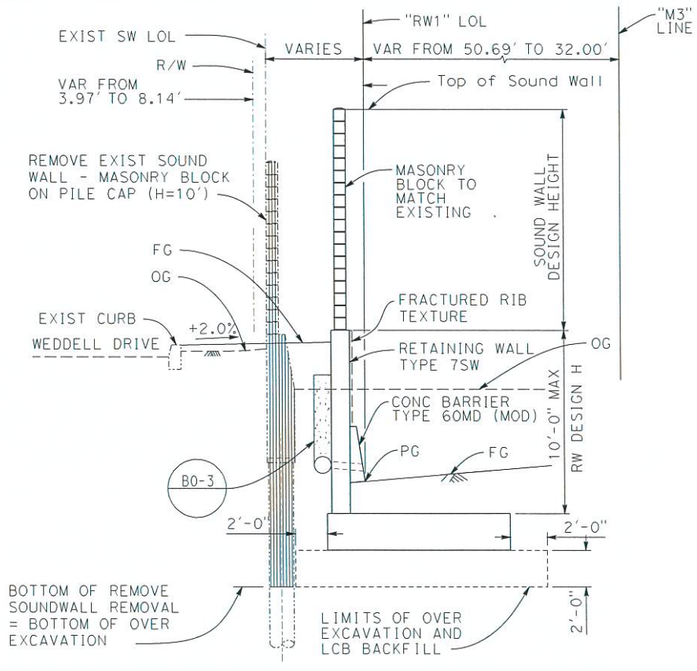

STA RW1 75+77.77 TO RW1 79+37.77
SOUND WALL ON RETAINING WALL TYPE 7SW
1/4"=1'-0"

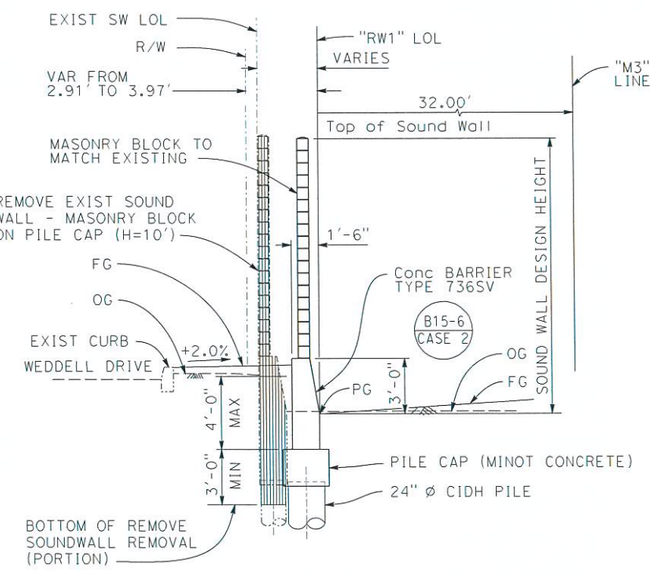

STA RW1 79+37.77 TO RW1 80+33.77
SOUND WALL ON CB TYPE 736SV (CASE 2)
1/4"=1'-0"

NOTE:

The Contractor shall verify all controlling field dimensions before ordering a fabricating any material

DESIGN OVERSIGHT — SIGN OFF DATE 5-11-2018

	BY	CHECKED
DESIGN	G. XU	S. FU
DETAILS	C. HUA	S. DWYER
QUANTITIES	G. XU	S. FU

PREPARED FOR THE
STATE OF CALIFORNIA
DEPARTMENT OF TRANSPORTATION

STEVE LOUPE
PROJECT ENGINEER

BRIDGE NO. 37E0072
POST MILES X

RETAINING WALL & SOUND WALL REPLACEMENT
TYPICAL SECTIONS

DESIGN DETAIL SHEET (ENGLISH) (REV. 03/14/12)

ORIGINAL SCALE IN INCHES FOR REDUCED PLANS 0 1 2 3

UNIT: 0000
PROJECT NUMBER & PHASE: 0413000204 CONTRACT NO.: 04-4H2901

DISREGARD PRINTS BEARING EARLIER REVISION DATES →

REVISION DATES				SHEET	OF
2/23/18				3	14

FILE => 37E0072-d-ts.dgn

DATE PLOTTED => 5/3/2018 TIME PLOTTED => 12:18:40 AM USERNAME => chua

DIST	COUNTY	ROUTE	POST MILES TOTAL PROJECT	SHEET No	TOTAL SHEETS
04	SCL	101, 237	45.2/45.8 2.7/3.3	688	736

REGISTERED CIVIL ENGINEER — DATE 5/11/18

REGISTERED PROFESSIONAL ENGINEER — GUOPING XU — No. 63977 — Exp. 9/30/2018 — CIVIL — STATE OF CALIFORNIA

6-20-18
PLANS APPROVAL DATE

The State of California or its officers or agents shall not be responsible for the accuracy or completeness of scanned copies of this plan sheet.

WMH CORPORATION
1221 Broadway, Suite 800
Oakland, CA 94612

VTA
3331 N First St
Building B
San Jose, Ca 95134

WALL PROFILE - TYPE 5SWB

"RW1" STA	PROFILE GRADE	FG BEHIND	TOP OF SOUND WALL	TOP OF RW	OG AT LOL
72+89.77	37.09	37.09	46.09	37.09	29.00
72+90	37.09	37.09	46.09	37.09	29.00
73+00	37.21	37.21	46.21	37.21	29.00
73+10	37.32	37.32	46.32	37.32	28.70
73+20	37.41	37.41	46.41	37.41	28.70
73+30	37.50	37.50	46.50	37.50	29.00
73+40	37.58	37.58	46.58	37.58	30.00
73+50	37.66	37.66	46.66	37.66	31.10
73+60	37.74	37.74	46.74	37.74	30.80
73+70	37.80	37.80	46.80	37.80	31.00
73+80	37.87	37.87	46.87	37.87	30.90
73+90	37.93	37.93	46.93	37.93	30.70
74+00	37.95	37.66	46.95	37.95	30.70
74+10	37.77	36.00	46.77	37.77	30.50
74+20	37.58	34.34	46.58	37.58	30.20
74+30	37.41	32.68	46.41	37.41	29.70
74+40	37.17	31.17	46.17	37.17	29.90
74+50	36.76	31.14	45.76	36.76	30.10
74+60	36.37	31.12	45.37	36.37	30.20
74+70	35.97	31.11	44.97	35.97	30.30
74+80	35.59	31.11	44.59	35.59	30.50
74+90	35.22	31.12	44.22	35.22	30.50
75+00	34.85	31.15	43.85	34.85	30.50
75+10	34.44	31.21	43.44	34.44	30.60
75+20	34.03	31.26	43.03	34.03	30.70
75+30	33.60	31.31	42.60	33.60	30.80
75+40	33.16	31.37	42.16	33.16	30.70
75+50	32.72	31.41	41.72	32.72	30.50
75+60	32.28	31.45	41.28	32.28	30.40
75+70	31.85	31.49	40.85	31.85	30.40
75+77.77	31.51	31.51	40.51	31.51	30.40

WALL PROFILE - TYPE 7SW

"RW1" STA	PROFILE GRADE	FG BEHIND	TOP OF SOUND WALL	TOP OF RW	OG AT LOL
75+77.77	31.51	31.51	40.51	34.51	30.40
75+80	31.41	31.52	40.50	34.50	30.50
75+90	30.97	31.56	40.44	34.44	30.40
76+00	30.53	31.60	40.38	34.38	30.40
76+10	30.09	31.64	40.33	34.33	30.50
76+20	29.65	31.68	40.27	34.27	30.50
76+30	29.21	31.72	40.21	34.21	30.50
76+40	28.77	31.76	40.16	34.16	30.60
76+50	28.33	31.80	40.10	34.10	30.40
76+60	27.86	31.84	40.10	34.10	30.30
76+70	27.39	31.97	40.10	34.10	30.40
76+80	27.10	32.14	40.10	34.10	30.40
76+90	26.99	32.20	40.10	34.10	30.50
77+00	26.88	32.26	40.10	34.10	30.50
77+10	26.89	32.37	40.10	34.10	30.80
77+20	26.95	32.47	40.10	34.10	30.60
77+30	27.01	32.51	40.10	34.10	30.40
77+40	27.07	32.49	40.10	34.10	30.50
77+50	27.12	32.46	40.10	34.10	30.50
77+60	27.18	32.43	40.10	34.10	30.70
77+70	27.22	32.40	40.10	34.10	30.70
77+80	27.34	32.38	40.10	34.10	30.80
77+90	27.50	32.37	40.10	34.10	30.80
78+00	27.65	32.48	40.10	34.10	30.80
78+10	27.79	32.60	40.10	34.10	30.90
78+20	27.93	32.71	40.10	34.10	31.10
78+30	28.06	32.82	40.10	34.10	31.20
78+40	28.17	32.94	40.10	34.10	31.30
78+50	28.29	32.92	42.10	34.10	31.50
78+60	28.50	32.90	42.10	34.10	31.40
78+70	28.71	32.88	44.06	34.06	31.40
78+80	28.96	32.86	43.98	33.98	31.40
78+90	29.25	32.84	45.22	33.89	31.50
79+00	29.54	32.82	45.14	33.81	31.50
79+10	29.84	32.80	45.05	33.72	31.50
79+20	30.13	32.78	44.96	33.63	31.60
79+30	30.36	32.76	44.88	33.55	31.80
79+37.77	30.48	32.74	44.81	33.48	31.70

WALL PROFILE - TYPE 736SV

"RW1" STA	PROFILE GRADE	FG BEHIND	TOP OF SOUND WALL	TOP BARRIER	OG AT LOL
79+37.77	30.48	32.74	44.81	33.48	31.70
79+40	30.52	32.74	44.85	33.52	31.70
79+50	30.68	32.72	45.01	33.68	31.70
79+60	30.84	32.68	45.17	33.84	31.70
79+70	31.00	32.65	45.33	34.00	31.70
79+80	31.16	32.62	45.49	34.16	31.80
79+90	31.31	32.59	45.64	34.31	31.80
80+00	31.47	32.55	45.80	34.47	31.80
80+10	31.49	32.52	45.82	34.49	31.80
80+20	31.50	32.49	45.83	34.50	31.90
80+30	31.52	32.46	45.85	34.52	31.80
80+33.77	31.52	32.44	45.85	34.52	31.80

NOTE:

The Contractor shall verify all controlling field dimensions before ordering a fabricating any material

DESIGN OVERSIGHT — SIGN OFF DATE 5-11-2018

	BY	CHECKED
DESIGN	G. XU	S. FU
DETAILS	C. HUA	S. DWYER
QUANTITIES	G. XU	S. FU

PREPARED FOR THE STATE OF CALIFORNIA DEPARTMENT OF TRANSPORTATION

STEVE LOUPE — PROJECT ENGINEER

BRIDGE NO. 37E0072 — POST MILES X

RETAINING WALL & SOUND WALL REPLACEMENT
WALL PROFILE

DESIGN DETAIL SHEET (ENGLISH) (REV. 03/14/12)

ORIGINAL SCALE IN INCHES FOR REDUCED PLANS 0 1 2 3

UNIT: 0000
PROJECT NUMBER & PHASE: 0413000204 CONTRACT NO.: 04-4H2901

DISREGARD PRINTS BEARING EARLIER REVISION DATES →

REVISION DATES: 2/23/18

SHEET 4 OF 14

FILE => 37E0072-e-wp.dgn

DATE PLOTTED => 5/3/2018 TIME PLOTTED => 12:18:41 AM USERNAME => chua

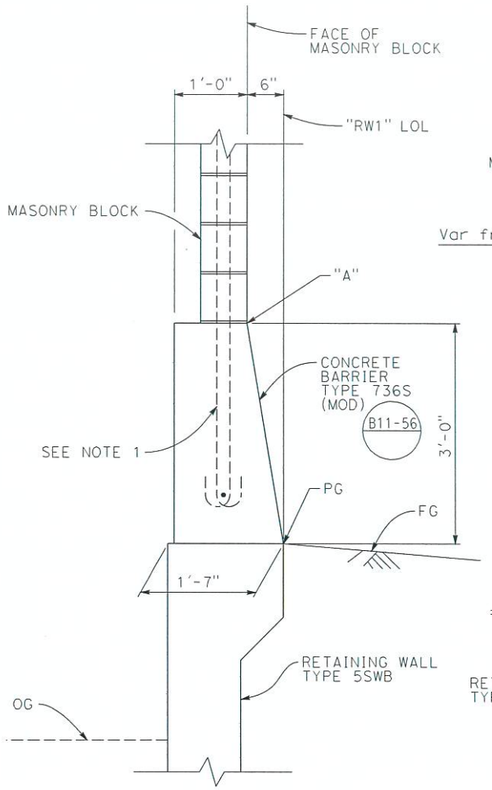

SECTION A-A

1" = 1'-0"

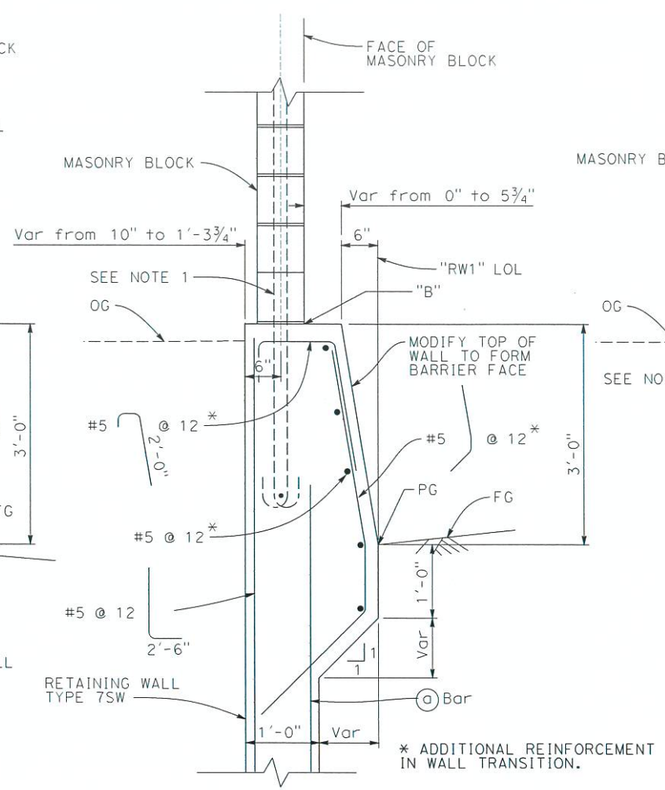

SECTION B-B

1" = 1'-0"

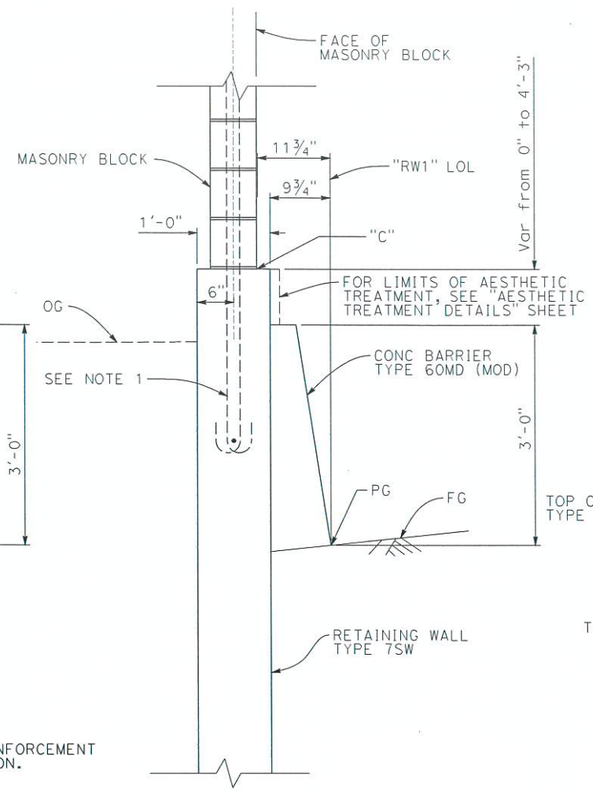

SECTION C-C

1" = 1'-0"

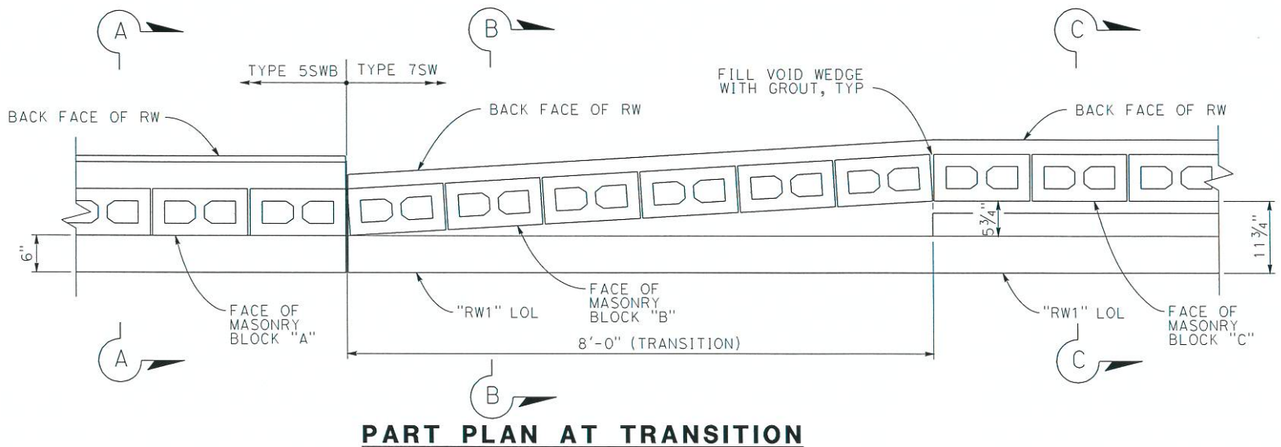

PART PLAN AT TRANSITION BETWEEN TYPE 5SWB & 7SW

1" = 1'-0"

NOTE:

The Contractor shall verify all controlling field dimensions before ordering a fabricating any material

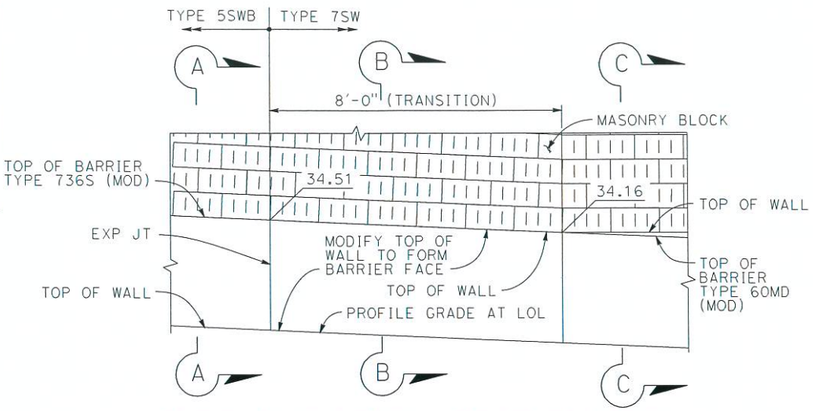

PART ELEVATION AT TRANSITION BETWEEN TYPE 5SWB & TYPE 7SW

1/2" = 1'-0"

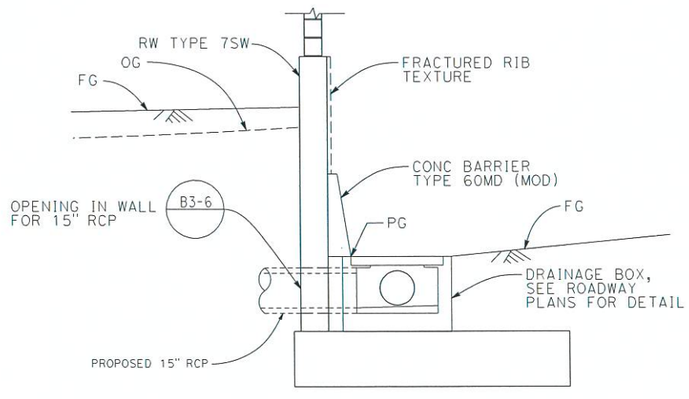

SECTION AT "RW1" STA 77+02.50

3/8" = 1'-0"

NOTE: 1. FOR SOUND WALL REINFORCEMENT DETAILS, SEE "SOUND WALL REINFORCEMENT TABLE" ON STANDARD PLAN B15-6.

DIST	COUNTY	ROUTE	POST MILES TOTAL PROJECT	SHEET No	TOTAL SHEETS
04	SCL	101, 237	45.2/45.8 2.7/3.3	689	736

5/11/18
REGISTERED CIVIL ENGINEER — DATE

REGISTERED PROFESSIONAL ENGINEER — GUOPING XU — No. 63977 — Exp. 9/30/2018 — CIVIL — STATE OF CALIFORNIA

6-20-18
PLANS APPROVAL DATE

The State of California or its officers or agents shall not be responsible for the accuracy or completeness of scanned copies of this plan sheet.

WMH CORPORATION
1221 Broadway, Suite 800
Oakland, CA 94612

VTA
3331 N First St
Building B
San Jose, Ca 95134

DESIGN OVERSIGHT
5-11-2018
SIGN OFF DATE

DESIGN DETAIL SHEET (ENGLISH) (REV. 03/14/12)

	BY	CHECKED
DESIGN	G. XU	S. FU
DETAILS	C. HUA	S. DWYER
QUANTITIES	G. XU	S. FU

ORIGINAL SCALE IN INCHES FOR REDUCED PLANS 0 1 2 3

PREPARED FOR THE STATE OF CALIFORNIA DEPARTMENT OF TRANSPORTATION

STEVE LOUPE
PROJECT ENGINEER

BRIDGE NO. 37E0072
POST MILES X

RETAINING WALL & SOUND WALL REPLACEMENT
WALL DETAILS NO. 1

UNIT: 0000
PROJECT NUMBER & PHASE: 0413000204 CONTRACT NO.: 04-4H2901

DISREGARD PRINTS BEARING EARLIER REVISION DATES →

REVISION DATES	SHEET	OF
2/23/18	5	14

FILE => 37E0072-g-wdt101.dgn

DATE PLOTTED => 5/3/2018 TIME PLOTTED => 12:18:42 AM USERNAME => Chua

DIST	COUNTY	ROUTE	POST MILES TOTAL PROJECT	SHEET No	TOTAL SHEETS
04	SCL	101, 237	45.2/45.8 2.7/3.3	690	736

REGISTERED CIVIL ENGINEER — DATE 5/11/18

REGISTERED PROFESSIONAL ENGINEER — GUOPING XU — No. 63977 — Exp. 9/30/2018 — CIVIL — STATE OF CALIFORNIA

6-20-18
PLANS APPROVAL DATE

The State of California or its officers or agents shall not be responsible for the accuracy or completeness of scanned copies of this plan sheet.

WMH CORPORATION
1221 Broadway, Suite 800
Oakland, CA 94612

VTA
3331 N First St
Building B
San Jose, Ca 95134

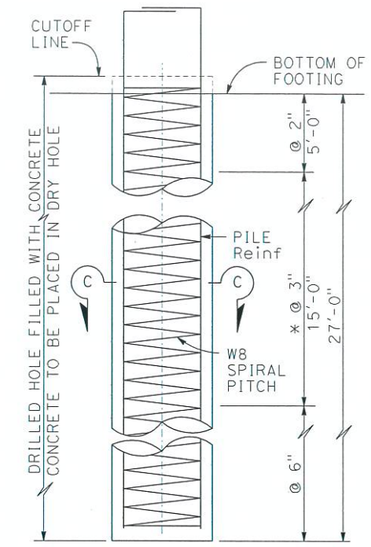

* @ 2" at option of Contractor.

ELEVATION
NOT TO SCALE

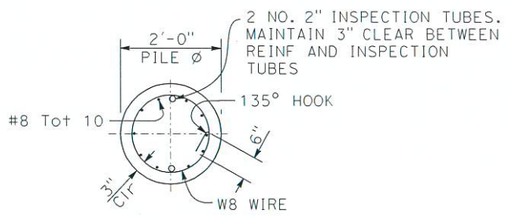

SECTION C-C

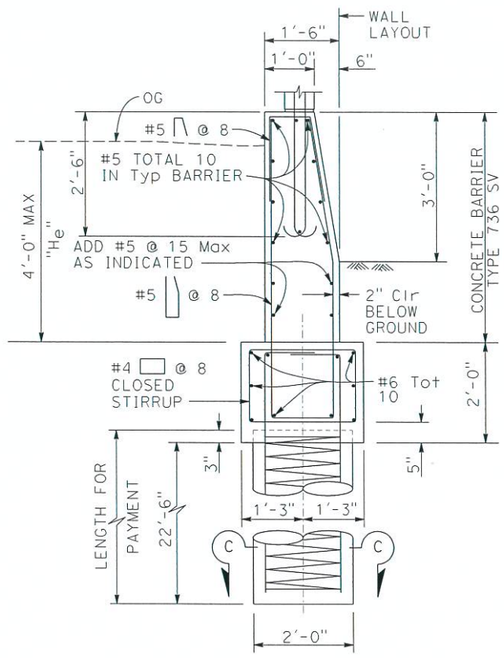

BARRIER SECTION
NOT TO SCALE

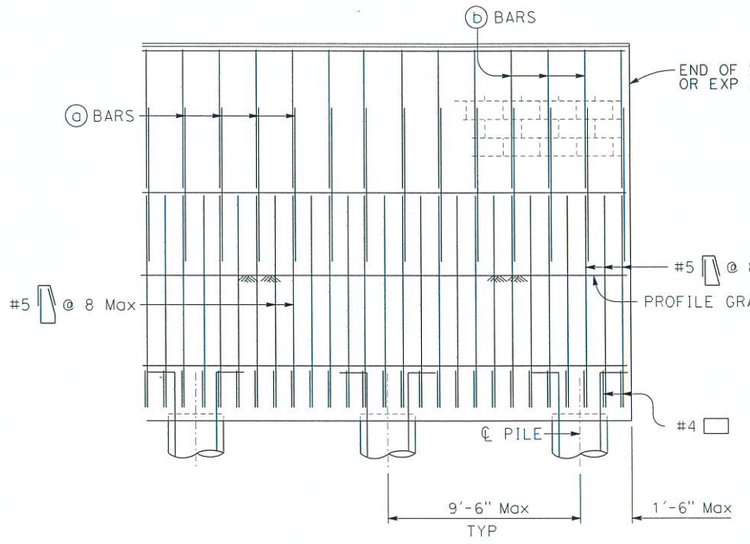

NOTE:
FOR ⓐ BARS, ⓑ BARS AND OTHER SOUND WALL DETAILS NOT SHOWN, SEE "SOUND WALL REINFORCEMENT TABLE" ON STANDARD PLAN B15-6.

PART ELEVATIONS
NOT TO SCALE

NOTE:
The Contractor shall verify all controlling field dimensions before ordering a fabricating any material

DESIGN OVERSIGHT 5-11-2018 SIGN OFF DATE

	BY	CHECKED
DESIGN	G. XU	S. FU
DETAILS	C. HUA	S. DWYER
QUANTITIES	G. XU	S. FU

PREPARED FOR THE STATE OF CALIFORNIA DEPARTMENT OF TRANSPORTATION

STEVE LOUPE
PROJECT ENGINEER

BRIDGE NO. 37E0072
POST MILES X

RETAINING WALL & SOUND WALL REPLACEMENT
WALL DETAILS NO. 2

DESIGN DETAIL SHEET (ENGLISH) (REV. 03/14/12)

ORIGINAL SCALE IN INCHES FOR REDUCED PLANS 0 1 2 3

UNIT: 0000
PROJECT NUMBER & PHASE: 0413000204 CONTRACT NO.: 04-4H2901

DISREGARD PRINTS BEARING EARLIER REVISION DATES →

REVISION DATES				SHEET	OF
2/23/18				6	14

FILE => 37E0072-g-wdt102.dgn

USERNAME => cnua DATE PLOTTED => 5/3/2018 TIME PLOTTED => 12:18:42 AM

NOTES:

1. FOR SOUND WALL LAYOUT, SEE GENERAL PLAN.
2. FOR DETAILS NOT SHOWN AND GENERAL NOTES SEE INDEX TO PLANS.
3. MATCH EXISTING SOUND WALL COLOR AND TEXTURE.

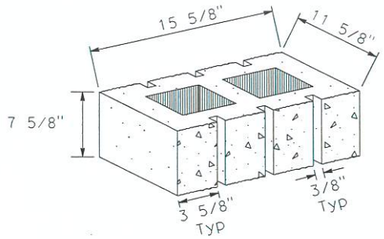

'A' BLOCK
PLAIN FACE - BOTH SIDES
3 SCORE
12 X 8 X 16 NOMINAL

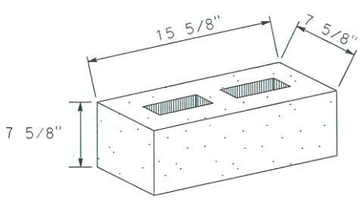

'B' BLOCK
PLAIN FACE - BOTH SIDES
8 X 8 X 16 NOMINAL

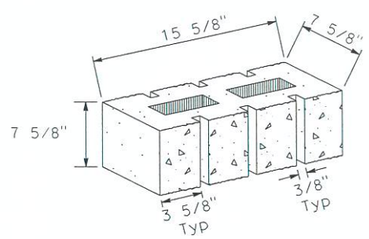

'C' BLOCK
SPLIT FACE - BOTH SIDES
3 SCORE
8 X 8 X 16 NOMINAL

BLOCK DETAILS

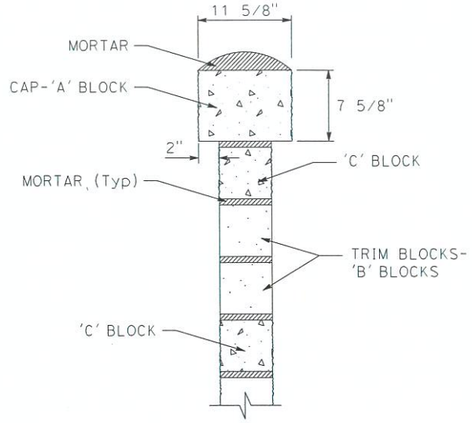

SECTION-ELEVATION DETAIL

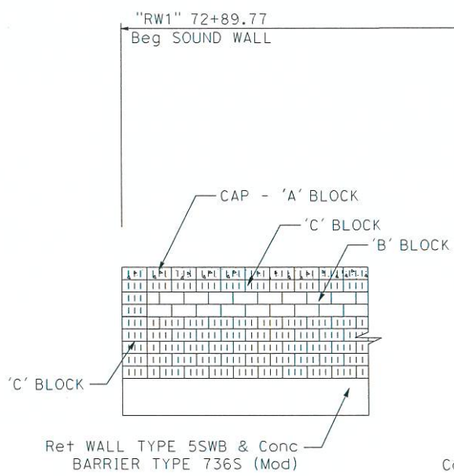

TYPICAL END DETAIL

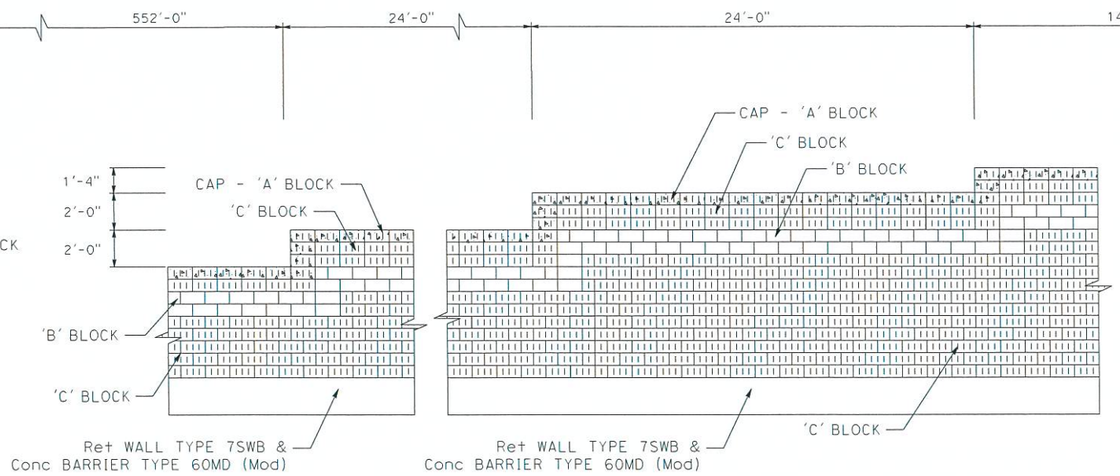

TYPICAL STEP DETAIL

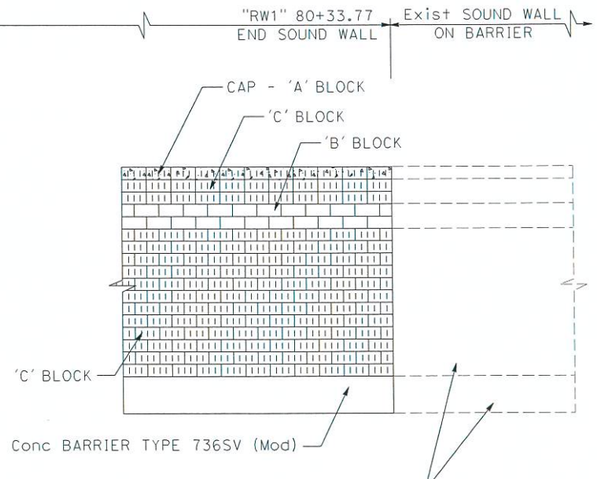

SOUND WALL NO 1 CONFORM DETAIL

NOTE:

The Contractor shall verify all controlling field dimensions before ordering a fabricating any material

THIS PLAN ACCURATE FOR SOUND WALL AESTHETICS ONLY

DIST	COUNTY	ROUTE	POST MILES TOTAL PROJECT	SHEET No.	TOTAL SHEETS
04	SCL	101, 237	45.2/45.8 2.7/3.3	691	736

REGISTERED CIVIL ENGINEER — DATE 5/11/18

6-20-18
PLANS APPROVAL DATE

REGISTERED PROFESSIONAL ENGINEER — GUOPING XU — No. 63977 — EXP. 9/30/2018 — CIVIL — STATE OF CALIFORNIA

The State of California or its officers or agents shall not be responsible for the accuracy or completeness of scanned copies of this plan sheet.

WMH CORPORATION
1221 Broadway, Suite 800
Oakland, CA 94612

VTA
3331 N First St
Building B
San Jose, Ca 95134

DESIGN OVERSIGHT — SIGN OFF DATE 5-11-2018

	BY	CHECKED
DESIGN	G. XU	S. FU
DETAILS	C. HUA	S. DWYER
QUANTITIES	G. XU	S. FU

PREPARED FOR THE STATE OF CALIFORNIA
DEPARTMENT OF TRANSPORTATION

STEVE LOUPE
PROJECT ENGINEER

BRIDGE NO. 37E0072
POST MILES X

RETAINING WALL & SOUND WALL REPLACEMENT
WALL DETAILS NO. 3

DESIGN DETAIL SHEET (ENGLISH) (REV. 03/14/12)

ORIGINAL SCALE IN INCHES FOR REDUCED PLANS 0 1 2 3

UNIT: 0000
PROJECT NUMBER & PHASE: 0413000204 CONTRACT NO.: 04-4H2901

DISREGARD PRINTS BEARING EARLIER REVISION DATES

REVISION DATES				SHEET	OF
2/23/18				7	14

FILE => 37E0072-g-wdt103.dgn

TIME PLOTTED => 12:18:43 AM
DATE PLOTTED => 5/3/2018
USERNAME => chua

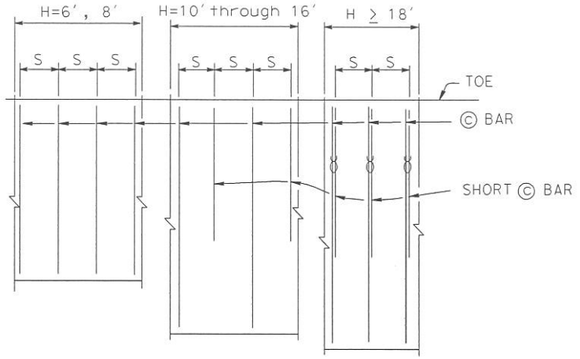

PLAN
NO SCALE

NOTES:
Only © bars shown
"S" is © bar spacing, see table
℄ : 2 bar bundle

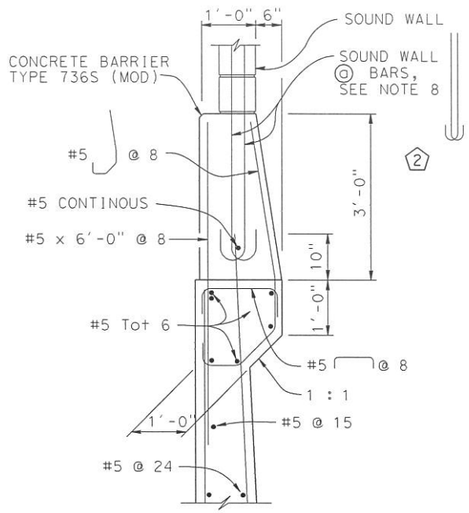

DETAIL A
¾" = 1'-0"

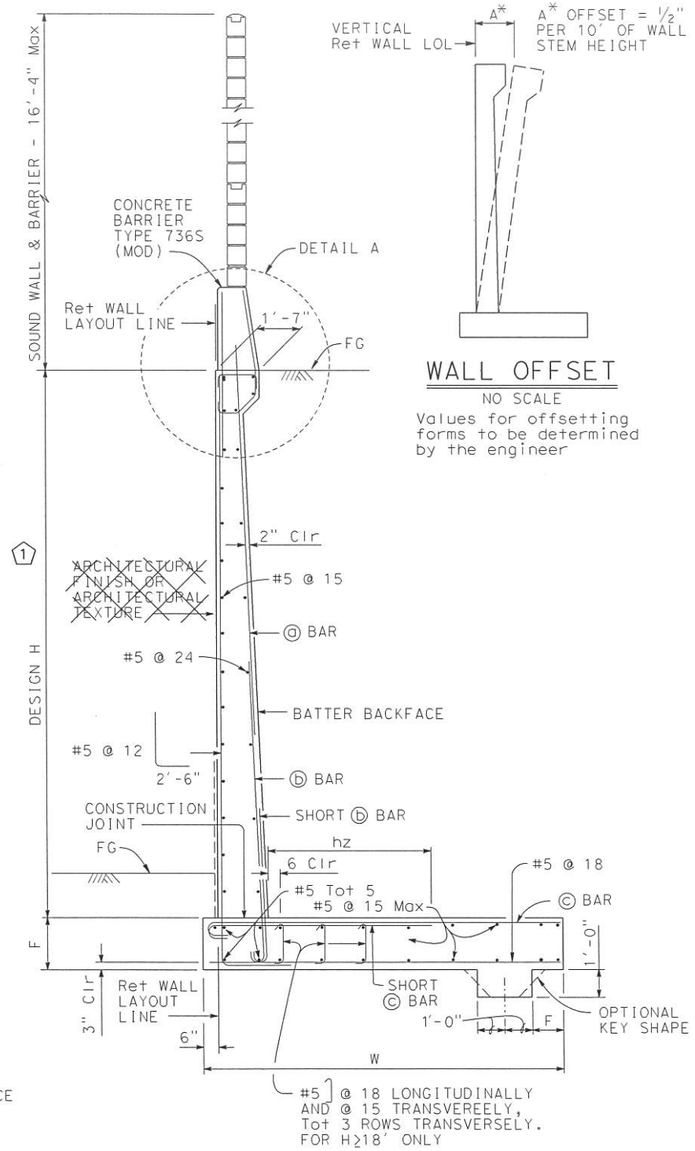

SPREAD FOOTING SECTION
⅜" = 1'-0"

WALL OFFSET
NO SCALE
Values for offsetting forms to be determined by the engineer

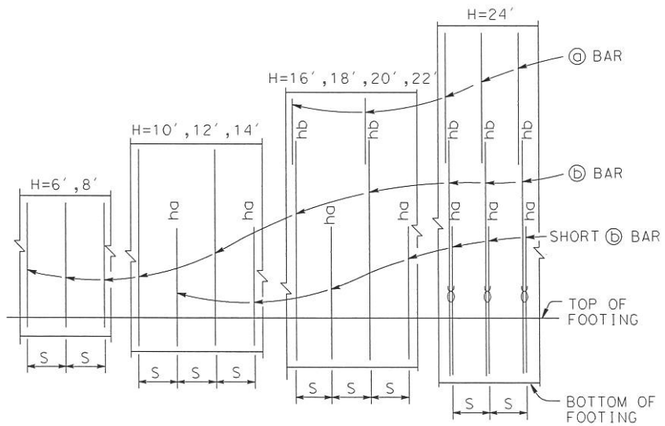

ELEVATION
NO SCALE

NOTES:
"ha" and "hb" above ⓑ bars indicate distance from top of footing to upper end of ⓑ bars, see table.
"S" is ⓑ bar spacing, see table.
℄ : 2 bar bundle

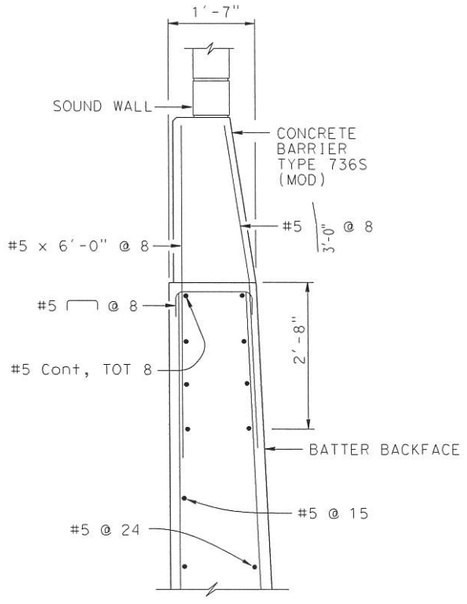

OPTIONAL DETAIL A
¾" = 1'-0"
For Details not shown, see "DETAIL A"

NOTES:
1. For sound wall and retaining wall Architectural finish or texture see Details elsewhere in Project Plans
2. For Details not shown and Drainage Notes see B3-5
3. Footing cover, 1'-6" minimum.

DIST	COUNTY	ROUTE	POST MILES TOTAL PROJECT	SHEET No.	TOTAL SHEETS
04	SCL	101, 237	45.2/45.8 2.7/3.3	692	736

REGISTERED CIVIL ENGINEER — DATE 5/11/18
6-20-18
PLANS APPROVAL DATE
REGISTERED PROFESSIONAL ENGINEER — GUOPING XU — No. 63977 — Exp. 9/30/2018 — CIVIL — STATE OF CALIFORNIA
The State of California or its officers or agents shall not be responsible for the accuracy or completeness of scanned copies of this plan sheet.
The Registered Civil Engineer for the project is responsible for the selection and proper application of the component design and any modifications shown.

DESIGN DATA

Design: AASHTO LRFD Bridge Design Specifications 4th edition with California Amendments

WS: 33 psf on Sound Wall and Barrier

LS: Varied surcharge on level ground surface

CT: 54 kip maximum traffic impact loading evenly distributed over 10 feet at top of the barrier and 1:1 distribution down and outward

EQE: Mononabe-Okabe Method
K_h = 0.3
K_v = 0.0

Soil: ø = 34°
γ = 120 pcf

Reinforced Concrete: f'c = 3600 psi
fy = 60,000 psi

Load Combinations and Limit States

Service I	Q=1.00DC+1.00EV+1.00EH+1.00LS+0.30WS
Service II	Q=1.00DC+1.00EV+1.00EH+1.00WS
Strength I	Q=αDC+βEV+1.50EH+1.75LS
Strength III	Q=αDC+βEV+1.50EH+1.40WS
Strength V	Q=αDC+βEV+1.50EH+1.35LS+0.40WS
Extreme I	Q=1.00DC+1.00EV+1.00EH+1.00EQD+1.00EQE
Extreme II	Q=1.00DC+1.00EV+1.00EH+1.00CT

Where:

Q: Force Effects
α: 1.25 or 0.90, Which ever Controls Design
β: 1.35 or 1.00, which ever Controls Design
DC: Dead Load of Structure Components
EV: Vertical Earth Fill Pressure
LS: Live Load Surcharge
EQE: Seismic Earth Pressure
EQD: Soil and Structure Components Inertia. Soil inertia ignored for stem design
WS: Wind Load on Sound Wall and Barrier
CT: Vehicular Collision Force

4. For sound wall and barrier reinforcement details, see "SOUND WALL - MASONRY BLOCK WITH BARRIER ON RETAINING WALL" sheet.
5. For H=6' through 14', extend ⓑ bars into Barrier for stem with haunch.
6. For H≥16', extend ⓐ bars into Barrier for stem with haunch.
7. For H≥8', provide additional #6 @ 12 ⓑ bar over a distance of 8'-0" measured from all expansion joints, begin wall and end wall locations.
(2) 8. For sound wall ⓐ Bars and other Sound Wall Details not shown, see "Sound Wall Reinforcement Table" on Standard Plan B15-6.

BRIDGE STANDARD DETAILS		
xs14-350-1 (FILE NO.)	October 2014 (APPROVAL DATE)	The components of the Bridge Standard Details have been prepared under the responsible charge of the Technical Owner, a registered civil engineer in the State of California

Refer to: http://www.dot.ca.gov/hq/esc/techpubs/manual/bridgemanuals/bridge-standard-detail-sheets/index.html

MODIFICATIONS SHOWN:
(1) MODIFIED DETAIL (2) SOUND WALL REBAR ADDED

FILE => 37E0072-h-rw5swb01.dgn
USERNAME => chua TIME PLOTTED => 12:18:44 AM DATE PLOTTED => 5/3/2018
ORIGINAL SCALE IN INCHES FOR REDUCED PLANS 0 1 2 3

STATE OF CALIFORNIA
DEPARTMENT OF TRANSPORTATION
DIVISION OF ENGINEERING SERVICES

UNIT: 0000
PROJECT NUMBER & PHASE: 0413000204
CONTRACT NO.: 04-4H2901

BRIDGE NO. 37E0072
POST MILE X

RETAINING WALL & SOUND WALL REPLACEMENT
RETAINING WALL TYPE 5SWB-DETAILS No. 1

DISREGARD PRINTS BEARING EARLIER REVISION DATES →
REVISION DATES: 6-19-14 | 8-5-14 | 7-14-16
SHEET 8 OF 14

DIST	COUNTY	ROUTE	POST MILES TOTAL PROJECT	SHEET No.	TOTAL SHEETS
04	SCL	101, 237	45.2/45.8 2.7/3.3	693	736

5/11/18
REGISTERED CIVIL ENGINEER — DATE

REGISTERED PROFESSIONAL ENGINEER
GUOPING XU
No. 63977
EXP. 9/30/2018
CIVIL
STATE OF CALIFORNIA

6-20-18
PLANS APPROVAL DATE

The State of California or its officers or agents shall not be responsible for the accuracy or completeness of scanned copies of this plan sheet.

The Registered Civil Engineer for the project is responsible for the selection and proper application of the component design and any modifications shown.

TABLE OF REINFORCING STEEL DIMENSIONS AND DATA

DESIGN H	6′	8′	10′	12′	14′	16′	18′	20′	22′	24′
W	9′-0"	9′-0"	9′-6"	10′-3"	11′-3"	12′-9"	14′-0"	15′-9"	17′-3"	18′-9"
F SPREAD FOOTING	1′-3"	1′-3"	1′-3"	1′-3"	1′-6"	1′-9"	2′-0"	2′-3"	2′-6"	2′-6"
STEM WITH HAUNCH, BATTER	0	1/2:12	1/2:12	1/2:12	1/2:12	1/2:12	1/2:12	1/2:12	1/2:12	3/8:12
STEM WITHOUT HAUNCH, BATTER	0	0	0	0	0	0	0	0	1/4:12	1/4:12
ⓐBARS						#7 @ 14	#7 @ 12	#7 @ 12	#8 @ 12	#6 @ 6
ⓑBARS	#8 @ 12	#8 @ 12	#7 @ 6	#7 @ 6	#7 @ 6	#9 @ 7	#9 @ 6	#10 @ 6	#10 @ 6	#8 @ 6 ϑ
ha			5′-0"	6′-0"	7′-0"	7′-8"	6′-0"	7′-0"	6′-9"	7′-6"
hb						11′-6"	12′-0"	13′-3"	16′-0"	15′-6"
ⓒBARS	#7 @ 12	#8 @ 12	#7 @ 6	#9 @ 6	#9 @ 6	#11@ 7	#8 @ 6 ϑ	#9 @ 6 ϑ	#9 @ 6 ϑ	#10 @ 6 ϑ
hz			3′-6"	4′-0"	4′-9"	7′-0"	5′-9"	6′-9"	7′-6"	9′-0"
SER I: B′(ft), q_0'(ksf)	7.5, 1.5	7.1, 1.9	7.2, 2.2	7.6, 2.5	8.3, 2.8	9.6, 3.0	10.6, 3.3	12.1, 3.6	13.3, 3.9	14.6, 4.1
STR, Ia: B′(ft), q_0(ksf)	7.9, 2.9	7.4, 3.3	7.4, 3.7	7.8, 4.1	8.3, 4.5	9.5, 4.8	10.5, 5.0	11.9, 5.6	13.1, 6.0	14.3, 6.4
STR, Ib: B′(ft), q_0(ksf)	6.0, 2.0	5.5, 2.5	5.6, 2.9	5.9, 3.3	6.4, 3.7	7.6, 3.9	8.7, 4.1	9.9, 4.5	11.0, 4.9	12.1, 5.2
STR, IIIa: B′(ft), q_0(ksf)	6.0, 2.7	6.0, 3.0	6.4, 3.4	7.0, 3.7	7.8, 4.1	9.1, 4.4	10.2, 4.6	11.7, 5.1	12.9, 5.4	14.2, 5.7
STR, IIIb: B′(ft), q_0(ksf)	5.3, 2.5	5.2, 2.8	5.5, 3.1	6.0, 3.3	6.7, 3.7	8.0, 3.9	8.9, 4.0	10.4, 4.4	11.5, 4.7	12.7, 5.0
STR, Va: B′(ft), q_0(ksf)	7.5, 2.8	7.1, 3.2	7.2, 3.5	7.6, 3.9	8.2, 4.3	9.4, 4.6	10.4, 4.9	11.8, 5.3	13.0, 5.8	14.3, 6.1
STR, Vb: B′(ft), q_0(ksf)	5.7, 2.2	5.3, 2.6	5.4, 3.0	5.8, 3.4	6.4, 3.8	7.7, 3.9	8.7, 4.0	10.0, 4.5	11.1, 4.9	12.2, 5.1
Ext I: B′(ft), q_0(ksf)	4.0, 3.4	3.0, 4.7	2.5, 6.5	2.1, 9.2	1.8, 13.3	2.1, 14.4	2.3, 16.9	2.6, 17.2	2.9, 18.4	3.3, 19.3
Ext II: B′(ft), q_0(ksf)	3.9, 3.3	4.3, 3.5	5.1, 3.5	6.0, 3.6	7.1, 3.7	8.1, 3.7	9.9, 3.8	11.9, 3.8	13.0, 4.3	14.4, 4.5

LEGEND:

SER: service limit state

STR: strength limit state

EXT: extreme event limit state

B′ : effective footing width (ft)

q_0' : net bearing stress (ksf)

q_0 : gross uniform bearing stress (ksf)

ϑ : 2 bar bundle

MODIFICATIONS SHOWN:

(1) DOES NOT APPLY

BRIDGE STANDARD DETAILS

xs14-350-2 (FILE NO.) | October 2014 (APPROVAL DATE)

The components of the Bridge Standard Details have been prepared under the responsible charge of the technical Owner, a registered civil engineer in the State of California

Refer to: http://www.dot.ca.gov/hq/esc/techpubs/manual/bridgemanuals/bridge-standard-detail-sheets/index.html

FILE => 37E0072-h-rw5swb02.dgn
USERNAME => chua *TIME PLOTTED => 12:18:44 AM* *DATE PLOTTED => 5/3/2018*

ORIGINAL SCALE IN INCHES FOR REDUCED PLANS 0 1 2 3

STATE OF CALIFORNIA
DEPARTMENT OF TRANSPORTATION

DIVISION OF ENGINEERING SERVICES

UNIT: 0000
PROJECT NUMBER & PHASE: 0413000204 CONTRACT NO.: 04-4H2901

BRIDGE NO. 37E0072
POST MILE X

RETAINING WALL & SOUND WALL REPLACEMENT
RETAINING WALL TYPE 5SWB-DETAILS No. 2

DISREGARD PRINTS BEARING EARLIER REVISION DATES →

REVISION DATES				SHEET	OF
~~6-18-14~~	~~8-5-14~~	7-14-16		9	14

DIST	COUNTY	ROUTE	POST MILES TOTAL PROJECT	SHEET No.	TOTAL SHEETS
04	SCL	101, 237	45.2/45.8 2.7/3.3	694	736

5/11/18
REGISTERED CIVIL ENGINEER — DATE

REGISTERED PROFESSIONAL ENGINEER
GUOPING XU
No. 63977
Exp. 9/30/2018
CIVIL
STATE OF CALIFORNIA

6-20-18
PLANS APPROVAL DATE

The State of California or its officers or agents shall not be responsible for the accuracy or completeness of scanned copies of this plan sheet.

The Registered Civil Engineer for the project is responsible for the selection and proper application of the component design and any modifications shown.

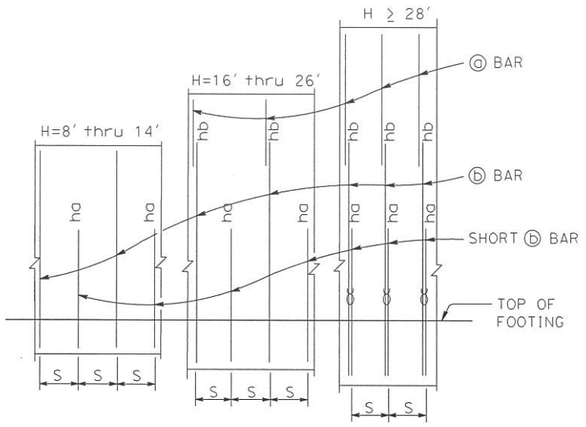

ELEVATION
No Scale

NOTES:
"ha", "hb" above ⓑ bars indicate distance from top of footing to upper end of ⓑ bars, see table.
"S" is ⓑ bar spacing, see table.

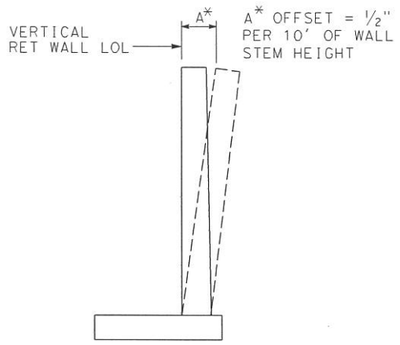

WALL OFFSET
No Scale

Values for offsetting forms to be determined by the Engineer

DESIGN DATA

Design: AASHTO LRFD Bridge Design Specifications, 4th edition with California Amendments

WS: 33 psf on Sound wall

LS: Varied surcharge on level ground surface

EQE: Mononabe-Okabe Method
K_h = 0.3
K_v = 0.0

Soil: Ø = 34°
γ = 120 pcf

Reinforced Concrete: f'c = 3600 psi
fy = 60,000 psi

Load Combinations and Limit States

Service I	Q=1.00DC+1.00EV+1.00EH+1.00LS+0.30WS+Td
Service II	Q=1.00DC+1.00EV+1.00EH+1.00WS+Td
Strength I	Q=αDC+βEV+1.50EH+1.75LS+Td
Strength III	Q=αDC+βEV+1.50EH+1.40WS+Td
Strength V	Q=αDC+βEV+1.50EH+1.35LS+0.40WS+Td
Extreme I	Q=1.00DC+1.00EV+1.00EH+1.00EQD+1.00EQE+Td

Where: Q: Force Effects
α: 1.25 or 0.90, Which ever Controls Design
β: 1.35 or 1.00, which ever Controls Design
DC: Dead Load of Structure Components
EV: Vertical Earth Fill Pressure
LS: Live Load Surcharge
EQE: Seismic Earth Pressure
EQD: Soil and Structure Components Inertia
Soil inertia ignored for stem design
WS: Wind Load on Sound wall
Td: Anchor Design Load

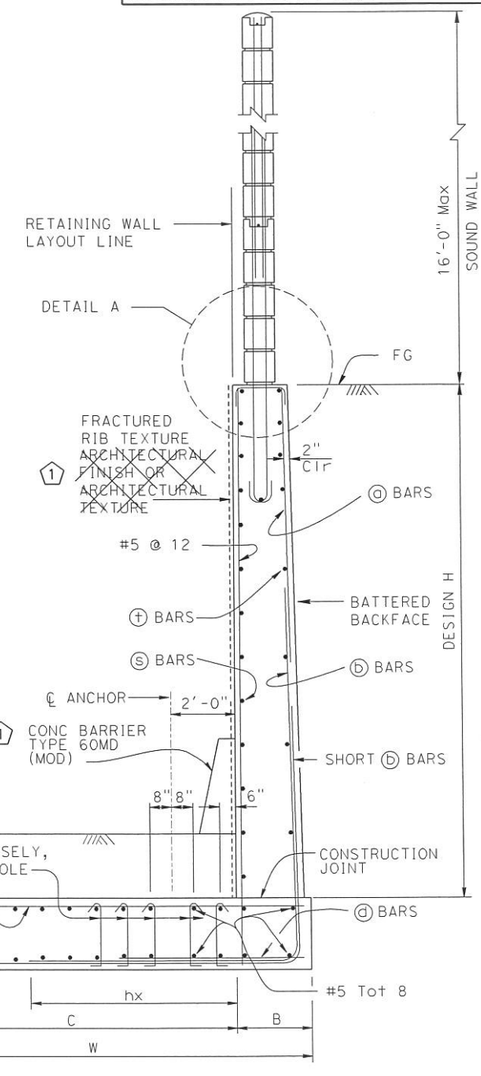

SPREAD FOOTING SECTION
1

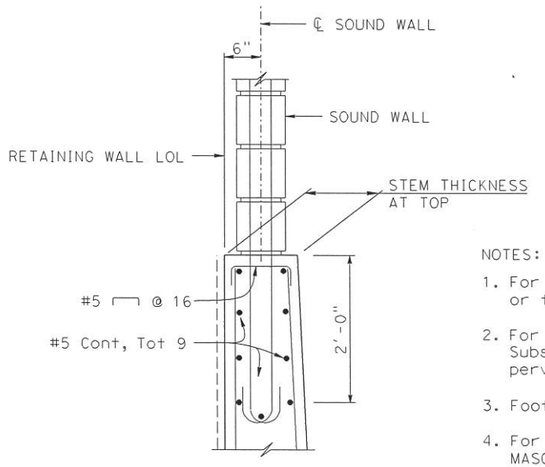

DETAIL A
1" = 1'-0"

NOTES:
1. For Sound wall and Retaining wall Architectural finish or texture see Details elsewhere in Project Plans.
2. For details not shown and drainage notes, see (B3-5). Substitution of geocomposite drain for pervious backfill material is not permitted.
3. Footing cover, 2'-0" minimum.
4. For Sound wall reinforcement details, see "SOUND WALL - MASONRY BLOCK ON RETAINING WALL" sheet.
5. Shift ⓑ bars and ⓓ bars as required to clear formed hole for ground anchor.
6. Footing is designed to resist 1.33 Td assuming the maximum anchor spacing shown in the table.

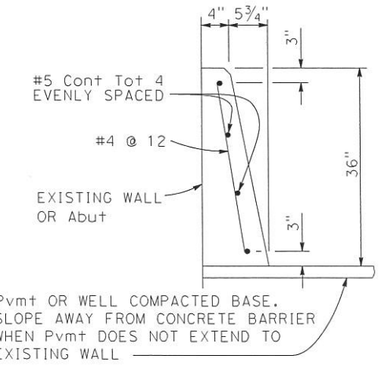

CONCRETE BARRIER TYPE 60MD (MOD)
2
No Scale

BRIDGE STANDARD DETAILS		
xs14-380-1	July 2014	The components of the Bridge Standard Details have been prepared under the responsible charge of the Technical Owner, a registered civil engineer in the State of California
FILE NO.	APPROVAL DATE	

Refer to: http://www.dot.ca.gov/hq/esc/techpubs/manual/bridgemanuals/bridge-standard-detail-sheets/index.html

MODIFICATIONS SHOWN:
1 MODIFIED DETAIL
2 ADDED DETAIL

FILE => 37E0072-k-rw7sw01.dgn
USERNAME => chua
TIME PLOTTED => 12:18:45 AM
DATE PLOTTED => 5/3/2018
ORIGINAL SCALE IN INCHES FOR REDUCED PLANS 0 1 2 3

STATE OF CALIFORNIA
DEPARTMENT OF TRANSPORTATION

DIVISION OF ENGINEERING SERVICES

UNIT: 0000
PROJECT NUMBER & PHASE: 0413000204
CONTRACT NO.: 04-4H2901

BRIDGE NO. 37E0072
POST MILE X

RETAINING WALL & SOUND WALL REPLACEMENT
RETAINING WALL TYPE 7SW - DETAILS No.1

DISREGARD PRINTS BEARING EARLIER REVISION DATES

REVISION DATES				SHEET	OF
6-19-14	8-28-15	7-14-16		10	14

DIST	COUNTY	ROUTE	POST MILES TOTAL PROJECT	SHEET No.	TOTAL SHEETS
04	SCL	101, 237	45.2/45.8 2.7/3.3	695	736

REGISTERED CIVIL ENGINEER — DATE 5/11/18

6-20-18
PLANS APPROVAL DATE

REGISTERED PROFESSIONAL ENGINEER — GUOPING XU — No. 63977 — Exp. 9/30/2018 — CIVIL — STATE OF CALIFORNIA

The State of California or its officers or agents shall not be responsible for the accuracy or completeness of scanned copies of this plan sheet.

The Registered Civil Engineer for the project is responsible for the selection and proper application of the component design and any modifications shown.

TABLE OF WALL DIMENSIONS, REINFORCING STEEL, AND BEARING STRESS

DESIGN H	8′	10′	12′	14′	16′	18′	20′	22′	24′	26′	28′	30′	32′
W	9′-0″	10′-0″	7′-0″	7′-6″	8′-6″	9′-3″	10′-3″	11′-3″	12′-3″	13′-0″	14′-3″	15′-3″	16′-3″
C	7′-9″	8′-9″	5′-6″	6′-0″	6′-9″	7′-3″	8′-0″	8′-6″	9′-6″	10′-0″	10′-10″	11′-6″	12′-5″
B	1′-3″	1′-3″	1′-6″	1′-6″	1′-9″	2′-0″	2′-3″	2′-9″	2′-9″	3′-0″	3′-5″	3′-9″	3′-10″
F	1′-6″	2′-0″	2′-4″	2′-4″	2′-6″	2′-6″	2′-9″	2′-9″	3′-0″	3′-3″	3′-6″	3′-9″	4′-0″
STEM THICKNESS AT TOP	1′-0″	1′-0″	1′-3″	1′-3″	1′-7″	1′-9″	2′-0″	2′-0″	2′-0″	2′-0″	2′-0″	2′-3″	2′-3″
BATTER	0	0	0	0	0	0	0	1/4:12	1/4:12	1/4:12	1/2:12	1/2:12	1/2:12
ⓐ BARS					#5 @ 14	#6 @ 13	#6 @ 13	#6 @ 13	#6 @ 11	#7 @ 12	#7 @ 11	#7 @ 10	#8 @ 11
ⓑ BARS	#5 @ 6	#5 @ 5.5	#6 @ 5	#6 @ 5	#8 @ 7	#8 @ 6.5	#9 @ 6.5	#9 @ 6.5	#9 @ 5.5	#10 @ 6	#10 @ 110	#10 @ 100	#11 @ 110
ha	7′-10″	9′-10″	5′-3″	6′-0″	6′-9″	7′-6″	7′-3″	9′-0″	9′-9″	9′-3″	11′-3″	13′-0″	13′-0″
hb					13′-0″	13′-0″	13′-0″	14′-6″	15′-6″	18′-6″	20′-6″	21′-6″	23′-0″
hx	5′-3″	6′-0″	5′-3″	5′-9″	6′-6″	7′-0″	7′-9″	7′-6″	8′-3″	9′-9″	10′-6″	11′-0″	12′-2″
ⓓ BARS	#5 @ 12	#5 @ 11	#5 @ 10	#5 @ 10	#5 @ 14	#5 @ 13	#5 @ 13	#5 @ 13	#5 @ 11	#5 @ 12	#5 @ 11	#5 @ 10	#5 @ 11
ⓓ BAR LENGTH	3′-6″	3′-6″	3′-6″	3′-6″	4′-6″	7′-0″	7′-6″	10′-9″	11′-9″	12′-6″	13′-9″	14′-9″	15′-9″
ⓔ BARS								#4 @ 13	#4 @ 11	#4 @ 12	#4 @ 11	#4 @ 10	#4 @ 11
ⓢ Bars	#4 @ 12	#4 @ 12	#5 @ 15	#5 @ 15	#5 @ 12	#5 @ 12	#6 @ 12	#6 @ 12	#6 @ 12	#6 @ 12	#6 @ 12	#7 @ 12	#7 @ 12
ⓣ Bars	#4 @ 18	#4 @ 18	#4 @ 18	#4 @ 18	#4 @ 12	#4 @ 12	#4 @ 12	#4 @ 12	#4 @ 12	#5 @ 12	#5 @ 12	#5 @ 12	#5 @ 12
Td (KIPS/FT)	0	0	5.25	7.5	9.0	11.25	12.75	15.0	16.5	21.0	21.75	24.75	27.75
To (KIPS/FT)	0	0	*	*	*	*	*	*	*	*	*	*	*
Tp = Larger of 1.33 Td & 1.25 To (KIPS/FT)	0	0	*	*	*	*	*	*	*	*	*	*	*
Max ANCHOR SPACING			10′-6″	9′-6″	7′-9″	6′-3″	7′-9″	8′-6″	8′-0″	6′-3″	6′-0″	5′-3″	4′-9″
SER I: B′(ft), q'_0 (ksf)	6.3, 0.6	6.9, 0.7	5.7, 2.1	6.1, 2.4	7.4, 2.4	8.1, 2.7	8.1, 2.8	8.8, 3.0	10.9, 3.0	11.4, 3.5	12.6, 3.5	13.6, 3.7	14.7, 3.8
STR Ia: B′(ft), q_0(ksf)	6.5, 1.3	6.7, 1.6	5.4, 3.3	5.7, 3.7	6.7, 3.8	7.4, 4.2	8.2, 4.3	8.9, 4.8	9.8, 4.9	10.1, 5.5	11.2, 5.6	12.1, 5.9	12.8, 6.2
STR, Ib: B′(ft), q_0(ksf)	5.7, 1.2	5.7, 1.5	4.6, 3.3	5.0, 3.7	5.9, 3.8	6.6, 4.0	7.3, 4.2	7.9, 4.6	8.7, 4.7	9.1, 5.3	10.0, 5.4	10.8, 5.7	11.5, 6.0
STR, IIIa: B′(ft), q_0(ksf)	5.0, 1.9	5.7, 2.6	4.9, 4.0	5.4, 4.4	6.4, 4.0	7.2, 4.5	8.2, 4.6	9.0, 4.9	10.0, 4.9	10.4, 5.4	11.6, 5.4	12.6, 5.7	13.4, 5.8
STR, IIIb: B′(ft), q_0(ksf)	3.7, 2.3	4.2, 2.8	4.0, 4.2	4.5, 4.5	5.6, 4.2	6.3, 4.5	7.2, 4.5	8.0, 4.8	8.9, 4.7	9.4, 5.3	10.4, 5.3	11.3, 5.3	12.1, 5.6
STR, Va: B′(ft), q_0(ksf)	6.0, 1.4	6.4, 1.7	5.2, 3.4	5.5, 3.8	6.6, 3.9	7.3, 4.3	8.2, 4.5	8.8, 4.8	9.8, 4.9	10.2, 5.6	11.2, 5.5	12.2, 5.9	12.9, 6.1
STR, Vb: B′(ft), q_0(ksf)	5.0, 1.3	5.2, 1.6	4.4, 3.4	4.8, 3.8	5.7, 3.8	6.4, 4.2	7.2, 4.4	7.8, 4.7	8.7, 4.8	9.1, 5.5	10.0, 5.4	10.9, 5.8	11.6, 6.0
Ext I: B′(ft), q_0(ksf)	3.4, 2.0	3.1, 3.6	2.4, 6.5	2.6, 8.1	3.0, 7.7	3.3, 9.0	3.5, 9.4	3.9, 10.1	4.3, 10.4	4.4, 11.9	4.9, 11.9	5.3, 12.7	5.5, 13.4

(2)

NOTE:

ⓔ Bar spacing shown is along the length of the retaining wall.
* denotes values to be determined by designer, and this note is removed afterwards.

(1)

SYMBOLS:

SER: service limit state
STR: strength limit state
EXT: extreme event limit state
B′: effective footing width (ft)
q'_0: net bearing stress (ksf)
q_0: gross uniform bearing stress (ksf)
ⓧ: 2 bar bundle
To: Anchor Lockoff Load
Tp: Anchor Factored Test Load

BRIDGE STANDARD DETAILS		
xs14-380-2 (FILE NO.)	July 2014 (APPROVAL DATE)	*The components of the Bridge Standard Details have been prepared under the responsible charge of the Technical Owner, a registered civil engineer in the State of California*

Refer to: http://www.dot.ca.gov/hq/esc/techpubs/manual/bridgemanuals/bridge-standard-detail-sheets/index.html

MODIFICATIONS SHOWN:
(1) DOES NOT APPLY (2) FOOTING WIDTH ADJUSTED

FILE => 37E0072-k-rw1sw02.dgn
USERNAME => .chua *TIME PLOTTED => 12:18:45 AM* *DATE PLOTTED => 5/3/2018*

ORIGINAL SCALE IN INCHES FOR REDUCED PLANS 0 1 2 3

STATE OF CALIFORNIA
DEPARTMENT OF TRANSPORTATION

DIVISION OF ENGINEERING SERVICES

UNIT: 0000
PROJECT NUMBER & PHASE: 0413000204 CONTRACT NO.: 04-4H2901

BRIDGE NO. 37E0072
POST MILE X

RETAINING WALL & SOUND WALL REPLACEMENT
RETAINING WALL TYPE 7SW - DETAILS NO.2

DISREGARD PRINTS BEARING EARLIER REVISION DATES →

REVISION DATES: 6-18-18 | 7-14-16

SHEET 11 OF 14

DIST	COUNTY	ROUTE	POST MILES TOTAL PROJECT	SHEET No	TOTAL SHEETS
04	SCL	101, 237	45.2/45.8 2.7/3.3	696	736

REGISTERED CIVIL ENGINEER — DATE 5/11/18

6-20-18
PLANS APPROVAL DATE

REGISTERED PROFESSIONAL ENGINEER — GUOPING XU — No. 63977 — EXP. 9/30/2018 — CIVIL — STATE OF CALIFORNIA

The State of California or its officers or agents shall not be responsible for the accuracy or completeness of scanned copies of this plan sheet.

WMH CORPORATION
1221 Broadway, Suite 800
Oakland, CA 94612

VTA
3331 N First St
Building B
San Jose, Ca 95134

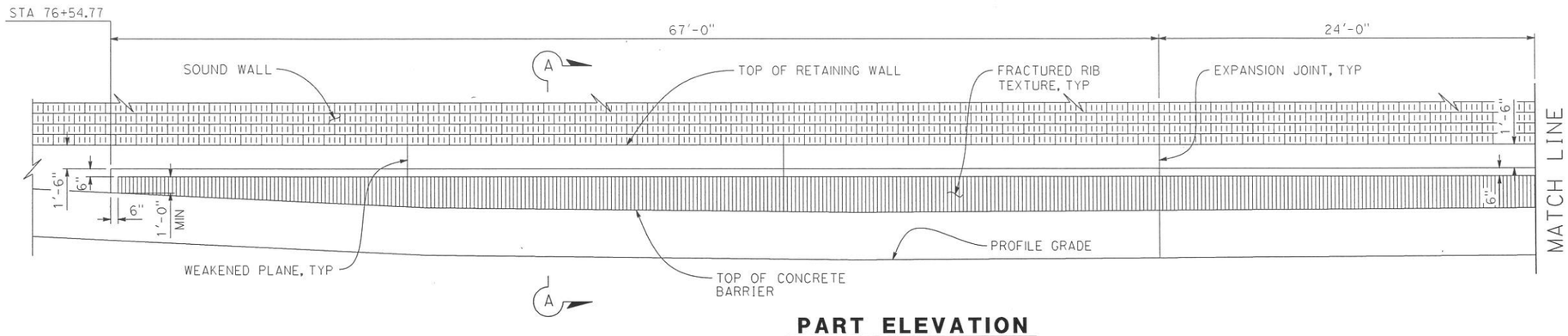

PART ELEVATION
1/4"=1'-0"

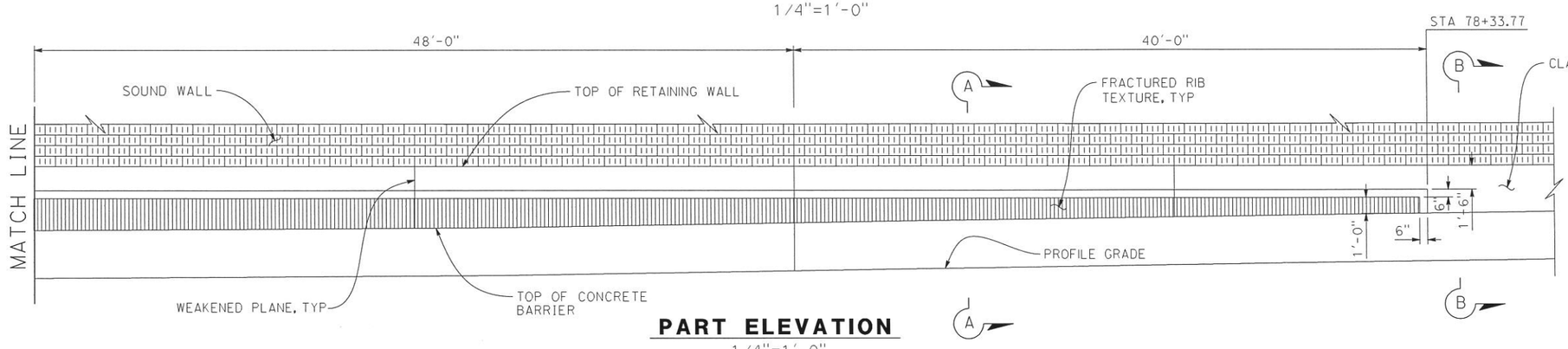

PART ELEVATION
1/4"=1'-0"

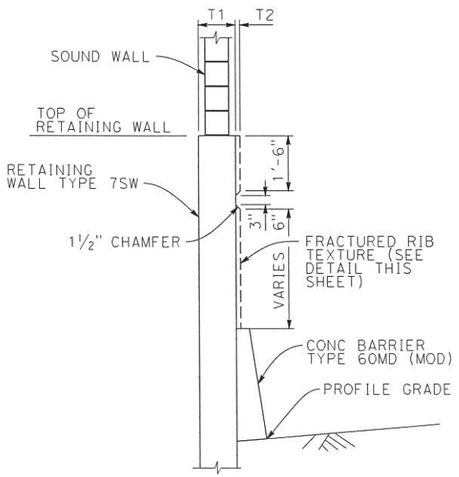

SECTION A-A
1/2" = 1'-0"

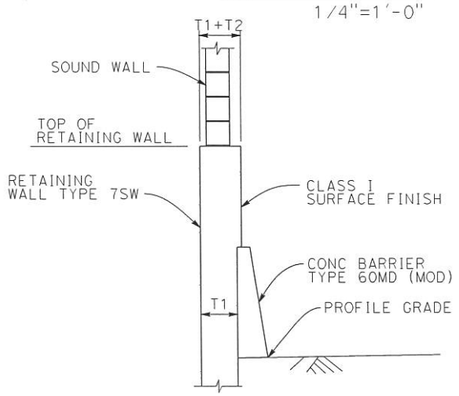

SECTION B-B
1/2" = 1'-0"

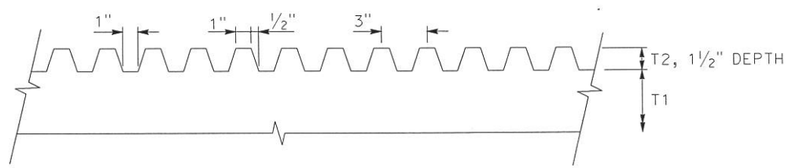

FRACTURED RIB TEXTURE
3"=1'-0"

T1 = WALL STRUCTURAL THICKNESS
T2 = DEPTH OF FRACTURED RIB TEXTURE

NOTE:
The Contractor shall verify all controlling field dimensions before ordering a fabricating any material

DESIGN OVERSIGHT — SIGN OFF DATE 5-11-2018

	BY	CHECKED
DESIGN	G. XU	S. FU
DETAILS	C. HUA	S. DWYER
QUANTITIES	G. XU	S. FU

PREPARED FOR THE STATE OF CALIFORNIA
DEPARTMENT OF TRANSPORTATION

STEVE LOUPE
PROJECT ENGINEER

BRIDGE NO. 37E0072
POST MILES X

RETAINING WALL & SOUND WALL REPLACEMENT
AESTHETIC TREATMENT DETAILS

DESIGN DETAIL SHEET (ENGLISH) (REV. 03/14/12)

ORIGINAL SCALE IN INCHES FOR REDUCED PLANS 0 1 2 3

UNIT: 0000
PROJECT NUMBER & PHASE: 0413000204
CONTRACT NO.: 04-4H2901

DISREGARD PRINTS BEARING EARLIER REVISION DATES

REVISION DATES				SHEET	OF
2/23/18				12	14

FILE => 37E0072-y-atdt.dgn

DATE PLOTTED => 5/3/2018 TIME PLOTTED => 12:18:46 AM
USERNAME => CHUA

BENCHMARK:

ELEVATIONS ARE IN TERMS OF THE NORTH AMERICA DATUM OF 1988 (NAD88) AND CORRESPOND TO VALUES PUBLISHED BY THE SANTA CLARA VALLEY WATER DISTRICT (SCVWD) AND THAT AGENCY'S VERTICAL SURVEY CONTROL NETWORK; VALUES ARE ALSO EXPRESSED IN US FEET. DIFFERENTIAL LEVEL MEASUREMENTS WERE RECORDED TO AND FROM ALL SURVEY CONTROL POINTS USING A LEICA DNA03 DIGITAL LEVEL. A FULLY-CONSTRAINED ADJUSTMENT OF ALL LEVEL MEASUREMENTS WAS PERFORMED USING STAR*NET® LEAST SQUARES ADJUSTMENT SOFTWARE, VERSION 7.1. ELEVATIONS OF THE FOLLOWING SCVWD BENCHMARKS WERE HELD FIXED IN SAID ADJUSTMENT: BM180, BM483, BM487, BM902, AND BM915. BENCHMARK DATASHEETS CAN BE OBTAINED THROUGH THE SCVWD'S VERTICAL CONTROL DATABASE AT HTTP://WWW.VALLEYWATER.ORG/SERVICES/VCN.ASPX

BM 487 NORTHING: 1973259.23, EASTING: 6118408.43 ELEV: 22.27

DIST	COUNTY	ROUTE	POST MILES TOTAL PROJECT	SHEET No	TOTAL SHEETS
04	SCL	237, 101	2.7/3.3 45.2/45.8	697	736

REGISTERED CIVIL ENGINEER — 12-8-17 DATE

6-20-18
PLANS APPROVAL DATE

REGISTERED PROFESSIONAL ENGINEER — GARY PARIKH — No. 666 — Exp. 12/31/19 — GEOTECHNICAL — STATE OF CALIFORNIA

The State of California or its officers or agents shall not be responsible for the accuracy or completeness of scanned copies of this plan sheet.

VTA
3331 N FIRST STREET, BUILDING B
San Jose, CA 95134

PARIKH CONSULTANTS, INC.
2360 QUME DRIVE, SUITE A
SAN JOSE, CA 95131

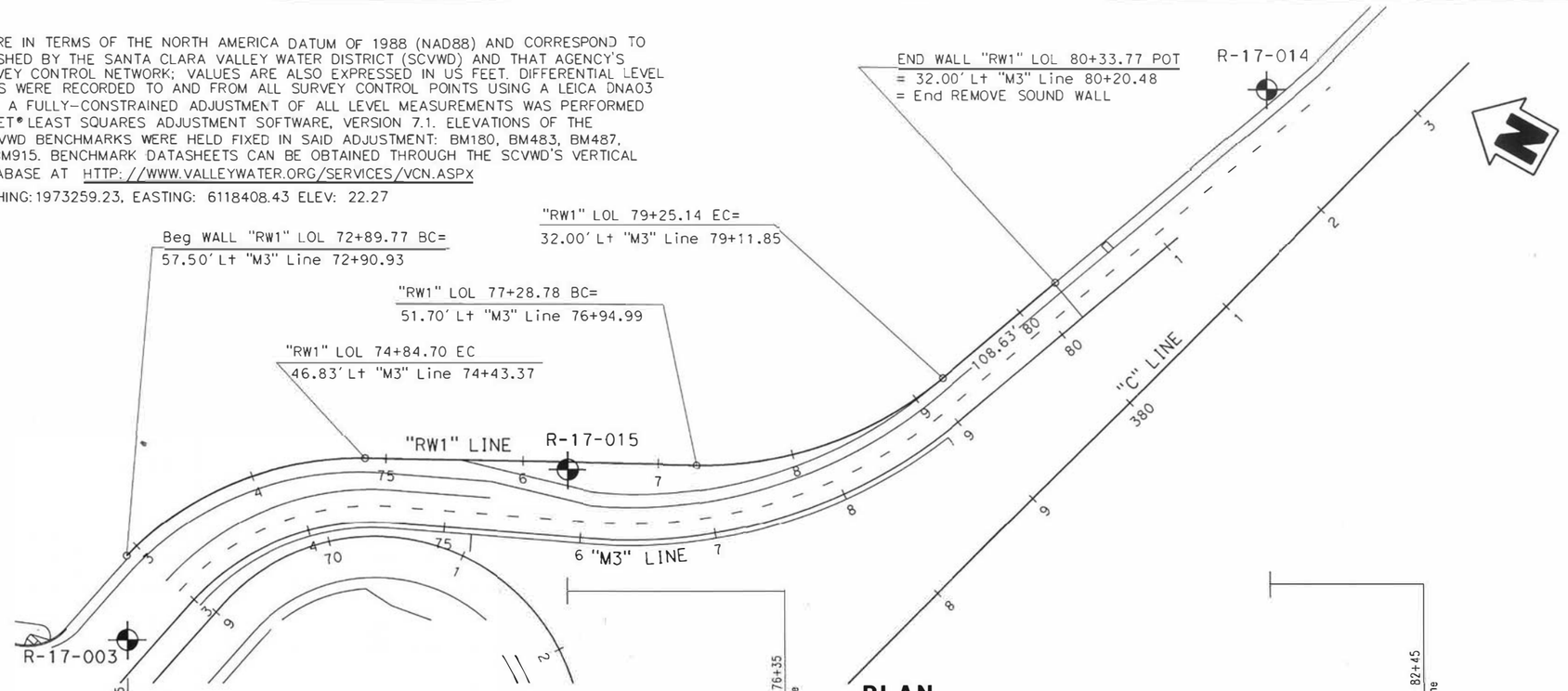

PLAN
SCALE: 1"=50'

NOTES:

Standard Penetration Test Sampler: I.D. = 1.4"; O.D. = 2" Modified California Sampler: I.D. = 2.5"; O.D. = 3" Hammer Assembly: A 140 lb hammer with a 30" drop (Automatic Hammer)

This LOTB sheet was prepared in accordance with the Caltrans Soil & Rock, Logging, Classification, and Presentation Manual (2010)

See Caltrans 2015 Standard Plans A10F, A10G and A10H for Soil and Rock Legend.

All dimensions are in feet unless otherwise shown

Base map and a topographic map were provided by WMH (2017). The top of boring elevations is read from the topographic map based on NAD88.

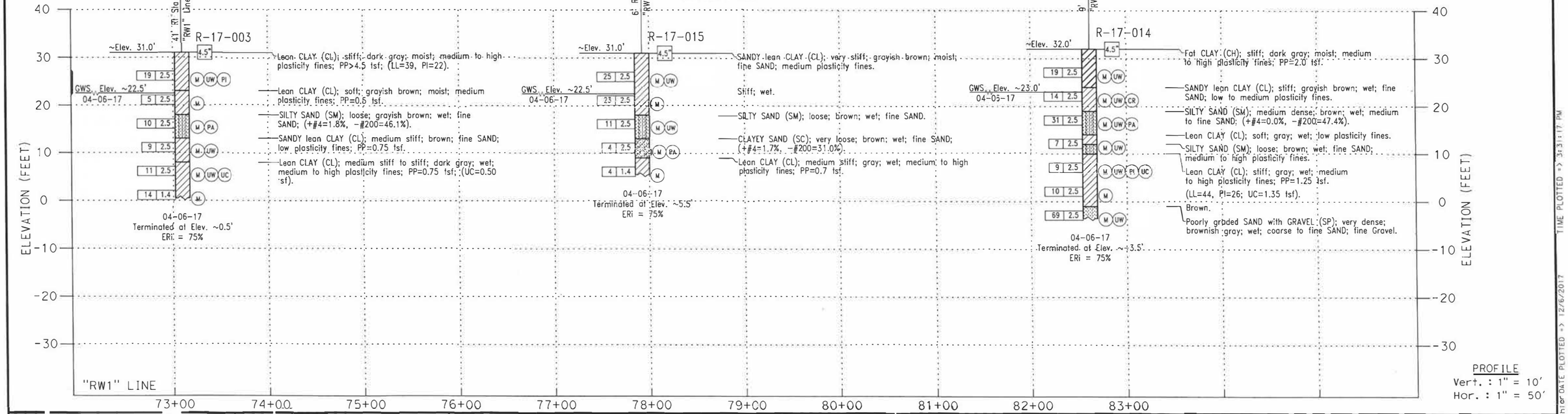

PROFILE
Vert. : 1" = 10'
Hor. : 1" = 50'

DESIGN OVERSIGHT: Sabin Shyu — SIGN OFF DATE 5-11-2018	DRAWN BY: KIM OUYANG	V. SANTOS	PREPARED FOR THE STATE OF CALIFORNIA DEPARTMENT OF TRANSPORTATION	PETER WEI, PROJECT ENGINEER	BRIDGE NO. 37E0072	RETAINING WALL AND SOUND WALL REPLACEMENT	
	CHECKED BY: PETER WEI	FIELD INVESTIGATION BY: DATE: APRIL 2017			POST MILES	LOG OF TEST BORINGS	

DESIGN GENERAL PLAN SHEET (ENGLISH) (REV. 03/14/12)

ORIGINAL SCALE IN INCHES FOR REDUCED PLANS 0 1 2 3

UNIT: 0000
PROJECT NUMBER & PHASE: 0413000204 CONTRACT NO.: 04-4H2901

DISREGARD PRINTS BEARING EARLIER REVISION DATES →

REVISION DATES				SHEET	OF
12-13-17				13	14

FILE => LOTB.dgn

USERNAME => cgouthier DATE PLOTTED => 12/6/2017 TIME PLOTTED => 3:31:17 PM

DIVISION OF ENGINEERING SERVICES - GEOTECHNICAL SERVICES				
As-Built Log of Test Borings sheet is considered an informational document only. As such, the State of California registration seal with signature, license number and registration certificate expiration date confirm that this is a true and accurate copy of the original document. This drawing is available and presented only for the convenience of any bidder, contractor or other interested party.				
DIST.	COUNTY	ROUTE	POST MILES-TOTAL PROJECT	Sheet No. / Total Sheets
4	SCL	237/101	237-PM 2.7/3.3; 101-PM 45.2/45.8	
REGISTERED CIVIL ENGINEER			12-8-17 DATE	
MATHILDA AVENUE IMPROVEMENTS AT SR 237 AND US 101				
LOG OF TEST BORINGS				
NOTE: A COPY OF THIS LOG OF TEST BORINGS IS AVAILABLE AT OFFICE OF STRUCTURE MAINTENANCE AND INVESTIGATIONS, SACRAMENTO, CALIFORNIA		CU: EA: 04-4H2901	BRIDGE No. 37E0072	Sheet / of 14 / 14

GARY PARIKH
No. G.E. 666
Exp. 12/31/19
GEOTECHNICAL
REGISTERED PROFESSIONAL ENGINEER
STATE OF CALIFORNIA

AS BUILT PLANS
Contract No. 60-477271
Date Completed
Document No. 4000246?

FIELD STUDY			
DRAWN			
CHECKED			
Approved for Structures Design			

U-181(36) U-032-1 (7)

DIST	COUNTY	ROUTE	SECTION	SHEET NO.	TOTAL SHEETS
IV	SCL	9114	A	15	15

FED. ROAD DIST. NO.	STATE	PROJ. NO.	FISCAL YEARS	SHEET NO.	TOTAL SHEETS
7	CAL.			221	233

March 21, 1962

ROUTE 113

PROFILE M LINE

EL 47.25

EL 34.4 | EL 33.4 | EL 33.6 | EL 34.3 | EL 34.0

EL 30.25

Abut 1 | Bent 2 | Bent 3 | Abut 5

PILE "E" 15 Metal

PILE "E" 13 Metal

PILE "E" 13 Metal

PILE "E" 13 Metal

PILE "E" 13 Metal

Drilled

Minimum Penetration 17 HRS. Set 86.6 Tons Brg

Minimum Penetration 16 HRS. Set 86.6 Tons Brg

Minimum Penetration

Average

Maximum

Brg. Value (Tons) ENR

Average Penetration Brg Value (Tons) ENR

Very soft buff fine sandy silt

Slightly compact mottled buff-brown fine sandy clayey silt-attic gravel

Slightly compact gray brown silty fine sand to fine sand. Soft loose dark gray fine sandy silty clay to slightly silty sand.

Stiff to soft to stiff light gray fine sandy clayey silt

Stiff mottled gray-green fine sandy clayey silt

Very stiff mottled gray-green fine sandy clayey silt to stiff slightly compact alternating lenses of very green to very dark green fine sand to fine sandy clay to olive drab silt, few fine sand lenses.

Very stiff gray fossiliferous mottled clayey silt

Stiff grey olive green clayey silt some fine sand

Stiff grey clay

Stiff to very stiff gray-green silty clay

Stiff mottled gray-green very fine sandy silty clay

Hard mottled gray-green very fine sandy silty clay

Dense brown fine to medium sand, some silty clay binder

Dense gray medium sand

6-16-57

5-29-57

BM USC&GS 6-175 "JC 1954 Stamped USC&GS DSC "ELEV C-372.120" ELEV 33.857

CONTRACT No. 60-477271-F
DATE AWARDED JAN 9 1962

AS BUILT
RESIDENT ENGINEER
REVISIONS BY DATE

PROFILE SCALE 1"=10'

CLASSIFICATION OF MATERIAL BASED ON STANDARD GRADE SIZE LIMITS

Diagram showing the basis for estimates of grade size distribution used in determination of class names. If gravel is present in appreciable amounts the term "gravelly" may be added to the class name, viz. "gravelly sand". The terms "coarse", "medium" and "fine" when used to describe sand, silt and gravel, refer to standard grade size limits.

SILT PERCENTAGES

LEGEND OF EARTH MATERIALS

- Gravel
- Sand
- Silt
- Clay
- Sandy Clay or Clayey Sand
- Sandy Silt or Silty Sand
- Silty Clay or Clayey Silt
- Peat and/or Organic Matter
- Fill Material
- Igneous Rock
- Sedimentary Rock
- Metamorphic Rock

LEGEND OF BORING OPERATIONS

- Plan of any boring
- Penetrometer
- 2½" Cone Penetrometer
- SB Sampler boring (DRY)
- RB Rotary boring (WET)
- AB Auger boring (DRY)
- JB Jet boring
- CB Core boring
- TP Test pit

1" Soil Tube | Rotary Boring | Penetration Boring

NOTES

Classification of earth material as shown on this sheet is based upon field inspection and is not to be construed to imply mechanical analysis.

STATE OF CALIFORNIA
DEPARTMENT OF PUBLIC WORKS
DIVISION OF HIGHWAYS

ROUTE 114-/68 SEPARATION

LOG OF TEST BORINGS

SCALE AS NOTED	BRIDGE 37-177	FILE	DRAWING C-5674-14

PREL. DRAWING No. P-5674 70 62

I HEREBY CERTIFY THAT THIS IS A TRUE AND ACCURATE COPY OF THE ABOVE DOCUMENT TAKEN UNDER MY DIRECTION AND CONTROL ON THIS DATE IN SACRAMENTO, CALIFORNIA PURSUANT TO AUTHORIZATION BY THE DIRECTOR OF PUBLIC WORKS.

DATE / SIGNATURE / TITLE

CIVILDOC www.civildoc.com

INDEX OF PLANS

SHEET NO	DESCRIPTION
GC-A	INDEX OF PLANS, VICINITY MAP AND ABBREVIATIONS
GC-1	CIVIL GENERAL NOTES
GC-2	CIVIL LAYOUT
GC-3	CIVIL CONSTRUCTION DETAILS
GC-4	CIVIL CONSTRUCTION DETAILS
GC-5	CIVIL CONSTRUCTION DETAILS
GC-6	CIVIL CONSTRUCTION DETAILS
GC-7	CIVIL CONSTRUCTION DETAILS
XC212-A	SIGNAL PLAN INDEX
XC212-1 TO XC212-29	SIGNAL PLANS

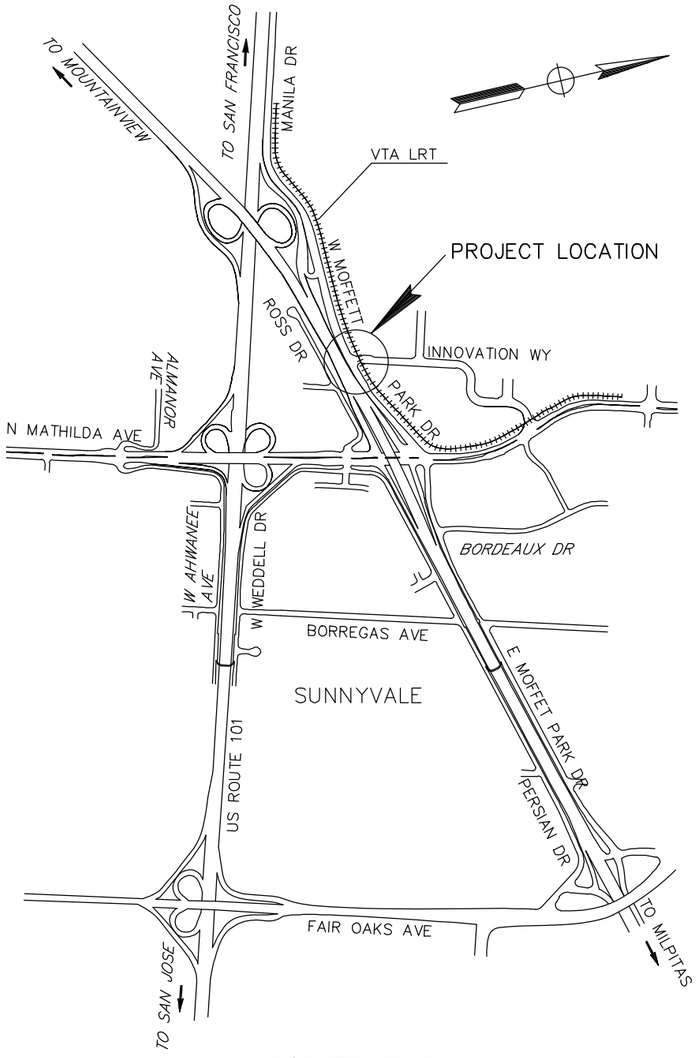

VICINITY MAP

ABBREVIATIONS

BC	BEGIN HORIZONTAL CURVE
BCR	BEGIN CURB RETURN
BEG	BEGIN
CR	CLEARANCE
CR	CURB RAMP
C&G	CURB & GUTTER
DI	DRAINAGE INLET
EC	END HORIZONTAL CURVE
Exist	EXISTING
HMA	HOT MIX ASPHALT
HT	HEIGHT
L	LENGTH
LT	LEFT
PCC	PORTLAND CEMENT CONCRETE/ POINT OF COMPOUND CUVE
R	RADIUS
Rel	RELOCATE
Rem	REMOVE
Ret	RETAINING
RT	RIGHT
SD	STORM DRAIN
SDMH	STORM DRAIN MANHOLE
St	STREET
TC	TOP OF CURB
Typ	TYPICAL
Var	VARIES
ø	DIAMETER

NO.	DATE	REVISIONS
A	05-04-18	100% SUBMITTAL

REGISTERED PROFESSIONAL ENGINEER — JORGE E. SANCHEZ PEREZ — No. C 86790 EXP 03-31-19 CIVIL — STATE OF CALIFORNIA

SUBMITTED: RSE, INC. — 1075 Old County Road, Belmont, CA 94002 — www.rserail.com

DESIGNED	CHECKED
J. SANCHEZ	P. LEONG
DRAWN	CAD FILE NAME
C. CHEUK	

Santa Clara Valley Transportation Authority — Solutions that move you

APPROVED: WMH Corporation, Inc. — 50 West San Fernando Street, Suite 950, San Jose, CA 95113-2412 — Tel (408) 971-7300 — Fax (408) 971-7400

CAD FILE DATE	SCALE
05-04-18	NTS
SUBMITTAL DATE	APPROVAL DATE 6-20-18
05-04-18	

GRADE CROSSING INNOVATION WY (WEST) INDEX OF PLANS, VICINITY MAP AND ABBREVIATIONS

PCA NO.	CONTRACT NO.	FILE LOCATION

SHEET 699 OF 736 — DRAWING NO. GC-A — REVISION A

kleong Jul 03, 2018 - 9:04am J:\Project14\WMH170673\04-CAD\Sheets\Grade Xing Innovation_Cover.dwg

GENERAL NOTES:

1. ALL WORK INDICATED SHALL BE ACCOMPLISHED USING NEW MATERIALS, UNLESS OTHERWISE NOTED.

2. OMISSIONS OR CONFLICTS BETWEEN VARIOUS ELEMENTS OF THE CONTRACT DOCUMENTS SHALL BE BROUGHT TO THE ATTENTION OF THE ENGINEER AND RESOLVED BEFORE PROCEEDING WITH THE WORK.

3. THE CONTRACTOR SHALL VERIFY ALL EXISTING INFORMATION AND SHALL REPORT ANY DISCREPANCIES TO THE ENGINEER BEFORE COMMENCING WORK.

4. ALL STREET IMPROVEMENTS SHALL BE CONSTRUCTED IN ACCORDANCE WITH THE CURRENT VTA FACILITIES STANDARDS. ALL WORK AND MATERIALS SPECIFIED AND SHOWN ON THE PLANS WITHIN VTA RIGHT-OF-WAY MUST CONFORM TO VTA'S MOST CURRENT STANDARDS AND SPECIFICATIONS. ALL PEDESTRIAN IMPROVEMENTS SHALL CONFORM WITH THE REQUIREMENTS OF TITLE 24 OF THE CALIFORNIA CODE OF REGULATIONS AND THE AMERICAN DISABILITIES ACT. THE IMPROVEMENTS ARE SUBJECT TO THE INSPECTION AND APPROVAL OF VTA ENGINEERING DIVISION.CONTACT VTA CONSTRUCTION INSPECTION AT LEAST 2 WORKING DAYS PRIOR TO THE START OF ANY WORK TO ARRANGE FOR INSPECTION.

5. ALL REVISIONS TO THIS PLAN MUST BE REVIEWED BY THE VTA REPRESENTATIVE PRIOR TO CONSTRUCTION AND SHALL BE ACCURATELY SHOWN ON REVISED PLANS STAMPED AND DISTRIBUTED BY THE VTA REPRESENTATIVE PRIOR TO ACCEPTANCE OF THE WORK AS COMPLETE.

6. THE CONTRACTOR SHALL NOTIFY UNDERGROUND SERVICE ALERT, (800) 642-2444, TWO (2) WORKING DAYS PRIOR TO ANY EXCAVATION. THE USA AUTHORIZATION NUMBER SHALL BE KEPT AT THE JOB SITE.

7. CONTRACTOR SHALL PROTECT EXISTING STRUCTURES, FACILITIES, SIGNAGES, FINISHES, UTILITIES, FIXTURES, DEVICES AND EQUIPMENTS NOT DESIGNATED FOR CONSTRUCTION. CONTRACTOR SHALL REPAIR AND/OR RESTORE TO PRE-CONSTRUCTION CONDITIONS ALL ELEMENTS DAMAGED OR IMPACTED BY THE CONSTRUCTION ACTIVITIES.

8. PRIOR TO PLACING CURB, SIDEWALK, ASPHALT CONCRETE, SUB-BASE, OR BASE MATERIAL, ALL UNDERGROUND UTILITIES WITHIN THE RIGHT-OF-WAY SHALL BE INSTALLED, BACKFILL COMPLETED, AND THE VTA CONSTRUCTION DIVISION NOTIFIED BY EACH OF THE UTILITY COMPANIES HAVING FACILITIES WITHIN THE WORK AREA THAT THE UTILITY INSTALLATION HAS SATISFACTORILY PASSED ACCEPTANCE TESTS.

9. WHEN WIDENING THE PAVEMENT ON AN EXISTING ROAD, THE EXISTING PAVEMENT SHALL BE CUT TO A NEAT LINE AND REMOVED TO AN EXISTING ADEQUATE STRUCTURAL SECTION, OR TO THE ORIGINAL ROAD SECTION. AN EXPLORATORY TRENCH, OR POTHOLING, MAY BE REQUIRED TO DETERMINE THE LIMITS OF PAVEMENT REMOVAL.

10. SHOULD IT APPEAR THAT THE WORK TO BE DONE, OR ANY MATTER RELATIVE THERETO, IS NOT SUFFICIENTLY DETAILED OR EXPLAINED ON THESE PLANS, THE CONTRACTOR SHALL CONTACT THE ENGINEER FOR SUCH FURTHER EXPLANATIONS AS MAY BE NECESSARY.

11. UNLESS OTHERWISE PERMITTED BY THE ENGINEER, UTILITIES, FACILITIES, SIGNAGES, FIXTURES, DEVICES, EQUIPMENT, EXITING AND PATH OF TRAVEL MUST REMAIN OPERATIONAL/FUNCTIONAL DURING REVENUE HOURS. ANY AND ALL PROPOSED MODIFICATIONS TO THE UTILITIES, SIGNAGES, FIXTURES, DEVICES, EXITS AND PATHS OF TRAVEL DURING CONSTRUCTION SHALL BE SUBMITTED IN THE WORK PLANS AND SUBJECT TO THE APPROVAL OF THE ENGINEER.

12. BEFORE COMMENCING WORK AT THE JOB SITE, THE CONTRACTOR SHALL SUBMIT WORK PLANS. FURTHERMORE, FOR WORK THAT MAY AFFECT THE VTA OPERATING SYSTEM, THE CONTRACTOR SHALL SUBMIT A SITE SPECIFIC WORK PLAN. ITEMS THAT ARE REQUIRED TO BE TEMPORARILY RELOCATED PRIOR TO CONSTRUCTION AND REINSTALLED AFTER CONSTRUCTION ARE NOT SHOWN IN THE CONTRACT DOCUMENTS. CONTRACTOR IS REQUIRED TO INCLUDE THESE ITEMS IN ITS CONSTRUCTION WORK PLANS AND SUBMIT TO VTA FOR APPROVAL PRIOR TO CONSTRUCTION.

13. PRIOR TO ANY FABRICATION OR INSTALLATION OF "NEW WORK", RELOCATION OF EXISTING STRUCTURES, SIGNAGES, FACILITIES, UTILITIES AND EQUIPMENT, THE CONTRACTOR SHALL PERFORM A COMPREHENSIVE SURVEY TO VERIFY EXISTING INFORMATION AT THE JOB SITE.

14. TEMPORARY SILT AND DRAINAGE CONTROL FACILITIES SHALL BE INSTALLED TO CONTROL AND CONTAIN EROSION- CAUSED SILT DEPOSITS AND TO PROVIDE FOR THE SAFE DISCHARGE OF STORM WATERS INTO EXISTING STORM WATER FACILITIES. DESIGN OF THESE FACILITIES MUST BE APPROVED BY VTA AND IN PLACE PRIOR TO THE START OF GRADING.

15. ALL TRAFFIC STRIPING AND MARKINGS SHALL BE THERMOPLASTIC UNLESS THE PLANS DESIGNATE THE USE OF "TRAFFIC PAINT".

16. ALL STRIPING ON MAJOR ROADS SHALL BE CAT-TRACKED PRIOR TO FINAL INSTALLATION. FINAL INSTALLATION OF STRIPING WILL BE ALLOWED ONLY AFTER APPROVAL OF THE STRIPING LAYOUT BY THE ENGINEER.

17. THE CONTRACTOR IS RESPONSIBLE FOR PRESERVATION AND/OR PERPETUATION OF ALL EXISTING MONUMENTS, WHICH CONTROL SUBDIVISIONS, TRACTS, STREETS, OR HIGHWAYS, OR PROVIDE SURVEY CONTROL, WHICH WILL BE DISTURBED OR REMOVED DUE TO CONTRACTORS' WORK. THE CONTRACTOR SHALL PROVIDE A MINIMUM OF TEN (10) WORKING DAYS NOTICE TO PROJECT ENGINEER/SURVEY OR PRIOR TO DISTURBANCE OR REMOVAL OF EXISTING MONUMENTS. PROJECT ENGINEER/SURVEYOR SHALL COORDINATE WITH THE CONTRACTOR TO RESET MONUMENTS OR PROVIDE PERMANENT WITNESS MONUMENTS AND FILE THE REQUIRED DOCUMENTATION WITH THE COUNTY SURVEYOR PER BUSINESS AND PROFESSIONS CODE SECTION 8771.

18. THE CONTRACTOR SHALL BE RESPONSIBLE FOR MAINTAINING THE SECURITY OF THE JOB SITE. WHERE EXISTING SECURITY BARRIERS, INCLUDING RAILINGS, GRILLES, FENCES, GATES OR WALLS ARE REMOVED OR BECOME INOPERATIVE DUE TO CONTRACTOR'S OPERATIONS, TEMPORARY PROVISIONS SIMILAR/EQUIVALENT TO THE EXISTING SECURITY PROVISIONS SHALL BE MADE, AS APPROVED BY THE ENGINEER.

19. OBSTRUCTIONS INDICATED ARE FOR INFORMATION ONLY. IT IS THE CONTRACTOR'S RESPONSIBILITY TO VERIFY THE LOCATION AND DEPTH OF ALL OBSTRUCTIONS WITH THE APPROPRIATE AGENCY. NEITHER THE OWNER NOR THE ENGINEER ASSUMES RESPONSIBILITY THAT THE OBSTRUCTIONS INDICATED WILL BE THE OBSTRUCTIONS ENCOUNTERED. CONTRACTOR SHALL NOTIFY UNDERGROUND SERVICE ALERT (800) 227-2600 TWO (2) WORKING DAYS PRIOR TO ANY EXCAVATION.

20. CONTRACTOR SHALL PROVIDE ALL LIGHTS, SIGNS, BARRICADES, FLAGMEN AND OTHER DEVICES NECESSARY TO PROVIDE FOR PUBLIC SAFETY. SHOULD THE CONTRACTOR FAIL TO PROVIDE THE NECESSARY SAFETY DEVICES, AND THEY ARE PROVIDED BY VTA THE CONTRACTOR SHALL PAY VTA TIME AND MATERIAL COSTS FOR PROVIDING.

21. IF ARCHAEOLOGICAL MATERIALS ARE UNCOVERED DURING GRADING, TRENCHING, OR OTHER EXCAVATION; EARTHWORK WITHIN 100 FEET OF THESE MATERIALS SHALL BE STOPPED UNTIL A PROFESSIONAL ARCHAEOLOGIST WHO IS CERTIFIED BY THE SOCIETY OF CALIFORNIA ARCHAEOLOGY (SCA) AND/OR THE SOCIETY OF PROFESSIONAL ARCHAEOLOGY (SOPA) HAS HAD AN OPPORTUNITY TO EVALUATE THE SIGNIFICANCE OF THE FIND AND SUGGEST APPROPRIATE MITIGATION MEASURES, IF THEY ARE DEEMED NECESSARY.

22. CONTRACTOR SHALL PROVIDE FOR INGRESS AND EGRESS TO PRIVATE PROPERTY ADJACENT TO WORK THROUGHOUT THE PERIOD OF CONSTRUCTION.

23. CONTRACTOR SHALL PROVIDE AND MAINTAIN ADEQUATE SANITARY FACILITIES (PUBLIC AND ADA COMPLIANT) AT THE SITE DURING ALL PHASES OF CONSTRUCTION.

24. NO WORK SHALL BE PERFORMED WITHOUT INSPECTION BY VTA. IF ANY WORK THAT REQUIRES INSPECTION MUST BE PERFORMED OUTSIDE OF NORMAL WORKING HOURS, CONTRACTOR SHALL SUBMIT A WRITTEN REQUEST FOR INSPECTION SERVICES TO THE VTA REPRESENTATIVE 2 WORKING DAYS IN ADVANCE OF THE TIME SUCH SERVICES WILL BE REQUIRED.

25. CONTRACTOR SHALL VERIFY ALL CONTROLLING FIELD DIMENSIONS AND CONDITIONS BEFORE ORDERING AND FABRICATING ALL MATERIALS.

26. CONTRACTOR SHALL COORDINATE THESE DRAWINGS, DRAWINGS FROM OTHER DISCIPLINES, AND VTA STANDARDS AND PREPARE SHOP DRAWINGS FOR ALL CONCRETE WORK. THIS INCLUDES JOINT LOCATIONS AND TYPES, REINFORCING BAR LAYOUT AND FABRICATION DETAILS AND ALL OTHER MISCELLANEOUS FABRICATION DETAILS. CONTRACTOR SHALL SUBMIT THESE SHOP DRAWINGS TO THE ENGINEER FOR REVIEW AND APPROVAL BEFORE PURCHASE OR FABRICATION.

27. PRIOR TO PERFORMING WORK WITHIN 10 FEET OF VTA'S RIGHT-OF-WAY, CONTRACTOR SHALL OBTAIN VTA PERMITS, INCLUDING RESTRICTED ACCESS PERMIT (RAP) AND CONSTRUCTION ACCESS PERMIT (CAP) AS REQUIRED. CONTRACTOR TO COMPLY WITH RAP AND CAP REQUIREMENTS, INCLUDING FEES, RAINING, AND BACKGROUND SECURITY CHECKS.

NO.	DATE	REVISIONS
A	05-04-18	100% SUBMITTAL

REGISTERED PROFESSIONAL ENGINEER — JORGE E. SANCHEZ PEREZ — No. C 86790 EXP 03-31-19 — CIVIL — STATE OF CALIFORNIA

SUBMITTED
RSE, INC.
1075 Old County Road
Belmont, CA 94002
www.rserail.com

DESIGNED	CHECKED
J. SANCHEZ	P. LEONG
DRAWN	CAD FILE NAME
C. CHEUK	

Santa Clara Valley Transportation Authority
Solutions that move you

APPROVED
WMH Corporation, Inc.
50 West San Fernando Street, Suite 950
San Jose, CA 95113-2412
Tel (408) 971-7300
Fax (408) 971-7400

CAD FILE DATE	SCALE
05-04-18	NONE
SUBMITTAL DATE	APPROVAL DATE 6-20-18
05-04-18	

GRADE CROSSING INNOVATION WY (WEST)
CIVIL
GENERAL NOTES

SHEET 700 OF 736
DRAWING NO. GC-1
REVISION A

PCA NO.	CONTRACT NO.	FILE LOCATION

Jul 03, 2018 - 9:07am J:\Project14\WMH170673\04-CAD\Sheets\Grade Xing Innovation_Notes.dwg
kleong

LEGEND:

- PCC SIDEWALK
- GREEN PAINT
- 4" HMA

CURVE DATA					
◯	RADIUS	Δ	TANGENT	LENGTH	DESCRIPTION
1	34.03'	60°10'22"	19.72'	35.74'	CENTERLINE

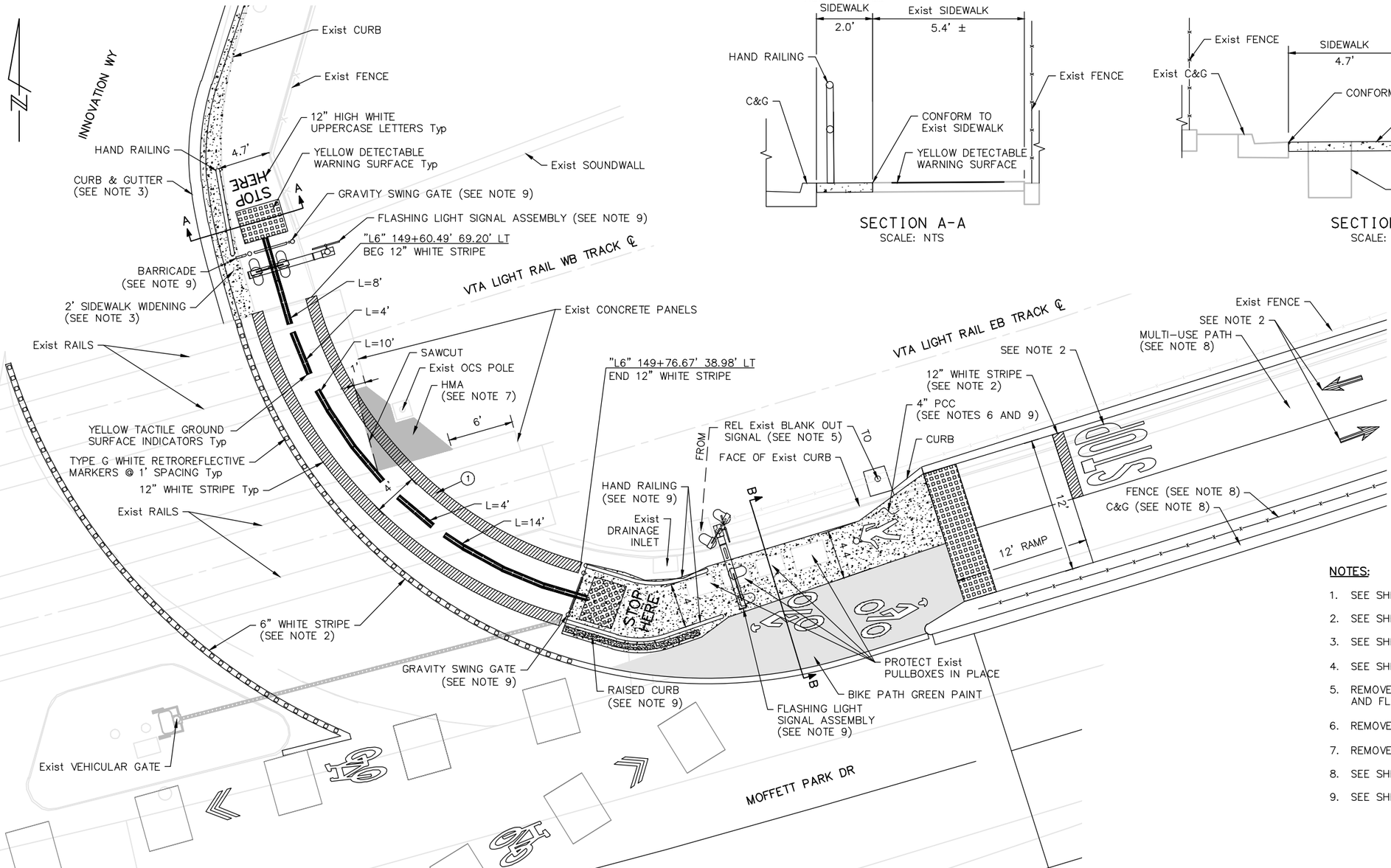

SECTION A-A
SCALE: NTS

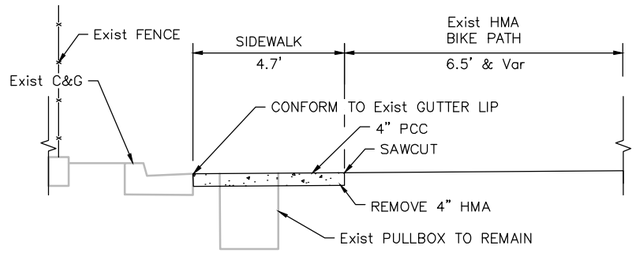

SECTION B-B
SCALE: NTS

NOTES:

1. SEE SHEET C-8 FOR REMOVAL PLAN.
2. SEE SHEET PD-8 FOR PAVEMENT DELINEATION PLAN.
3. SEE SHEET L-8 FOR SIDEWALK WIDENING.
4. SEE SHEET L-8 FOR CONTROL LINE "L6" DEFINITION.
5. REMOVE PART OF THE FENCE FOR BLANK OUT SIGNAL RELOCATION AND FLASHING LIGHT SIGNAL ASSEMBLY INSTALLATION.
6. REMOVE 4" Exist AC AND INSTALL 4" CONCRETE PAVEMENT.
7. REMOVE 4" Exist HMA AND INSTALL 4" HMA.
8. SEE SHEET C-24 FOR MULTI-USE TRAIL CONSTRUCTION DETAILS.
9. SEE SHEET GC-3 FOR LAYOUT DETAILS.

NO.	DATE	REVISIONS
A	05-04-18	100% SUBMITTAL

REGISTERED PROFESSIONAL ENGINEER — JORGE E. SANCHEZ — No. C 86790 EXP 03-31-19 — CIVIL — STATE OF CALIFORNIA

SUBMITTED
RSE, INC.
1075 Old County Road
Belmont, CA 94002
www.rserail.com

DESIGNED	CHECKED
J. SANCHEZ	P. LEONG
DRAWN	CAD FILE NAME
C. CHEUK	

Santa Clara Valley Transportation Authority
Solutions that move you

APPROVED
WMH Corporation, Inc.
50 West San Fernando Street, Suite 950
San Jose, CA 95113-2412
Tel (408) 971-7300
Fax (408) 971-7400

CAD FILE DATE	SCALE
05-04-18	1" = 5'
SUBMITTAL DATE	APPROVAL DATE 6-20-18
05-04-18	

GRADE CROSSING INNOVATION WY (WEST)
CIVIL
LAYOUT

SHEET	OF
701	736

DRAWING NO. GC-2
REVISION A

PCA NO.	CONTRACT NO.	FILE LOCATION

kleong Jul 03, 2018 - 9:11am J:\Project114\WMH170673\04-CAD\Sheets\Grade Xing Innovation_Plan.dwg

NOTES:

1. SEE SHEET C-8 FOR REMOVAL PLAN.
2. SEE SHEET PD-8 FOR PAVEMENT DELINEATION PLAN.
3. SEE SHEET L-8 FOR SIDEWALK WIDENING.
4. SEE SHEET L-8 FOR CONTROL LINE "L6" DEFINITION.
5. SEE SHEET GC-2 FOR LEGEND.
6. PROVIDE 4:1 CURB RAMP AT BOTH ENDS.

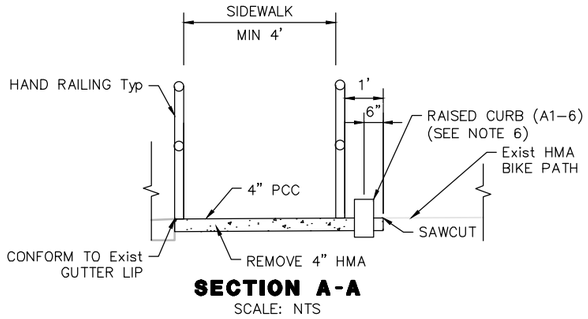

SECTION A-A

SCALE: NTS

CURVE DATA					
◯	RADIUS	Δ	TANGENT	LENGTH	DESCRIPTION
1	7.50'	35°32'07"	2.40'	4.65'	CENTERLINE
2	7.50'	35°43'55"	2.42'	4.68'	CENTERLINE
3	0.50'	164°35'37"	3.70'	1.44'	CENTERLINE

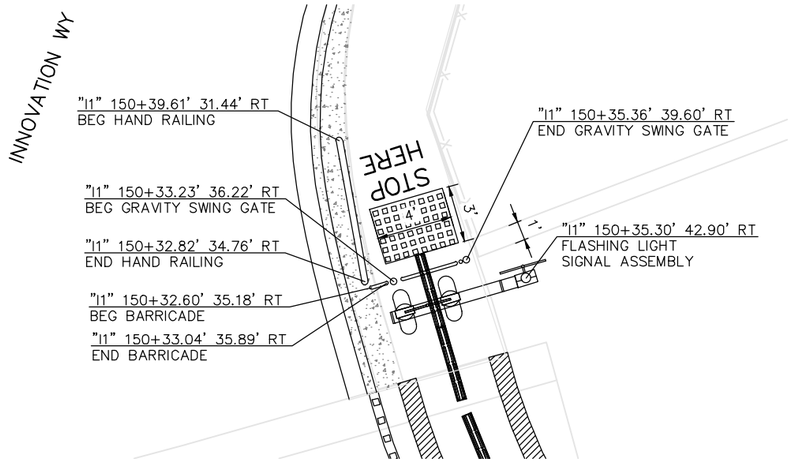

GATE AT INNOVATION WY

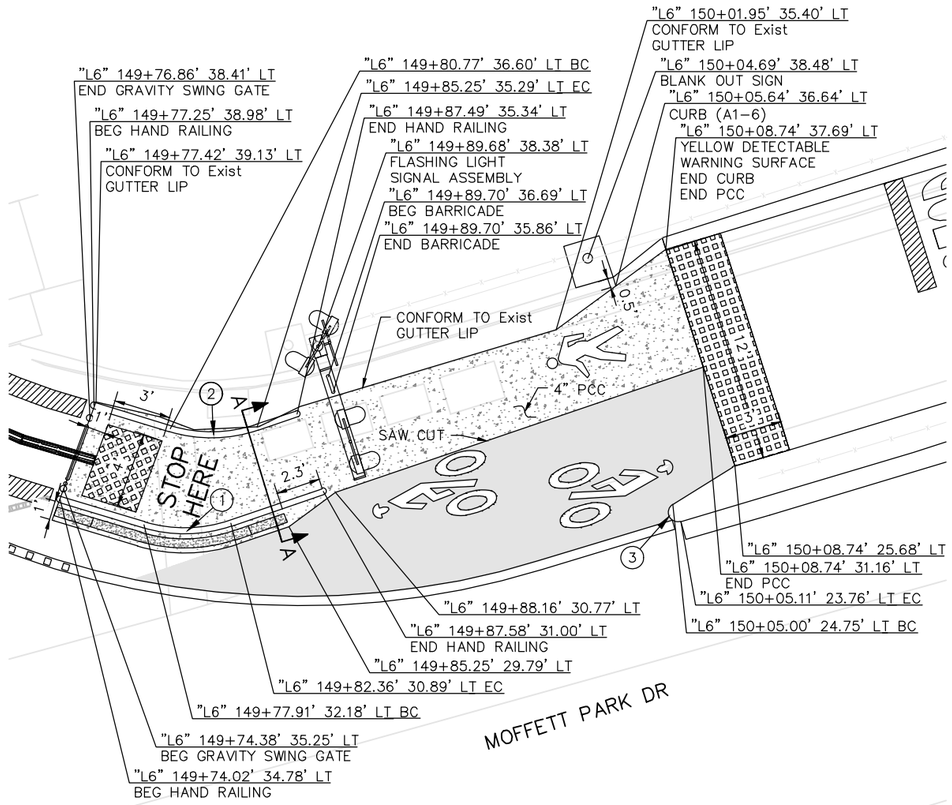

GATE AT MOFFET PARK DR

NO.	DATE	REVISIONS
A	05-04-18	100% SUBMITTAL

REGISTERED PROFESSIONAL ENGINEER — JORGE J. SANCHEZ — No. C 86790 EXP 03-31-19 — CIVIL — STATE OF CALIFORNIA

SUBMITTED: RSE, INC. — 1075 Old County Road, Belmont, CA 94002, www.rserail.com

DESIGNED	CHECKED
J. SANCHEZ	P. LEONG
DRAWN	CAD FILE NAME
C. CHEUK	

Santa Clara Valley Transportation Authority — Solutions that move you

APPROVED: WMH Corporation, Inc. — 50 West San Fernando Street, Suite 950, San Jose, CA 95113-2412 — Tel (408) 971-7300, Fax (408) 971-7400

CAD FILE DATE	SCALE
05-04-18	1" = 4'
SUBMITTAL DATE	APPROVAL DATE 6-20-18
05-04-18	

GRADE CROSSING INNOVATION WY (WEST)
CIVIL
CIVIL CONSTRUCTION DETAILS

SHEET 702 OF 736 — DRAWING NO. GC-3 — REVISION A

PCA NO. | CONTRACT NO. | FILE LOCATION

kleong Jul 03, 2018 - 9:14am J:\Project14\WMH170673\04-CAD\Sheets\Grade Xing Innovation_Details.dwg

NOTE:

1. SHOP DRAWINGS WILL BE PROVIDED BY THE CONTRACTOR PRIOR TO ORDERING THE SIGNAL ASSEMBLY.

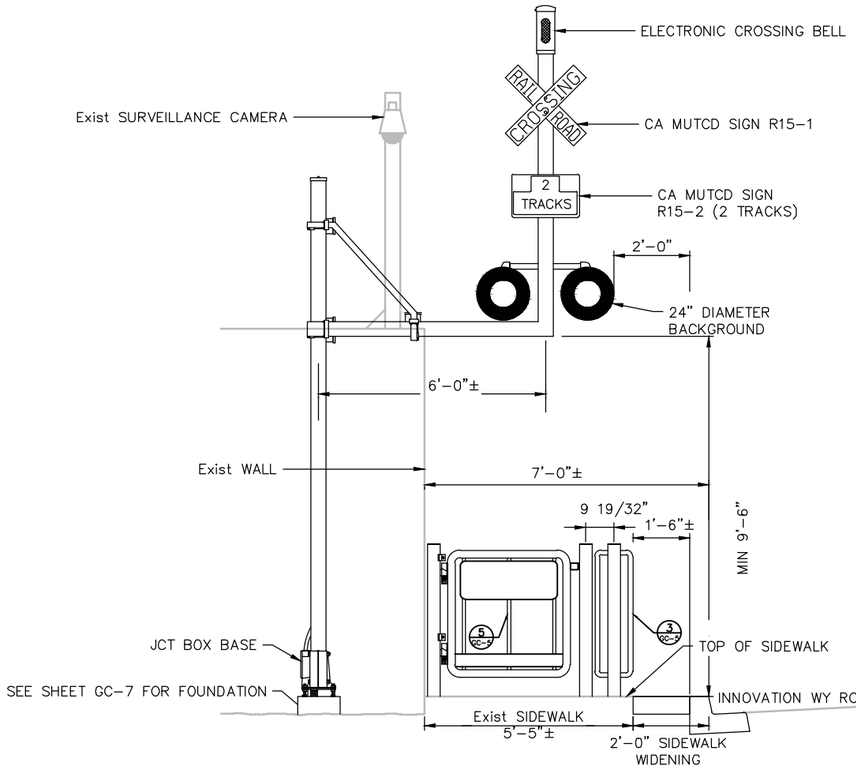

FLASHING LIGHT SIGNAL ASSEMBLY AND GRAVITY SWING GATE WITH BARRICADE AT INNOVATION WAY

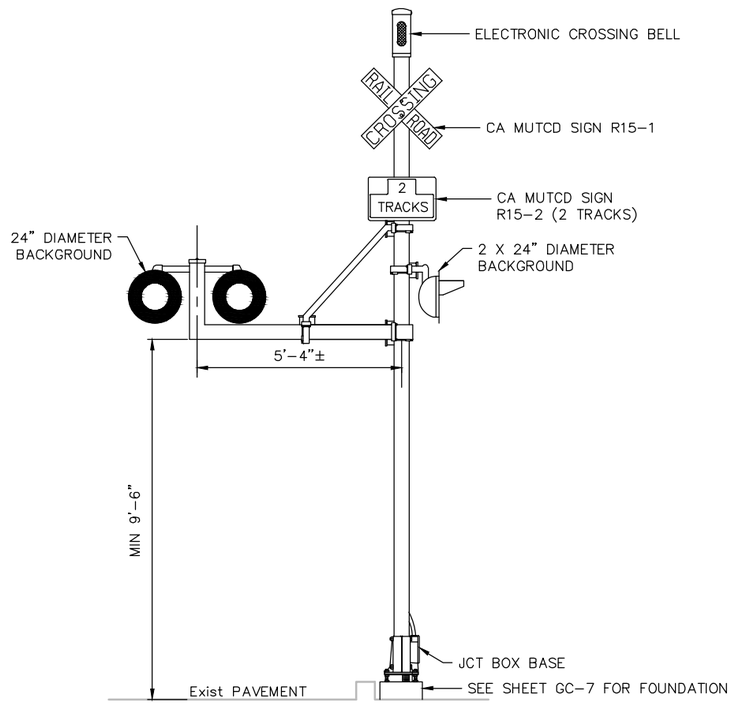

FLASHING LIGHT SIGNAL ASSEMBLY AT MOFFETT PARK DR

NO.	DATE	REVISIONS
A	05-04-18	100% SUBMITTAL

REGISTERED PROFESSIONAL ENGINEER — JORGE E. SANCHEZ — No. C 86790 EXP 03-31-19 — CIVIL — STATE OF CALIFORNIA

SUBMITTED: RSE, INC. — 1075 Old County Road, Belmont, CA 94002 — www.rserail.com

DESIGNED	CHECKED
J. SANCHEZ	P. LEONG
DRAWN	CAD FILE NAME
C. CHEUK	

Santa Clara Valley Transportation Authority — Solutions that move you

APPROVED: WMH Corporation, Inc. — 50 West San Fernando Street, Suite 950, San Jose, CA 95113-2412 — Tel (408) 971-7300 — Fax (408) 971-7400

CAD FILE DATE	SCALE
05-04-18	NTS
SUBMITTAL DATE	APPROVAL DATE 6-20-18
05-04-18	

GRADE CROSSING INNOVATION WY (WEST)
CIVIL
CIVIL CONSTRUCTION DETAILS

SHEET 703 OF 736 — DRAWING NO. GC-4 — REVISION A

PCA NO. | CONTRACT NO. | FILE LOCATION

Jul 03, 2018 - 9:16am J:\Project14\WMH170673\04-CAD\Sheets\Grade Xing Innovation_Gates.dwg kleong

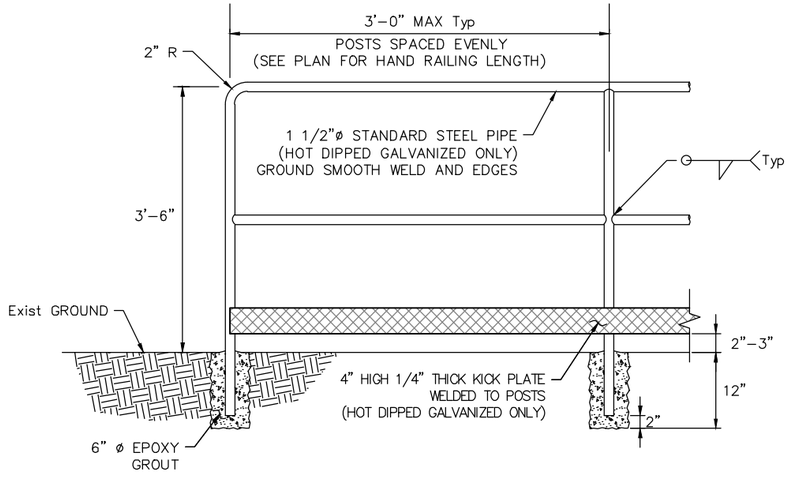

HAND RAILING WITH KICK PLATE

1 — DETAIL

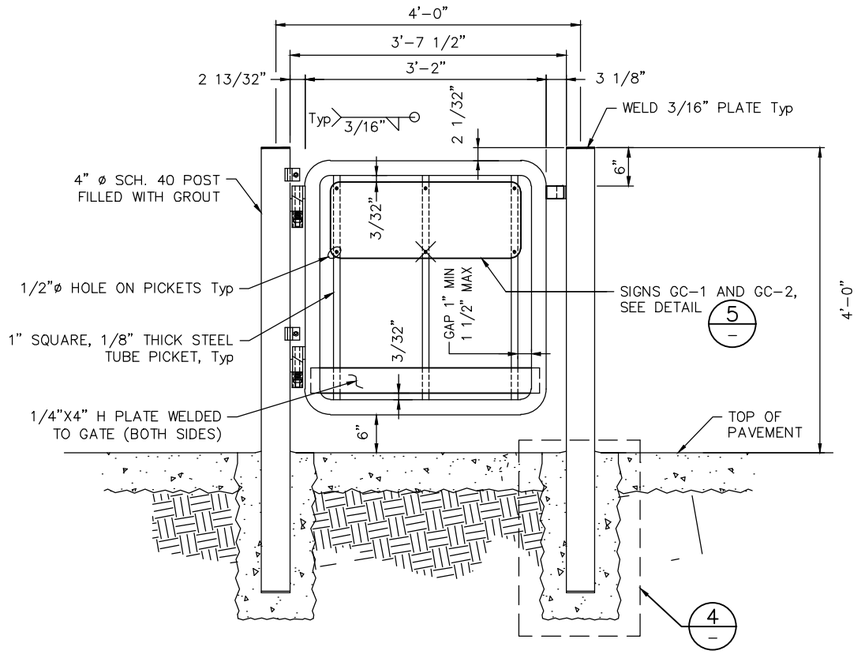

GRAVITY SWING GATE

2 — DETAIL

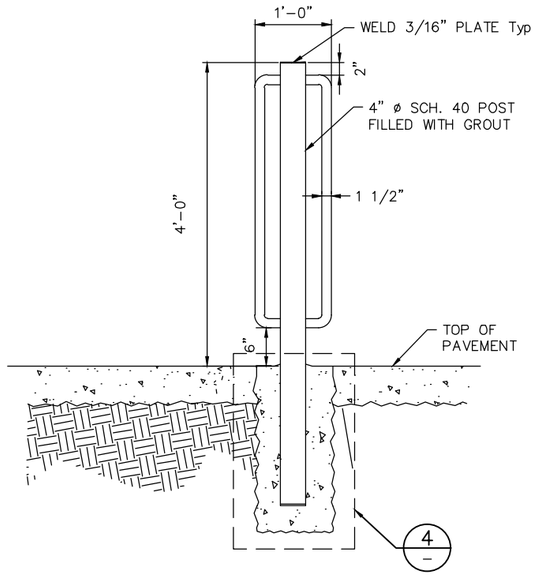

BARRICADE

3 — DETAIL

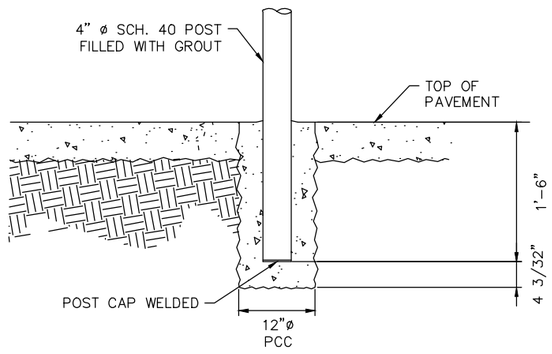

GRAVITY SWING GATE AND BARRICADE POST ANCHORAGE

4 — DETAIL

NO.	DATE	REVISIONS
A	05-04-18	100% SUBMITTAL

REGISTERED PROFESSIONAL ENGINEER — JORGE V. SANCHEZ — No. C 86790 EXP 03-31-19 — CIVIL — STATE OF CALIFORNIA

SUBMITTED: RSE, INC. — 1075 Old County Road, Belmont, CA 94002, www.rsearl.com

DESIGNED: J. SANCHEZ | CHECKED: P. LEONG | DRAWN: C. CHEUK | CAD FILE NAME:

Santa Clara Valley Transportation Authority — Solutions that move you

APPROVED: WMH Corporation, Inc. — 50 West San Fernando Street, Suite 950, San Jose, CA 95113-2412 — Tel (408) 971-7300, Fax (408) 971-7400

CAD FILE DATE: 05-04-18 | SCALE: NTS | SUBMITTAL DATE: 05-04-18 | APPROVAL DATE 6-20-18

GRADE CROSSING INNOVATION WY (WEST)
CIVIL
CIVIL CONSTRUCTION DETAILS

SHEET 704 OF 736 | DRAWING NO. GC-5 | REVISION A

PCA NO. | CONTRACT NO. | FILE LOCATION

Jul 03, 2018 - 9:19am J:\Project14\WMH170673\04-CAD\Sheets\Grade Xing Innovation_Misc.dwg
kleong

NOTE:

1. SIGN PANELS: 0.120" THICK REFLECTORIZED WHITE ALUMINUM.

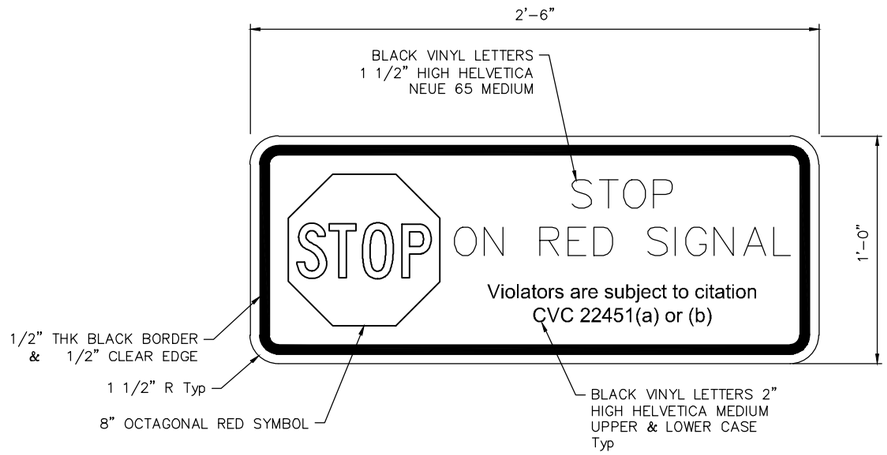

OTHER SIDE (GC-1)

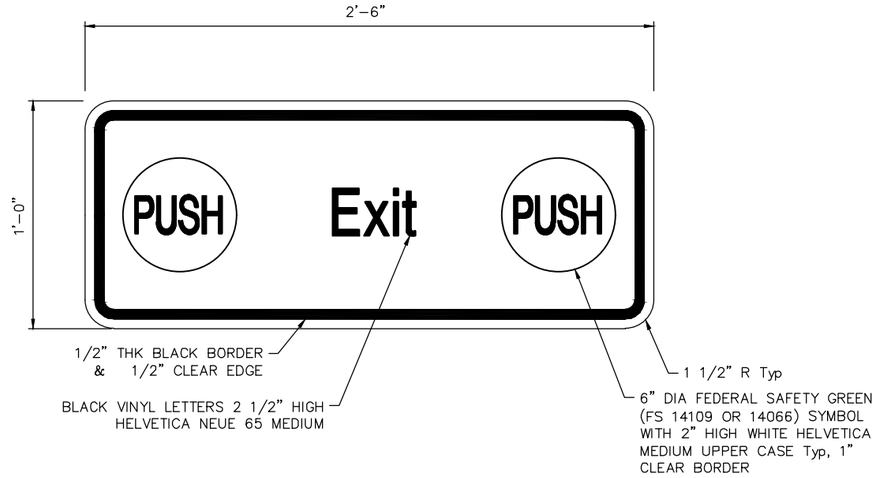

TRACK SIDE (GC-2)

GRAVITY SWING GATE SIGNAGE DETAILS

5 – DETAIL

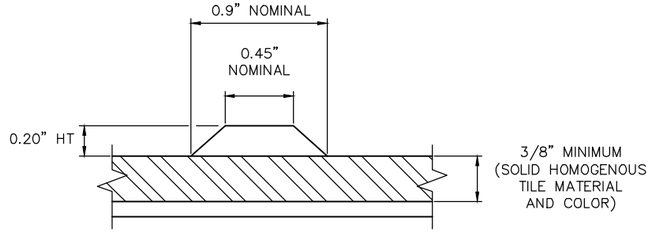

SECTION A-A

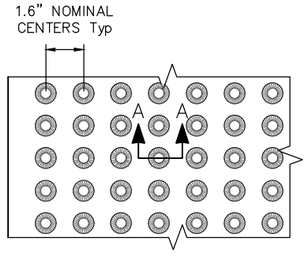

YELLOW DETECTABLE WARNING SURFACE
TRUNCATED DOME (IN-LINE)

6 – DETAIL

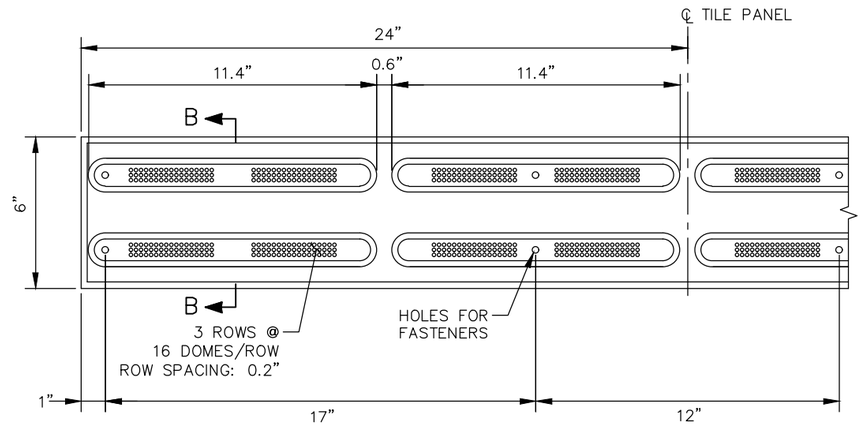

YELLOW TACTILE GROUND SURFACE INDICATORS

7 – DETAIL

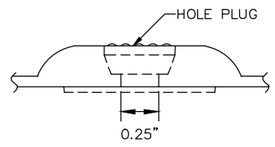

FASTENER DETAIL

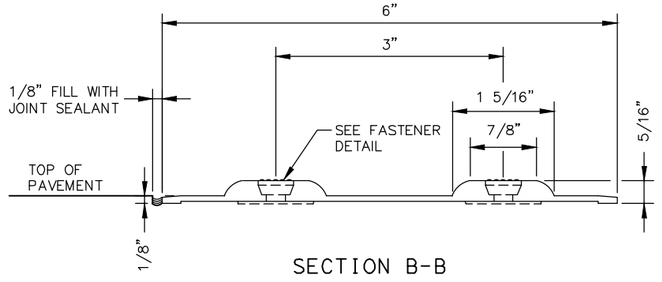

SECTION B-B

NO.	DATE	REVISIONS
A	05-04-18	100% SUBMITTAL

REGISTERED PROFESSIONAL ENGINEER — JORGE J. SANCHEZ PEREZ — No. C 86790 EXP 03-31-19 — CIVIL — STATE OF CALIFORNIA

SUBMITTED: RSE, INC. — 1075 Old County Road, Belmont, CA 94002, www.rseRail.com

DESIGNED	CHECKED
J. SANCHEZ	P. LEONG
DRAWN	CAD FILE NAME
C. CHEUK	

Santa Clara Valley Transportation Authority — Solutions that move you

APPROVED: WMH Corporation, Inc. — 50 West San Fernando Street, Suite 950, San Jose, CA 95113-2412 — Tel (408) 971-7300, Fax (408) 971-7400

CAD FILE DATE	SCALE
05-04-18	NTS
SUBMITTAL DATE	APPROVAL DATE 6-20-18
05-04-18	

GRADE CROSSING INNOVATION WY (WEST)
CIVIL
CIVIL CONSTRUCTION DETAILS

PCA NO.	CONTRACT NO.	FILE LOCATION

SHEET 705 OF 736 — DRAWING NO. GC-6 — REVISION A

kleong Jul 03, 2018 – 9:23am J:\Project14\WMH170673\04-CAD\Sheets\Grade Xing Innovation_Misc.dwg

NOTES:

1. PROVIDE TWO HEX NUTS AND TWO FLAT WASHERS FOR EACH ANCHOR BOLT. INSTALL ABOVE AND BELOW BASE FOR LEVELING DURING INSTALLATION.ANCHOR BOLTS AND NUTS SHALL CONFORM TO ASTM A307 GRADE A, AND FLAT WASHERS TO ASTM F436M. EXPOSED STEEL SHALL BE GALVANIZED OR CADMIUM PLATED.
2. CONCRETE SHALL DEVELOP A MINIMUM COMPRESSIVE STRENGTH OF 30 MPa (4351 PSI) AT 28 DAYS.
3. REINFORCING BARS SHALL CONFORM TO ASTM A615/A615M GRADE 400, TIES SHALL BE GRADE 300.
4. SPIRAL SHALL BE CONTINUOUS FROM TOP TO BOTTOM, AND PITCH INCREASED FOR CONDUIT CLEARANCE ONLY IF REQUIRED.
5. CLEARANCES, INCLUDING CLEARANCES TO TRACKS AND UNCURBED STREETS, SHALL CONFORM TO CALIFORNIA PUBLIC UTILITY COMMISSION GENERAL ORDER NO. 75-C.
6. TOP OF POURED FOUNDATION SHALL BE AT SAME ELEVATION AS CROWN OF ROAD OR TOP OF CURB, WHICHEVER IS HIGHER.
7. FOUNDATION DEPTH AND DESIGN SHALL BE COMPLETED AND VERIFIED BY THE CONTRACTOR.
8. ANCHOR BOLTS ABOVE TOP OF FOUNDATION SHALL BE PROTECTED FROM DAMAGE AND RESIDUAL CONCRETE DURING FOUNDATION INSTALLATION.
9. CONDUIT RISER SHALL BE 75 (3") DIA MIN. SCHEDULE 80, PVC CONDUIT. CONDUIT END CAP SHALL BE FLUSH WITH TOP OF COMPLETED FOUNDATION, AND LOCATED AS SHOWN.
10. ANCHOR BOLTS SHALL BE CONSTRAINED (BY USE OF A FORM) TO PROPER POSITION DURING CONCRETE PLACEMENT.

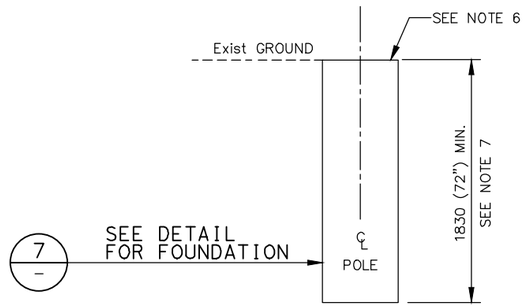

CROSSING FLASHERS
GENERAL ARRANGEMENT

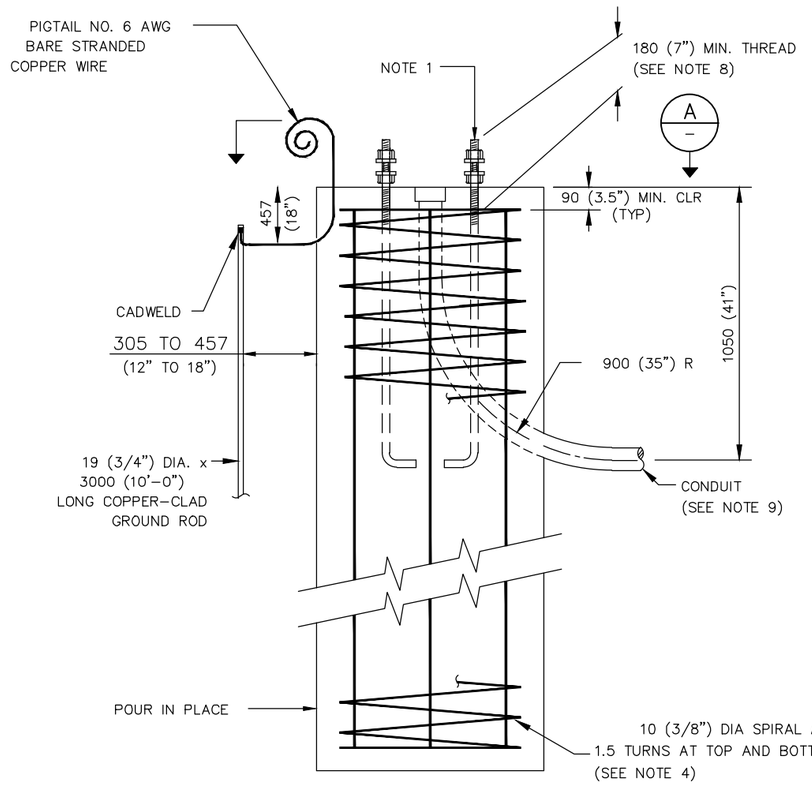

FOUNDATIOIN
7 – DETAIL

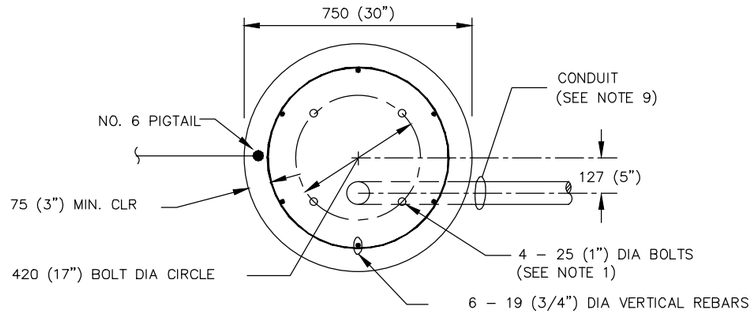

A – SECTION

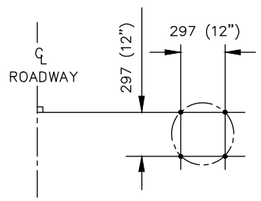

BOLT PATTERN
(SEE NOTE 10)

NO.	DATE	REVISIONS
A	05-04-18	100% SUBMITTAL

REGISTERED PROFESSIONAL ENGINEER – JORGE C. SANCHEZ – No. C 86790 EXP 03-31-19 – CIVIL – STATE OF CALIFORNIA

SUBMITTED: RSE, INC. 1075 Old County Road Belmont, CA 94002 www.rserail.com

DESIGNED	CHECKED
J. SANCHEZ	P. LEONG
DRAWN	CAD FILE NAME
C. CHEUK	

Santa Clara Valley Transportation Authority
Solutions that move you

APPROVED: WMH Corporation, Inc.
50 West San Fernando Street, Suite 950, San Jose, CA 95113-2412
Tel (408) 971-7300 Fax (408) 971-7400

CAD FILE DATE	SCALE
05-04-18	NTS
SUBMITTAL DATE	APPROVAL DATE 6-20-18
05-04-18	

GRADE CROSSING INNOVATION WY (WEST)
CIVIL
CIVIL CONSTRUCTION DETAILS

SHEET 706 OF 736
DRAWING NO. GC-7
REVISION A

PCA NO. | CONTRACT NO. | FILE LOCATION

kleong Jul 03, 2018 – 12:20pm J:\Project14\WMH170673\04-CAD\Sheets\Grade Xing Innovation_Foundation.dwg

SHEET	TITLE	DESCRIPTION
A	PLAN INDEX	INDEX OF SIGNAL DRAWINGS
1	CROSSING LAYOUT	DOUBLE LINE; EQUIPMENT LOCATIONS; APPROACH STARTS
2	TRACK PLAN	DOUBLE LINE TRACK AND CABLE PLAN WITH DETAILS
3	"A" TRACK LOGIC	DIRECTIONAL STICK LOGIC; AS CONTROL – "A" TRACK
4	"B" TRACK LOGIC	DIRECTIONAL STICK LOGIC; AS CONTROL – "B" TRACK
5	CONTROL LOGIC	RELAY CONTROL, OVERLAP CIRCUITS
6	TRACK CIRCUITS (XING)	AFO TRACK CIRCUITS FOR CROSSING SYSTEM, "A" TRACK
7	TRACK CIRCUITS (XING)	AFO TRACK CIRCUITS FOR CROSSING SYSTEM, "B" TRACK
8	B12 BATTERY CHARGER	HF–MAX CHARGER WIRING AND PROGRAMMING DETAILS
9	CROSSING CONTROLLER	SSCCIIIA PLUS CROSSING CONTROLLER WIRING AND PROGRAMMING DETAILS
9X	CROSSING CONTROLLER (OUT)	CROSSING CONTROLLER REMOVED
10	LIGHTING SURGE PANEL #1	SURGE PANEL AND CIRCUITS FOR GATES AND LIGHTS
10X	LIGHTING SURGE PANEL #1 (OUT)	CROSSING LIGHTING SURGE PANEL #1 REMOVED
11	LIGHTING SURGE PANEL #2	SURGE PANEL AND CIRCUITS FOR GATES AND LIGHTS
11X	LIGHTING SURGE PANEL #2 (OUT)	CROSSING LIGHTING SURGE PANEL #2 REMOVED
12	GATE MECHANISM "A"	"A" GATE CIRCUITRY
13	GATE MECHANISM "B"	"B" GATE CIRCUITRY
14	GATE MECHANISM "C"	"C" GATE CIRCUITRY
15	LIGHT ASSEMBLY "D"	LIGHT ASSEMBLY "D" CIRCUITRY
16	LIGHT ASSEMBLY "E"	LIGHT ASSEMBLY "E" CIRCUITRY
17	LIGHT ASSEMBLY "F"	LIGHT ASSEMBLY "F" CIRCUITRY
18	LINE CIRCUITS	SIGNAL LINE CIRCUITS
19	RECORDER CIRCUITS AND TRAFFIC	CROSSING RECORDER CIRCUITS & TRAFFIC SIGNAL INTERFACE
20	EVENT RECORDER	INPUTS TO RECORDER
21	RELAY CONTACT ASSIGNMENTS & ENERGY LOOPS	RELAYS & ENERGY LOOPS FOR ROW "J" & "H" DETAIL
22	ENERGY DISTRIBUTION CASE "B"	AC AND DC POWER CIRCUITS
23	EQUIPMENT LAYOUT CASE "B"	EQUIPMENT LAYOUT FOR CASE "B"
24	TERMINAL BOARD "B"	TERMINAL BOARD/CABLE ASSIGNMENTS FOR "B" CASE
25	EQUIPMENT LAYOUT CASE "A"	EQUIPMENT LAYOUT FOR CASE "A"
26	TERMINAL BOARD "A"	TERMINAL BOARD/CABLE ASSIGNMENT FOR "A" CASE
27	JUNCTION BOX DETAIL (I)	SIGNAL JUNCTION BOX LAYOUTS AND DETAILS
28	JUNCTION BOX DETAIL (II)	SIGNAL & TRACK JUNCTION BOX LAYOUTS AND DETAILS
29	CASES GROUNDING	TYPICAL CASES GROUNDING

NO.	DATE	REVISIONS
OP2	05-04-18	100% SUBMITTAL
OP1	06-29-07	REVISED FOR INNOVATION WAY NAME
OP0	10-24-00	AS-BUILT - ISSUED FOR RECORD DRAWINGS

REGISTERED PROFESSIONAL ENGINEER
ALVIN PHUOCHIO HO
No. E 21083
EXP 03-31-19
ELECTRICAL
STATE OF CALIFORNIA

SUBMITTED
SOUTH BAY SIGNAL, LLC
911 LAKEVILLE STREET, #354
PETALUMA, CA 94952
WWW.SOUTHBAYSIGNAL.COM
RSE, INC.
1075 OLD COUNTY ROAD
BELMONT, CA 94002
WWW.RSEINAL.COM

DESIGNED T. RYAN
CHECKED Q. HO
DRAWN T. RYAN
CAD FILE NAME XC212A

Santa Clara Valley Transportation Authority
Solutions that move you

APPROVED
WMH Corporation, Inc.
50 West San Fernando Street, Suite 950
San Jose, CA 95113-2412
Tel (408) 971-7300
Fax (408) 971-7400

CAD FILE DATE 05-04-18
SCALE NONE
SUBMITTAL DATE 05-04-18
APPROVAL DATE 6-20-18

GRADE CROSSING INNOVATION WY (WEST)
SIGNAL
PLAN INDEX

SHEET 707 OF 736
DRAWING NO. XC212A
REVISION 2

PCA NO.
CONTRACT NO.
FILE LOCATION

kwong Jul 03, 2018 – 11:45am J:\Project14\WMH170673\04-CAD\Signal\XC212A.dwg

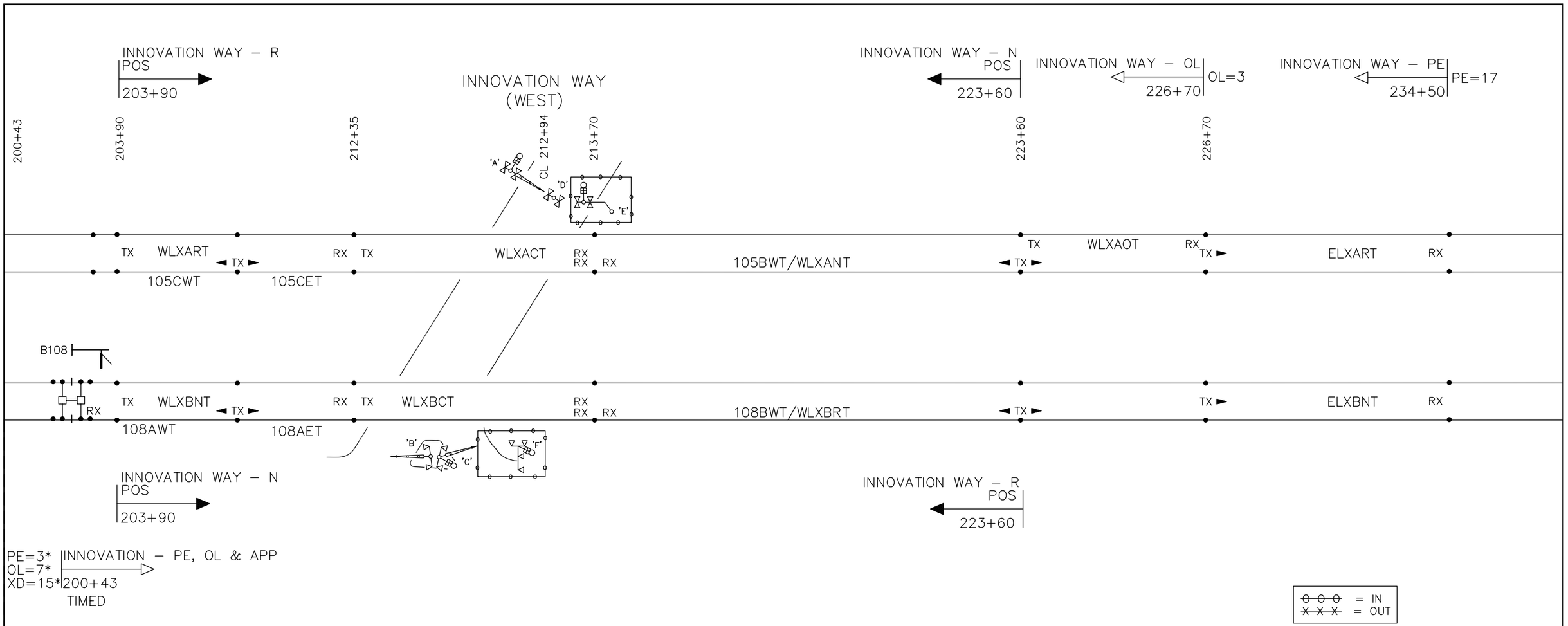

NOTE (*): PE, OL AND APPROACH ARE TIMED AT THE START OF SD AT SIGNAL B108/MOFFETT EAST PED (SH200)

TIMER SETTINGS @ XINGS:
XD = XING DELAY
OL = OVERLAP DELAY
PE = PRE–EMPT DELAY
SD = SIGNAL CLEARING DELAY

NO.	DATE	REVISIONS
OP4	05-04-18	100% SUBMITTAL
OP3	06-29-07	REVISED FOR INNOVATION WAY NAME
OP2	08-31-04	CORRECTED XING STARTS AND DELAYS
OP1	11-05-01	AS INSTALLED PER MOFFETT PARK CHANGES
OP0	10-24-00	AS-BUILT - ISSUED FOR RECORD DRAWINGS

REGISTERED PROFESSIONAL ENGINEER
PHUONG PHUOC HO
No. E 21083
EXP 03-31-19
ELECTRICAL
STATE OF CALIFORNIA

SUBMITTED
SOUTH BAY SIGNAL, LLC
911 LAKEVILLE STREET, #354
PETALUMA, CA 94952
WWW.SOUTHBAYSIGNAL.COM

RSE, INC.
1075 OLD COUNTY ROAD
BELMONT, CA 94002
WWW.RSEINAL.COM

DESIGNED	CHECKED
T. RYAN	Q. HO
DRAWN	CAD FILE NAME
T. RYAN	XC21201

Santa Clara Valley Transportation Authority
Solutions that move you

APPROVED
WMH Corporation, Inc.
50 West San Fernando Street, Suite 950
San Jose, CA 95113-2412
Tel (408) 971-7300
Fax (408) 971-7400

CAD FILE DATE	SCALE
05-04-18	NONE
SUBMITTAL DATE	APPROVAL DATE 6-20-18
05-04-18	

GRADE CROSSING INNOVATION WY (WEST) SIGNAL CROSSING LAYOUT

SHEET	OF
708	736

DRAWING NO. XC21201
REVISION 4

PCA NO.	CONTRACT NO.	FILE LOCATION

Jul 03, 2018 – 11:46am J:\Project14\WMH170673\04-CAD\Signal\XC21201.dwg
kwong

INNOVATION WAY (WEST)

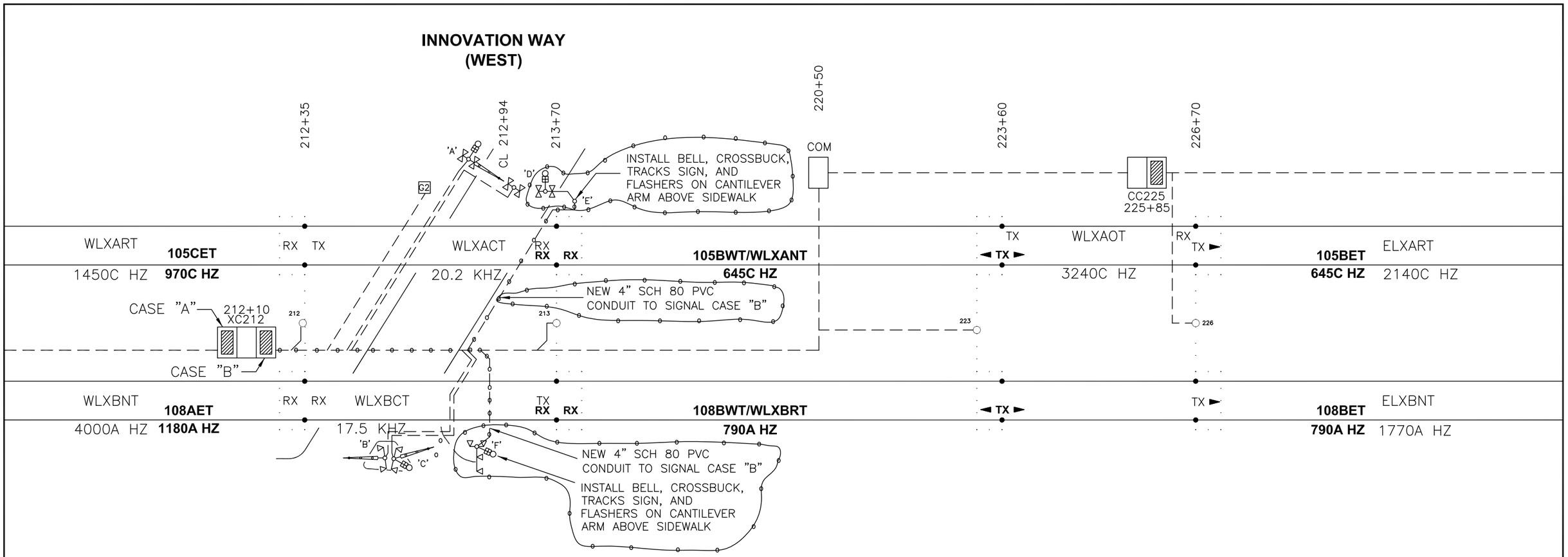

= IN
= OUT

XC212

- 2–5C#6,7C#14 — XING ASSY 'A'
- 2–5C#6,7C#14 — XING ASSY 'B'
- 2–5C#6,7C#14 — XING ASSY 'C'
- 5C#6 — XING ASSY 'D'
- 2–2C#6 — TRK CKT JB 212
- 2–2C#6 — TRK CKT JB 213
- 5C#14 — TRAFFIC SIG CTRLR
- 7C#6 — XING ASSY 'E'
- 7C#6 — XING ASSY 'F'

TO CC208: LRT SIG — 24C(8#8,16#14); SPARE — LRT SIG

CC225

TRK CKT JB 223 — 2–2C#6 — 2–2C#6 — TRK CKT JB 226

24C(8#8,16#14),12PR#19; SPARE

TO XC235: LRT SIG — 24C(8#8,16#14),12PR#19; SPARE — LRT SIG

NO.	DATE	REVISIONS
OP3	05-04-18	100% SUBMITTAL
OP2	06-29-07	REVISED FOR INNOVATION WAY NAME
OP1	07-03-04	REVISED WITH SPEED SIGNS AND RED DISKS
OP0	10-24-00	AS-BUILT - ISSUED FOR RECORD DRAWINGS

REGISTERED PROFESSIONAL ENGINEER — JOHN PHUOC TRAN — No. E 21083 — EXP 03-31-19 — ELECTRICAL — STATE OF CALIFORNIA

SUBMITTED
SOUTH BAY SIGNAL, LLC
911 LAKEVILLE STREET, #354
PETALUMA, CA 94952
WWW.SOUTHBAYSIGNAL.COM

RSE, INC.
1075 OLD COUNTY ROAD
BELMONT, CA 94002
WWW.RSEINC.COM

DESIGNED: T. RYAN
CHECKED: Q. HO
DRAWN: T. RYAN
CAD FILE NAME: XC21202

Santa Clara Valley Transportation Authority
Solutions that move you

APPROVED
WMH Corporation, Inc.
50 West San Fernando Street, Suite 950
San Jose, CA 95113-2412
Tel (408) 971-7300
Fax (408) 971-7400

CAD FILE DATE: 05-04-18
SCALE: NONE
SUBMITTAL DATE: 05-04-18
APPROVAL DATE 6-20-18

GRADE CROSSING INNOVATION WY (WEST) SIGNAL TRACK PLAN

SHEET 709 OF 736
DRAWING NO. XC21202
REVISION A

PCA NO. | CONTRACT NO. | FILE LOCATION

Jul 03, 2018 – 12:27pm J:\Project14\WMH170673\04-CAD\Signal\XC21202.dwg
ccheuk

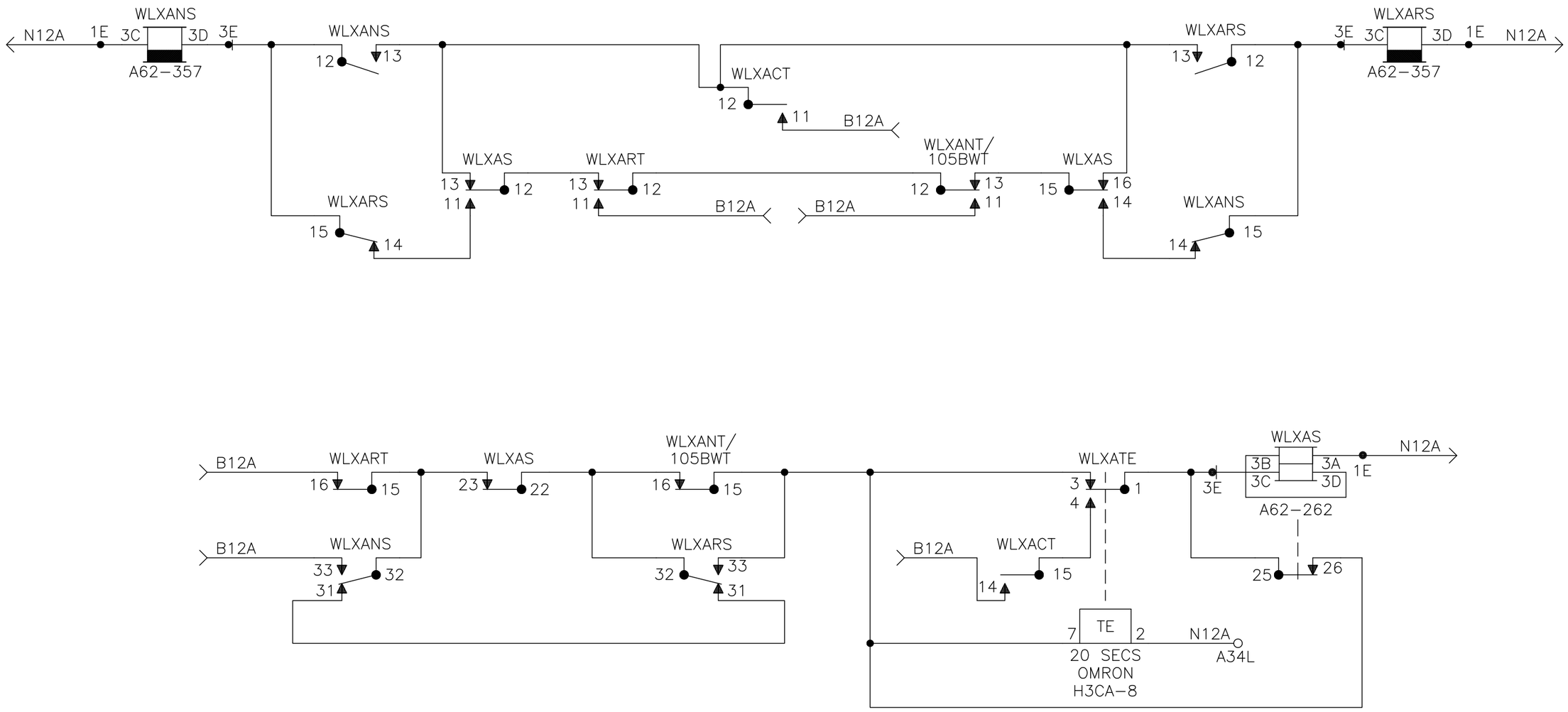

NOTE: WIRE TO BE NO. 16 UNLESS DENOTED OTHERWISE.

NO.	DATE	REVISIONS
OP1	06-29-07	REVISED FOR INNOVATION WAY NAME
OP0	10-24-00	AS BUILT - ISSUED FOR RECORD DRAWINGS

REGISTERED PROFESSIONAL ENGINEER
DUYNH PHUOCHUNG
No. E 21083
EXP. 03-31-19
ELECTRICAL
STATE OF CALIFORNIA

SUBMITTED
SOUTH BAY SIGNAL, LLC
911 LAKEVILLE STREET, #354
PETALUMA, CA 94952
WWW.SOUTHBAYSIGNAL.COM
RSE, INC.
1075 OLD COUNTY ROAD
BELMONT, CA 94002
WWW.RSEINC.COM

DESIGNED T. RYAN
CHECKED Q. HO
DRAWN T. RYAN
CAD FILE NAME XC21203

Santa Clara Valley Transportation Authority
Solutions that move you

APPROVED
WMH Corporation, Inc.
50 West San Fernando Street, Suite 950
San Jose, CA 95113-2412
Tel (408) 971-7300
Fax (408) 971-7400

CAD FILE DATE 05-04-18
SCALE NONE
SUBMITTAL DATE 05-04-18
APPROVAL DATE 6-20-18

GRADE CROSSING INNOVATION WY (WEST)
SIGNAL
"A" TRACK LOGIC CASE "A"
DIRECTION AND AS

SHEET 710 OF 736
DRAWING NO. XC21203
REVISION 1
PCA NO.
CONTRACT NO.
FILE LOCATION

kwong Jul 03, 2018 - 11:53am J:\Project14\WMH170673\04-CAD\Signal\XC21203.dwg

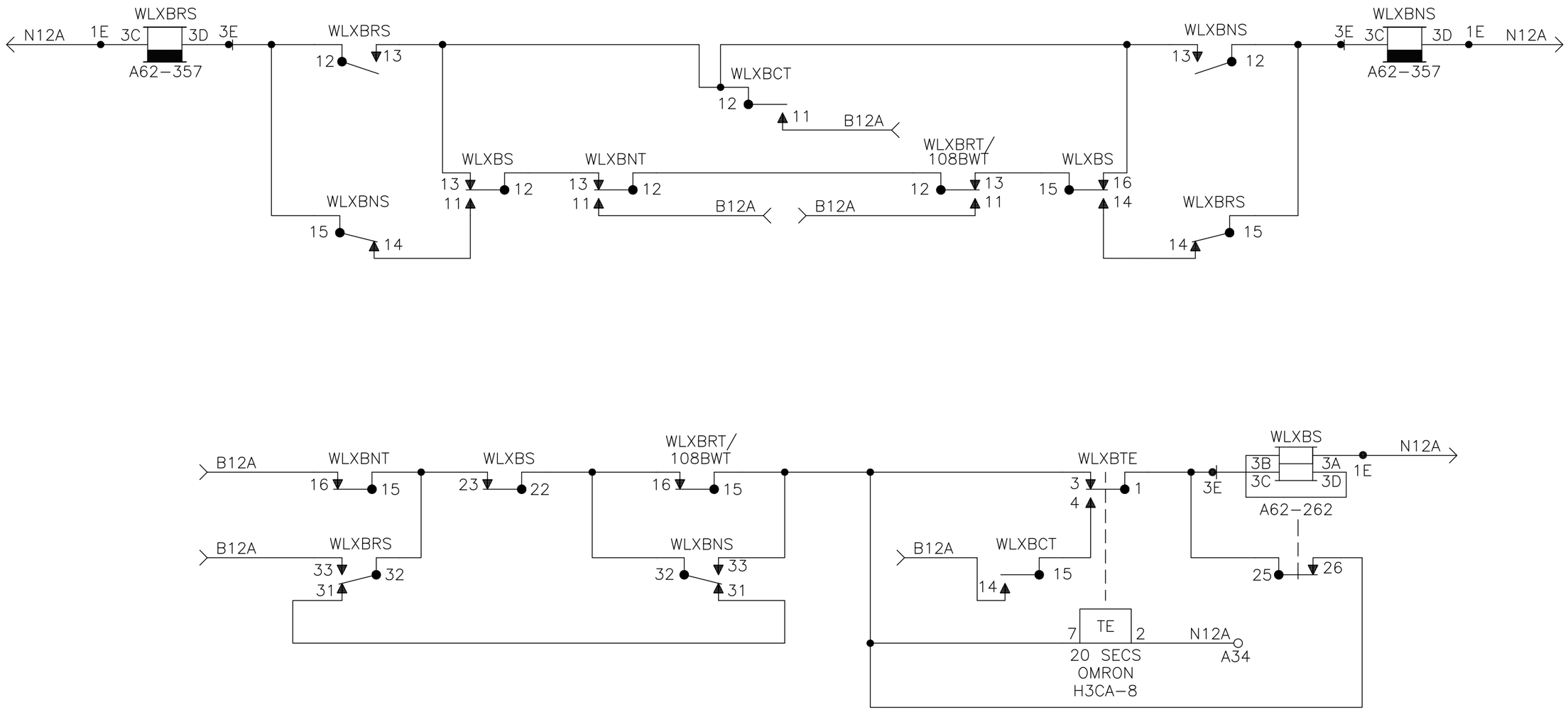

NOTE: WIRE TO BE NO. 16 UNLESS DENOTED OTHERWISE.

NO.	DATE	REVISIONS
OP1	06-29-07	REVISED FOR INNOVATION WAY NAME
OP0	10-24-00	AS-BUILT - ISSUED FOR RECORD DRAWINGS

REGISTERED PROFESSIONAL ENGINEER
DUYNH PHUOCHUNG
No. E 21083
EXP 03-31-19
ELECTRICAL
STATE OF CALIFORNIA

SUBMITTED
SOUTH BAY SIGNAL, LLC
911 LAKEVILLE STREET, #354
PETALUMA, CA 94952
WWW.SOUTHBAYSIGNAL.COM
RSE, INC.
1075 OLD COUNTY ROAD
BELMONT, CA 94002
WWW.RSERAIL.COM

DESIGNED T. RYAN
CHECKED Q. HO
DRAWN T. RYAN
CAD FILE NAME XC21204

Santa Clara Valley Transportation Authority
Solutions that move you

APPROVED
WMH Corporation, Inc.
50 West San Fernando Street, Suite 950
San Jose, CA 95113-2412
Tel (408) 971-7300
Fax (408) 971-7400

CAD FILE DATE 05-04-18
SCALE NONE
SUBMITTAL DATE 05-04-18
APPROVAL DATE 6-20-18

GRADE CROSSING INNOVATION WY (WEST)
SIGNAL
"B" TRACK LOGIC CASE "A"
DIRECTION AND AS

SHEET 711 OF 736
DRAWING NO. XC21204
REVISION 1
PCA NO.
CONTRACT NO.
FILE LOCATION

kwong Jul 03, 2018 - 11:54am J:\Project14\WMH170673\04-CAD\Signal\XC21204.dwg

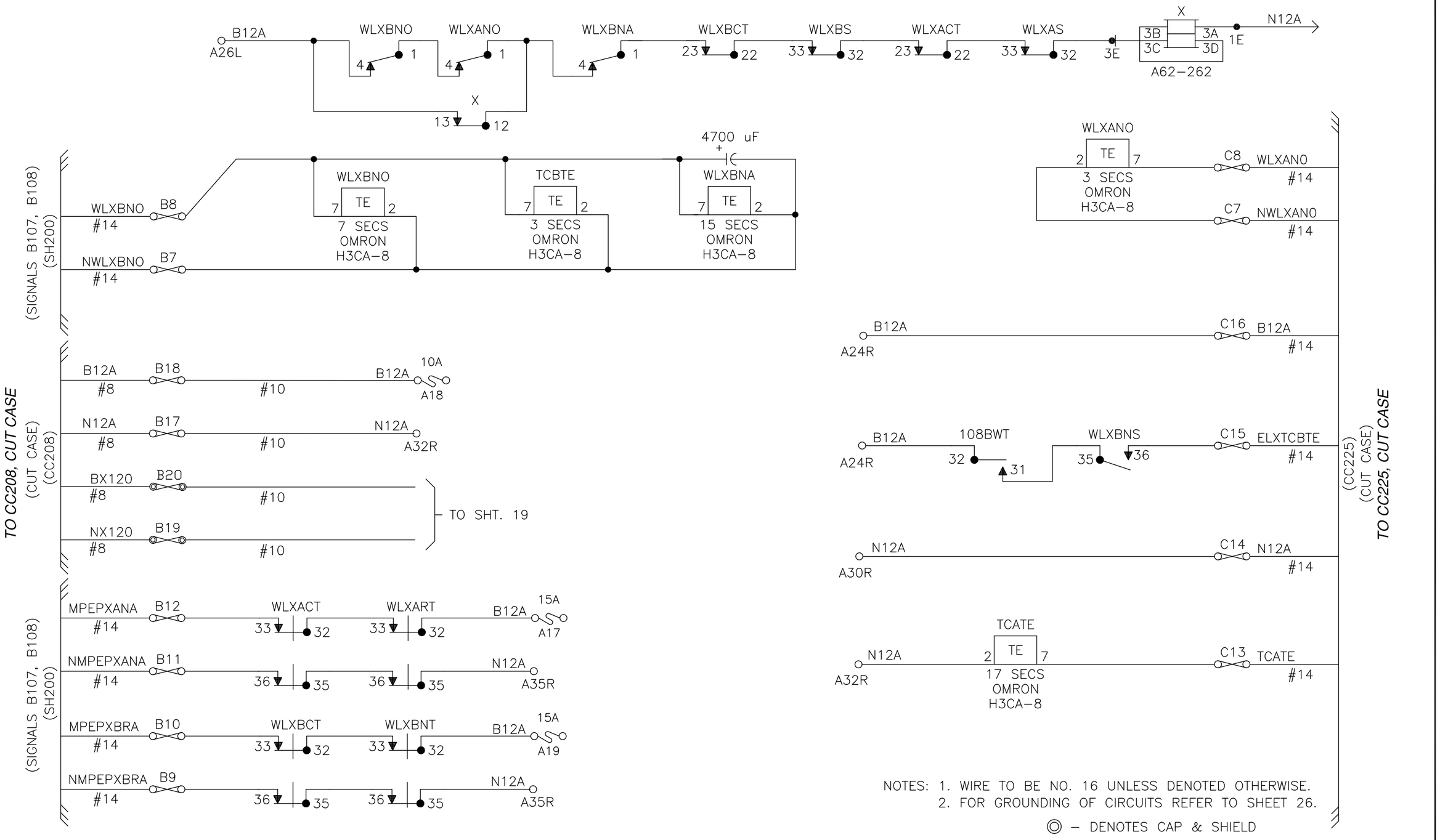

NOTES: 1. WIRE TO BE NO. 16 UNLESS DENOTED OTHERWISE.
2. FOR GROUNDING OF CIRCUITS REFER TO SHEET 26.

◎ – DENOTES CAP & SHIELD

NO.	DATE	REVISIONS
OP4	06-29-07	REVISED FOR INNOVATION WAY NAME
OP3	08-27-04	REVISED MPEPXANA AND MPEPXBRA CIRCUITS
OP2	07-03-04	REVISED FOR TRAFFIC PRE-EMPTION CIRCUITS
OP1	11-05-01	AS INSTALLED PER MOFFET PARK CHANGES
OP0	10-24-00	AS-BUILT - ISSUED FOR RECORD DRAWINGS

REGISTERED PROFESSIONAL ENGINEER — JOHNNY PHUOC HO — No. E 21083 — EXP 03-31-19 — ELECTRICAL — STATE OF CALIFORNIA

SUBMITTED
SOUTH BAY SIGNAL, LLC
911 LAKEVILLE STREET, #354
PETALUMA, CA 94952
WWW.SOUTHBAYSIGNAL.COM

RSE, INC.
1075 OLD COUNTY ROAD
BELMONT, CA 94002
WWW.RSEINC.COM

DESIGNED	CHECKED
T. RYAN	Q. HO
DRAWN	CAD FILE NAME
T. RYAN	XC21205

Santa Clara Valley Transportation Authority
Solutions that move you

APPROVED
WMH Corporation, Inc.
50 West San Fernando Street, Suite 950
San Jose, CA 95113-2412
Tel (408) 971-7300
Fax (408) 971-7400

CAD FILE DATE	SCALE
05-04-18	NONE
SUBMITTAL DATE	APPROVAL DATE 6-20-18
05-04-18	

GRADE CROSSING INNOVATION WY (WEST)
SIGNAL
CONTROL LOGIC
CASE "A"

PCA NO.	CONTRACT NO.	FILE LOCATION

SHEET 712 OF 736
DRAWING NO. XC21205
REVISION 4

Jul 03, 2018 – 11:56am J:\Project14\WMH170673\04-CAD\Signal\XC21205.dwg
kwong

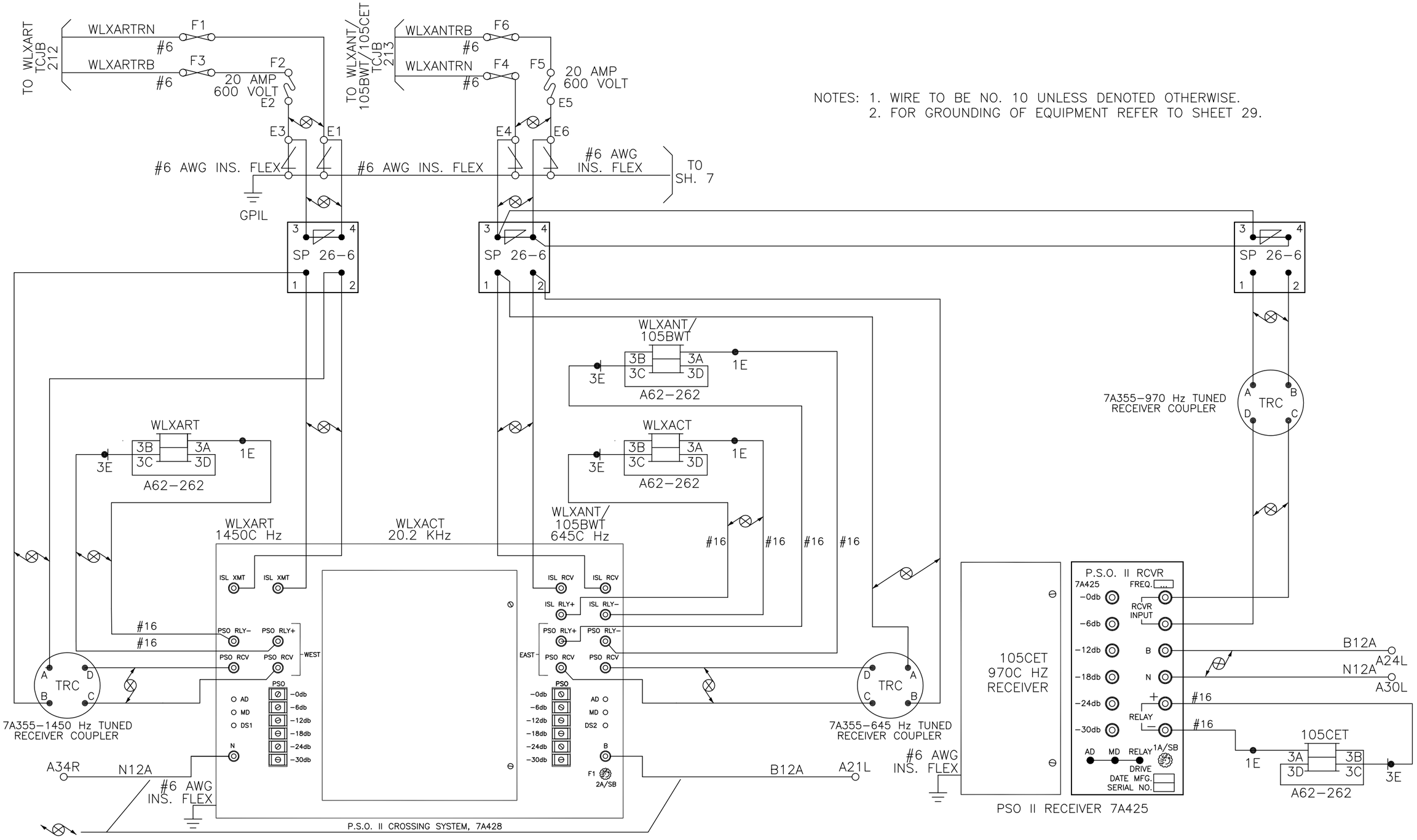

NOTES: 1. WIRE TO BE NO. 10 UNLESS DENOTED OTHERWISE.
2. FOR GROUNDING OF EQUIPMENT REFER TO SHEET 29.

NO.	DATE	REVISIONS
OP2	06-29-07	REVISED FOR INNOVATION WAY NAME
OP1	10-01-04	CORRECTED PSO PART NUMBERS
OP0	10-24-00	AS-BUILT - ISSUED FOR RECORD DRAWINGS

REGISTERED PROFESSIONAL ENGINEER — ANTHONY PHUOC HO — No. E 21083 EXP 03-31-19 — ELECTRICAL — STATE OF CALIFORNIA

SUBMITTED
SOUTH BAY SIGNAL, LLC
911 LAKEVILLE STREET, #354
PETALUMA, CA 94952
WWW.SOUTHBAYSIGNAL.COM

RSE, INC.
1075 OLD COUNTY ROAD
BELMONT, CA 94002
WWW.RSEMAIL.COM

DESIGNED	CHECKED
T. RYAN	Q. HO
DRAWN	CAD FILE NAME
T. RYAN	XC21206

Santa Clara Valley Transportation Authority
Solutions that move you

APPROVED
WMH Corporation, Inc.
50 West San Fernando Street, Suite 950
San Jose, CA 95113-2412
Tel (408) 971-7300
Fax (408) 971-7400

CAD FILE DATE	SCALE
05-04-18	NONE
SUBMITTAL DATE	APPROVAL DATE 6-20-18
05-04-18	

GRADE CROSSING INNOVATION WY (WEST) SIGNAL TRACK CIRCUITS (XING) CASE "A"

PCA NO.	CONTRACT NO.	FILE LOCATION

SHEET 713 OF 736
DRAWING NO. XC21206
REVISION 2

Jul 03, 2018 - 11:57am J:\Project14\WMH170673\04-CAD\Signal\XC21206.dwg
kwong

NOTES: 1. WIRE TO BE NO. 10 UNLESS DENOTED OTHERWISE.
2. FOR GROUNDING OF EQUIPMENT REFER TO SHEET 29.

TO WLXBNT TCJB 212
WLXBNTRN #6 F7
WLXBNTRB #6 F9
F8 20 AMP 600 VOLT E8
E9 E7
TO SH. 6
#6 AWG INS. FLEX

TO WLXBRT/108AET/108BWT TCJB 213
WLXBRTRB #6 F12
WLXBRTRN #6 F10
F11 20 AMP 600 VOLT E11
E10 E12
#6 AWG INS. FLEX
GP1R

SP 26-6

WLXBNT
3B 3A 3C 3D 3E 1E
A62-262

WLXBCT
3B 3A 3C 3D 3E 1E
A62-262

WLXBRT/108BWT
3B 3A 3C 3D 3E 1E
A62-262

WLXBNT 4000A Hz
WLXBCT 17.5 KHz
WLXBRT/108BWT 790A Hz

#16 #16 #16 #16 #16 #16

ISL XMT ISL XMT
ISL RCV ISL RCV
ISL RLY+ ISL RLY-
PSO RLY- PSO RLY+
PSO RCV PSO RCV
WEST
EAST
PSO
AD MD DS1 DS2 N B
-0db -6db -12db -18db -24db -30db
F1 2A/SB

7A355-4000 Hz TUNED RECEIVER COUPLER
7A355-790 Hz TUNED RECEIVER COUPLER
TRC A B C D

A33L N12A #6 AWG INS. FLEX
B12A A20L #6 AWG INS. FLEX

P.S.O. II CROSSING SYSTEM, 7A408

7A355-1180 Hz TUNED RECEIVER COUPLER

108AET 1180A HZ RECEIVER

PSO II RECEIVER 7A405
P.S.O. II RCVR 7A405
FREQ. ...
-0db -6db -12db -18db -24db -30db
RCVR INPUT
B N + - RELAY
AD MD RELAY 1A/SB DRIVE
DATE MFG.
SERIAL NO.

B12A A24L
N12A A29
#16 #16
1E
108AET
3A 3B 3D 3C 3E
A62-262

NO.	DATE	REVISIONS
OP2	06-29-07	REVISED FOR INNOVATION WAY NAME
OP1	10-01-04	CORRECTED PSO PART NUMBERS
OP0	10-24-00	AS-BUILT - ISSUED FOR RECORD DRAWINGS

REGISTERED PROFESSIONAL ENGINEER DUNG PHUOC HO No. E 21083 EXP. 03-31-19 ELECTRICAL STATE OF CALIFORNIA

SUBMITTED
SOUTH BAY SIGNAL, LLC
911 LAKEVILLE STREET, #354
PETALUMA, CA 94952
WWW.SOUTHBAYSIGNAL.COM

RSE, INC.
1075 OLD COUNTY ROAD
BELMONT, CA 94002
WWW.RSEINAL.COM

DESIGNED	CHECKED
T. RYAN	Q. HO
DRAWN	CAD FILE NAME
T. RYAN	XC21207

Santa Clara Valley Transportation Authority
Solutions that move you

APPROVED
WMH Corporation, Inc.
50 West San Fernando Street, Suite 950
San Jose, CA 95113-2412
Tel (408) 971-7300
Fax (408) 971-7400

CAD FILE DATE	SCALE
05-04-18	NONE
SUBMITTAL DATE	APPROVAL DATE 6-20-18
05-04-18	

GRADE CROSSING INNOVATION WY (WEST)
SIGNAL
TRACK CIRCUITS (XING)
CASE "A"

PCA NO.	CONTRACT NO.	FILE LOCATION

SHEET 714 OF 736
DRAWING NO. XC21207
REVISION 2

kwong Jul 03, 2018 - 11:58am J:\Project14\WMH170673\04-CAD\Signal\XC21207.dwg

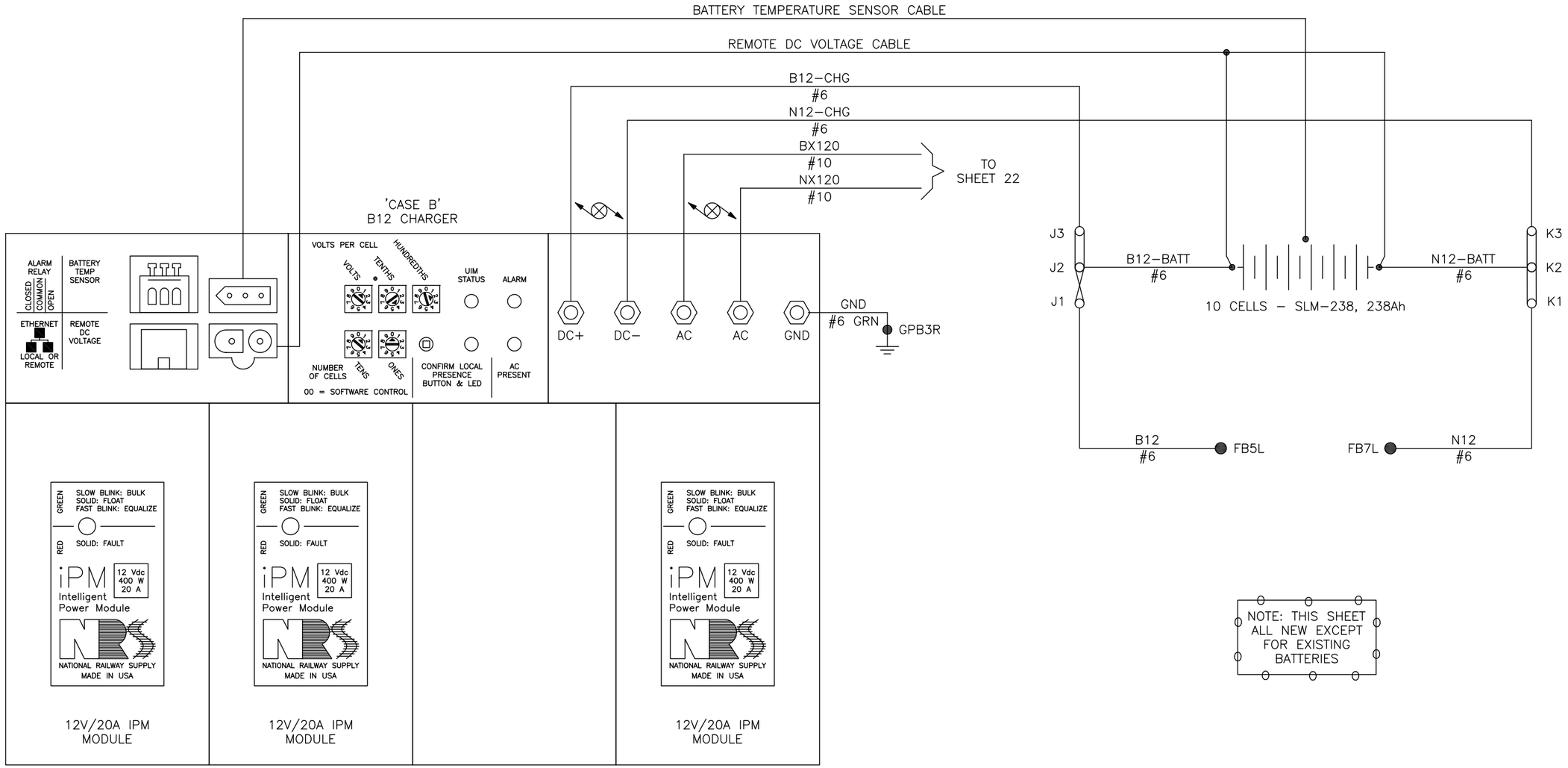

NATIONAL RAILWAY SUPPLY
HF–MAX 4–SLOT CHARGER

NOTE: THIS SHEET ALL NEW EXCEPT FOR EXISTING BATTERIES

SITE NAME	INNOVATION WAY WEST
NUMBER OF iPMs	3
NOMINAL DC OUTPUT VOLTAGE	12V
DC CABLE GAUGE	6 AWG
DC CABLE LENGTH	5 ft
REMOTE BATTERY TEMP.	ENABLED
REMOTE BATTERY VOLTAGE	ENABLED
TEMPERATURE UNITS	°F
START DELAY	0 m
OUTPUT CURRENT BALANCING	ENABLED
CONFIRM LOCAL PRESENCE	20 m

FLOAT VOLTAGE PER CELL	1.42 V
NUMBER OF CELLS	10 CELLS
MAX DC OUTPUT CURRENT	60.00 A
AUTOMATIC EQUALIZE	DISABLED
EQUALIZE INTERVAL	180 DAYS
EQUALIZE VOLTAGE PER CELL	1.47 V
EQUALIZE TIME	0 MIN.
TEMPERATURE COMP. (TC)	ENABLED
TC MIN TEMPERATURE ADJUST	32°F
TC MAX TEMPERATURE ADJUST	90°F
TC mV PER DEGREE PER CELL	3.0mV/CELL/°F

ALARM NAME	ALARM	TRIGGER LVL	DELAY	PRIORITY	MAN. CLEARING	RELAY
AC INPUT POWER LOST	ENABLED	---	0 m	MAJOR	DISABLED	K1
AC INPUT VOLTAGE HIGH	ENABLED	150 V	0 m	MAJOR	DISABLED	K1
BATTERY VOLTAGE LOW	ENABLED	1.25V/CELL	0 m	MAJOR	DISABLED	K1
BATTERY VOLTAGE HIGH	ENABLED	1.75V/CELL	0 m	MAJOR	DISABLED	K1
BATTERY TEMPERATURE LOW	ENABLED	0°F	0 m	MAJOR	DISABLED	K1
BATTERY TEMPERATURE HIGH	ENABLED	140°F	0 m	MAJOR	DISABLED	K1
MIN DC OUTPUT CURRENT	ENABLED	0.00 A	1 m	MAJOR	DISABLED	K1
iPM FAULT	ENABLED	---	0 m	MAJOR	DISABLED	K1
iPM COMMUNICATION LOST	ENABLED	---	0 m	MAJOR	DISABLED	K1
iPM INCORRECT DC VOLTAGE	ENABLED	---	0 m	MAJOR	DISABLED	K1
UIM FAULT	ENABLED	---	0 m	MAJOR	DISABLED	K1
BATTERY TEMP SENSOR FAULT	ENABLED	---	0 m	MAJOR	DISABLED	K1
REM DC VOLT SENSING FAULT	ENABLED	---	0 m	MAJOR	DISABLED	K1

X X X = OUT
O O O = IN

NO.	DATE	REVISIONS
OP0	05-04-18	100% SUBMITTAL

REGISTERED PROFESSIONAL ENGINEER
DUNG PHUOC TRAN
No. E 21083
EXP 03-31-19
ELECTRICAL
STATE OF CALIFORNIA

SUBMITTED
SOUTH BAY SIGNAL, LLC
911 LAKEVILLE STREET, #354
PETALUMA, CA 94952
www.SOUTHBAYSIGNAL.COM
RSE, INC.
1075 OLD COUNTY ROAD
BELMONT, CA 94002
WWW.RSEINC.COM

DESIGNED T. RYAN | CHECKED Q. HO
DRAWN T. RYAN | CAD FILE NAME XC21208

Santa Clara Valley Transportation Authority
Solutions that move you

APPROVED
WMH Corporation, Inc.
50 West San Fernando Street, Suite 950
San Jose, CA 95113-2412
Tel (408) 971-7300
Fax (408) 971-7400

CAD FILE DATE 05-04-18 | SCALE NONE
SUBMITTAL DATE 05-04-18 | APPROVAL DATE 6-20-18

GRADE CROSSING INNOVATION WY (WEST)
SIGNAL
B12 BATTERY CHARGER

SHEET 715 OF 736
DRAWING NO. XC21208
REVISION 0

PCA NO. | CONTRACT NO. | FILE LOCATION

kwong Jul 03, 2018 – 11:59am J:\Project14\WMH170673\04-CAD\Signal\XC21208.dwg

TO SHEET 10 LIGHTING & SURGE PANEL

1L2B #10
1L2A #10
1L1B #10
1L1A #10
1BELL #10
1GC #10
N12–1GC– #10

J1 (+ –): 1GC 1BELL 1L1 1L2 — OUTPUT A

J2: B N NON–VITAL I/O 1 (FLASH SYNC) OUT 2 (MAINT CALL)

B12 #10 → FB4L
N12 #10 → FB8L
B12 #10 → FB4L
N12 #10 → FB8L
B12 #10 → FB4R
N12 #10 → FB9L

NMCE #16

MCE

B12 #16 → FB4R

SSCC III PLUS

40 AMP CROSSING CONTROLLER

Isolated Gate

91190

invensys SAFETRAN Systems

Made In USA

MON 2008 FEB 18
19:30:49 HOURS

POWER CROSSING CONTROL INPUT STATUS 1 2 3 4 5 6 7 GP HEALTH RX TX LAN

NEXT
S1
PREVIOUS

ENTER
S2
EXIT

PROGRAM MENU	PROGRAMMED VALUE
MCF	BASIC
FLASH RATE	50
1GC DELAY	5
2GC DELAY (40A UNIT ONLY)	5
BELL–ON GATE RISING	YES
MINIMUM ACTIVATION TIME	0
ENABLED INPUTS	1 THRU 1
ENABLED OUTPUTS (40A UNIT ONLY)	A AND B
DAYLIGHT SAVINGS	ON
PASSWORD	DISABLED
CONFIGURE MENU	**PROGRAMMED VALUE**
LOS TIMERS (INPUTS 1 – 7)	0, 0, 0, 0, 0, 0, 0
ATCS ADDRESS	700000000000
LOW BATTERY	DISABLED
AUX I/O	NONVITAL OUTPUT
DETECT LAMP NEUTRAL WIRE	NO
TEST CONFIGURE MENU	**PROGRAMMED VALUE**
LAMP TEST CANCEL TIMER (MINUTES)	5
LAMP TEST DELAY TIMER (SECONDS)	30
LAMP TEST ON TIMER (SECONDS)	15
SETUP LAMP VOLTAGES MENU	**PROGRAMMED VALUE**
SETUP OUTPUT 1L1	10.0
SETUP OUTPUT 1L2	10.0
SETUP OUTPUT 2L1 (40A UNIT ONLY)	10.0
SETUP OUTPUT 2L2 (40A UNIT ONLY)	10.0

OUTPUT B: 2GC 2BELL 2L1 2L2

J6 | J5 DIAGNOSTICS | J4 LAN 1 2 | J3 CROSSING CONTROL INPUT 3 4 5 6 7 GP

#6 (GRN) → GPB1L

TO SHEET 11 LIGHTING & SURGE PANEL

2GC #10
N12–2GC– #10
2BELL #10
2L1A #10
2L1B #10
2L2A #10
2L2B #10

GP #16 → TO SHEET 10 LIGHTING & SURGE PANEL #1

FB9L

X #16 — 15 — X — 16 — B12A #16 → A32L

N12A #16 → A22L

X X X = OUT
O O O = IN

Jul 03, 2018 – 12:01pm J:\Project14\WMH170673\04-CAD\Signal\XC21209.dwg
kwong

NO.	DATE	REVISIONS
OP0	05-04-18	100% SUBMITTAL

REGISTERED PROFESSIONAL ENGINEER — JOHNNY PHUOC HO — No. E 21083 EXP 03-31-19 — ELECTRICAL — STATE OF CALIFORNIA

SUBMITTED
SOUTH BAY SIGNAL, LLC
911 LAKEVILLE STREET, #354
PETALUMA, CA 94952
WWW.SOUTHBAYSIGNAL.COM

RSE, INC.
1075 OLD COUNTY ROAD
BELMONT, CA 94002
WWW.RSEINC.COM

DESIGNED	CHECKED
T. RYAN	Q. HO
DRAWN	CAD FILE NAME
T. RYAN	XC21209

Santa Clara Valley Transportation Authority
Solutions that move you

APPROVED
WMH Corporation, Inc.
50 West San Fernando Street, Suite 950
San Jose, CA 95113-2412
Tel (408) 971-7300
Fax (408) 971-7400

CAD FILE DATE	SCALE
05-04-18	NONE
SUBMITTAL DATE	APPROVAL DATE 6-20-18
05-04-18	

GRADE CROSSING INNOVATION WY (WEST) SIGNAL CROSSING CONTROLLER CASE "B"

PCA NO.	CONTRACT NO.	FILE LOCATION

SHEET 716 OF 736
DRAWING NO. XC21209
REVISION 0

NOTES:
1. WIRES TO BE NO. 10 UNLESS DENOTED OTHERWISE.
2. BE SURE THESE JUMPERS ARE INSTALLED BEFORE CROSSING CONTROLLER IS PUT IN SERVICE.
3. MCE TO BE MOUNTED ON SIDE OF CASE "B" FACING ROAD.
4. FOR GROUNDING OF EQUIPMENT REFER TO SHEET 29.

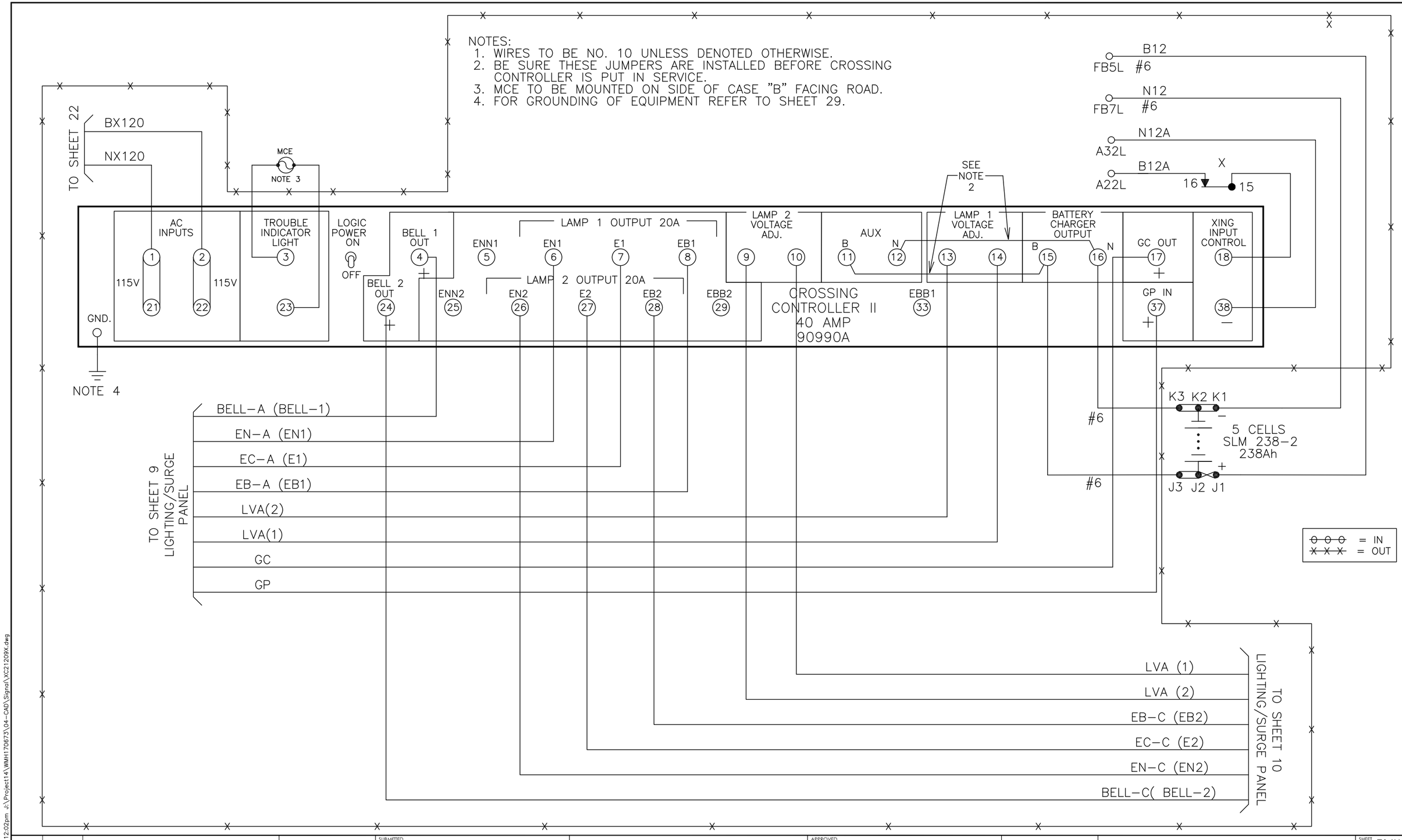

NO.	DATE	REVISIONS
OP2	05-04-18	100% SUBMITTAL
OP1	06-29-07	REVISED FOR INNOVATION WAY NAME
OP0	10-24-00	AS-BUILT - ISSUED FOR RECORD DRAWINGS

REGISTERED PROFESSIONAL ENGINEER — TIMOTHY PHUOC HO — No. E 21083 — EXP. 03-31-19 — ELECTRICAL — STATE OF CALIFORNIA

SUBMITTED
SOUTH BAY SIGNAL, LLC
911 LAKEVILLE STREET, #354
PETALUMA, CA 94952
WWW.SOUTHBAYSIGNAL.COM

RSE, INC.
1075 OLD COUNTY ROAD
BELMONT, CA 94002
WWW.RSEINC.COM

DESIGNED	CHECKED
T. RYAN	Q. HO
DRAWN	CAD FILE NAME
T. RYAN	XC21209X

Santa Clara Valley Transportation Authority
Solutions that move you

APPROVED
WMH Corporation, Inc.
50 West San Fernando Street, Suite 950
San Jose, CA 95113-2412
Tel (408) 971-7300
Fax (408) 971-7400

CAD FILE DATE	SCALE
05-04-18	NONE
SUBMITTAL DATE	APPROVAL DATE
05-04-18	6-20-18

GRADE CROSSING INNOVATION WY (WEST)
SIGNAL
CROSSING CONTROLLER (OUT)
CASE "B"

PCA NO.	CONTRACT NO.	FILE LOCATION

SHEET	OF
716X	736
DRAWING NO.	REVISION
XC21209X	2

Jul 03, 2018 - 12:02pm J:\Project14\WMH170673\04-CAD\Signal\XC21209X.dwg
kwong

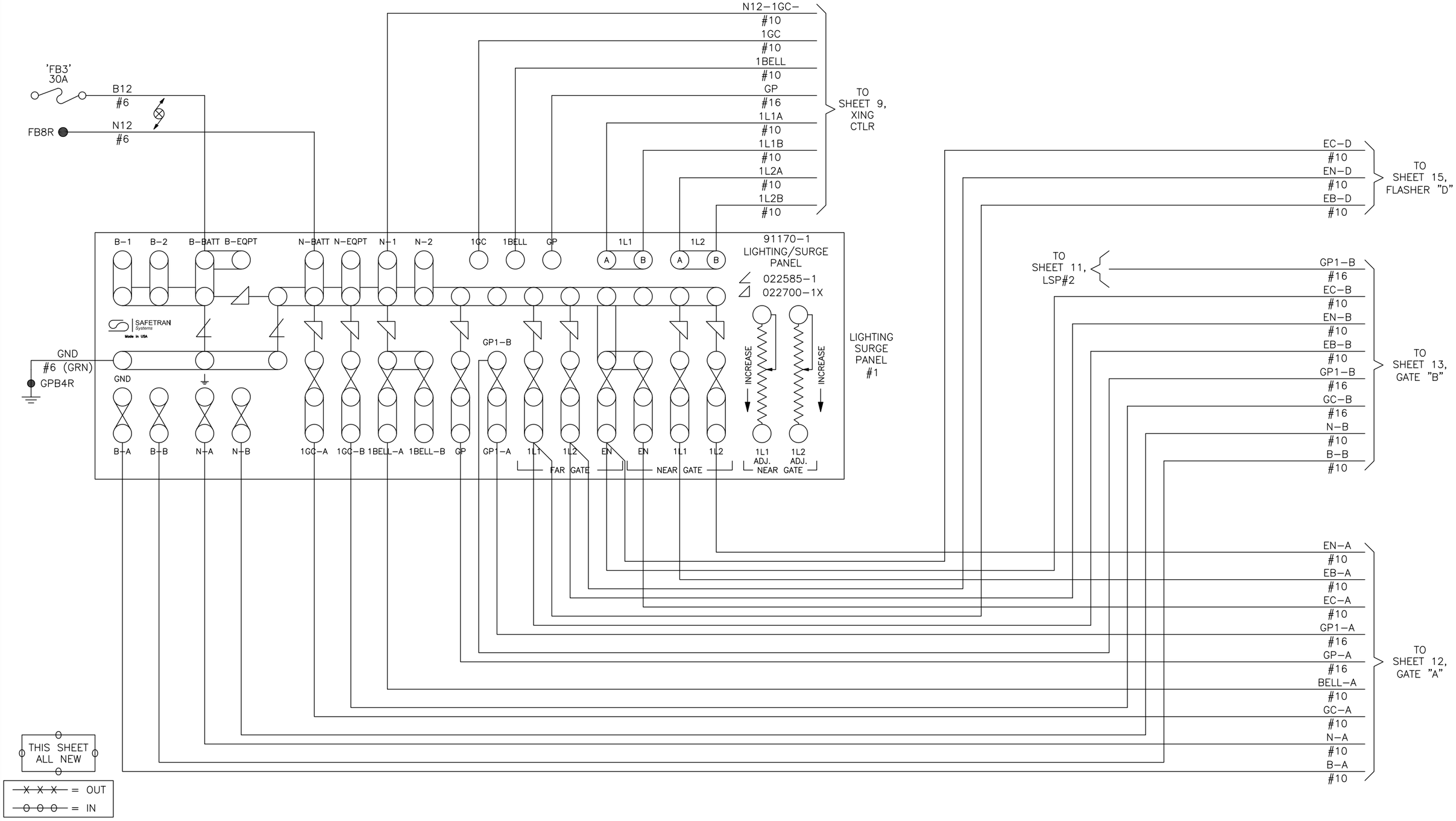

Jul 03, 2018 – 12:03pm J:\Project14\WMH170673\04–CAD\Signal\XC21210.dwg
kwong

NO.	DATE	REVISIONS
OP0	05-04-18	100% SUBMITTAL

REGISTERED PROFESSIONAL ENGINEER
PHUONG PHUOC HO
No. E 21083
EXP. 03–31–19
ELECTRICAL
STATE OF CALIFORNIA

SUBMITTED
SOUTH BAY SIGNAL, LLC
911 LAKEVILLE STREET, #354
PETALUMA, CA 94952
WWW.SOUTHBAYSIGNAL.COM
RSE, INC.
1075 OLD COUNTY ROAD
BELMONT, CA 94002
WWW.RSEINAL.COM

DESIGNED	CHECKED
T. RYAN	Q. HO
DRAWN	CAD FILE NAME
T. RYAN	XC21210

Santa Clara Valley Transportation Authority
Solutions that move you

APPROVED
WMH Corporation, Inc.
50 West San Fernando Street, Suite 950
San Jose, CA 95113-2412
Tel (408) 971-7300
Fax (408) 971-7400

CAD FILE DATE	SCALE
05-04-18	NONE
SUBMITTAL DATE	APPROVAL DATE 6-20-18
05-04-18	

GRADE CROSSING INNOVATION WY (WEST)
SIGNAL
LIGHTING SURGE PANEL #1
CASE "B"

PCA NO.	CONTRACT NO.	FILE LOCATION

SHEET	717
OF	736
DRAWING NO.	XC21210
REVISION	0

LIGHTING/SURGE PANEL
90978-12

TO SHEET 8
CROSSING CONTROL II

LVA(1) #10
LVA(2) #10
#10 GC
#10 GP
#10
BELL-A (BELL-1) #10
EB-A (EB1) #10
EN-A (EN1) #10
EC-A (E1) #10

LAMP VOLTAGE ADJ. .05 .05 .05

GC
GP2
TO SHT. 10

SIGNAL "C"
SIGNAL "D"
INCREASE

STANDBY LAMP VOLTAGE ADJ. .1 .1 .2

NOTE POLARITY

30A B12
FB3

#6 AWG INS. FLEX

SH.10 B12
SH.10 N12

FB8R N12

1		
2		
3		
4		
5	GP	GP1-A GP-A
6	GC	GP1-B
7	BELL	BELL-A
8	EB	EB-A
9	EN	EN-A
10	E	EN-B
		E-A
		E-B
11		
12		
13		
14		
15	B	B-A
16	GND	B-B
17	E	N-A
18	N	N-B
21		GP1-B
22		GP1-A
23		GP-A
24		GC-A
25		GC-B
26		BELL-A
27		BELL-B
28		EB-A
29		EB-B
30		EN-A
31		EN-B
32		E-A
33		E-B
34		B-A
35		B-B
36		N-A
37		N-B

TO GATE MECHANISM 'A'
SHEET 12

AB17	SPARE	
AB16	SPARE	#14
AB15	BELL-A	#14
AB12	GP1-A	#14
AB11	GP-A	#14
AB2	GC-A	#14
AB7	EB-A	
AB10	EN-A	
AB8	SPARE	
AB9	EC-A	
AB1	SPARE	
AB3	B-A	
AB4	B-A	
AB5	N-A	
AB6	N-A	

TO GATE MECHANISM "B"
SHEET 13

BB17	SPARE	
BB16	SPARE	#14
BB11	GP1-B	#14
BB12	GP2-B	#14
BB2	GC-B	#14
BB15	BELL-B	#14
BB7	EB-B	
BB8	SPARE	
BB10	EN-B	
BB1	SPARE	
BB9	EC-B	
BB3	B-B	
BB4	B-B	
BB5	N-B	
BB6	N-B	

NOTES:
1. WIRES TO BE #6 UNLESS DENOTED OTHERWISE.
2. FOR GROUNDING OF EQUIPMENT REFER TO SHEET 29

NO.	DATE	REVISIONS
OP2	05-04-18	100% SUBMITTAL
OP1	06-29-07	REVISED FOR INNOVATION WAY NAME
OP0	10-24-00	AS-BUILT - ISSUED FOR RECORD DRAWINGS

REGISTERED PROFESSIONAL ENGINEER — QUANG PHUOC NGO — No. E 21083 — EXP. 03-31-19 — ELECTRICAL — STATE OF CALIFORNIA

SUBMITTED
SOUTH BAY SIGNAL, LLC
911 LAKEVILLE STREET, #354
PETALUMA, CA 94952
WWW.SOUTHBAYSIGNAL.COM

RSE, INC.
1075 OLD COUNTY ROAD
BELMONT, CA 94002
WWW.RSEINC.COM

DESIGNED	CHECKED
T. RYAN	Q. HO
DRAWN	CAD FILE NAME
T. RYAN	XC21210X

Santa Clara Valley Transportation Authority
Solutions that move you

APPROVED
WMH Corporation, Inc.
50 West San Fernando Street, Suite 950
San Jose, CA 95113-2412
Tel (408) 971-7300
Fax (408) 971-7400

CAD FILE DATE	SCALE
05-04-18	NONE
SUBMITTAL DATE	APPROVAL DATE 6-20-18
05-04-18	

GRADE CROSSING INNOVATION WY (WEST) SIGNAL LIGHTING SURGE PANEL #1 (OUT)

SHEET	717X	
OF	736	
DRAWING NO.	XC21210X	
REVISION	2	
PCA NO.	CONTRACT NO.	FILE LOCATION

Jul 03, 2018 - 12:05pm J:\Project14\WMH170673\04-CAD\Signal\XC21210X.dwg
kwong

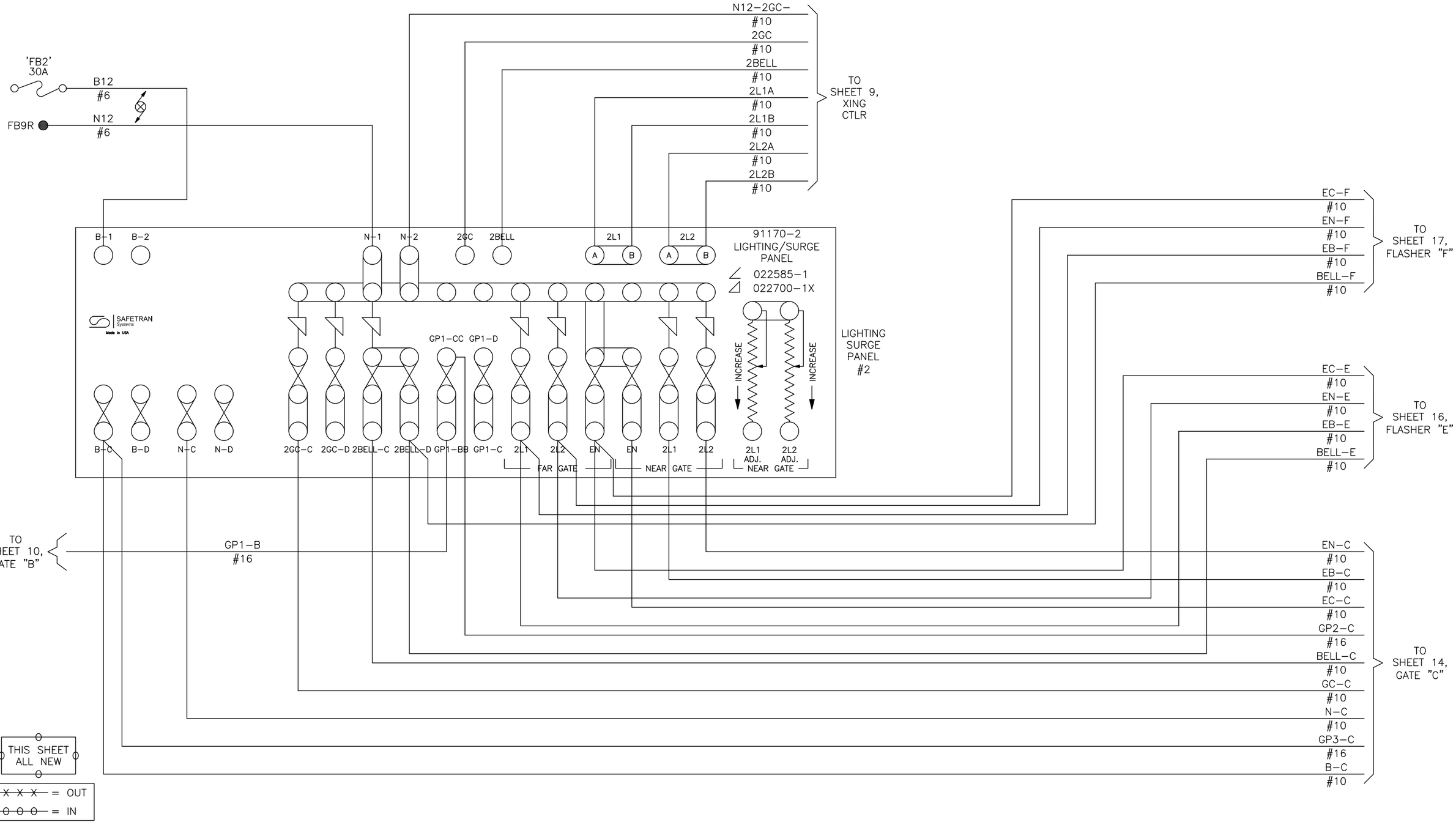

NO.	DATE	REVISIONS
OP0	05-04-18	100% SUBMITTAL

REGISTERED PROFESSIONAL ENGINEER
DUYNH PHUOCHUNG
No. E 21083
EXP 03-31-19
ELECTRICAL
STATE OF CALIFORNIA

SUBMITTED
SOUTH BAY SIGNAL, LLC
911 LAKEVILLE STREET, #354
PETALUMA, CA 94952
WWW.SOUTHBAYSIGNAL.COM
RSE, INC.
1075 OLD COUNTY ROAD
BELMONT, CA 94002
WWW.RSERAIL.COM

DESIGNED T. RYAN
CHECKED Q. HO
DRAWN T. RYAN
CAD FILE NAME XC21211

Santa Clara Valley Transportation Authority
Solutions that move you

APPROVED
WMH Corporation, Inc.
50 West San Fernando Street, Suite 950
San Jose, CA 95113-2412
Tel (408) 971-7300
Fax (408) 971-7400

CAD FILE DATE 05-04-18
SCALE NONE
SUBMITTAL DATE 05-04-18
APPROVAL DATE 6-20-18

GRADE CROSSING INNOVATION WY (WEST)
SIGNAL
LIGHTING SURGE PANEL #2
CASE "B"

SHEET 718 OF 736
DRAWING NO. XC21211
REVISION 0
PCA NO.
CONTRACT NO.
FILE LOCATION

kwong Jul 03, 2018 - 12:06pm J:\Project14\WMH170673\04-CAD\Signal\XC21211.dwg

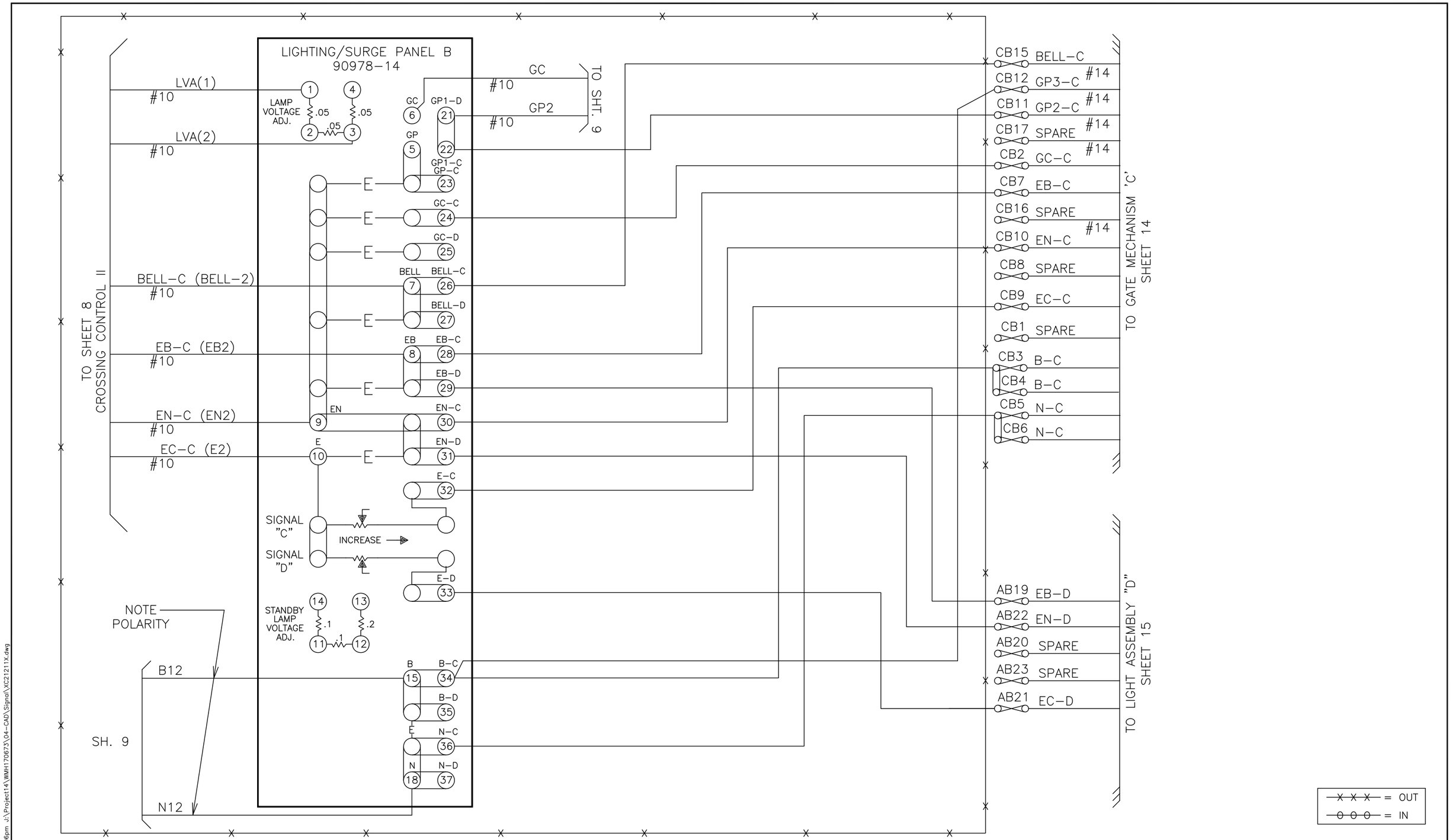

NO.	DATE	REVISIONS
OP2	05-04-18	100% SUBMITTAL
OP1	06-29-07	REVISED FOR INNOVATION WAY NAME
OP0	10-24-00	AS-BUILT - ISSUED FOR RECORD DRAWINGS

REGISTERED PROFESSIONAL ENGINEER — No. E 21083 — EXP. 03-31-19 — ELECTRICAL — STATE OF CALIFORNIA

SUBMITTED
SOUTH BAY SIGNAL, LLC
911 Lakeville Street, #354
Petaluma, CA 94952
www.SouthBaySignal.com

RSE, INC.
1075 Old County Road
Belmont, CA 94002
www.rsemail.com

DESIGNED	CHECKED
T. RYAN	Q. HO
DRAWN	CAD FILE NAME
T. RYAN	XC21211X

Santa Clara Valley Transportation Authority
Solutions that move you

APPROVED
WMH Corporation, Inc.
50 West San Fernando Street, Suite 950
San Jose, CA 95113-2412
Tel (408) 971-7300
Fax (408) 971-7400

CAD FILE DATE	SCALE
05-04-18	NONE
SUBMITTAL DATE	APPROVAL DATE 6-20-18
05-04-18	

GRADE CROSSING INNOVATION WY (WEST)
SIGNAL
LIGHTING SURGE PANEL #2 (OUT)

PCA NO.	CONTRACT NO.	FILE LOCATION

SHEET	OF
718X	736

DRAWING NO. XC21211X
REVISION 2

Jul 03, 2018 - 12:06pm J:\Project14\WMH170673\04-CAD\Signal\XC21211X.dwg
cheuk

NOTE: CAM CONTACTS SHOWN WITH GATE ARM AT 90°

GATE "A" JB

BELL

BELL–A #10 — AB15 — BELL–A #14 — JB11 — #10 — + BELL – #10 N–A

GP–A #16 — AB11 — GP–A #14 — JB7 — #16 — 5C 5B — 82° – 90°

GP1–A #16 — AB12 — GP1–A #14 — JB8 — #16

GC–A #10 — AB2 — GC–A #6 — JB6 — #16 — 4B 4C — 0° – 86° — MOTOR CONTROL RELAY + – COM 2A

GDA–RC #14 — JB10 — #16 — 2C 2B — 0° – 10° — PICK–UP COIL + – COM 2A

GD1–A #14 — JB9 — #16 — HOLDING COIL + – COM 1A

B–A #10 — AB3 — B–A #6 — JB5

B–A #10 — AB4 — B–A #6 — JB4 — #10 — 1C 1B — 3B 3C — 45° – 90° — POWER DOWN — A COM 2A — B12 1B

JB1

N–A #10 — AB5 — N–A #6 — JB2 — #10 — 1A 2A — COM

N–A #10 — AB6 — N–A #6 — JB3

JB13

JB14

SNUB ADJ. — 7B 7C — 0° – 10°

EB–A #10 — AB7 — EB–A #6 — JB15 — #10

JB16

EC–A #10 — AB9 — EC–A #6 — JB20 — #10

JB21

EN–A #10 — AB10 — EN–A #6 — JB22 — #10

JB23

AB1 — SPARE #6 — JB17

JB18

AB8 — SPARE #6 — JB19

JB24

AB16 — SPARE #14 — JB12

AB17 — SPARE #14

3C#16

EB (BLACK)
INNER CENTER TIP
EC (GREEN)
EN (WHITE)
GATE ARM

#1 #2 #3 #4

TO RECORDER SHEET 22

TO GATE AND LIGHT CONTROL SHEET 10

CONTACT	CLOSED	FUNCTION
2	0 – 10 DEG.	GATE DOWN
3	45 – 90 DEG.	POWER DOWN
4	0 – 86 DEG.	POWER UP
5	82 – 90 DEG.	GATE CLEAR
6	10 – 90 DEG.	
7	0 – 10 DEG.	SNUB

WCH 3593–E

—X X X— = OUT
—O O O— = IN

NO.	DATE	REVISIONS
OP3	05-04-18	100% SUBMITTAL
OP2	06-29-07	REPLACED FLASHER LAMPS WITH LEDS
OP1	10-04-04	REPLACED GATE LAMPS WITH LEDS
OP0	10-24-00	AS-BUILT - ISSUED FOR RECORD DRAWINGS

REGISTERED PROFESSIONAL ENGINEER — DUANE PHUOC HO — No. E 21083 EXP 03-31-19 — ELECTRICAL — STATE OF CALIFORNIA

SUBMITTED
SOUTH BAY SIGNAL, LLC
911 LAKEVILLE STREET, #354
PETALUMA, CA 94952
WWW.SOUTHBAYSIGNAL.COM

RSE, INC.
1075 OLD COUNTY ROAD
BELMONT, CA 94002
WWW.RSEINC.COM

DESIGNED T. RYAN | CHECKED Q. HO
DRAWN T. RYAN | CAD FILE NAME XC21212

Santa Clara Valley Transportation Authority
Solutions that move you

APPROVED
WMH Corporation, Inc.
50 West San Fernando Street, Suite 950
San Jose, CA 95113-2412
Tel (408) 971-7300
Fax (408) 971-7400

CAD FILE DATE 05-04-18 | SCALE NONE
SUBMITTAL DATE 05-04-18 | APPROVAL DATE 6-20-18

GRADE CROSSING INNOVATION WY (WEST)
SIGNAL
GATE MECHANISM "A"

SHEET 719
OF 736
DRAWING NO. XC21212
REVISION 3

PCA NO. | CONTRACT NO. | FILE LOCATION

Jul 03, 2018 – 12:06pm J:\Project14\WMH170673\04–CAD\Signal\XC21212.dwg
ccheuk

NOTE: CAM CONTACTS SHOWN WITH GATE ARM AT 90°

GATE "B" JB

TO RECORDER SHEET 22

TO GATE AND LIGHT CONTROL SHEET 10

BB15 BELL–B #14 JB11

GP1–B #16 — BB11 GP1–B #14 JB7 — #16 — 5C 5B 82° – 90°

GP2–B #16 — BB12 GP2–B #14 JB8 — #16

GC–B #10 — BB2 GC–B #6 JB6 — #16 — 4B 4C 0° – 86°

MOTOR CONTROL RELAY + – COM 2A

PICK–UP COIL + – COM 2A

HOLDING COIL + – COM 1A

POWER DOWN

3B 3C 45° – 90°

A COM 2A

B12 1B

GDB–RC #14 JB10 — #16 — 2C 2B 0° – 10°

GD2–B #14 JB9 — #16

B–B #10 — BB3 B–B #6 JB5

B–B #10 — BB4 B–B #6 JB4 — #10 — 1C 1B

JB1

N–B #10 — BB5 N–B #6 JB2 — #10 — 1A 2A COM

N–B #10 — BB6 N–B #6 JB3

SNUB ADJ.

7B 7C 0° – 10°

JB13

JB14

EB–B #10 — BB7 EB–B #6 JB15 — #10

JB16

EC–B #10 — BB9 EC–B #6 JB20 — #10

JB21

EN–B #10 — BB10 EN–B #6 JB22 — #10

JB23

BB1 SPARE #6 JB17

JB18

BB8 SPARE #6 JB19

JB24

BB16 SPARE #14 JB12

BB17 SPARE #14

3C#16

EB (BLACK)

INNER CENTER TIP

EC (GREEN)

EN (WHITE)

GATE ARM

#1 #2

CONTACT	CLOSED	FUNCTION
2	0 – 10 DEG.	GATE DOWN
3	45 – 90 DEG.	POWER DOWN
4	0 – 86 DEG.	POWER UP
5	82 – 90 DEG.	GATE CLEAR
6	10 – 90 DEG.	
7	0 – 10 DEG.	SNUB

WCH 3593–E

X X X = OUT

O O O = IN

NO.	DATE	REVISIONS
OP3	05-04-18	100% SUBMITTAL
OP2	06-29-07	REPLACED FLASHER LAMPS WITH LEDS
OP1	10-04-04	REPLACED GATE LAMPS WITH LEDS
OP0	10-24-00	AS-BUILT - ISSUED FOR RECORD DRAWINGS

REGISTERED PROFESSIONAL ENGINEER — DUONG PHUOC HO — No. E 21083 — EXP 03-31-19 — ELECTRICAL — STATE OF CALIFORNIA

SUBMITTED
SOUTH BAY SIGNAL, LLC
911 LAKEVILLE STREET, #354
PETALUMA, CA 94952
www.SouthBaySignal.com

RSE, INC.
1075 Old County Road
Belmont, CA 94002
www.rsemail.com

DESIGNED T. RYAN | CHECKED Q. HO
DRAWN T. RYAN | CAD FILE NAME XC21213

Santa Clara Valley Transportation Authority
Solutions that move you

APPROVED
WMH Corporation, Inc.
50 West San Fernando Street, Suite 950
San Jose, CA 95113-2412
Tel (408) 971-7300
Fax (408) 971-7400

CAD FILE DATE 05-04-18 | SCALE NONE
SUBMITTAL DATE 05-04-18 | APPROVAL DATE 6-20-18

GRADE CROSSING INNOVATION WY (WEST) SIGNAL GATE MECHANISM "B"

SHEET 720 OF 736
DRAWING NO. XC21213
REVISION 3

PCA NO. | CONTRACT NO. | FILE LOCATION

Jul 03, 2018 – 12:05pm J:\Project14\WMH170673\04–CAD\Signal\XC21213.dwg
ccheuk

NOTE: CAM CONTACTS SHOWN WITH GATE ARM AT 90°

GATE "C" JB

BELL

BELL-C #10 — CB15 — BELL-C #14 — JB11 — #10 — + BELL − — #10 N-C

GP2-C #16 — CB11 — GP2-C #14 — JB7 — #16 — 5C 5B (82° – 90°)

GP3-C #16 — CB12 — GP3-C #14 — JB8 — #16

GC-C #10 — CB2 — GC-C #6 — JB6 — #16 — 4B 4C (0° – 86°) — MOTOR CONTROL RELAY + − COM 2A

GDC-RC #14 — JB10 — #16 — 2C 2B (0° – 10°) — PICK-UP COIL + − COM 2A

GD3-C #14 — JB9 — #16 — HOLDING COIL + − COM 1A

B-C #10 — CB3 — B-C #6 — JB5

B-C #10 — CB4 — B-C #6 — JB4 — #10 — 1C 1B

3B 3C (45° – 90°) — POWER DOWN — A — COM 2A — B12 1B

JB1

N-C #10 — CB5 — N-C #6 — JB2 — #10 — 1A 2A — COM

N-C #10 — CB6 — N-C #6 — JB3

SNUB ADJ. — 7B 7C (0° – 10°)

JB13

JB14

EB-C #10 — CB7 — EB-C #6 — JB15 — #10

JB16

EC-C #10 — CB9 — EC-C #6 — JB20 — #10

JB21

EN-C #10 — CB10 — EN-C #6 — JB22 — #10

JB23

CB1 — SPARE #6 — JB17

JB18

CB8 — SPARE #6 — JB19

JB24

CB16 — SPARE #14 — JB12

CB17 — SPARE #14

3C#16

EB (BLACK)
INNER — CENTER — TIP
EC (GREEN)
EN (WHITE)
GATE ARM

#1 #2

TO RECORDER SHEET 22

TO GATE AND LIGHT CONTROL SHEET 11

CONTACT	CLOSED	FUNCTION
2	0 – 10 DEG.	GATE DOWN
3	45 – 90 DEG.	POWER DOWN
4	0 – 86 DEG.	POWER UP
5	82 – 90 DEG.	GATE CLEAR
6	10 – 90 DEG.	
7	0 – 10 DEG.	SNUB

WCH 3593-E

X X X = OUT
O O O = IN

NO.	DATE	REVISIONS
OP3	05-04-18	100% SUBMITTAL
OP2	06-29-07	REPLACED FLASHER LAMPS WITH LEDS
OP1	10-04-04	REPLACED GATE LAMPS WITH LEDS
OP0	10-24-00	AS-BUILT - ISSUED FOR RECORD DRAWINGS

REGISTERED PROFESSIONAL ENGINEER — DUONG PHUOC HO — No. E 21083 — EXP 03-31-19 — ELECTRICAL — STATE OF CALIFORNIA

SUBMITTED
SOUTH BAY SIGNAL, LLC
911 LAKEVALE STREET, #354
PETALUMA, CA 94952
WWW.SOUTHBAYSIGNAL.COM

RSE, INC.
1075 OLD COUNTY ROAD
BELMONT, CA 94002
WWW.RSEINC.COM

DESIGNED T. RYAN — CHECKED Q. HO
DRAWN T. RYAN — CAD FILE NAME XC21214

Santa Clara Valley Transportation Authority
Solutions that move you

APPROVED
WMH Corporation, Inc.
50 West San Fernando Street, Suite 950
San Jose, CA 95113-2412
Tel (408) 971-7300
Fax (408) 971-7400

CAD FILE DATE 05-04-18 — SCALE NONE
SUBMITTAL DATE 05-04-18 — APPROVAL DATE 6-20-18

GRADE CROSSING INNOVATION WY (WEST) SIGNAL GATE MECHANISM "C"

SHEET 721 OF 736
DRAWING NO. XC21214
REVISION 3

PCA NO. — CONTRACT NO. — FILE LOCATION

Jul 03, 2018 – 12:05pm J:\Project14\WMH170673\04-CAD\Signal\XC21214.dwg
ccheuk

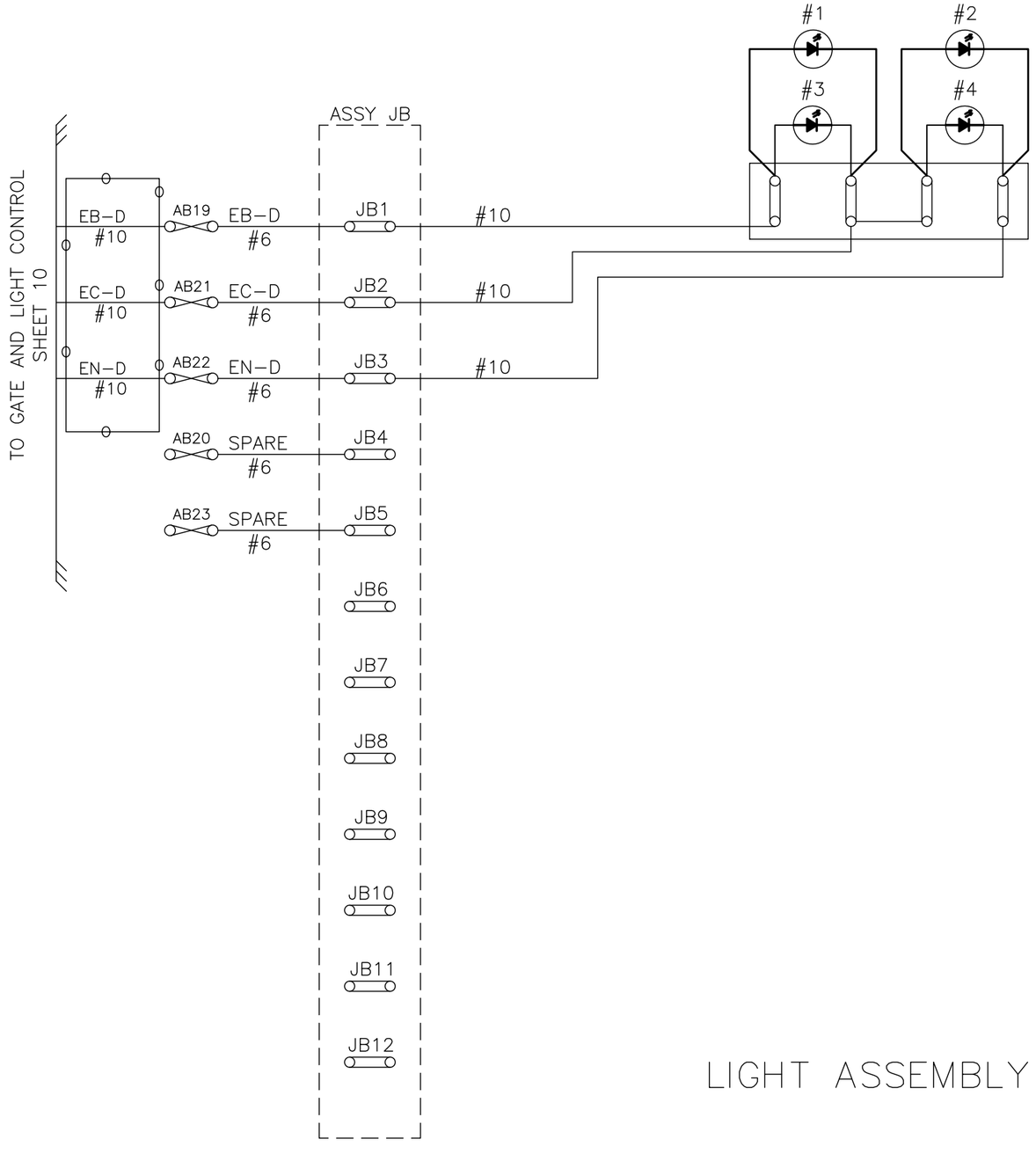

LIGHT ASSEMBLY 'D'

X X X = OUT
O O O = IN

NO.	DATE	REVISIONS
OP2	05-04-18	100% SUBMITTAL
OP1	06-29-07	REPLACED FLASHER LAMPS WITH LEDS
OP0	10-24-00	AS-BUILT - ISSUED FOR RECORD DRAWINGS

REGISTERED PROFESSIONAL ENGINEER — JOHNNY PHUOC HO — No. E 21083 — EXP 03-31-19 — ELECTRICAL — STATE OF CALIFORNIA

SUBMITTED
SOUTH BAY SIGNAL, LLC
911 LAKEVILLE STREET, #354
PETALUMA, CA 94952
WWW.SOUTHBAYSIGNAL.COM

RSE, INC.
1075 OLD COUNTY ROAD
BELMONT, CA 94002
WWW.RSEINC.COM

DESIGNED	CHECKED
T. RYAN	Q. HO
DRAWN	CAD FILE NAME
T. RYAN	XC21215

Santa Clara Valley Transportation Authority
Solutions that move you

APPROVED
WMH Corporation, Inc.
50 West San Fernando Street, Suite 950
San Jose, CA 95113-2412
Tel (408) 971-7300
Fax (408) 971-7400

CAD FILE DATE	SCALE
05-04-18	NONE
SUBMITTAL DATE	APPROVAL DATE 6-20-18
05-04-18	

GRADE CROSSING INNOVATION WY (WEST)
SIGNAL
LIGHT ASSEMBLY "D"

SHEET	OF
722	736

DRAWING NO. XC21215
REVISION 2

PCA NO.	CONTRACT NO.	FILE LOCATION

ccheuk Jul 03, 2018 – 12:04pm J:\Project14\WMH170673\04-CAD\Signal\XC21215.dwg

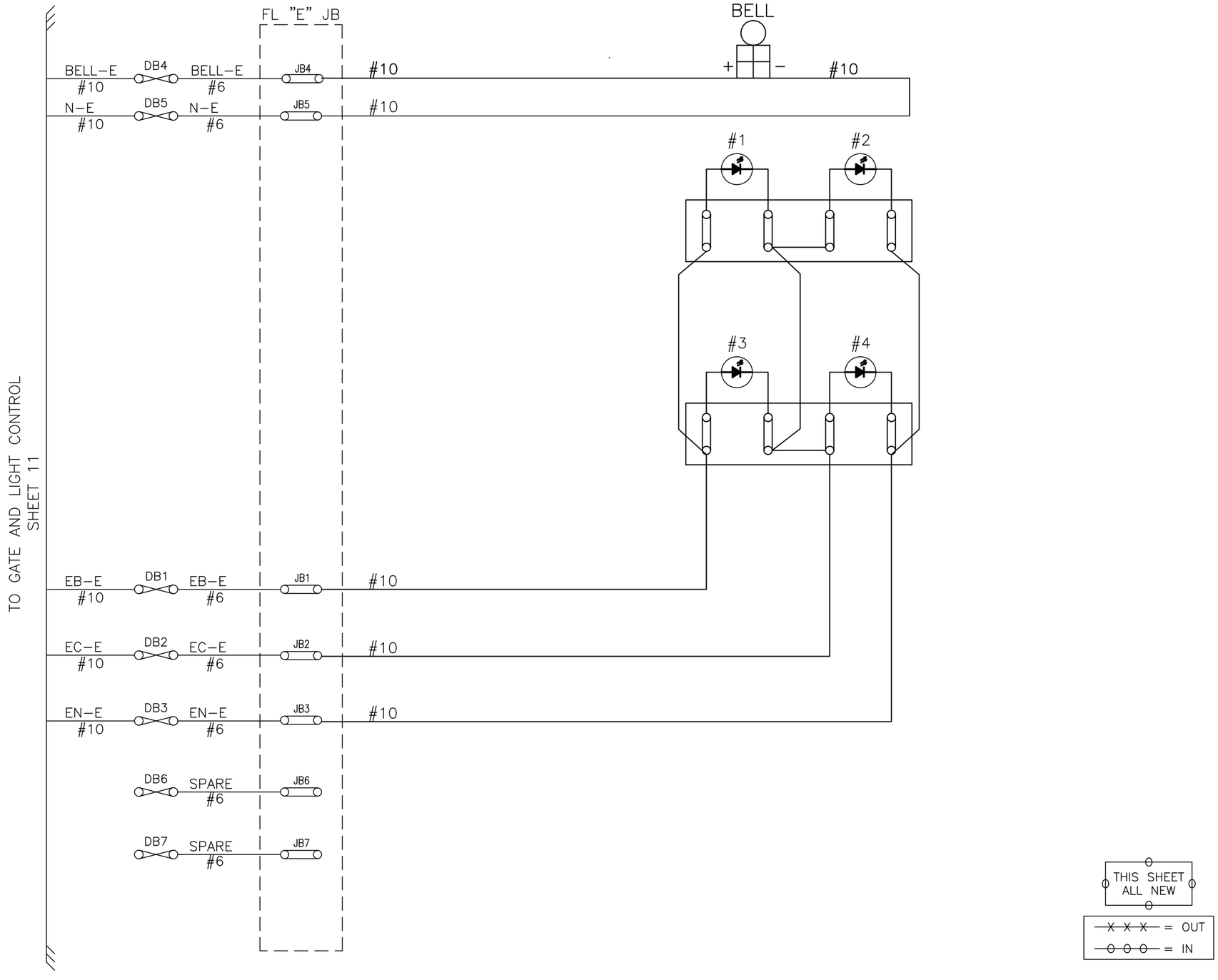

THIS SHEET ALL NEW

X X X = OUT

O O O = IN

NO.	DATE	REVISIONS
OP0	05-04-18	100% SUBMITTAL

REGISTERED PROFESSIONAL ENGINEER — ANTONY PHUOC HO — No. E 21083 — EXP 03-31-19 — ELECTRICAL — STATE OF CALIFORNIA

SUBMITTED

SOUTH BAY SIGNAL, LLC
911 LAKEVILLE STREET, #354
PETALUMA, CA 94952
WWW.SOUTHBAYSIGNAL.COM

RSE, INC.
1075 OLD COUNTY ROAD
BELMONT, CA 94002
WWW.RSEMAIL.COM

DESIGNED	CHECKED
T. RYAN	Q. HO
DRAWN	CAD FILE NAME
T. RYAN	XC21216

Santa Clara Valley Transportation Authority
Solutions that move you

APPROVED

WMH Corporation, Inc.
50 West San Fernando Street, Suite 950
San Jose, CA 95113-2412
Tel (408) 971-7300
Fax (408) 971-7400

CAD FILE DATE	SCALE
05-04-18	NONE
SUBMITTAL DATE	APPROVAL DATE 6-20-18
05-04-18	

GRADE CROSSING INNOVATION WY (WEST)
SIGNAL
LIGHT ASSEMBLY "E"

PCA NO.	CONTRACT NO.	FILE LOCATION

SHEET 723 OF 736
DRAWING NO. XC21216
REVISION 0

ccheuk Jul 03, 2018 – 12:03pm J:\Project14\WMH170673\04-CAD\Signal\XC21216.dwg

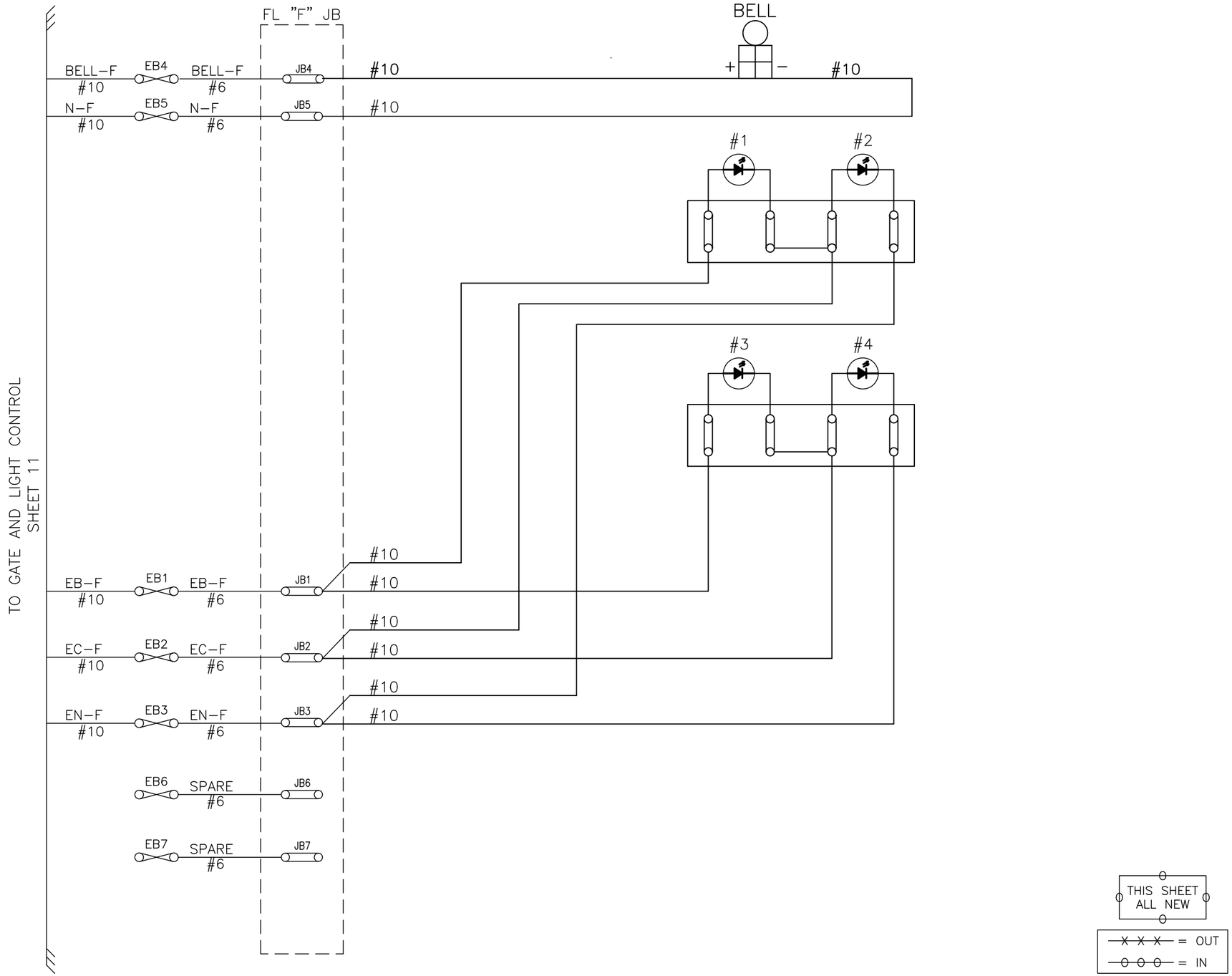

cchcuk Jul 03, 2018 - 12:02pm J:\Project114\WMH170673\04-CAD\Signal\XC21217.dwg

NO.	DATE	REVISIONS
OP0	05-04-18	100% SUBMITTAL

REGISTERED PROFESSIONAL ENGINEER TIMOTHY PHUOC HO No. E 21083 EXP 03-31-19 ELECTRICAL STATE OF CALIFORNIA

SUBMITTED
SOUTH BAY SIGNAL, LLC
911 LAKEVILLE STREET, #354
PETALUMA, CA 94952
WWW.SOUTHBAYSIGNAL.COM

RSE, INC.
1075 OLD COUNTY ROAD
BELMONT, CA 94002
WWW.RSEMAIL.COM

DESIGNED	CHECKED
T. RYAN	Q. HO
DRAWN	CAD FILE NAME
T. RYAN	XC21217

Santa Clara Valley Transportation Authority
Solutions that move you

APPROVED
WMH Corporation, Inc.
50 West San Fernando Street, Suite 950
San Jose, CA 95113-2412
Tel (408) 971-7300
Fax (408) 971-7400

CAD FILE DATE	SCALE
05-04-18	NONE
SUBMITTAL DATE	APPROVAL DATE 6-20-18
05-04-18	

GRADE CROSSING INNOVATION WY (WEST)
SIGNAL
LIGHT ASSEMBLY "F"

PCA NO.	CONTRACT NO.	FILE LOCATION

SHEET	724
OF	736
DRAWING NO.	XC21217
REVISION	0

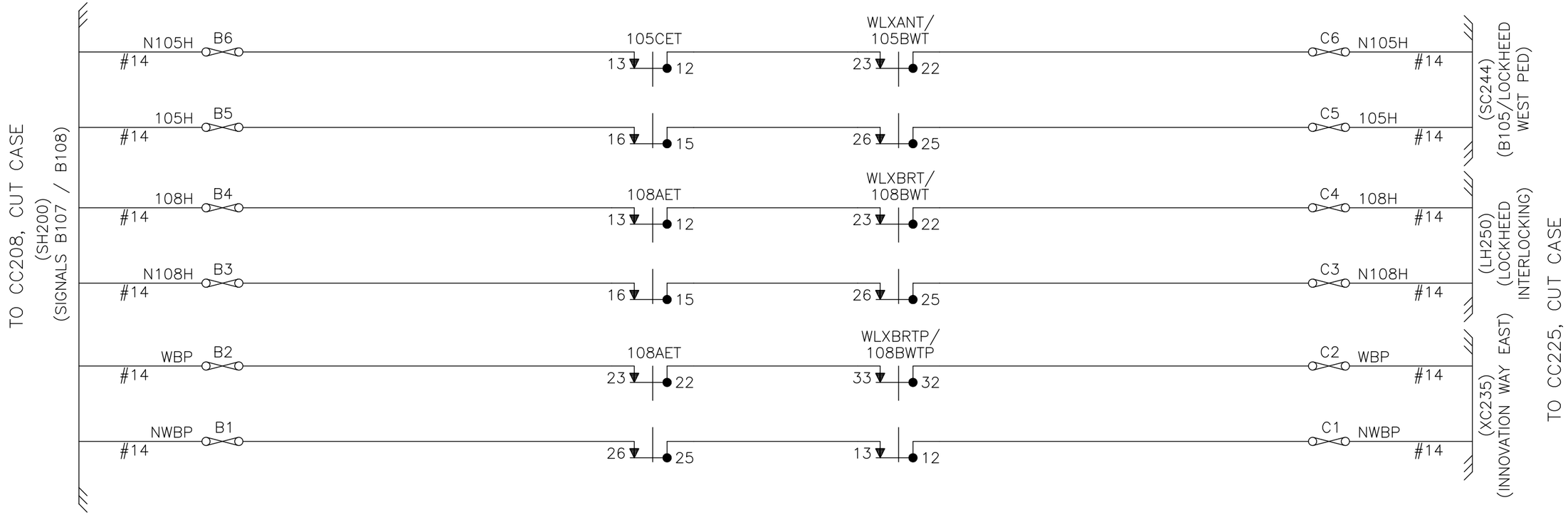

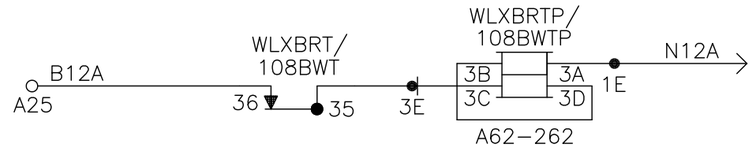

X X X = OUT

O O O = IN

NOTE: WIRE TO BE NO. 16 UNLESS DENOTED OTHERWISE.

NO.	DATE	REVISIONS
OP2	06-29-07	REVISED FOR INNOVATION WAY NAME
OP1	11-05-01	AS INSTALLED PER MOFFETT PARK CHANGES
OP0	10-24-00	AS-BUILT - ISSUED FOR RECORD DRAWINGS

REGISTERED PROFESSIONAL ENGINEER — JOHNNY PHUOC HO — No. E 21083 — EXP. 03-31-19 — ELECTRICAL — STATE OF CALIFORNIA

SUBMITTED

SOUTH BAY SIGNAL, LLC
911 LAKEVILLE STREET, #354
PETALUMA, CA 94952
WWW.SOUTHBAYSIGNAL.COM

RSE, INC.
1075 OLD COUNTY ROAD
BELMONT, CA 94002
WWW.RSEINC.COM

DESIGNED	CHECKED
T. RYAN	Q. HO
DRAWN	CAD FILE NAME
T. RYAN	XC21218

Santa Clara Valley Transportation Authority
Solutions that move you

APPROVED

WMH Corporation, Inc.
50 West San Fernando Street, Suite 950
San Jose, CA 95113-2412
Tel (408) 971-7300
Fax (408) 971-7400

CAD FILE DATE	SCALE
05-04-18	NONE
SUBMITTAL DATE	APPROVAL DATE 6-20-18
05-04-18	

GRADE CROSSING INNOVATION WY (WEST)
SIGNAL
LINE CIRCUITS
CASE "A"

SHEET	OF
725	736

DRAWING NO. XC21218

REVISION 2

PCA NO.	CONTRACT NO.	FILE LOCATION

Jul 03, 2018 – 12:02pm J:\Project14\WMH170673\04-CAD\Signal\XC21218.dwg
ccheuk

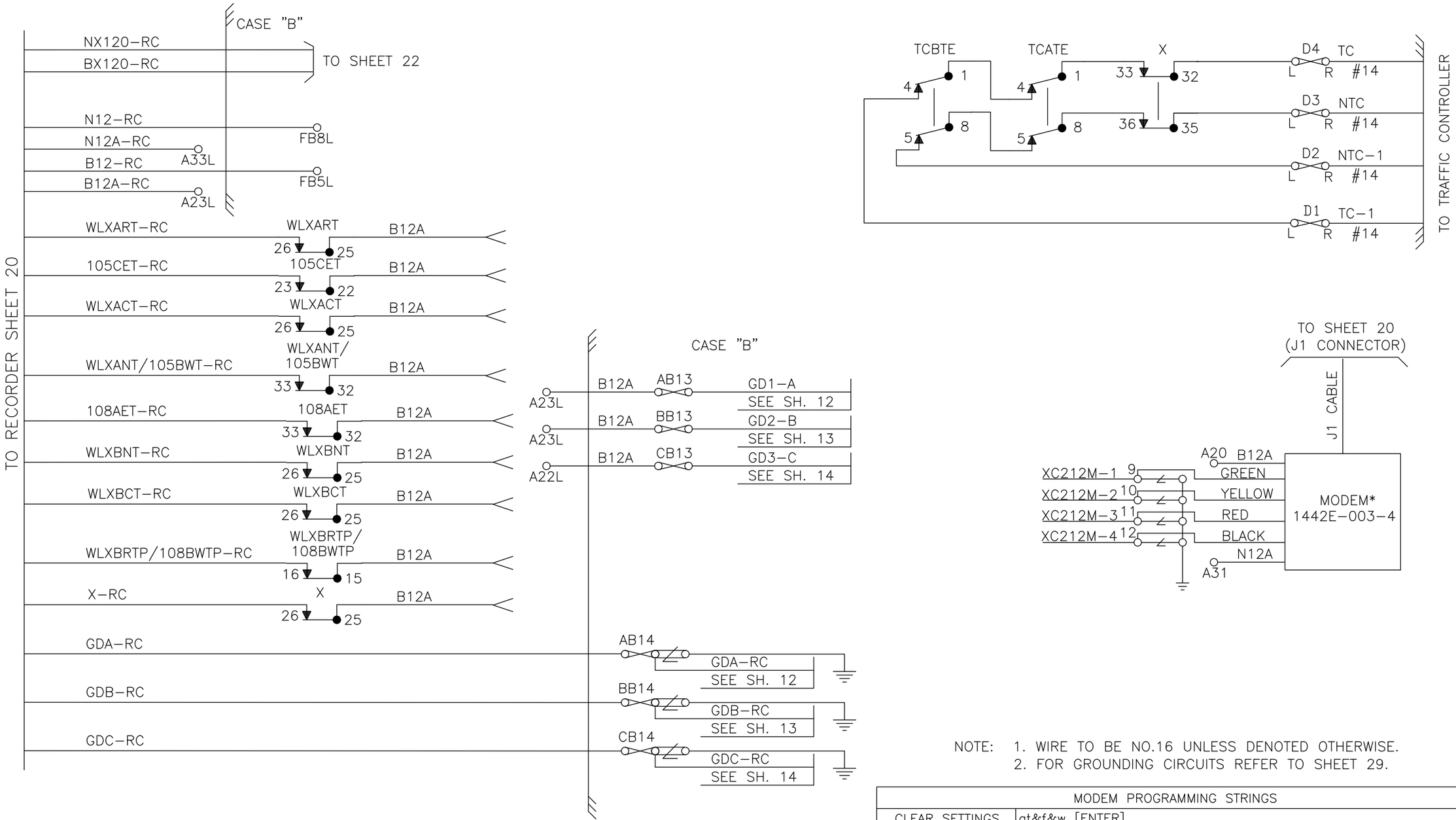

NOTE: 1. WIRE TO BE NO.16 UNLESS DENOTED OTHERWISE.
2. FOR GROUNDING CIRCUITS REFER TO SHEET 29.

MODEM PROGRAMMING STRINGS	
CLEAR SETTINGS	at&f&w [ENTER]
"ORIGINATE" MODE	at&f&l1&k0&d0\h1\f1\n0e0q1+ms=9,0,9600,9600s7=200&w [ENTER]
* "ANSWER" MODE	at&f&l1&k0&d0\h1\f0\n0e0q1+ms=9,0,9600,9600s7=30&w [ENTER]

NO.	DATE	REVISIONS
OP2	06-29-07	REVISED FOR MODEM PROG & NAME
OP1	07-03-04	REVISED FOR TRAFFIC PRE-EMPTION CIRCUITS
OP0	10-24-00	AS-BUILT - ISSUED FOR RECORD DRAWINGS

REGISTERED PROFESSIONAL ENGINEER — PHUOC HO — No. E 21083 — EXP. 03-31-19 — ELECTRICAL — STATE OF CALIFORNIA

SUBMITTED: SOUTH BAY SIGNAL, LLC, 911 LAKEVILLE STREET, #354, PETALUMA, CA 94952, WWW.SOUTHBAYSIGNAL.COM — RSE, INC., 1075 OLD COUNTY ROAD, BELMONT, CA 94002, WWW.RSEINC.COM

DESIGNED	CHECKED
T. RYAN	Q. HO
DRAWN: T. RYAN	CAD FILE NAME: XC21219

Santa Clara Valley Transportation Authority — Solutions that move you

APPROVED: WMH Corporation, Inc., 50 West San Fernando Street, Suite 950, San Jose, CA 95113-2412, Tel (408) 971-7300, Fax (408) 971-7400

CAD FILE DATE	SCALE
05-04-18	NONE
SUBMITTAL DATE: 05-04-18	APPROVAL DATE 6-20-18

GRADE CROSSING INNOVATION WY (WEST)
SIGNAL
RECORDER CIRCUITS AND TRAFFIC
CASE "A"

SHEET 726 OF 736 — DRAWING NO. XC21219 — REVISION 2

PCA NO. | CONTRACT NO. | FILE LOCATION

Jul 03, 2018 – 12:01pm J:\Project14\WMH170673\04–CAD\Signal\XC21219.dwg
ccheuk

INDICATORS

○ L1	105CET–RC	○ L9	.	○ L17	.	○ L25	B12A–RC
○ L2	WLXART–RC	○ L10	WLXBRTP/ 108BWTP–RC	○ L18	.	○ L26	B12–RC
○ L3	WLXACT–RC	○ L11	X–RC	○ L19	.	○ L27	.
○ L4	.	○ L12	.	○ L20	.	○ L28	.
○ L5	WLXANT/ 105BWT–RC	○ L13	GDA–RC	○ L21	.	○ L29	BX120–RC
○ L6	108AET–RC	○ L14	GDB–RC	○ L22	.	○ L30	.
○ L7	WLXBNT–RC	○ L15	GDC–RC	○ L23	.	○ L31	.
○ L8	WLXBCT–RC	○ L16	.	○ L24	.	○ L32	.

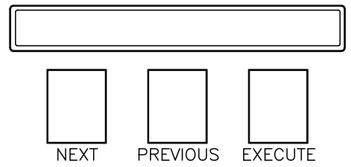

SAFETRAN EVENT
ANALYZER/RECORDER (SEA/R)
PROCESSOR/DISPLAY UNIT
A80251

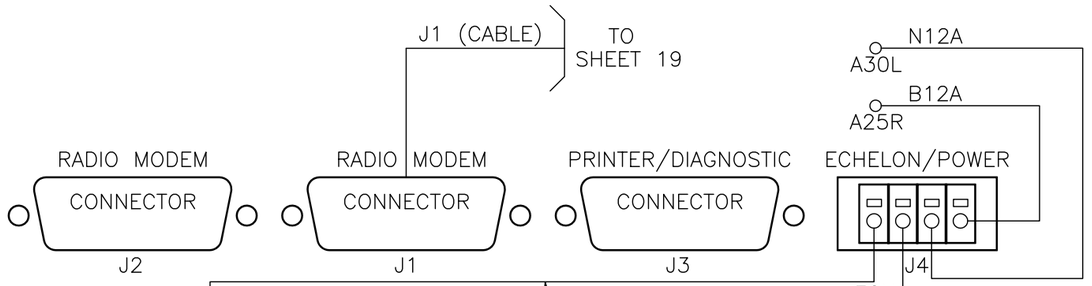

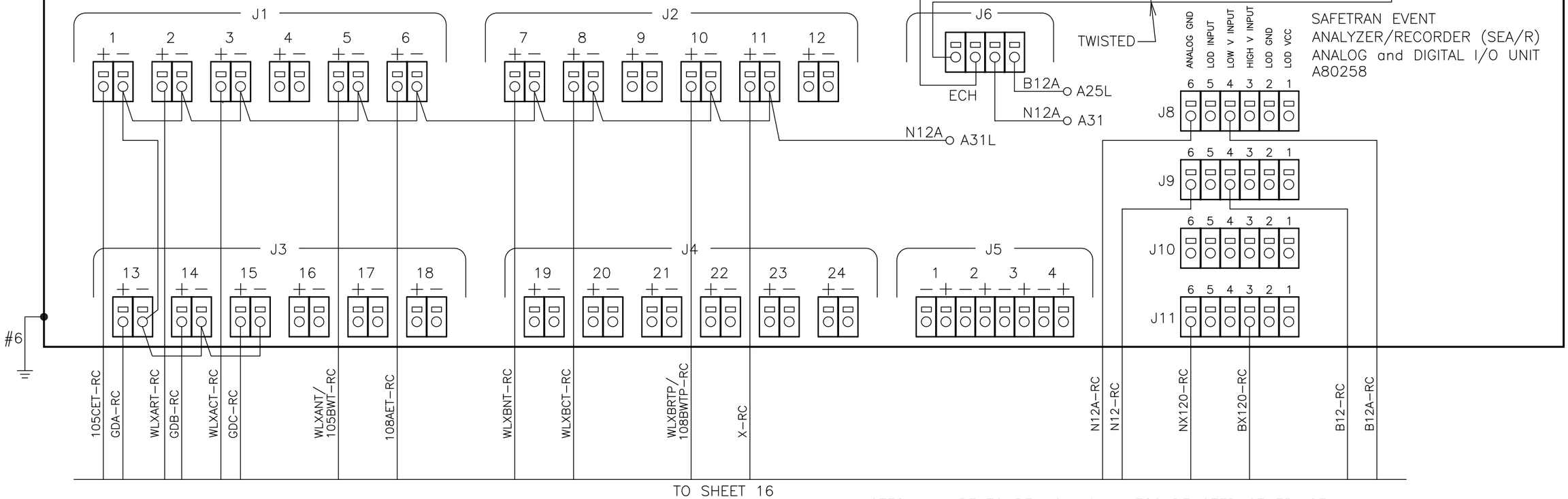

SAFETRAN EVENT
ANALYZER/RECORDER (SEA/R)
ANALOG and DIGITAL I/O UNIT
A80258

TO SHEET 16

NOTES: 1. WIRE TO BE NO. 16 UNLESS DENOTED OTHERWISE.
2. FOR GROUNDING OF EQUIPMENT REFER TO SHEET 29.

NO.	DATE	REVISIONS
OP1	06-29-07	REVISED FOR INNOVATION WAY NAME
OP0	10-24-00	AS-BUILT - ISSUED FOR RECORD DRAWINGS

REGISTERED PROFESSIONAL ENGINEER — No. E 21083 — EXP 03-31-19 — ELECTRICAL — STATE OF CALIFORNIA

SUBMITTED
SOUTH BAY SIGNAL, LLC
911 Lakeville Street, #354
Petaluma, CA 94952
www.SouthBaySignal.com

RSE, INC.
1075 Old County Road
Belmont, CA 94002
www.rserail.com

DESIGNED	CHECKED
T. RYAN	Q. HO
DRAWN	CAD FILE NAME
T. RYAN	XC21220

Santa Clara Valley Transportation Authority
Solutions that move you

APPROVED
WMH Corporation, Inc.
50 West San Fernando Street, Suite 950
San Jose, CA 95113-2412
Tel (408) 971-7300
Fax (408) 971-7400

CAD FILE DATE	SCALE
05-04-18	NONE
SUBMITTAL DATE	APPROVAL DATE 6-20-18
05-04-18	

GRADE CROSSING INNOVATION WY (WEST)
SIGNAL
EVENT RECORDER
CASE "A"

PCA NO.	CONTRACT NO.	FILE LOCATION

SHEET 727 OF 736
DRAWING NO. XC21220
REVISION 1

cheuk Jul 03, 2018 – 12:00pm J:\Project14\WMH170673\04-CAD\Signal\XC21220.dwg

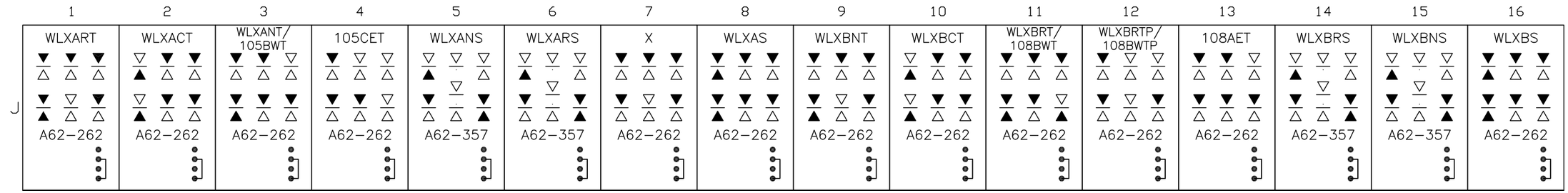

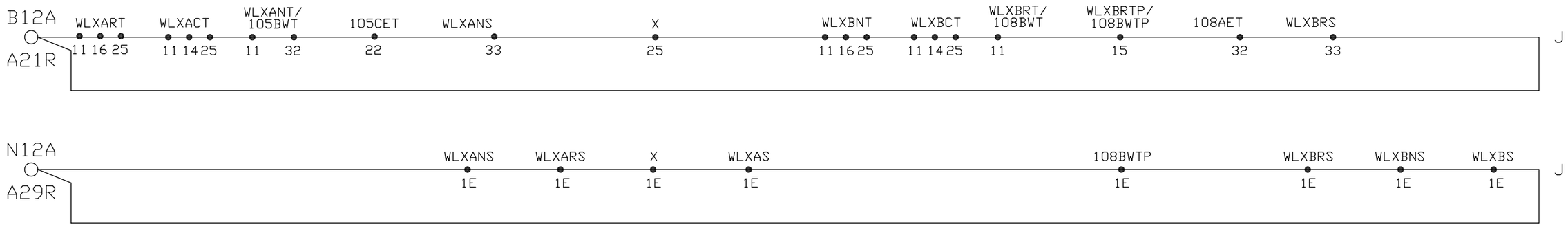

▼ = DENOTES CONTACT IS USED

▽ = DENOTES SPARE CONTACT

NOTE: WIRE TO BE NO. 16 UNLESS DENOTED OTHERWISE.

CONTACT/COIL ARRANGEMENT
(FRONT RELAY)

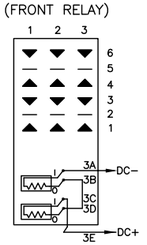

A62-262

CONTACT/COIL ARRANGEMENT
(FRONT RELAY)

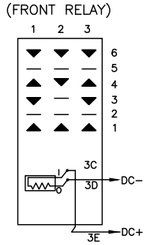

A62-357

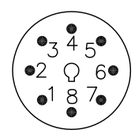

H3CA-8

NO.	DATE	REVISIONS
OP4	06-29-07	REVISED FOR INNOVATION WAY NAME
OP3	09-02-04	REVISED MPEPXANA AND MPEPXBRA CIRCUITS
OP2	07-03-04	REVISED FOR TRAFFIC PRE-EMPTION CIRCUITS
OP1	11-05-01	AS INSTALLED PER MOFFETT PARK CHANGES
OP0	10-24-00	AS-BUILT - ISSUED FOR RECORD DRAWINGS

REGISTERED PROFESSIONAL ENGINEER — No. E 21083 — EXP. 03-31-19 — ELECTRICAL — STATE OF CALIFORNIA

SUBMITTED

SOUTH BAY SIGNAL, LLC
911 LAKEVILLE STREET, #354
PETALUMA, CA 94952
WWW.SOUTHBAYSIGNAL.COM

RSE, INC.
1075 OLD COUNTY ROAD
BELMONT, CA 94002
WWW.RSEINC.COM

DESIGNED	CHECKED
T. RYAN	Q. HO
DRAWN	CAD FILE NAME
T. RYAN	XC21221

Santa Clara Valley Transportation Authority
Solutions that move you

APPROVED

WMH Corporation, Inc.
50 West San Fernando Street, Suite 950
San Jose, CA 95113-2412
Tel (408) 971-7300
Fax (408) 971-7400

CAD FILE DATE	SCALE
05-04-18	NONE
SUBMITTAL DATE	APPROVAL DATE 6-20-18
05-04-18	

GRADE CROSSING INNOVATION WY (WEST)
SIGNAL
ENERGY LOOPS & RELAY
CONTACT ASSIGNMENT, CASE "A"

PCA NO.	CONTRACT NO.	FILE LOCATION

SHEET	728
OF	736
DRAWING NO.	XC21221
REVISION	4

ccheuk Jul 03, 2018 - 12:00pm J:\Project14\WMH170673\04-CAD\Signal\XC21221.dwg

ISOLATION XFMR
SEE SHEET 5
BX120
NX120
BX120
NX120
AC SUB PANEL
30 AMP. AC BREAKER
#10 FLEX
BX120
NX120
SURGE PROTECTOR LPC20104-1
NRS-12/20 RECTIFIER
TEMPERATURE COMPENSATION
#14
#6
#6
#6
H2
H3
H1
I3
I2
I1
B12A BUSS
N12A BUSS
5 CELLS SLM 166-2 166Ah
BATTERY BANK 166-2 AH
CASE "A"
A16
A26
A28
#6
#6
CASE "A"
BX120
NX120
30 AMP. AC BREAKER
SEE B12 CHARGER SHEET 8
3A
FAN
M
LINE VOLTAGE THERMOSTAT
SET AT 85°
#14 FLEX
#14 FLEX
NEUTRAL BUSS
15 AMP A.C. G.F.I.-115
LIGHT SWITCH
BX120
NX120
PIGTAIL
GROUND BUSS
CASE LIGHT
#14 FLEX
APPLIANCE RECPTACLE 120V AC
B34R BX120-RC
B30R NX120-RC
TO RECORDER SHEET 20
#14 FLEX
CASE "A"
B33R
B29R
L R
L R
15 AMP A.C. G.F.I.-115
LIGHT SWITCH
BX120
NX120
APPLIANCE RECPTACLE 120V AC
PIGTAIL
GROUND BUSS
AC SUB PANEL
CASE LIGHT
#14 FLEX
BX120
NX120
B32R
B28R
L R
L R
3A
FAN
M
LINE VOLTAGE THERMOSTAT
#14 FLEX
#14 FLEX
SET AT 85°
CASE "A"
BX120
NX120
SEE CROSSING CONTROLLER SHEET 8
= OUT
= IN

NOTES: 1. WIRE TO BE NO. 10 UNLESS DENOTED OTHERWISE.
2. FOR GROUNDING OF EQUIPMENT REFER TO SHEET 29.

NO.	DATE	REVISIONS
OP2	05-04-18	100% SUBMITTAL
OP1	06-29-07	REVISED FOR INNOVATION WAY NAME
OP0	10-24-00	AS-BUILT - ISSUED FOR RECORD DRAWINGS

REGISTERED PROFESSIONAL ENGINEER — ANTHONY PHUOC HO — No. E 21083 — EXP 03-31-19 — ELECTRICAL — STATE OF CALIFORNIA

SUBMITTED
SOUTH BAY SIGNAL, LLC
911 LAKEVILLE STREET, #354
PETALUMA, CA 94952
WWW.SOUTHBAYSIGNAL.COM
RSE, INC.
1075 OLD COUNTY ROAD
BELMONT, CA 94002
WWW.RSEINC.COM

DESIGNED	CHECKED
T. RYAN	Q. HO
DRAWN	CAD FILE NAME
T. RYAN	XC21222

Santa Clara Valley Transportation Authority
Solutions that move you

APPROVED
WMH Corporation, Inc.
50 West San Fernando Street, Suite 950
San Jose, CA 95113-2412
Tel (408) 971-7300
Fax (408) 971-7400

CAD FILE DATE	SCALE
05-04-18	NONE
SUBMITTAL DATE	APPROVAL DATE 6-20-18
05-04-18	

GRADE CROSSING INNOVATION WY (WEST) SIGNAL ENERGY DISTRIBUTION CASE "B"

SHEET	OF	DRAWING NO.	REVISION
729	736	XC21222	2

PCA NO. | CONTRACT NO. | FILE LOCATION

cheuk Jul 03, 2018 - 11:59am J:\Project14\WMH170673\04-CAD\Signal\XC21222.dwg

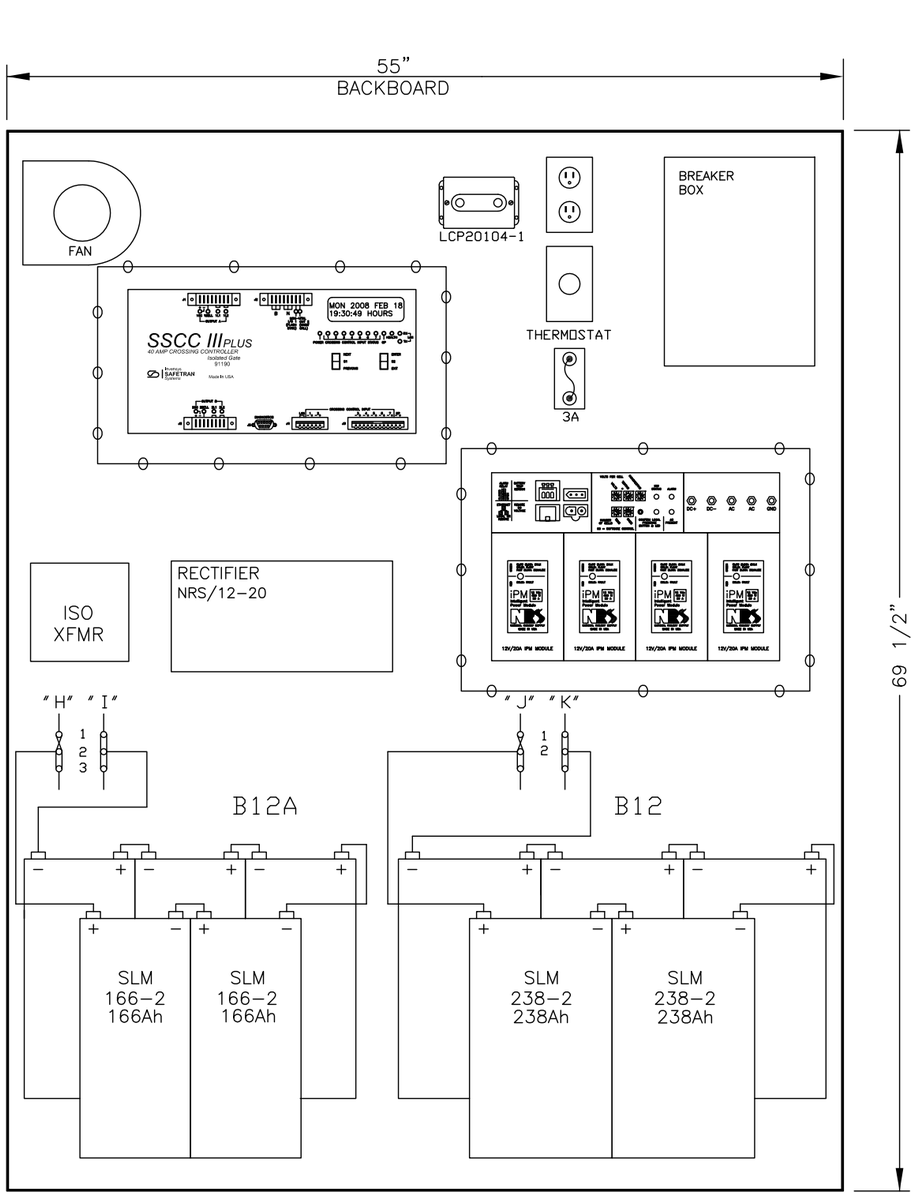

FRONT

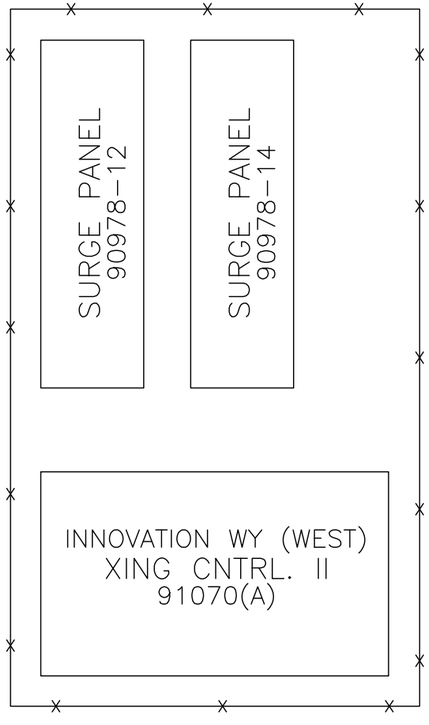

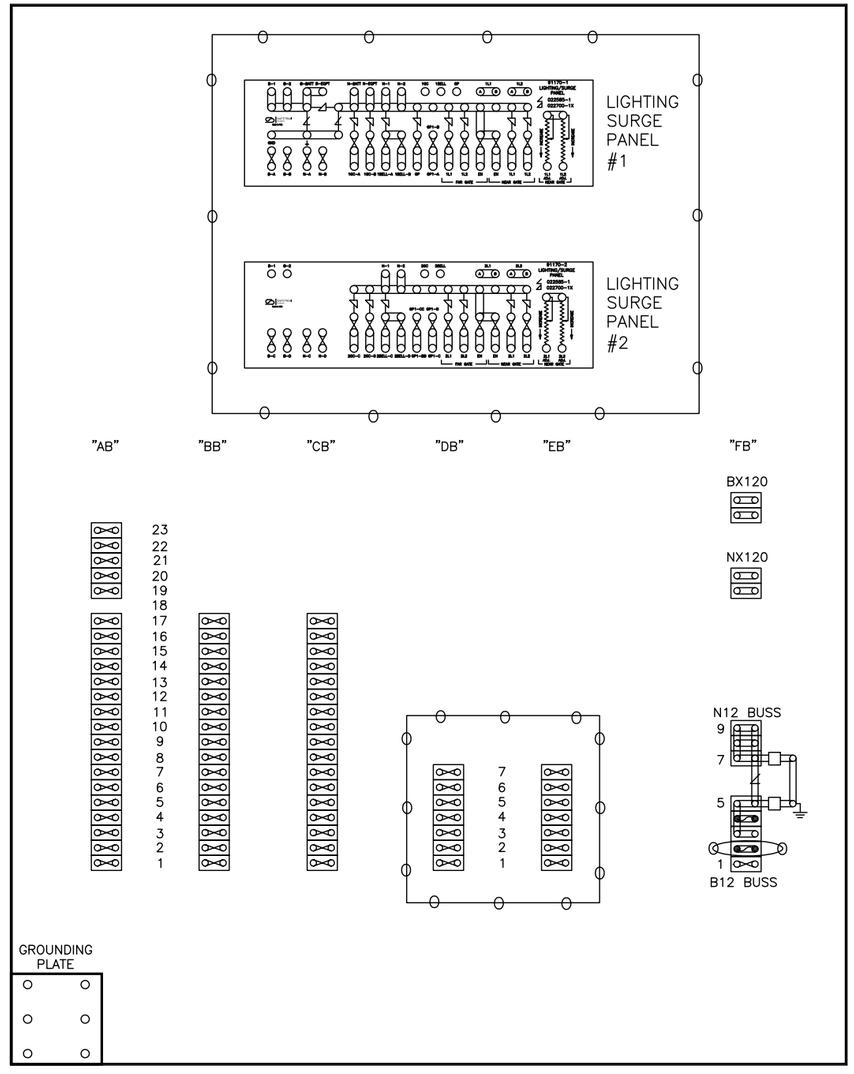

BACK

= IN
= OUT

NO.	DATE	REVISIONS
OP2	05-04-18	100% SUBMITTAL
OP1	6-29-07	REVISED FOR INNOVATION WAY NAME
OP0	10-24-00	AS-BUILT - ISSUED FOR RECORD DRAWINGS

REGISTERED PROFESSIONAL ENGINEER — DUONG PHUOC HO — No. E 21083 EXP 03-31-19 — ELECTRICAL — STATE OF CALIFORNIA

SUBMITTED
SOUTH BAY SIGNAL, LLC
911 LAKEVILLE STREET, #354
PETALUMA, CA 94952
WWW.SOUTHBAYSIGNAL.COM

RSE, INC.
1075 OLD COUNTY ROAD
BELMONT, CA 94002
WWW.RSEINC.COM

DESIGNED	CHECKED
T. RYAN	Q. HO
DRAWN	CAD FILE NAME
T. RYAN	XC21223

Santa Clara Valley Transportation Authority
Solutions that move you

APPROVED
WMH Corporation, Inc.
50 West San Fernando Street, Suite 950
San Jose, CA 95113-2412
Tel (408) 971-7300
Fax (408) 971-7400

CAD FILE DATE	SCALE
05-04-18	NONE
SUBMITTAL DATE	APPROVAL DATE 6-20-18
05-04-18	

GRADE CROSSING INNOVATION WY (WEST) SIGNAL EQUIPMENT LAYOUT CASE "B"

SHEET	730
OF	736
DRAWING NO.	XC21223
REVISION	2

PCA NO.	CONTRACT NO.	FILE LOCATION

Jul 03, 2018 - 11:58am J:\Project14\WMH170673\04-CAD\Signal\XC21223.dwg
ccheuk

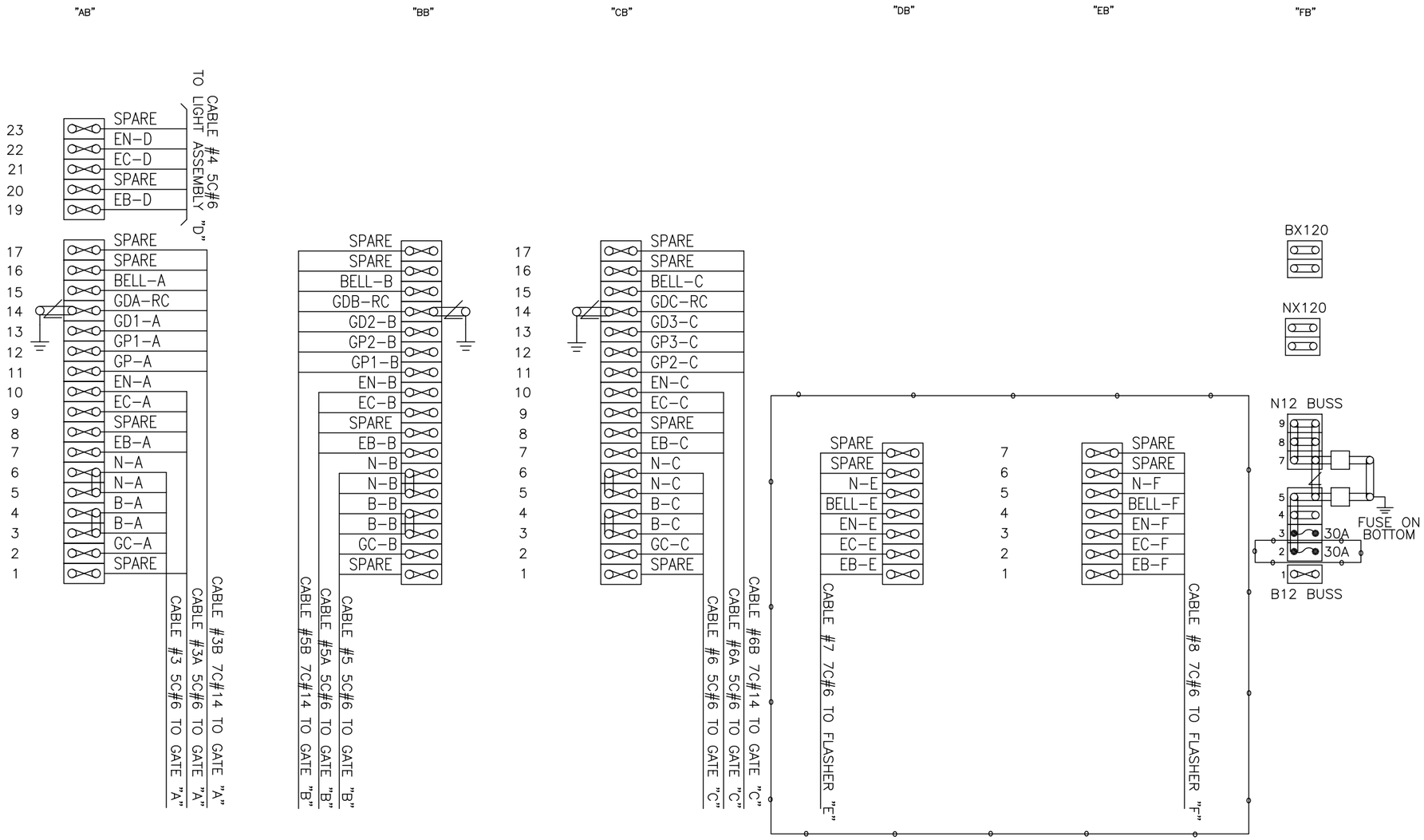

NO.	DATE	REVISIONS
OP2	05-04-18	100% SUBMITTAL
OP1	06-29-07	REVISED FOR INNOVATION WAY NAME
OP0	10-24-00	AS-BUILT - ISSUED FOR RECORD DRAWINGS

REGISTERED PROFESSIONAL ENGINEER — ANTHONY PHUOC HO — No. E 21083 EXP 03-31-19 — ELECTRICAL — STATE OF CALIFORNIA

SUBMITTED
SOUTH BAY SIGNAL, LLC
911 LAKEVILLE STREET, #354
PETALUMA, CA 94952
WWW.SOUTHBAYSIGNAL.COM

RSE, INC.
1075 OLD COUNTY ROAD
BELMONT, CA 94002
WWW.RSEMAIL.COM

DESIGNED	CHECKED
T. RYAN	Q. HO
DRAWN	CAD FILE NAME
T. RYAN	XC21224

Santa Clara Valley Transportation Authority
Solutions that move you

APPROVED
WMH Corporation, Inc.
50 West San Fernando Street, Suite 950
San Jose, CA 95113-2412
Tel (408) 971-7300
Fax (408) 971-7400

CAD FILE DATE	SCALE
05-04-18	NONE
SUBMITTAL DATE	APPROVAL DATE 6-20-18
05-04-18	

GRADE CROSSING INNOVATION WY (WEST)
SIGNAL
TERMINAL BOARD "B"
CASE "B"

PCA NO.	CONTRACT NO.	FILE LOCATION

SHEET	OF
731	736

DRAWING NO. XC21224
REVISION 2

ccheuk Jul 03, 2018 - 11:57am J:\Project14\WMH170673\04-CAD\Signal\XC21224.dwg

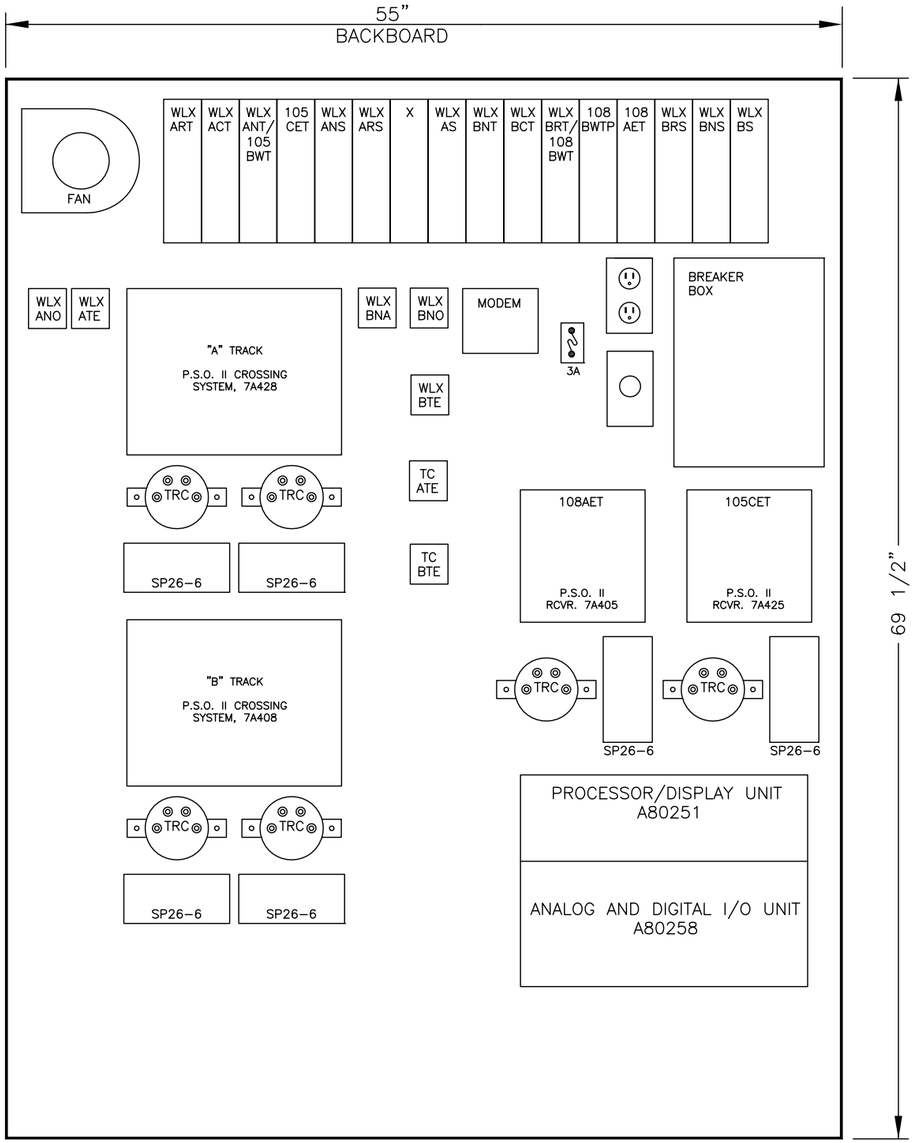

FRONT

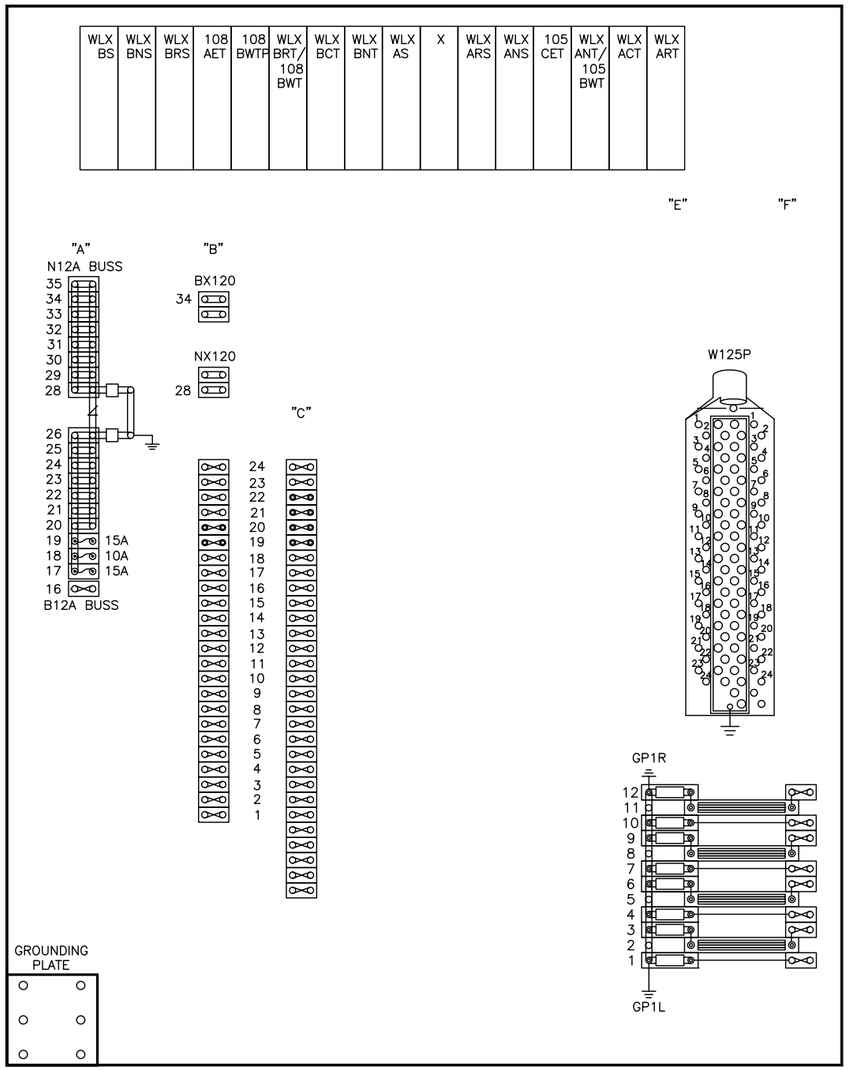

BACK

NO.	DATE	REVISIONS
OP3	06-29-07	REVISED FOR INNOVATION WAY NAME
OP2	07-03-04	REVISED FOR TRAFFIC PRE-EMPTION CIRCUITS
OP1	11-05-01	AS INSTALLED PER MOFFETT PARK CHANGES
OP0	10-24-00	AS-BUILT - ISSUED FOR RECORD DRAWINGS

REGISTERED PROFESSIONAL ENGINEER — No. E 21083 — EXP 03-31-19 — ELECTRICAL — STATE OF CALIFORNIA

SUBMITTED
SOUTH BAY SIGNAL, LLC
911 Lakeville Street, #354
Petaluma, CA 94952
www.SouthBaySignal.com

RSE, INC.
1075 Old County Road
Belmont, CA 94002
www.rseinc.com

DESIGNED	CHECKED
T. RYAN	Q. HO
DRAWN	CAD FILE NAME
T. RYAN	XC21225

Santa Clara Valley Transportation Authority
Solutions that move you

APPROVED
WMH Corporation, Inc.
50 West San Fernando Street, Suite 950
San Jose, CA 95113-2412
Tel (408) 971-7300
Fax (408) 971-7400

CAD FILE DATE	SCALE
05-04-18	NONE
SUBMITTAL DATE	APPROVAL DATE
05-04-18	6-20-18

GRADE CROSSING INNOVATION WY (WEST) SIGNAL EQUIPMENT LAYOUT CASE "A"

PCA NO.	CONTRACT NO.	FILE LOCATION

SHEET 732 OF 736
DRAWING NO. XC21225
REVISION 3

ccheuk Jul 03, 2018 - 11:56am J:\Project14\WMH170673\04-CAD\Signal\XC21225.dwg

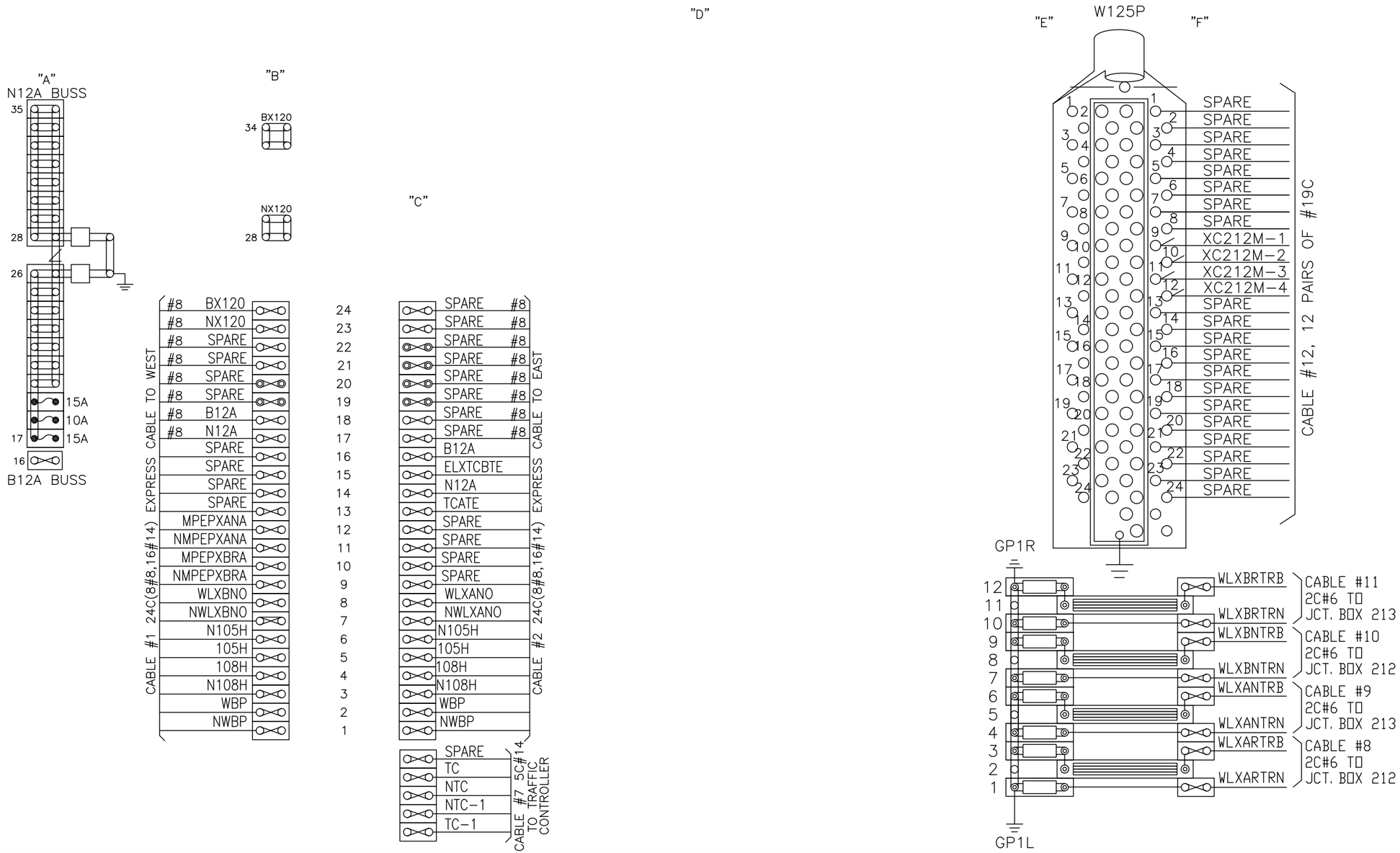

NO.	DATE	REVISIONS
OP4	06-29-07	REVISED FOR INNOVATION WAY NAME
OP3	09-02-04	REVISED MPEPXANA AND MPEPXBRA CIRCUITS
OP2	07-03-04	REVISED FOR TRAFFIC PRE-EMPTION CIRCUITS
OP1	11-05-01	AS INSTALLED PER MOFFETT PARK CHANGES
OP0	10-24-00	AS-BUILT - ISSUED FOR RECORD DRAWINGS

REGISTERED PROFESSIONAL ENGINEER JOHN PHUOC TRAN No. E 21083 EXP. 03-31-19 ELECTRICAL STATE OF CALIFORNIA

SUBMITTED
SOUTH BAY SIGNAL, LLC
911 LAKEVILLE STREET, #354
PETALUMA, CA 94952
WWW.SOUTHBAYSIGNAL.COM

RSE, INC.
1075 OLD COUNTY ROAD
BELMONT, CA 94002
WWW.RSEINC.COM

DESIGNED	CHECKED
T. RYAN	Q. HO
DRAWN	CAD FILE NAME
T. RYAN	XC21226

Santa Clara Valley Transportation Authority
Solutions that move you

APPROVED
WMH Corporation, Inc.
50 West San Fernando Street, Suite 950
San Jose, CA 95113-2412
Tel (408) 971-7300
Fax (408) 971-7400

CAD FILE DATE	SCALE
05-04-18	NONE
SUBMITTAL DATE	APPROVAL DATE 6-20-18
05-04-18	

GRADE CROSSING INNOVATION WY (WEST) SIGNAL TERMINAL BOARD "A"

PCA NO.	CONTRACT NO.	FILE LOCATION

SHEET 733 OF 736
DRAWING NO. XC21226
REVISION 4

Jul 03, 2018 - 11:55am J:\Project14\WMH170673\04-CAD\Signal\XC21226.dwg
ccheuk

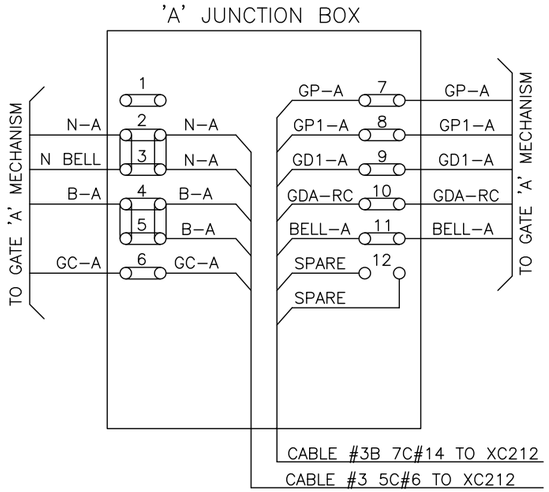

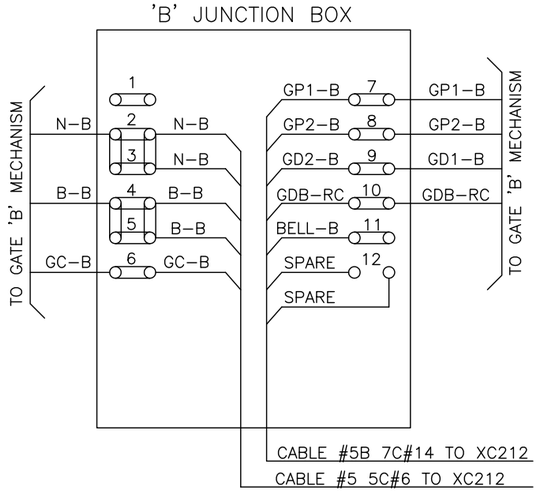

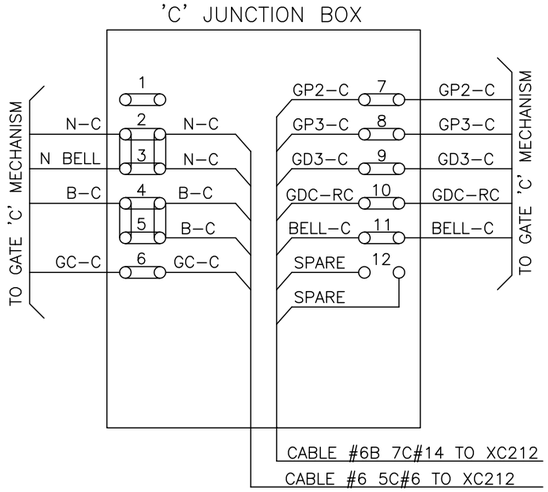

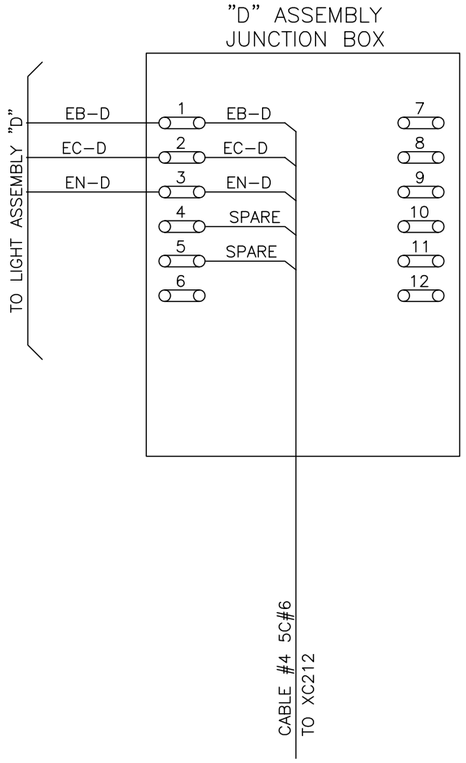

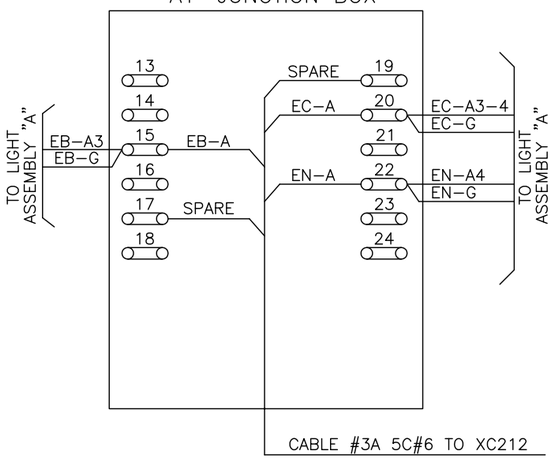

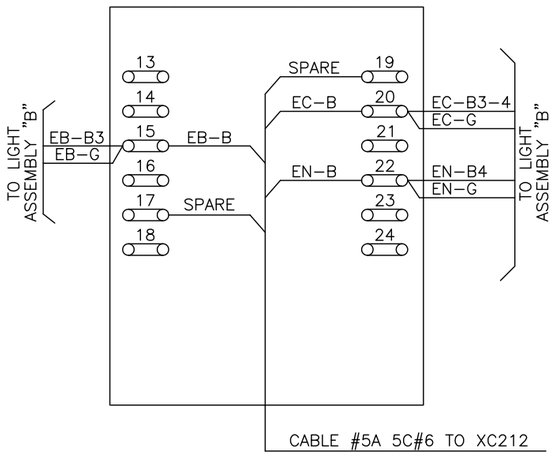

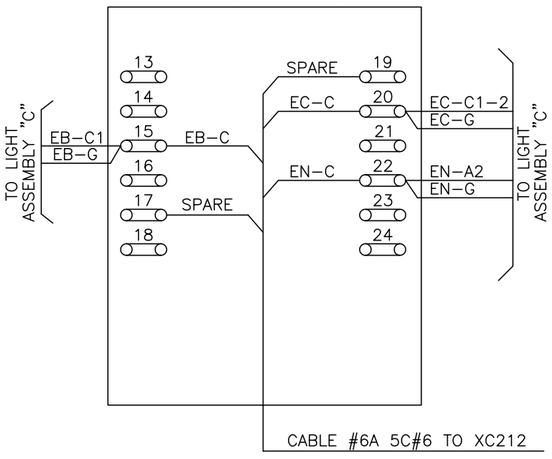

NO.	DATE	REVISIONS
OP2	05-04-18	100% SUBMITTAL
OP1	06-29-07	REVISED FOR INNOVATION WAY NAME
OP0	10-24-00	AS-BUILT - ISSUED FOR RECORD DRAWINGS

REGISTERED PROFESSIONAL ENGINEER — JOHNNY PHUOC HO — No. E 21083 — EXP 03-31-19 — ELECTRICAL — STATE OF CALIFORNIA

SUBMITTED
SOUTH BAY SIGNAL, LLC
911 LAKEVILLE STREET, #354
PETALUMA, CA 94952
WWW.SOUTHBAYSIGNAL.COM

RSE, INC.
1075 OLD COUNTY ROAD
BELMONT, CA 94002
WWW.RSEINC.COM

DESIGNED	CHECKED
T. RYAN	Q. HO
DRAWN	CAD FILE NAME
T. RYAN	XC21227

Santa Clara Valley Transportation Authority
Solutions that move you

APPROVED
WMH Corporation, Inc.
50 West San Fernando Street, Suite 950
San Jose, CA 95113-2412
Tel (408) 971-7300
Fax (408) 971-7400

CAD FILE DATE	SCALE
05-04-18	NONE
SUBMITTAL DATE	APPROVAL DATE 6-20-18
05-04-18	

GRADE CROSSING INNOVATION WY (WEST) SIGNAL JUNCTION BOX DETAIL (I)

SHEET	OF
734	736

DRAWING NO. XC21227
REVISION 2

PCA NO. | CONTRACT NO. | FILE LOCATION

Jul 03, 2018 – 11:54am J:\Project14\WMH170673\04-CAD\Signal\XC21227.dwg
ccheuk

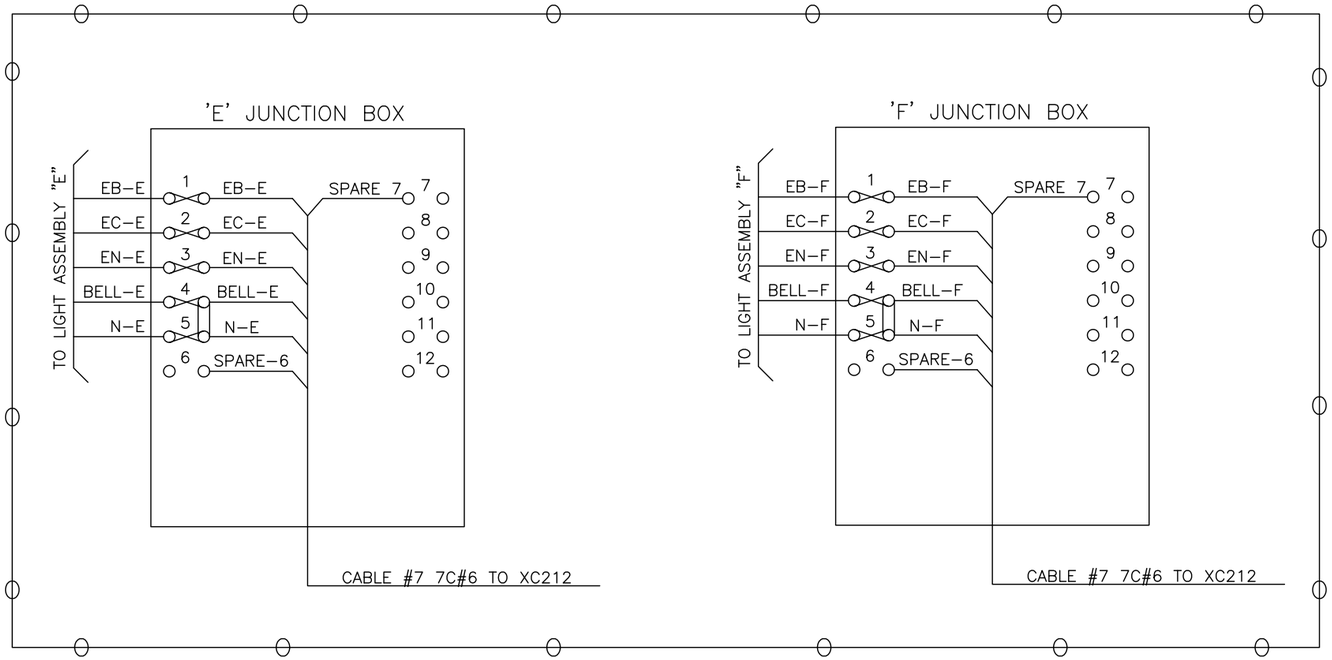

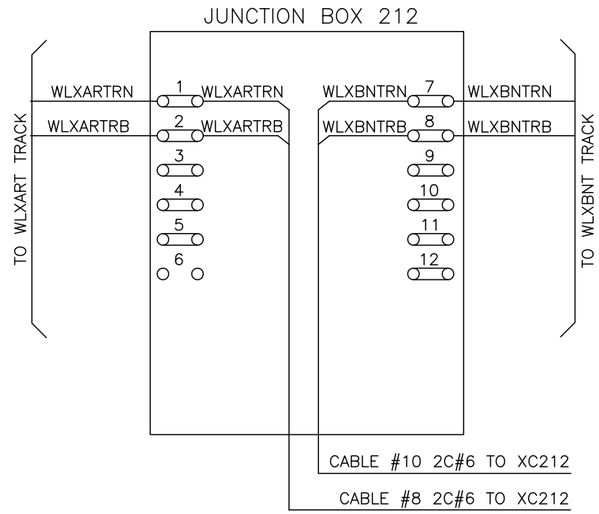

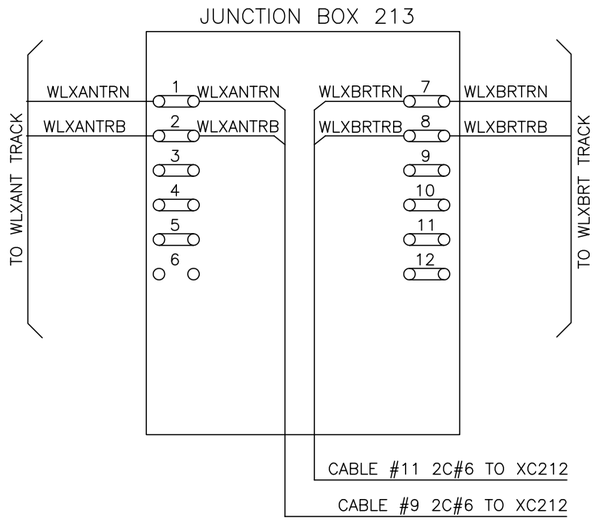

⊖⊖⊖ = IN
✕✕✕ = OUT

NO.	DATE	REVISIONS
OP2	05-04-18	100% SUBMITTAL
OP1	06-29-07	REVISED FOR INNOVATION WAY NAME
OP0	10-24-00	AS-BUILT - ISSUED FOR RECORD DRAWINGS

REGISTERED PROFESSIONAL ENGINEER — JOHN PHUOC HO — No. E 21083 — EXP 03-31-19 — ELECTRICAL — STATE OF CALIFORNIA

SUBMITTED
SOUTH BAY SIGNAL, LLC
911 LAKEVILLE STREET, #354
PETALUMA, CA 94952
WWW.SOUTHBAYSIGNAL.COM

RSE, INC.
1075 OLD COUNTY ROAD
BELMONT, CA 94002
WWW.RSEINC.COM

DESIGNED	CHECKED
T. RYAN	Q. HO
DRAWN	CAD FILE NAME
T. RYAN	XC21228

Santa Clara Valley Transportation Authority
Solutions that move you

APPROVED
WMH Corporation, Inc.
50 West San Fernando Street, Suite 950
San Jose, CA 95113-2412
Tel (408) 971-7300
Fax (408) 971-7400

CAD FILE DATE	SCALE
05-04-18	NONE
SUBMITTAL DATE	APPROVAL DATE 6-20-18
05-04-18	

GRADE CROSSING INNOVATION WY (WEST)
SIGNAL
JUNCTION BOX DETAIL (II)

SHEET	735
OF	736
DRAWING NO.	XC21228
REVISION	2

PCA NO.	CONTRACT NO.	FILE LOCATION

Jul 03, 2018 – 11:54am J:\Project14\WMH170673\04-CAD\Signal\XC21228.dwg
ccheuk

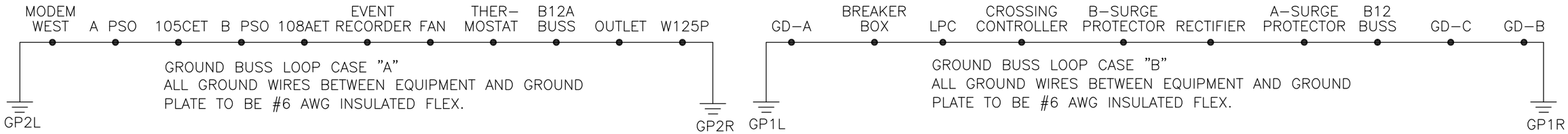

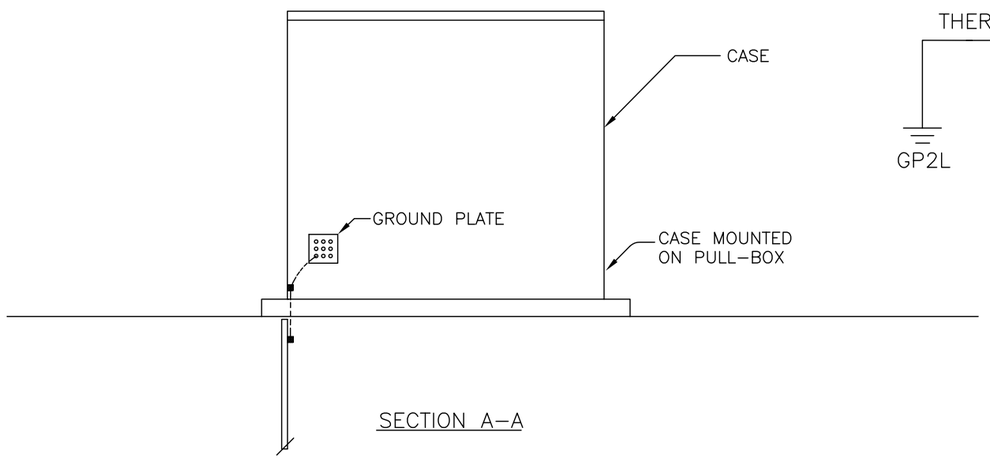

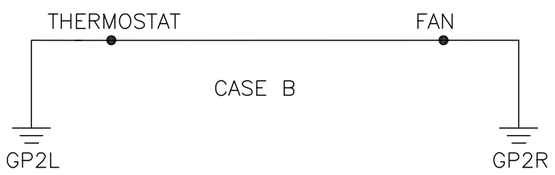

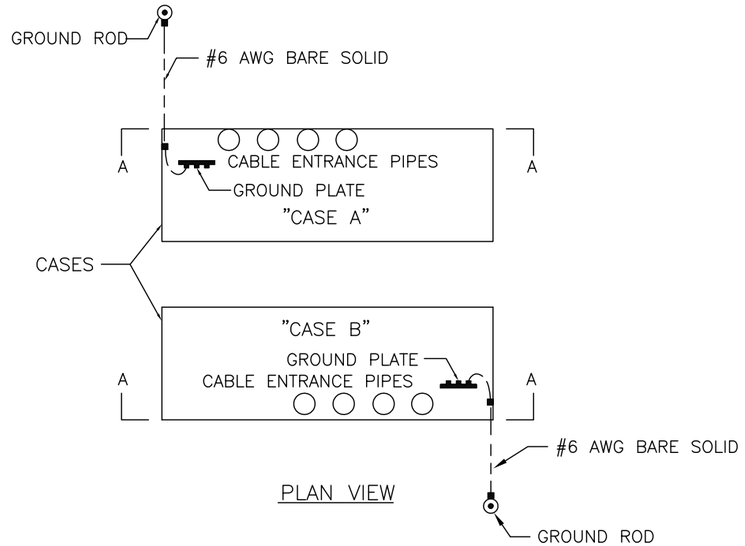

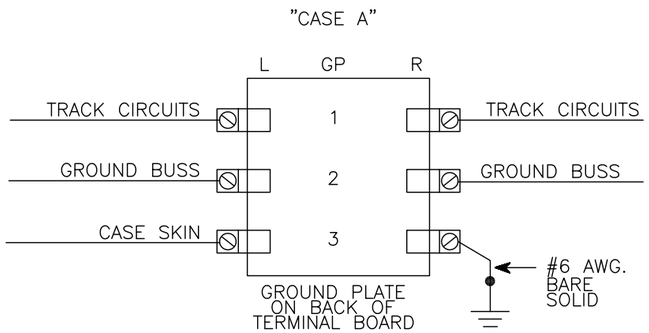

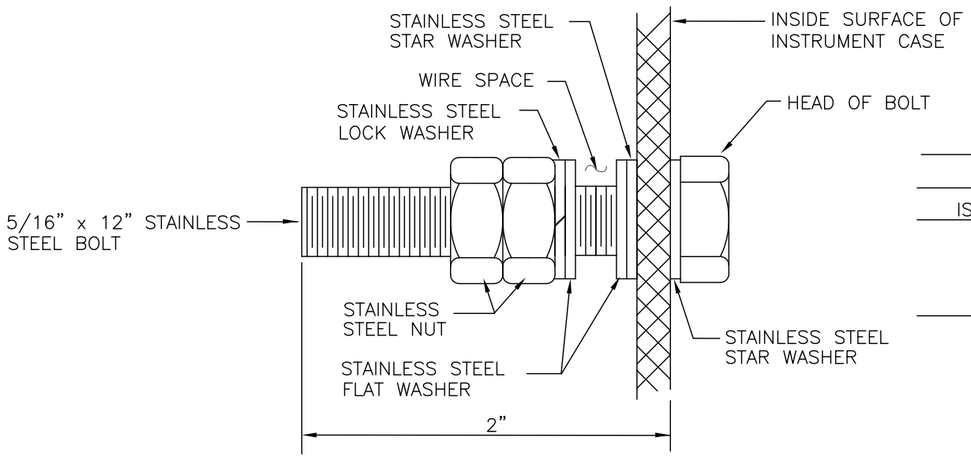

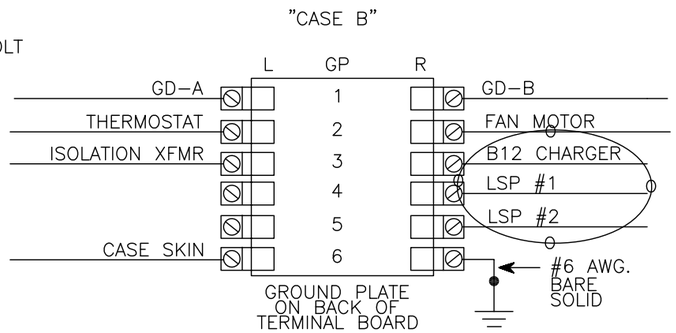

= IN
= OUT

NO.	DATE	REVISIONS
OP2	05-04-18	100% SUBMITTAL
OP1	06-29-07	REVISED FOR INNOVATION WAY NAME
OP0	10-24-00	AS-BUILT - ISSUED FOR RECORD DRAWINGS

REGISTERED PROFESSIONAL ENGINEER — JOHNNY PHUOC HO — No. E 21083 — EXP 03-31-19 — ELECTRICAL — STATE OF CALIFORNIA

SUBMITTED
SOUTH BAY SIGNAL, LLC
911 LAKEVILLE STREET, #354
PETALUMA, CA 94952
www.SouthBaySignal.com

RSE, INC.
1075 OLD COUNTY ROAD
BELMONT, CA 94002
www.rseinc.com

DESIGNED	CHECKED
T. RYAN	Q. HO
DRAWN	CAD FILE NAME
T. RYAN	XC21229

Santa Clara Valley Transportation Authority
Solutions that move you

APPROVED
WMH Corporation, Inc.
50 West San Fernando Street, Suite 950
San Jose, CA 95113-2412
Tel (408) 971-7300
Fax (408) 971-7400

CAD FILE DATE	SCALE
05-04-18	NONE
SUBMITTAL DATE	APPROVAL DATE 6-20-18
05-04-18	

GRADE CROSSING INNOVATION WY (WEST) SIGNAL CASE GROUNDING

PCA NO.	CONTRACT NO.	FILE LOCATION

SHEET 736
OF 736
DRAWING NO. XC21229
REVISION 2

ccheuk Jul 03, 2018 - 11:53am J:\Project14\WMH170673\04-CAD\Signal\XC21229.dwg